ABREVIATURAS Y SIMBOLOS

ABBREVIATIONS AND SYMBOLS

ABREVIATIONS ET SYMBOLES

1A	PRIMERA	1ST	FIRST	1ERE	PREMIERE
2A	SEGUNDA	2ND	SECOND	2ND	DEUXIEME
3A	TERCERA	3TH	THIRDTH	3EME	TROISIEME
4A	CUARTA	4TH	FOURTH	4EME	CUATRIEME
5A	QUINTA	5TH	FIFTH	5EME	CINQUIEME
4c	4 CILINDROS	4c	4 CYLINDERS	4c	4 CYLINDRES
6c	6 CILINDROS	6c	6CYLINDERS	6c	6 CYLINDRES
2,5DC	SANTANA 2,5 DIESEL CORTO	2,5DC	SANTANA 2,5 DIESEL COURT	2,5DC	SANTANA 2,5 DIESEL SHORT
2,5DL	SANTANA 2,5 DIESEL LARGO	2,5DL	SANTANA 2,5 DIESEL LONG	2,5DL	SANTANA 2,5 DIESEL LONG
2,5DE	SANTANA 2,5 DIESEL ESPECIAL	2,5DE	SANTANA 2,5 DIESEL SPECIAL	2,5DE	SANTANA 2,5 DIESEL SPECIAL
3,5DL	SANTANA 3,5 DIESEL LARGO	3,5DL	SANTANA 3,5 DIESEL LONG	3,5DL	SANTANA 3,5 DIESEL LONG
2500DC	SANTANA 2500 DIESEL CORTO	2500DC	SANTANA 2500 DIESEL COURT	2500DC	SANTANA 2500 DIESEL SHORT
2500DL	SANTANA 2500 DIESEL LARGO	2500DL	SANTANA 2500 DIESEL LONG	2500DL	SANTANA 2500 DIESEL LONG
3500DL	SANTANA 3500 DIESEL LARGO	3500DL	SANTANA 3500 DIESEL LONG	3500DL	SANTANA 3500 DIESEL LONG
C.S	CONJUNTO SERVICIO	S.A.	SERVICE ASSEMBLY	E.S.	ENSEMBLE DE SERVICE
D	DIESEL	D	DIESEL	D	DIESEL
DH	DIRECCION HIDRAULICA	HS	HIDRAULIC STEEERING	DH	DIRECTION HYDRAULIQUE
DHI	DIRECCION HIDRAUL.INTEGRAL	I.H.S.	INTEGRAL HIDRAULIC STEERING	D.H.I.	DIRECTION HYDRAULIQUE INTEGRAL
ESP	ESPECIAL	SPE	SPECIAL	SPE	SPECIAL
F.U.	FUERA DE USO	O.	OBSOLETE	O.	OBSOLETE
G	GASOLINA	P	PETROL	E	ESSENCE
LD	LADO DERECHO	RH	RIGHT HAND	CD	COTE DROIT
LI	LADO IZQUIERDO	LH	LEFT HAND	CG	COTE GAUCHE
M	METRICO	M	METRIC	M	METRIQUE
MA	MARCHA ATRAS	SR	SPEED REAR	MA	MARCHE ARRIERE
USE	USAR	USE	TO USE	USE	USER
W	WHITWORTH	W	WHITWORTH	W	WHITWORTH

EMPLAZAMIENTO DE PIEZAS

LOCATION OF DETAILS

EMPLACEMENT DE PIECES

1

CONJUNTO DE PIEZAS

PARTS ASSEMBLY

ENSEMBLE DE PIECES

INSTRUCCIONES DE MANEJO DEL CATALOGO

Esta publicación está dividida en 19 grupos, cuyo contenido se especifica en el indice de la contraportada. Cada grupo a su vez está dividido en subgrupos y su localización facilitada por el Indice Gráfico General.

Periódicamente se enviarán hojas intercambiables con un indice para mantener el catálogo con un grado de actualización óptimo.

En algunas referencias está indicado, en la columna de derecha, los datos de la fecha o el número de chásis, motor y caja de cambios, hasta (H) o desde (D) donde se montan las piezas correspondientes. También si la pieza está FUERA DE USO , es use o conjunto de servicio.

INSTRUCTIONS ABOUT THE CATALOGUE OPERATION

This publication is divided into 19 groups, which content is specified in the index of the first page. Each group in turn is divided into subgroups and their location is facilitated by the General Graphic Index.

Changeable sheets will be sent periodically with an index to maintain the catalogue in an optimum up-dating state.

The data or numbers of chassis, engine, gearbox until (H) or from (D) where to mount the correspondant pieces, are indicated in some parts number in the right column, as well as if the parts are out-of-use, used or are a service unit.

INSTRUCTIONS D'UTILISATION DU CATALOGUE

Cette publication est divisée en 19 groupes dont le contenu est spécifié par l'index de la page de couverture. Les groupes sont divisés en sous-groupes et leur localisation est facilitée par l'index qui précède chaque groupe.

Périodiquement, vous recevrez quelques feuilles interchangeables qui vous aideront à maintenir actualisé ce catalogue.

En regard de certaines références, il est indiqué à droite, la date ou le numéro de châssis, moteur et boîte de vitesses, depuis (D) ou jusqu'à (H) où monter les pièces correspondantes, ainsi que la circonstance (hors d'usage, en usage ou bien s'il s'agit d'un ensemble service).

NUMERACION DE CHASIS / CHASIS NUMBERS / NUMERATION DE CHASIS

CODIGO VIN / CODE VIN	VEHICULO / VEHICLE / VEHICULE
VSELBAAL2AZ.....	2,5 DC
VSELBCAL2AZ.....	2,5 DL
VSELBHML2AZ.....	2,5 DE
VSELB	3,5 DL
VSELBABL8AZ.....	2.500 DC
VSELBCML8AZ.....	2.500 DL
VSELBCMS8AZ.....	3.500 DL
VSELBYAL2AZ.....	119 D

NUMERACION DE MOTORES, ENGINES NUMBER, NUMERATION DE MOTEURS

CODIGO, CODE	MOTOR, ENGINE, MOTEUR
E-74.....	2,5 L.D
E-27.....	3,5 L.D

NUMERACION DE CAJAS DE CAMBIO, GEAR BOX NUMBER, NUMERATION DE BOITES DE VITESSES

CODIGO, CODE	CAJA DE CAMBIO, GEAR BOX, BOITE DE VITESSES
E-52.....	Rover (4 velocidades, speeds, vitesses).
E-42.....	SANTANA (reforzada, reinforcement, reforcee)
E-71.....	LT-85 (5 velocidades, speeds, vitesses)
E-72.....	LT-85 (5 velocidades, speeds, vitesses) recambios, spare parts, rechange
E-73.....	LT-230R. recambios, spare parts, rechange

NUMERACION DE EJES, SHAFTS NUMBER, NUMERATION DE AXES

CODIGO, CODE	EJE, SHAFT, AXE
E-41.....	Trasero, rear, arriere 2,5 DC - 2500 DC
E-81.....	Trasero, rear, arriere 2,5 DL - 2,5 DE - 2500 DL
E-84.....	Delantero, front, avant 2,5 DC - 2,5 DL - 2,5 DE - 2500 DC - 2500 DL - 119 D
E-85.....	Delantero, front, avant, 3500 DL
E-89.....	Trasero, rear, arriere 3500 DL

INDICE DE GRUPOS
GROUPS INDEX
INDEX PAR GROUPES

1 16	MOTOR ENGINE MOTEUR	1
17 28	ENGRASE LUBRICATION GRAISSAGE	2
29 36	REFRIGERACION COOLING REFROIDISSEMENT	3
37 57	SISTEMA ALIMENTACION FUEL SYSTEM SYSTEME ALIMENTATION	4
58 73	SISTEMA ELECTRICO ELECTRICAL SYSTEM SYSTEME ELECTRIQUE	5
74 77	EMBRAGUE CLUTCH EMBRAYAGE	6
78 102	CAJA DE VELOCIDADES GEAR BOX BOITE DE VITESSES	7
103 113	CAJA DE TRANSFERENCIAS TRANSFER CASING BOITE DE TRANSFERT	8
114 129	EJES DE RUEDA SHAFTS OF WHEEL AXE DE ROUE	9
130 139	DIRECCION STEERING COLUMN DIRECTION	10
140 153	FRENOS BRAKES FREINS	11
154 157	PANEL DE INSTRUMENTOS INSTRUMENT PANEL PANNEAUX ET INDICATEUR	12
158 172	BASTIDOR Y SUSPENSION FRAME AND SUSPENSION CHASSIS ET SUSPENSION	13
173 236	CARROCERIA BODY CARROSSERIE	14
237 246	TAPICERIA TRIM GARNITURE	15
247 251	ACCESORIOS ACCESSORIES ACCESSOIRES	16
252 253	HERRAMIENTAS TOOL OUTILS	17
254	EXTRAS EXTRAS EXTRAS	18
	JUEGOS DE REPARACION REPAIR KIT JEU DE REPARATION	19

LAND-ROVER SANTANA CATALOGO SANTANA

CATALOGO DE RECAMBIOS.....PARTS CATALOGUE.....CATALOGUE DE PIECES DETACHEES

COMPOSICION*****COMPOSITION*****COMPOSICION

REFERENCIA PARTNUMBER NUM.PIECE	DENOMINACION	DESCRIPTION	DENOMINATION	GRUPO GROUP GROUP
290001	MOTOR	ENGINE	MOTEUR	01
290002	ENGRASE	LUBRICATION	GRAISSAGE	02
290003	REFRIGERACION	COOLINS	REFROIDISSEMENT	03
290004	SISTEMA DE ALIMENTA	FUEL SYSTEM	SYSTEMA D ALIMENTAT	04
290005	SISTEMA ELECTRICO	ELECTRICAL SYSTEM	SYSTEMA ELECTRIQUE	05
290006	EMBRAGUE	CLUTCH	EMBRAYAGE	06
290007	CAJA DE VELOCIDADES	GEAR BOX	BOITE DE VITESSES	07
290008	CAJA DE TRANSFERENC	TRANSFER CASING	BOITE DE TRANSFERT	08
290009	EJES DE RUEDA Y ARB	AXLES AND PROPELLER	ARBRE DE TRANSMISSI	09
290010	DIRECCION	STEERING COLUMN	DIRECTION	10
290011	FRENOS	BRAKES	FREINS	11
290012	PANEL DE INSTRUMENT	INSTRUMENT PANEL	PANNEAUX ET INDICAT	12
290013	BASTIDOR Y SUSPENSI	FRAME AND SUSPENSIO	CHASSIS ET SUSPENSI	13
290014	CARROCERIA	BUDY	CARROSSERIE	14
290015	TAPICERIA	TRIM	GARNITURE	15
290016	ACCESORIOS	ACCESORIES	ACCESOIRES	16
290017	HERRAMIENTAS	TOOL	CUTILS	17
290018	EXTRAS	EXTRAS	EXTRAS	18
290019	JUEGOS DE REPARACIO	REPAIR KIT	JEU DE REPARATION	19

PUBLICACION 790776 EDIC - 1

PUBLICACION N:790776 GRUPO=01 MOTOR SUBGRUPO=CIGUE/AL
EDICION N: 1 GROUP=01 ENGINE SUBGROUP=CRANKSMAFT
GROUPE=01 MOTEUR SUBGROUPE=VILEBREQUIN

N.FIG PLATE N.FIG	N.PIEZA PARTNUMBER N.PIECE	CAN QTY OUT	DENOMINACION	DESCRIPTION	DENOMINATION	OBSERVACIONES
1	118812	1	CIGUE/AL	CRAMKSHAFT	VILEBRAQUIN	
2	ERC4650	1	FIJA	DOWEL	TIGE	
3	08566	1	CASQUILLO	BUSH	BAGUE	
4	RTC2626	1	CONJ COJINETE	BEARING ASSY	ENSEMBLE COUSSINET	
5	ERC3593	2	SEMI-COJINETE BANCAD	HALF MAIN BEARING	DEMI COUSSINET	
6	ERC5304	8	SEMI-COJINETE BANCAD	HALF MAIN BEARING	DEMI COUSSINET	
7	535636	2	SEMI-COJINETE APOYO	HALF SUPPORT BEARING	DEMI COUSSINET D'APU	
	535637	2	SEMI-COJINETE 0'0025	HALF BEARING 0'0025	DEMI COUSSINET 0'0025	
	535638	2	SEMI-COJINETE 0'005	HALF BEARING 0'005	DEMI COUSSINET 0'005	
	535639	2	SEMI-COJINETE 0'0075	HALF BEARING 0'0075	DEMI COUSSINET 0'0075	
	535640	2	SEMI-COJINETE 0'0010	HALF BEARING 0'0010	DEMI COUSSINET 0'0010	
8	ERC9765	1	ENGRANAJE	GEAR	ENGRANAGE	
9	ETC4079	1	DEFLECTOR	OIL DEFLECTOR	DEFLECTEUR	
10	118715	1	POLEA 2 CANALES	PULLEY 2 GROOVES	POULIE 2 CANALES	
11	184285	1	TORNILLO	BOLT	BOULON	
12	235770	2	CHAVETA	KEY	CHAVETTE	

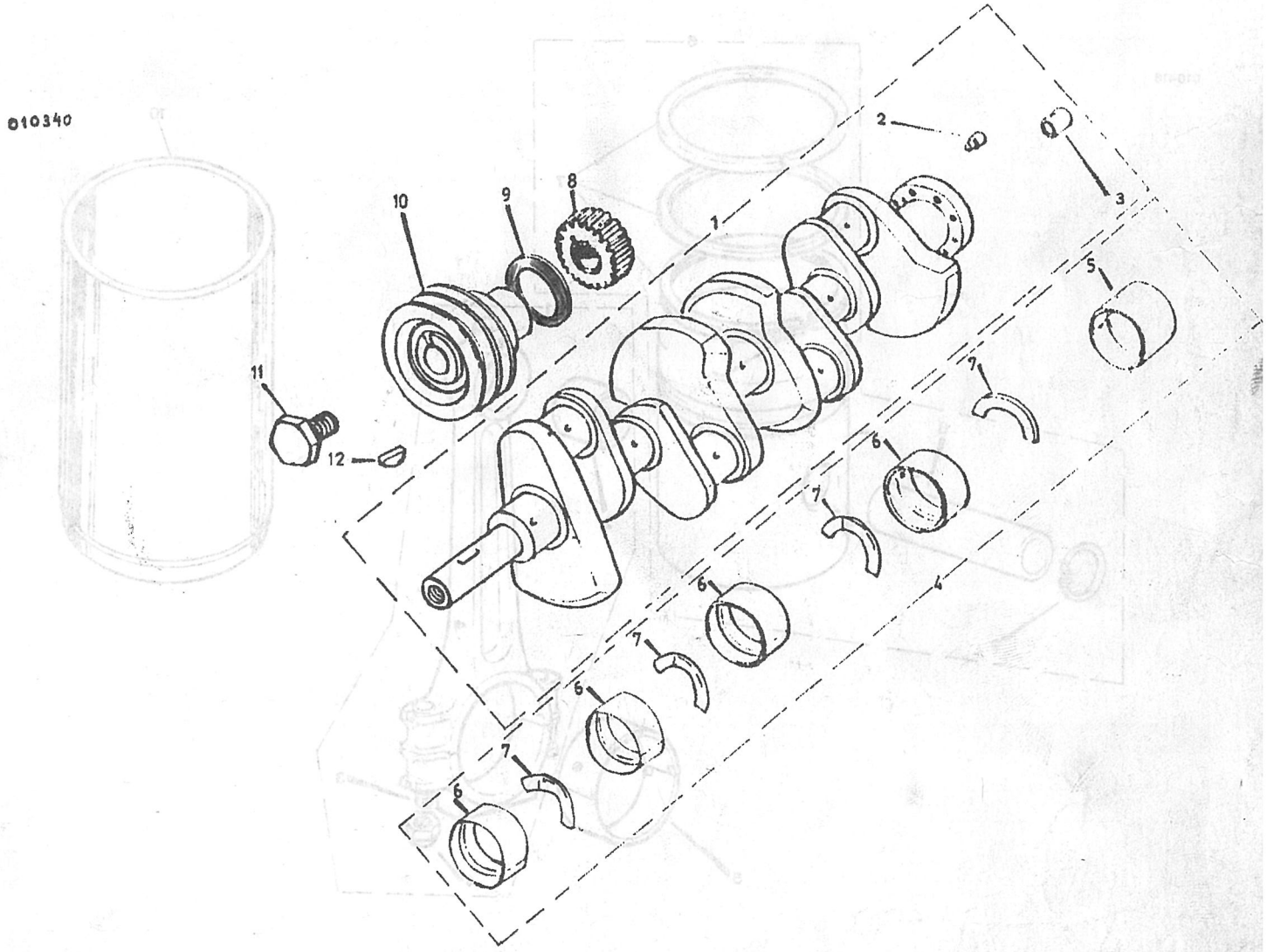

PUBLICACION N:790776 GRUPO=01 MOTOR SUBGRUPO=BIELA Y PISTON
EDICION N: 1 GROUP=01 ENGINE SUBGROUP=CYLINDER CONNECT
GROUPE=01 MOTEUR SUBGROUPE=BIELLE ET PISTON

N.FIG PLATE N.FIG	N.PIEZA PARTNUMBER N.PIECE	CAN QTY OUT	DENOMINACION	DESCRIPTION	DENOMINATION	OBSERVACIONES
1	527169	4	CONJ BIELA	CONNECTING ROD ASSY	ENS DE BIELETE	
2	247583	4	CASQUILLO	BUSH	BAGUE	
3	ERC8751	8	TORNILLO	BOLT	BOULON	
4	ETC5155	8	TUERCA	NUT	ECROU	
5	790777	1	CONJ.COJINETE STANDA	BEARING ASSY STANDAR	ENS COUSSINET STANDA	
	790778	1	CONJ.COJINETE 0'010	BEARING ASSY 0'010	ENS COUSSINET 0'010	
	790779	1	CONJ.COJINETE 0'020	BEARING ASSY 0'020	ENS COUSSINET 0'020	
6	118799-X	4	CONJ.PISTON"X"STANDA	PISTON ASSY"X"STANDA	ENS DE PISTON"X"STAN	
	118799-Y	4	CONJ.PISTON"Y"STANDA	PISTON ASSY"Y"STANDA	ENS DE PISTON"Y"STAN	
7	790201	4	JUEGO SEGMENTO NORMA	COMPRESSION RI STAND	JEU SEGMENT STANDAR	
8	113383	4	BULON	GUDGEON PIN	AXE DE PISTON	
9	266945	8	ANILLO	RING	ANNEAU	
10	527351E1	4	CAMISA	CYLINDER JACKET	CHEMISE DE CYLINDRE	

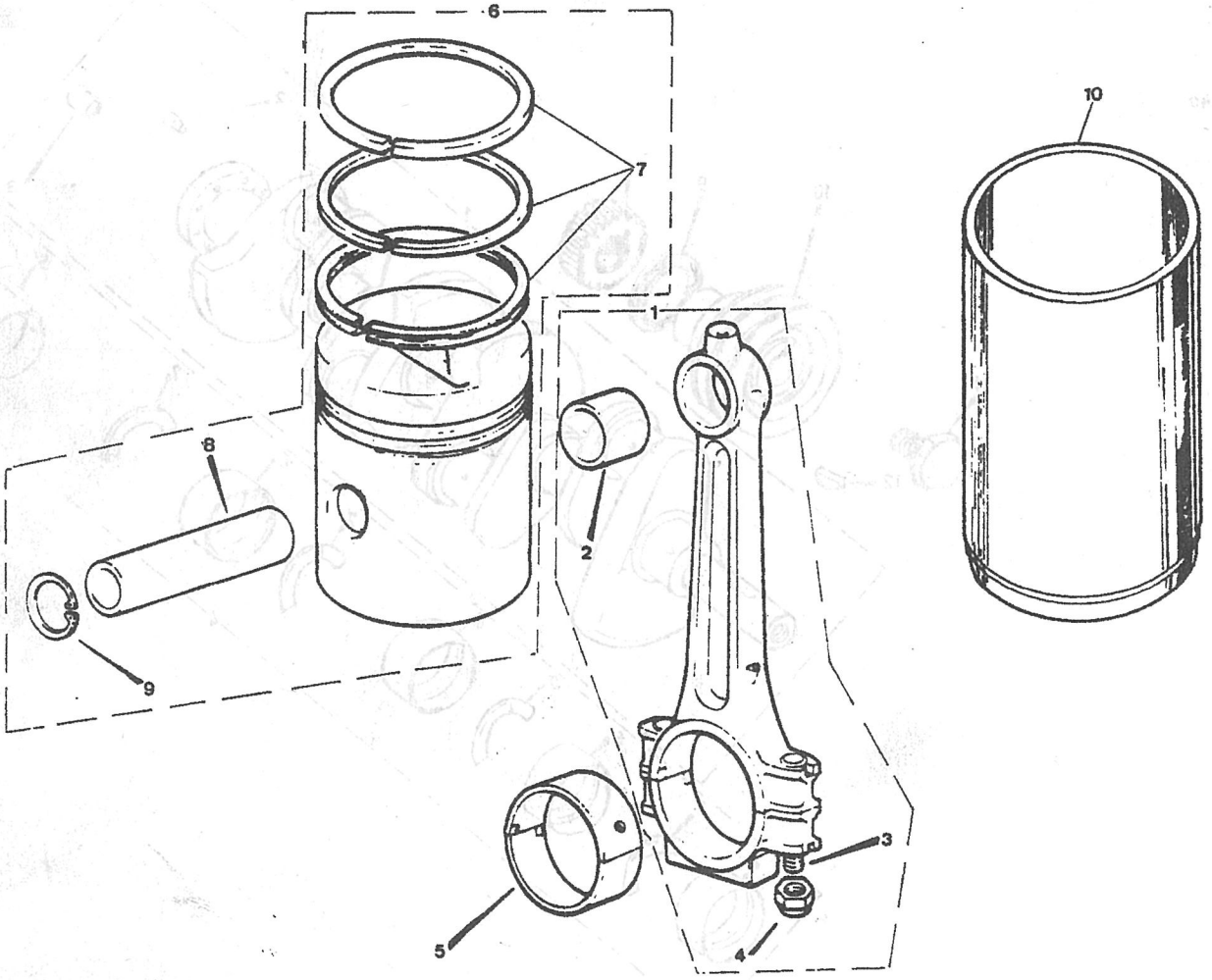

GRUPO 01 01 MOTOR

GROUP 01 01 ENGINE

GROUP 01 01 MOTEUR

COMPOSICION.....COMPOSITION.....COMPOSICION

REFERENCIA PARTNUMBER NUM.PIECE	DENOMINACION	DESCRIPTION	DENOMINATION
010142	CONJ MOTOR	ENGINE ASSY	ENS MOTEUR
010239	BLOQUE CILINDROS	CYLINDER BLOCK	BLOC CYLINDRES
010340	CIGUE/AL	CRANKSMAFT	VILEBREQUIN
010416	BIELA Y PISTON	CYLINDER CONNECT	BIELLE ET PISTON
010535	CULATA	CYLINDER HEAD	CULASSE
010613	ARBOL DE LEVAS	CAMSHAFT	ARBRE A CAMES
0107081	ARBOL DE BALANCINES	VALVE GEAR AND AXE	AXE DE CULBUTEUR
0108131	CADENA DISTRIBUCION	TENSIIONER MECHANICS	CHAINE DISTRIBUTION

PUBLICACION N:790776 GRUPO=01 MOTOR SUBGRUPO=CONJ MOTOR
EDICION N: 1 GROUP=01 ENGINE SUBGROUP=ENGINE ASSY
GROUPE=01 MOTEUR SUBGROUPE=ENS MOTEUR

N.FIG PLATE N.FIG	N.PIEZA PARTNUMBER N.PIECE	CAN QTY OUT	DENOMINACION	DESCRIPTION	DENOMINATION	OBSERVACIONES
1	118775	1	MOTOR 4C DIESEL DHI	DIESEL ENGINE 4C IHS	MOTEUR DIESEL 4C DHI	2500 DC-2500 DL
	ERC9476K1	1	MOTOR DIESEL 2'5	DIESEL ENGINE 2'5	MOTEUR DIESEL 2'5	BASICO DIREC.MEC.
	ERC9476K5	1	MOTOR DIESEL 2'5	DIESEL ENGINE 2'5	MOTEUR DIESEL 2'5	BASICO DIREC.HID.
	ERC9476K6	1	MOTOR DIESEL 2'5 E.	DIESEL ENGINE 2'5 E.	MOTEUR DIESEL 2'5 E.	ESPECIAL DIRE. HI.
2	118446	1	SOPORTE LD	SUPPORT RH	SUPPORT CD	
3	206938	1	SOPORTE LI	SUPPORT LH	SUPPORT CG	
4	SH112251	3	TORNILLO	BOLT	BOULON	
	SH112301	1	TORNILLO	BOLT	BOULON	
5	WL112001	4	ARANDELA MUELLE	WASHER-SPRING	RONDELLE ELASTIQUE	

010142

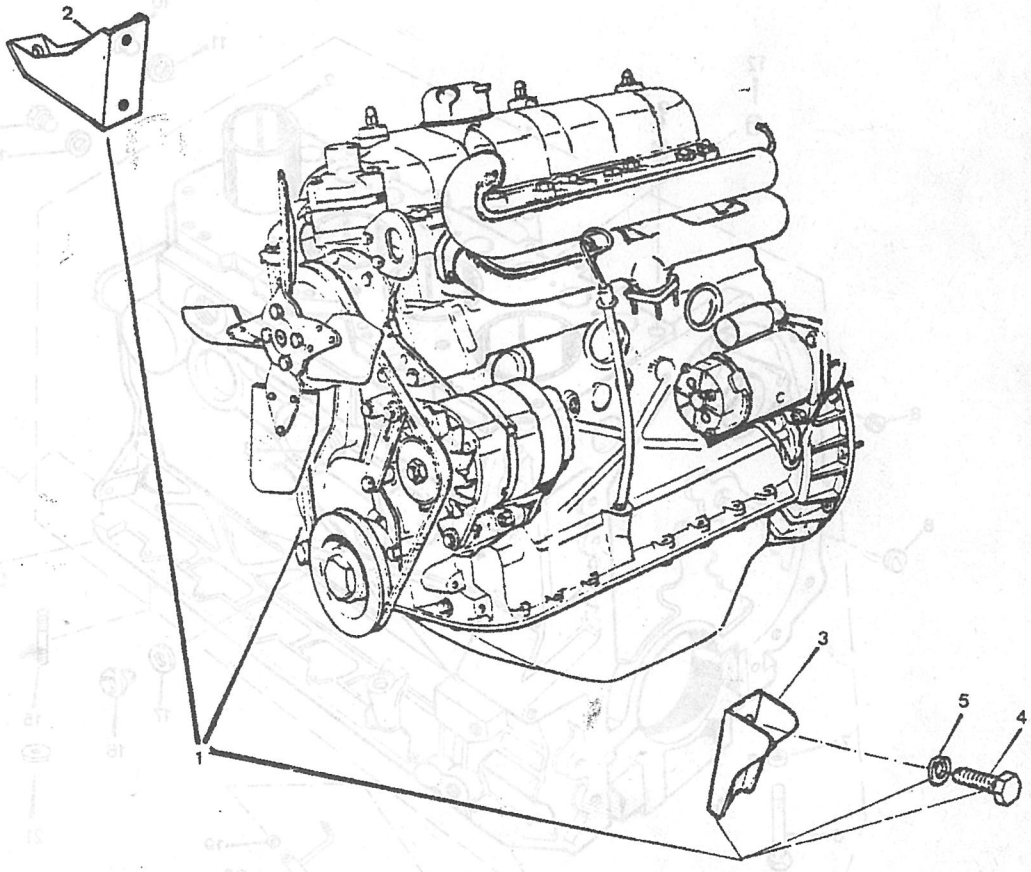

PUBLICACION N:790776 GRUPO=01 MOTOR SUBGRUPO=BLOQUE CILINDROS
EDICION N: 1 GROUP=01 ENGINE SUBGROUP=CYLINDER BLOCK
GROUPE=01 MOTEUR SUBGROUPE=BLOC CYLINDRES

N.FIG PLATE N.FIG	N.PIEZA PARTNUMBER N.PIECE	CAN QTY OUT	DENOMINACION	DESCRIPTION	DENOMINATION	OBSERVACIONES
1	ERC9769F1	1	BLOQUE DE CILINDROS	CYLINDER BLUCK	BLOC CILINDRES	
2	527351E1	4	CAMISA	CYLINDER JACKET	CHEMISE DE CYLINDRE	
3	597586	2	TAPON	CORE PLUG	BOUCHON	
4	ERC4996	6	TAPON	CORE PLUG	BOUCHON	
5	501593	10	FIJA	DOWEL	TIGE	
6	504007	10	TORNILLO	BOLT	BOULON	
7	504006	10	ARANDELA	WASHER	RONDELLE	
8	247127	2	TAPON	PLUG	BOUCHON	
9	247965	1	TAPON	PLUG	BOUCHON	
10	536577	2	TAPON	CORE PLUG	BOUCHON	
11	113580	2	ARANDELA	WASHER	RONDELLE	
12	09241-08003	3	TAPON	PLUG	BOUCHON	
13	ERC4644	2	FIJA	DOWEL	TIGE	
14	ERC5086	2	EMPAQUETADURA	PACKING	PRESSE	
15	TE108031	1	ESPARRAGO	STUD	GOUJON	
16	113635	1	TAPON	PLUG	BOUCHON	
17	AFU1882	1	ARANDELA	WASHER	RONDELLE	
18	ETC4049K1	4	TORNILLO	BOLT	BOULON	
19	273069	8	ARANDELA	WASHER	RONDELLE	
20	113048	4	INYECTOR	INJECTOR	INJECTEUR	
21	2920	1	ARANDELA	WASHER	RONDELLE	

010239

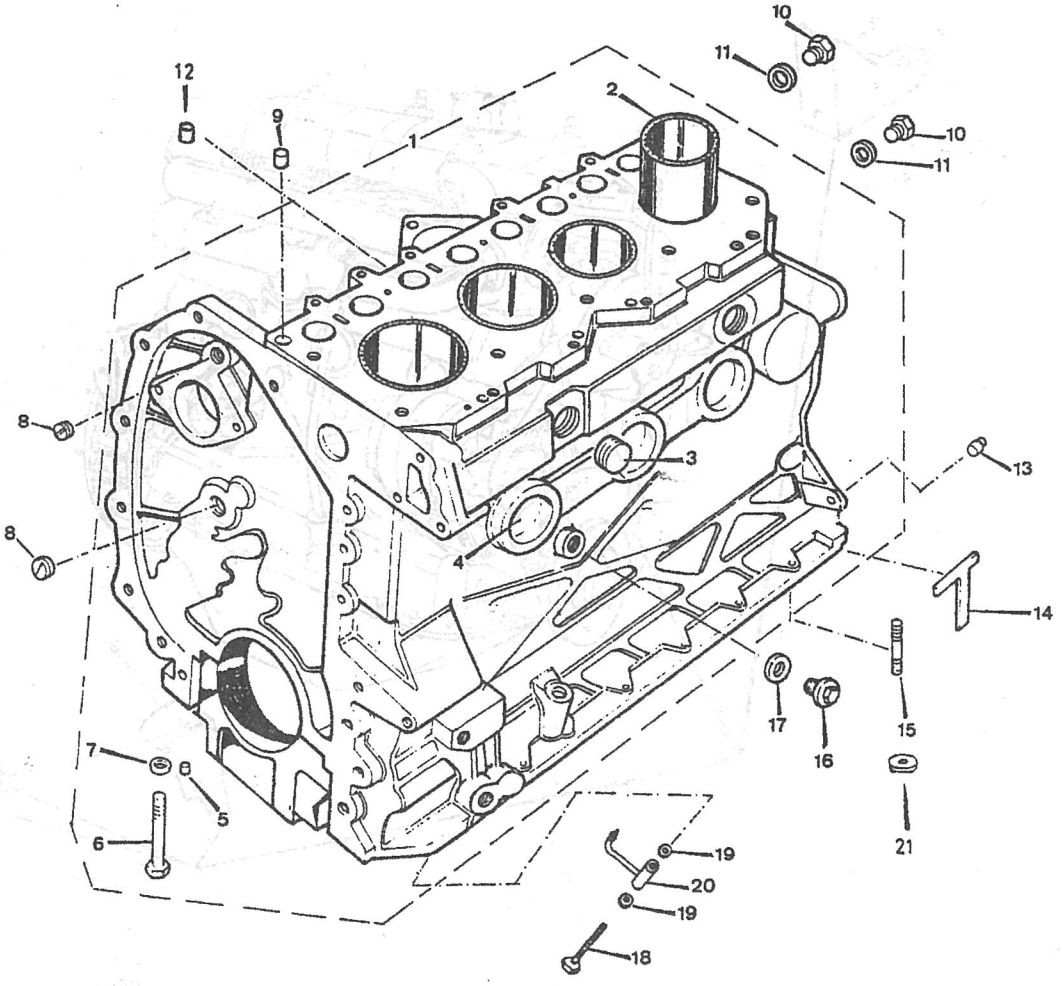

PUBLICACION N:790776 GRUPO=01 MOTOR SUBGRUPO=CULATA
EDICION N: 1 GROUP=01 ENGINE SUBGROUP=CYLINDER HEAD
GROUPE=01 MOTEUR SUBGROUPE=CULASSE

N.FIG PLATE N.FIG	N.PIEZA PARTNUMBER N.PIECE	CAN QTY OUT	DENOMINACION	DESCRIPTION	DENOMINATION	OBSERVACIONES
1	ETC4649K1	1	CONJ CULATA	CYLINDER HEAD ASSY	ENS DE CULASSE	
2	554725	4	GUIA DE ADMISION	GUIDE OF INLET	GUIDE DE ADMISION	
3	ERR1510	4	RETEN GUIA VAL.ADMIS	INTLET VAL.GUIDE SEA	RACLEUR GUIDE D'ADMI	
4	554726	4	GUIA DE ESCAPE	GUIDE OF EXHAUST	GUIDE D'ECHAPPEMENT	
5	ETC4751	4	RETEN GUIA VAL.ESCAP	OUTLER VAL.GUIDE SEA	RACLEUR GUIDE D'ECHA	
6	ERC9501	4	DEFLECTOR	SHROUD	DEFLECTEUR	
7	524765	1	TAPON COPA 35 MM	CORE PLUG 35 MM	BOUCHON COUPE 35 MM	
8	ERC8663	8	TUBO	TUB	TUYAU	
9	113476	4	TAPON CALIENTE	HOT PLUG	BOUCHON	
10	PA105101	4	FIJA	DOWEL	TIGE	
11	ERC9631	4	ASIENTO VALVULA ESCA	EXHAUST VALVE SEAT	SIEGE DE SOUPAPE ECH	
	ETC4643	4	ASIENTO VALVULA ADMI	INLET VALVE SEAT	SIEGE DE SOUPAPE ADM	
12	250830	4	TAPON 22 MM	PLUG 22 MM	BOUCHON 22 MM	
13	525497	7	TAPON COPA 24 MM	CORE PLUG 24 MM	BOUCHON COUPE 24 MM	
14	TE108071	8	ESPARRAGO	STUD	GOUJON	
15	TE108075	4	ESPARRAGO	STUD	GOUJON	
16	TE108055	5	ESPARRAGO	STUD	GOUJON	
17	247683	2	TORNILLO	BOLT	BOULON	
18	247051	9	TORNILLO	BOLT	BOULON	
19	247723	5	TORNILLO	BOLT	BOULON	
20	161510	1	TERMISTOR	THERMOSTAT SWITCH	ELEMENT DE TEMPERATU	
21	SH108201	4	TORNILLO	BOLT	BOULON	
22	ERC9432	1	ADAPTADOR	ADAPTOR	RACCORD	
23	185211	1	JUNTA	JOINT	JOINT	
24	WL108001	4	ARANDELA	WASHER	RONDELLE	
25	ERC6821	18	ARANDELA	WASHER	RONDELLE	
26	ERC2686	1	SOPORTE TRASERO	REAR BRACKET	SUPPORT ARRIERE	
27	275679	1	TUBERIA	OIL PIPE	TUYAUTERIE	
28	ETC4498	2	TORNILLO	BOLT	BOULON	
29	113581	4	ARANDELA	WASHER	RONDELLE	
30	518466	2	ESPARRAGO	STUD	GOUJON	
31	254824	2	TUERCA	NUT	ECROU	
32	ETC5301	1	JUNTA CULATA	JOINT CYLINDER HEAD	JOINT DE CULASSE	
33	ERC2254	1	SOPORTE DELANTERO	FRONT BRACKET	SUPPORT AVANT	
34	112614	2	TAPON 16 MM	PLUG 16 MM	BOUCHON 16 MM	

010535

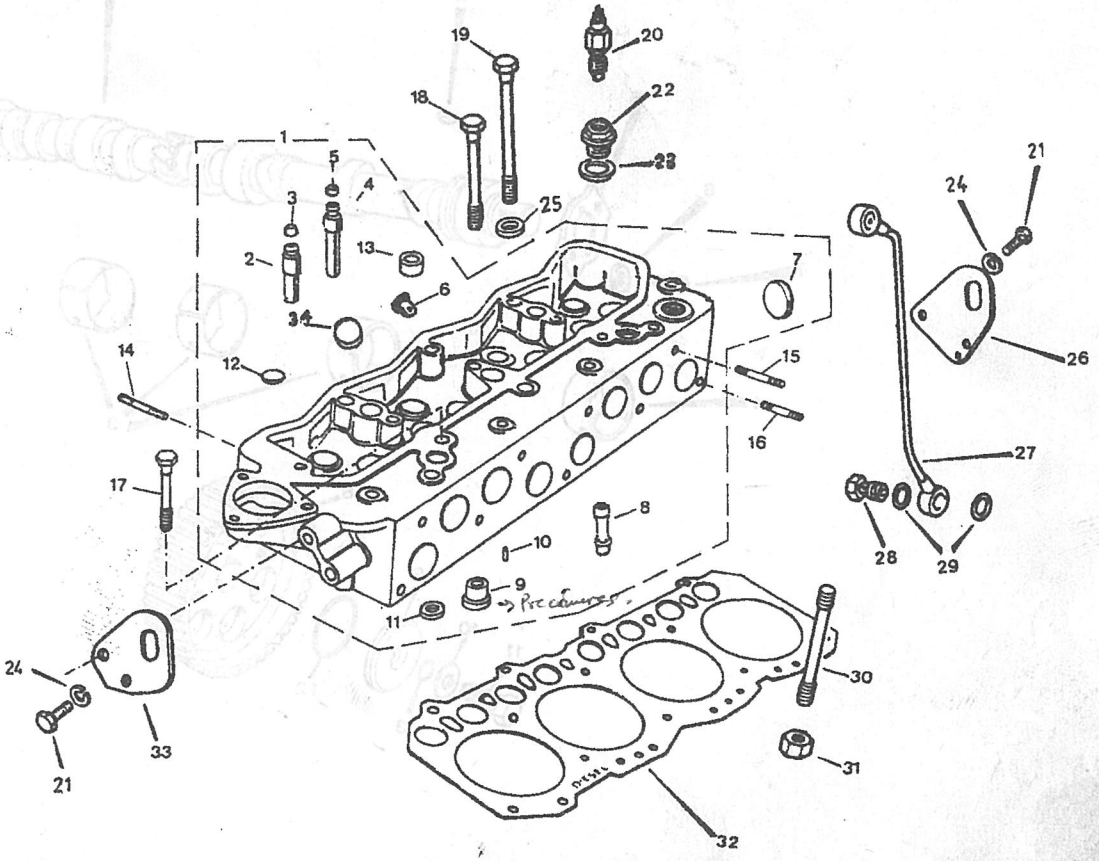

PUBLICACION N:790776 GRUPO=01 MOTOR SUBGRUPO=ARBOL DE LEVAS
EDICION N: 1 GROUP=01 ENGINE SUBGROUP=CAMSHAFT
GROUPE=01 MOTEUR SUBGROUPE=ARBRE A CAMES

N.FIG PLATE N.FIG	N.PIEZA PARTNUMBER N.PIECE	CAN QTY OUT	DENOMINACION	DESCRIPTION	DENOMINATION	OBSERVACIONES
1	ERC5475	1	ARBOL DE LEVAS	CAMSHAFT	ARBRE A CAMES	
2	230313	1	CHAVETA	KEY	CHAVETTE	
3	274233	3	COJINETE	BEARING	COUSSINET	
4	521582	1	COJINETE	BEARING	COUSSINET	
5	ERC1561	1	PLACA	PLATE	PLAQUE	
6	WL106001	2	ARANDELA	WASHER	RONDELLE	
7	SH106161	2	TORNILLO	BOLT	BOULON	
8	ETC4014	1	ENGRANAJE	GEAR	ENGRANAGE	
9	ERC8847	1	PLACA	PLATE	PLAQUE	
10	850621	1	ARANDELA PLANA	WASHER PLATE	RONDELLE PLANE	
11	ETC4080	1	TORNILLO	BOLT	BOULON	
12	ERC8849	1	ANILLO	RING	ANNEAU	
13	ETC4076	1	ANILLO	RING	ANNEAU	

010613

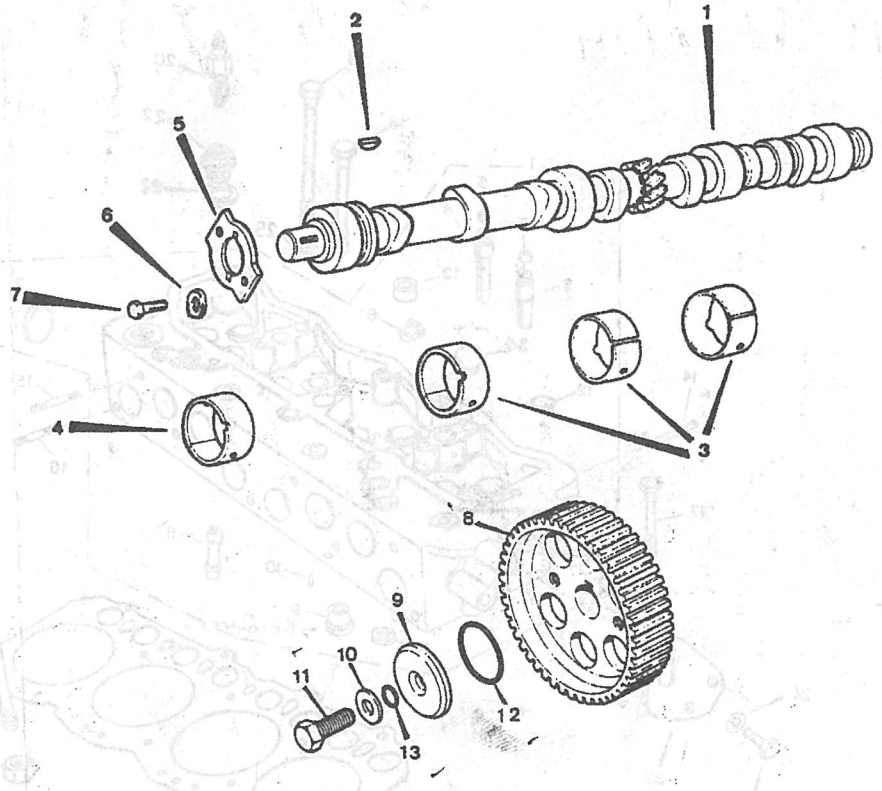

PUBLICACION N:790776
EDICION N: 1

GRUPO-01 MOTOR
GROUP-01 ENGINE
GROUPE-01 MOTEUR

SUBGRUPO-ARBOL DE BALANCINES
SUBGROUP-VALVE GEAR AND AXE
SUBGROUPE-AXE DE CULBUTEUR

N.FIG PLATE N.FIG	N.PIEZA PARTNUMBER N.PIECE	CAN QTY OUT	DENOMINACION	DESCRIPTION	DENOMINATION	OBSERVACIONES
1	ERC9739F1	4	VALVULA ADMISION	INLET VALVE	SOUPAPE ADMISION	
2	113253	4	VALVULA ESCAPE	EXHAUST VALVE	SOUPAPE ECHAPPEMENT	
3	568550	8	MUELLE	SPRING	RESSORT	
4	ETC4068	8	TAPA	COVER	COUVERCLE	
5	ETC4069	16	FIADOR	SPLIT CONE	ATTACHE	
6	507829	8	CONJ EMPUJADOR	TAPET ASSY	ENS POUSSOIR	
7	502473	8	GUIA	TAPPET GUIDE	GUIDE	
8	ERC1399	8	RODILLO	ROLLER	GALET	
9	ETC4246	8	TORNILLO	BOLT	BOULON	
10	273069	8	ARANDELA	WASHER	RONDELLE	
11	507026	8	TAQUE	TAPPET	PUSSOIR SOUPAPE	
12	546799	8	VARILLA	PUSH ROD	TRINGLE	
13	ERC6341	1	EJE	SHAFT	AXE	
14	ERC6337	2	TAPON	PLUG	BOUCHON	
15	113317	4	SOPORTE	SUPPORT	SUPPORT	
16	113240	1	SOPORTE TRASERO	REAR SUPPORT	SUPPORT ARRIERE	
17	TD108091	3	ESPARRAGO	STUD	GOUJON	
18	BH108111	5	TORNILLO	BOLT	BOULON	
19	ETC4460	1	TORNILLO	BOLT	BOULON	
20	118689	4	BALANCIN LI	ROCKER EXHAUST LH	CULBUTEUR ECHAPP CG	
21	118690	4	BALANCIN CL	ROCKER EXHAUST RH	CULBUTEUR ECHAPP CD	
22	113531	8	CASQUILLO	BUSH	BAGUE	
23	ERC9054	8	TORNILLO	BOLT	BOULON	
24	247040	4	MUELLE	PRING	RESSORT	
25	525389	6	ARANDELA	WASHER	RONDELLE	
26	NT108041	8	CONTRATUERCA	LOCKNUT	ECROU BLOCAGE	

0107081

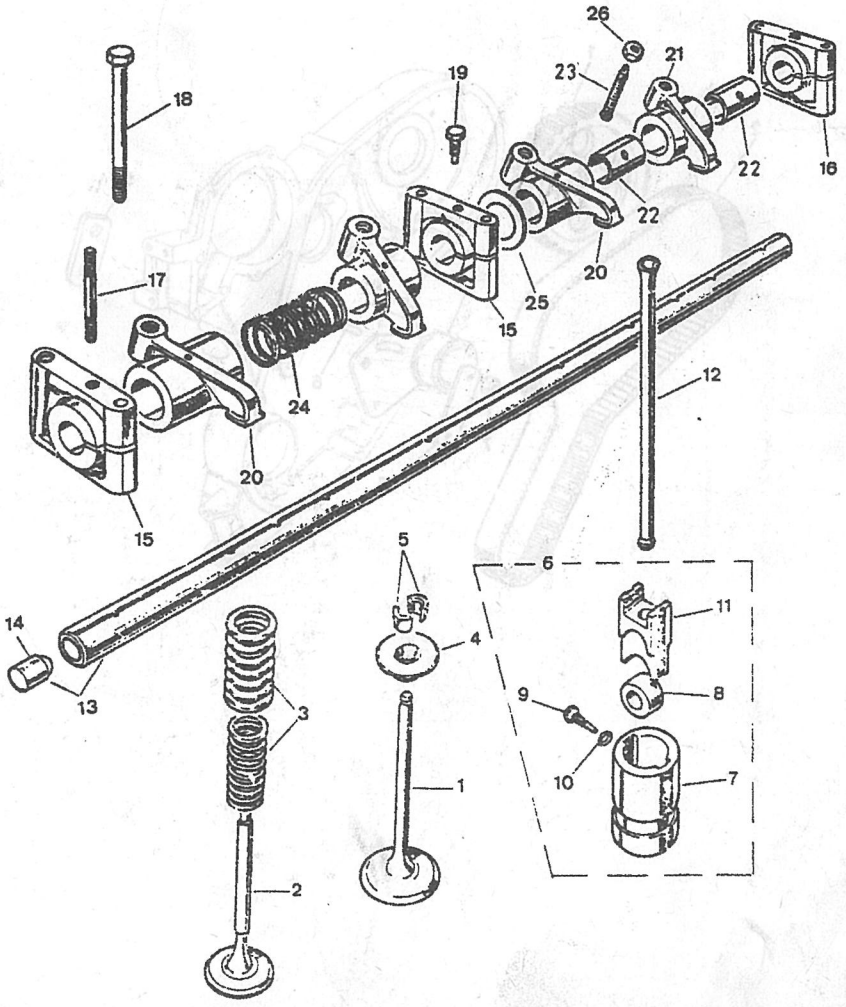

PUBLICACION N:790776
EDICION N: 1

GRUPO-01 MOTOR
GROUP-01 ENGINE
GROUPE-01 MOTEUR

SUBGRUPO-CADENA DISTRIBUCION
SUBGROUP-TENSIIONER MECHANICS
SUBGROUPE-CHAINE DISTRIBUTION

N.FIG PLATE N.FIG	N.PIEZA PARTNUMBER N.PIECE	CAN QTY OUT	DENOMINACION	DESCRIPTION	DENOMINATION	OBSERVACIONES
1	ETC5717	1	ENGRANAJE	GEAR	ENGRANAGE	
2	ETC7333	1	CORREA	BELT	COURROIE	
3	ERC8861	1	TENSOR	TENSIONER MECHANISM	TENDEUR	
4	113222	2	JUNTA	JOINT	JOINT	
5	ERC7768	1	TENSOR	ADJUSTING LINK	TENDEUR	
6	113610	2	ESPARRAGO	STUD	GOUJON	
7	NH108041	2	TUERCA	NUT	ECROU	

0108131

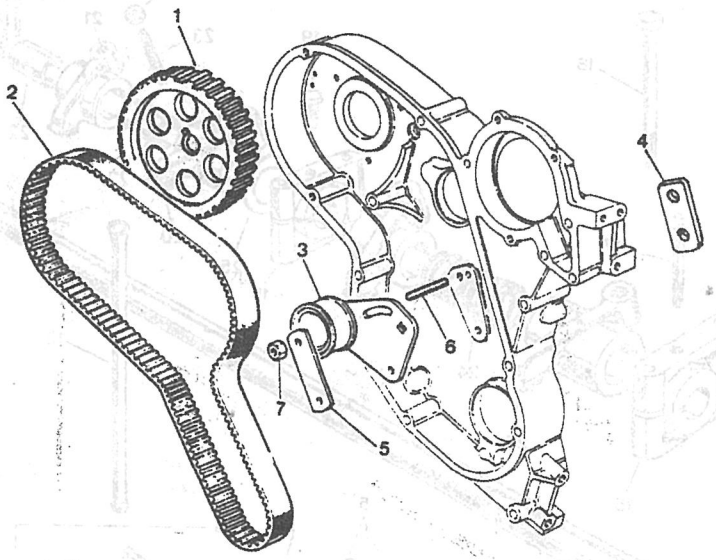

GRUPO 02 02 ENGRASE

GROUP 02 02 LUBRICATION

GROUP 02 02 GRAISSAGE

COMPOSICION.....COMPOSITION.....COMPOSICION

REFERENCIA PARTNUMBER NUM.PIECE	DENOMINACION	DESCRIPTION	DENOMINATION
0201061	BOMBA DE ACEITE	OIL PUMB	POMPE A HUILE
020220	FILTRO DE ACEITE	OIL FILTER	FILTRE DE HUILE
020319	TAPA DELANTERA	FRONT COVER	COUVERCLE AVANT
020417	TAPA DE BALANCINES	ROKER COVER	COUVERCLE CULBUTEUR
020518	TAPA LATERAL	SIDE COVER	COUVERCLE LATARALE
020604	CARTER DE ACEITE	CRANKCASE	CARTER

PUBLICACION N:790776 GRUPO=02 ENGRASE SUBGRUPO=BOMBA DE ACEITE
EDICION N: 1 GROUP=02 LUBRICATION SUBGROUP=OIL PUMB
GROUPE=02 GRAISSAGE SUBGROUPE=POMPE A HUILE

N.FIG PLATE N.FIG	N.PIEZA PARTNUMBER N.PIECE	CAN QTY OUT	DENOMINACION	DESCRIPTION	DENOMINATION	OBSERVACIONES
1	118658	1	BOMBA DE ACEITE	OIL PUMB	POMPE A HUILE	
2	113257	1	CUERPO BOMBA	PUMP HOUSING	CORP DE POMPE	
3	236257	1	FIJA	DOWEL	TIGE	
4	502209	1	EJE	SHAFT	AXE	
5	112527	1	PI\ON	PINION	PIGNON	
	ERC9706	1	PI\ON	PINION	PIGNON	
6	112528	1	PI\ON	PINION	PIGNON	
	ERR1088	1	PI\ON	PINION	PIGNON	
7	ETC4880	1	EMBOLO	PISTON	PISTON	
8	564456	1	MUELLE	SPRIG	RESSORT	
9	232044	1	ARANDELA PLANA	PLAIN WASHER	RONDELLE PLANE	
10	549909	1	TAPON	PLUG	BOUCHON	
11	513639	1	TAPA	COVER	COUVERCLE	
12	182118	4	TORNILLO	BOLT	BOULON	
13	WM108001	4	ARANDELA MUELLE	SPRING WASHER	RONDELLE RESSORT	
14	247664	1	FILTRO	FILTER	FILTRE	
15	244488	1	ANILLO	RING	ANNEAU	
16	244487	1	FIADOR	CATCH	ATTACH	
17	511680	1	EJE	SHAFT	AXE	
18	ERC6105	1	CONJ.ENGRANAJE VERTI	VERTICAL GEAR ASSY	ENS ENGRANAGE VERTI	
19	189442	1	ANILLO	RING	ANNEAU	
20	247741	1	TAPON	PLUG	BOUCHON	
21	522745	1	CASQUILLO	BUSH	BAGUE	
22	530178	1	ANILLO	BUSH	BAGUE	
23	08331-31266	1	CLIP	CLIP	CLIP	
24	ERC8976	1	TORNILLO	BOLT	BOULON	
25	SH108251	2	TORNILLO	BOLT	BOULON	
26	247665	2	FIADOR	CATCH	ATTACH	
27	ERC6103	1	ENGRANAJE VERTICAL	VERTICAL GEAR	ENGRANAGE VERTICAL	

0201061

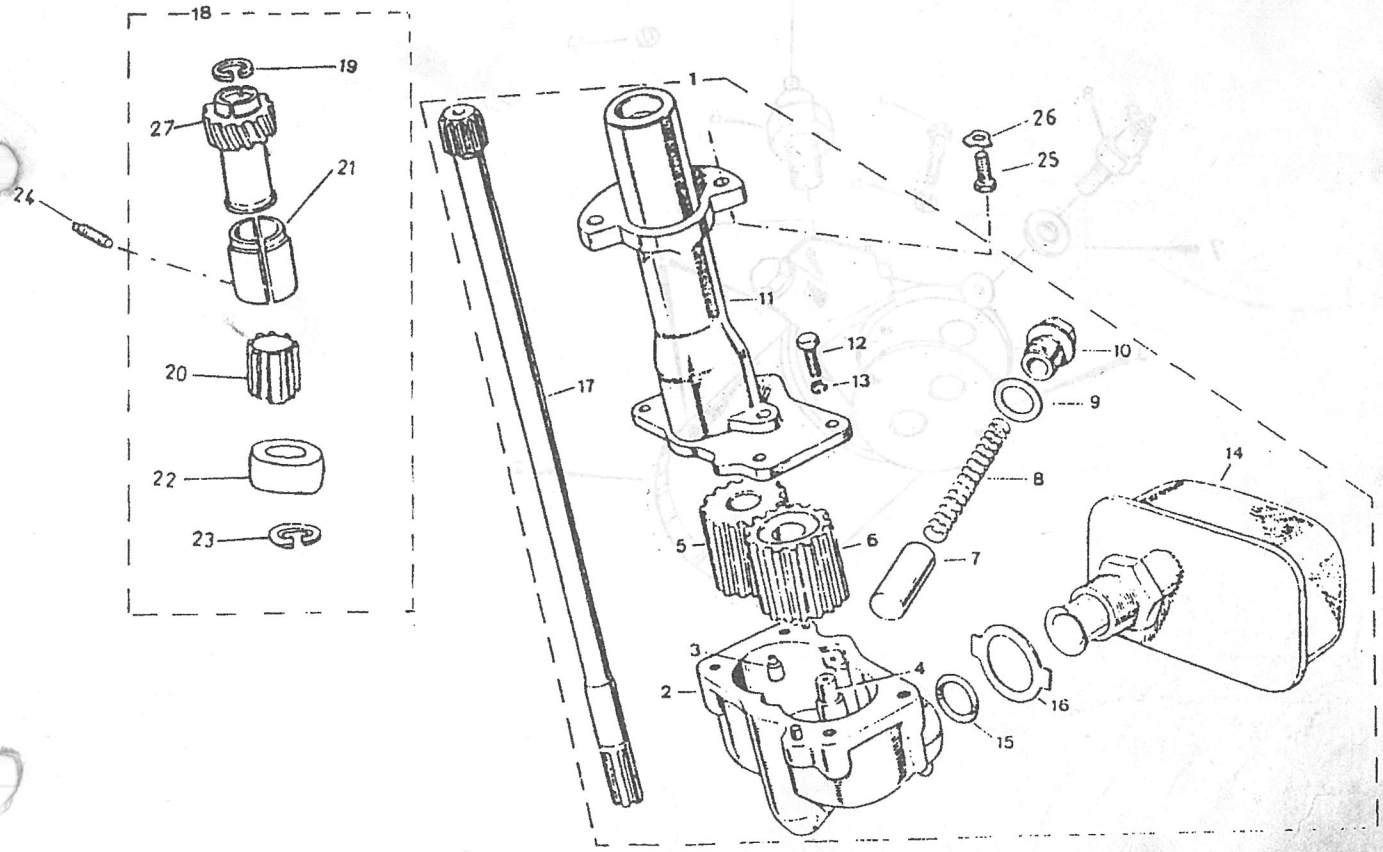

PUBLICACION N:790776 GRUPO=02 ENGRASE SUBGRUPO=FILTRO DE ACEITE
EDICION N: 1 GROUP=02 LUBRICATION SUBGROUP=OIL FILTER
GROUPE=02 GRAISSAGE SUBGROUPE=FILTRE DE HUILE

N.FIG PLATE N.FIG	N.PIEZA PARTNUMBER N.PIECE	CAN QTY OUT	DENOMINACION	DESCRIPTION	DENOMINATION	OBSERVACIONES
1	118523	1	FILTRI DE ACEITE	OIL FILTER	FILTRE A HUILE	
2	193309	1	ELEMENTO MANN	MANN ELEMENT	ELEMENT MANN	
3	598354	1	JUNTA	JOINT	JOINT	
4	SH110301	2	TORNILLO	BOLT	BOULON	
5	WL110001	2	ARANDELA	WASHER	RONDELLE	
6	555704K3	1	TRANSMISOR	OIL TRANSMITTER	TRANSMETTEUR	
7	113581	1	ARANDELA	WASHER	RONDELLE	
8	519864E1	1	INTERRUPTOR	SWITCH	COMMUTATEUR	
9	113376	1	TAPON	PLUG	BOUCHON	
10	189507	1	ARANDELA	WASHER	RONDELLE	

020220

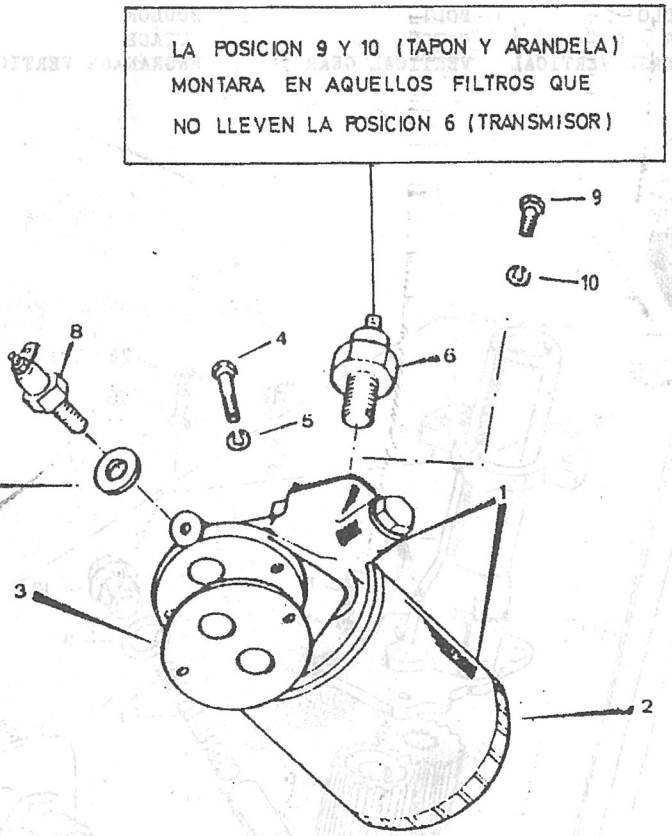

PUBLICACION N:790776 GRUPO=02 ENGRASE SUBGRUPO=TAPA DELANTERA
EDICION N: 1 GROUP=02 LUBRICATION SUBGROUP=FRONT COVER
GROUPE=02 GRAISSAGE SUBGROUPE=COUVERCLE AVANT

N.FIG PLATE N.FIG	N.PIEZA PARTNUMBER N.PIECE	CAN QTY OUT	DENOMINACION	DESCRIPTION	DENOMINATION	OBSERVACIONES
1	113197	1	CARTER	CRANKASE	CARTER	
2	6395	4	FIJA	DOWEL	TIGE	
3	ETC5064	1	RETEN	RETAINER	ARRETOIR	
4	ETC5065	1	RETEN	RETAINER	ARRETOIR	
6	112986	1	JUNTA	JOINT	JOINT	
7	ERC8964	1	TORNILLO	BOLT	BOULON	
8	ERC7974	1	DISTANCIADOR	SPACER	ENTRETOISE	
9	113166	1	JUNTA	JOINT	JOINT	
10	BH108111	1	TORNILLO	BOLT	BOULON	
	BH108125	4	TORNILLO	BOLT	BOULON	
	SH108201	2	TORNILLO	BOLT	BOULON	
	SH108251	1	TORNILLO	BOLT	BOULON	
11	WA108051	8	ARANDELA	WASHER	RONDELLE	
12	WL106001	3	ARANDELA	WASHER	RONDELLE	
13	ERC9516	1	JUNTA	JOINT	JOINT	
14	538039	1	JUNTA	JOINT	JOINT	
15	113610	3	ESPARRAGO	STUD	GOUJON	
16	ERC8836	1	TAPA	COVER	COUVERCLE	
17	ETC4154	1	RETEN	RETAINER	ARRETOIR	
18	BH108131	1	TORNILLO	BOLT	BOULON	
	SH108251	1	TORNILLO	BOLT	BOULON	
	SH108301	6	TORNILLO	BOLT	BOULON	
19	WA108051	8	ARANDELA	WASHER	RONDELLE	
20	165662	1	TAPA	COVER	COUVERCLE	
21	ERC9201	1	JUNTA	JOINT	JOINT	
22	SH106161	3	TORNILLO	SCREW	VIS	
23	WM108001	1	ARANDELA	WASHER	RONDELLE	

020319

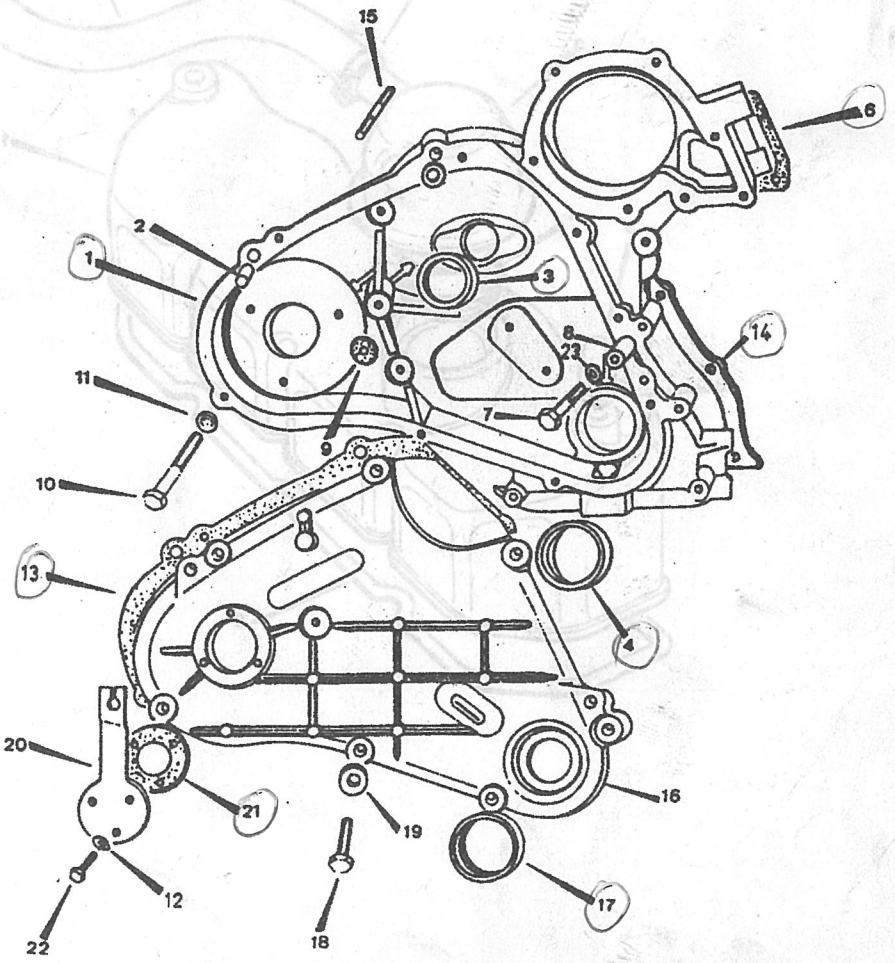

PUBLICACION N:790776 GRUPO=02 ENGRASE SUBGRUPO=TAPA DE BALANCINES
EDICION N: 1 GROUP=02 LUBRICATION SUBGROUP=ROKER COVER
GROUPE=02 GRAISSAGE SUBGROUPE=COUVERCLE CULBUTEUR

N.FIG PLATE N.FIG	N.PIEZA PARTNUMBER N.PIECE	CAN QTY OUT	DENOMINACION	DESCRIPTION	DENOMINATION	OBSERVACIONES
1	247584K1	1	TAPA BALANCINES	ROKER COVER	COUVERCLE CULBUTEURS	
2	247606	1	JUNTA	JOINT	JOINT	
3	118789	1	FILTRO	FILTER	FILTRE	
4	112449	1	GOMA	RUBBER	CAOUTCHOUC	
5	ERC9220	3	TUERCA	NUT	ECROU	
6	273069	3	ARANDELA	WASHER	RONDELLE	
7	G04043	1	TUBO	PIPE	TUYAU	
8	163406	1	ABRAZADERA	CLAMP	ETRIER	

020417

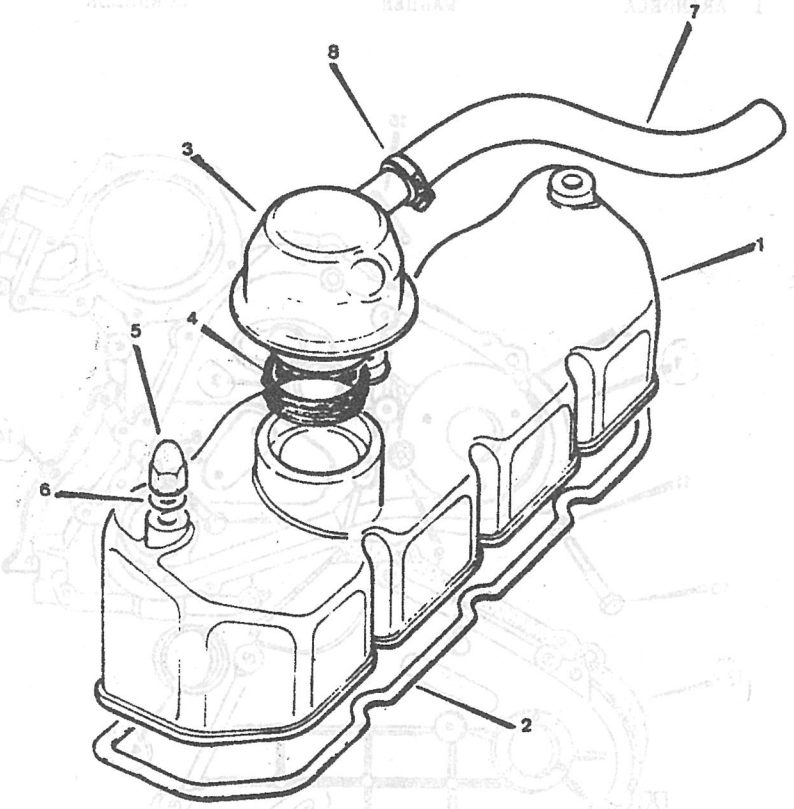

PUBLICACION N:790776 GRUPO=02 ENGRASE SUBGRUPO=TAPA LATERAL
EDICION N: 1 GROUP=02 LUBRICATION SUBGROUP=SIDE COVER
GROUPE=02 GRAISSAGE SUBGROUPE=COUVERCLE LATARALE

N.FIG PLATE N.FIG	N.PIEZA PARTNUMBER N.PIECE	CAN QTY OUT	DENOMINACION	DESCRIPTION	DENOMINATION	OBSERVACIONES
1	247554	1	JUNTA	JOINT	JOINT	
2	118675	1	TAPA	COVER	COUVERCLE	
3	TE108041	2	ESPARRAGO	STUD	GOUJON	
4	WL108001	6	ARANDELA	WASHER	RONDELLE	
5	BH108061	6	TORNILLO	BOLT	BOULON	
6	112459	1	TAPA	COVER	COUVERCLE	
7	247555	1	JUNTA	JOINT	JOINT	
8	239600	1	CLIP	CLIP	CLIP	
9	ETC4070	1	SOPORTE	SUPPORT	SUPPORT	
10	SH108251	3	TORNILLO	BOLT	BOULON	
11	587405	1	ARANDELA	WASHER	RONDELLE	
12	SH108251	1	TORNILLO	BOLT	BOULON	
13	NH108041	1	TUERCA	NUT	ECROU	
14	SH108201	3	TORNILLO	BOLT	BOULON	
15	WL108001	6	ARANDELA	WASHER	RONDELLE	
16	113268	1	TAPA	COVER	COUVERCLE	
17	2550	3	ARANDELA	WASHER	RONDELLE	
18	G04011	1	PLACA	PLATE	PLAQUE	
19	247212	1	JUNTA	JOINT	JOINT	
20	SH108161	3	TORNILLO	BOLT	BOULON	
21	WL108001	3	ARANDELA	WASHER	RONDELLE	
22	06860	1	GOMA	RUBBER	CAOUTCHOUC	

020518

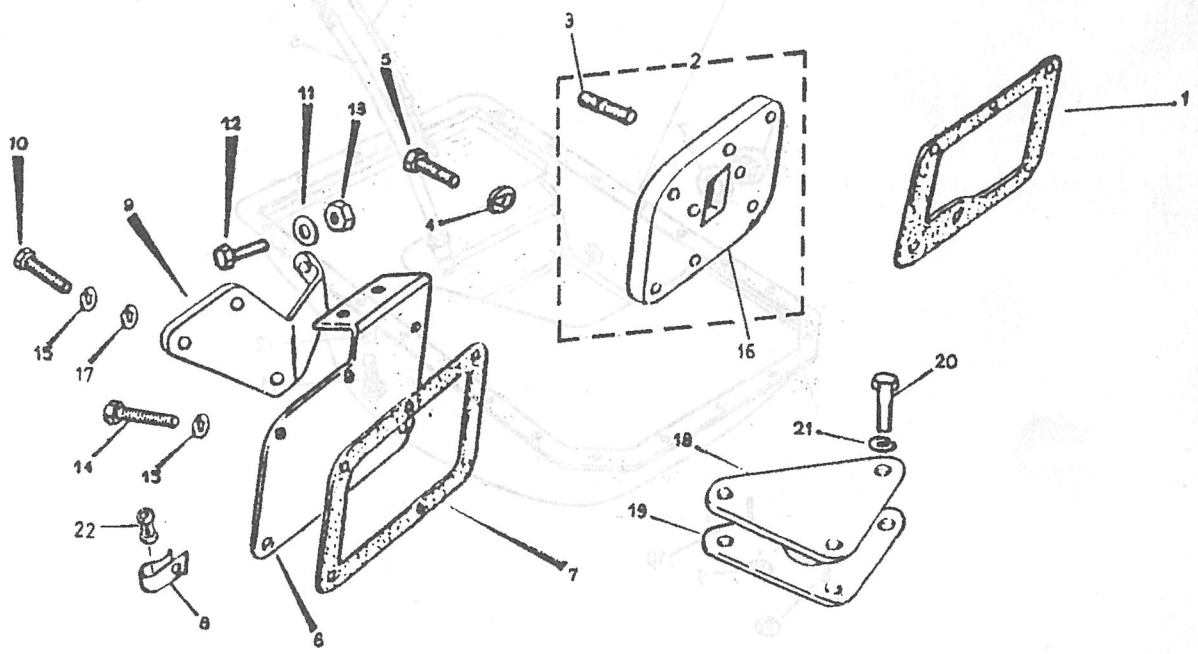

PUBLICACION N:790776 GRUPO=02 ENGRASE SUBGRUPO=CARTER DE ACEITE
EDICION N: 1 GROUP=02 LUBRICATION SUBGROUP=CRANKCASE
GROUPE=02 GRAISSAGE SUBGROUPE=CARTER

N.FIG PLATE N.FIG	N.PIEZA PARTNUMBER N.PIECE	CAN QTY OUT	DENOMINACION	DESCRIPTION	DENOMINATION	OBSERVACIONES
1	529823	1	CARTER	CRANKCASE	CARTER	
2	790756	S-N	SELLANTE TB 1215	SEALING TB 1215	SCELLER TB1215	
3	ERC4199	1	VARILLA	ROD	TRINGLE	
4	532387	1	ANILLO	RING	ANNEAU	
5	ERC8980	1	TUBO M	TUBE M	TUYAU M	
6	536577	1	TAPON	PLUG	BOUCHON	
7	113580	1	ARANDELA	WASHER	RONDELLE	
8	NH108041	1	TUERCA	NUT	ECROU	
9	2920	1	ARANDELA	WASHER	RONDELLE	
10	TE108031	1	ESPARRAGO	STUD	GOUJON	
11	113474	21	TORNILLO	BOLT	BOULON	
12	WL108001	22	ARANDELA	WASHER	RONDELLE	

020604

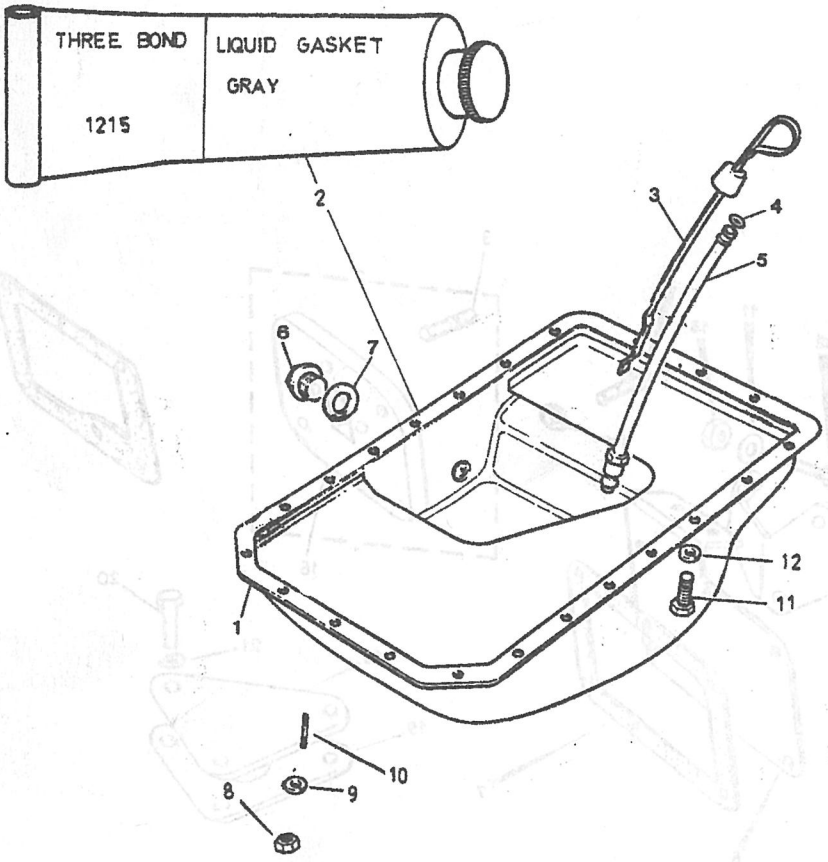

GRUPO 03 03 REFRIGERACION

GROUP 03 03 COOLING

GROUP 03 03 REFROIDISSEMENT

COMPOSICION.....COMPOSITION.....COMPOSICION

REFERENCIA PARTNUMBER NUM.PIECE	DENOMINACION	DESCRIPTION	DENOMINATION
030121	BOMBA DE AGUA	WATER PUMP	POMPE DE EAU
030211	RADIADOR	RADIATOR	RADIATEUR
0303041	CALEFACCION	HEATING	CHAUFFAGE
030305	CONJ.CALEFACCION	HEATER ASSY	ENS CHAUFFAG
030306	MANDOS Y TUBERIAS	CONTROL HAND AND PIP	COMMANDES ET TUYAUS
030308	MANDOS Y TUBERIAS	CONTROL HAND AND PIP	COMMANDES ET TUYAU

GRUPO 03.03.REFRIGERACION

ESP GRUPO 03 03 COOLING

FRA GROUP 03 03 REFROIDISSEMENT

COMPOSICION	COMPOSITION	COMPOSICION

REFERENCIA PARTNUMBER NUM.PIECE	DENOMINACION	DESCRIPTION	DENOMINATION
030121	BOMBA DE AGUA	WATER PUMP	POMPE DE EAU
030211	RADIADOR	RADIATOR	RADIATEUR
030304	CALEFACCION	HEATING	CHAUFFAGE
030403	CONJ.CALEFACCION	HEATER ASSY	ENS CHAUFFAGE
030508	MANDOS Y TUBERIAS	CONTROL HAND WIRE	COMMANDES ET TUYAUX
030509	MANDOS Y TUBERIAS	CONTROL HAND AND PIP	COMMANDES ET TUYAU

PUBLICACION N:790776 GRUPO=03 REFRIGERACION SUBGRUPO=BOMBA DE AGUA
EDICION N: 1 GROUP=03 COOLING SUBGROUP=WATER PUMP
GROUPE=03 REFROIDISSEMENT SUBGROUPE=POMPE DE EAU

N.FIG PLATE N.FIG	N.PIEZA PARTNUMBER N.PIECE	CAN QTY OUT	DENOMINACION	DESCRIPTION	DENOMINATION	OBSERVACIONES
1	118625	1	BOMBA DE AGUA	WATER PUMP	POMPE A EAU	
2	3074	4	ARANDELA MUELLE	SPRING WASHER	RONDELLE RESSORT	
3	ERC3978	1	EJE	SHAFT	ARBRE	
4	113256	1	BUJE	HUB	MOYEN	
5	568301	1	RETEN	RETAINER	ARRETOIR	
6	522858	1	JUNTA	JOINT	JOINT	
7	ERC5599	1	IMPULSOR	IMPELLER	IMPULSEUR	
8	ERC5600	1	TORNILLO	BOLT	BOULON	
9	WL106001	1	ARANDELA MUELLE	SPRING WASHER	RONDELLE DE RESSORT	
10	194461	1	JUEGO DE REPARACION	REPAIR KIT WATER PUM	JEU REPAR POMPE EAU	
11	113525	1	JUNTA	JOINT	JOINT	
12	BH108145	1	TORNILLO	BOLT	BOULON	
	BH108151	2	TORNILLO	BOLT	BOULON	
	BH108171	1	TORNILLO	BOLT	BOULON	
	SH108301	3	TORNILLO	BOLT	BOULON	
13	WA108051	7	ARANDELA MUELLE	SPRING WASHER	RONDELLE DE RESSORT	
14	G04052	1	MANGUITO	SLEEVE	MANCHON	
15	188471	2	ABRAZADERA	CLAMP	ETRIER	
16	113297	1	CAJA DE TERMOSTATO	THERMOSTAT HOUSING	CARTER THERMOSTAT	
17	113363	1	ADAPTADOR CALEFACCIO	HEATING ADAPTER	ADAPTEUR DE CHAUFFAG	2'5BASICO-2'5B E.
	ERC9453	1	ADAPTADOR CALEFACCIO	HEATING ADAPTER	ADAPTEUR DE CHAUFFAG	2500DL Y 2500DC
18	BH106131	3	TORNILLO	BOLT	BOULON	
19	WL106001	3	ARANDELA MUELLE	SPRING WASHER	RONDELLE RESSORT	
20	527109	1	TUBO	PIPE	TUYAU	
	G04185(*)	1	TUBO	PIPE	TUYAU	
21	527110	1	JUNTA	JOINT	JOINT	
22	527235	1	ANILLO	RING	ANNEAU	
23	ERC4104	1	TERMOSTATO 82 C	THERMOSTAT 82 C	THERMOSTAT 82 C	
24	247874	1	JUNTA	JOIMT	JOINT	
25	112965	1	POLEA 2 CANALES	PULLEY 2 GROOVES	POULIE 2 CANALES	
26	166744	1	CORREA DE VENTILADOR	FAN BELT	COURROIE DE VENTILAT	
27	515090	1	VENTILADOR	FAN	VENTILATEUR	
28	256002	4	TORNILLO	BOLT	BOULON	
29	113299	1	ARANDELA	WASHER	RONDELLE	

030121

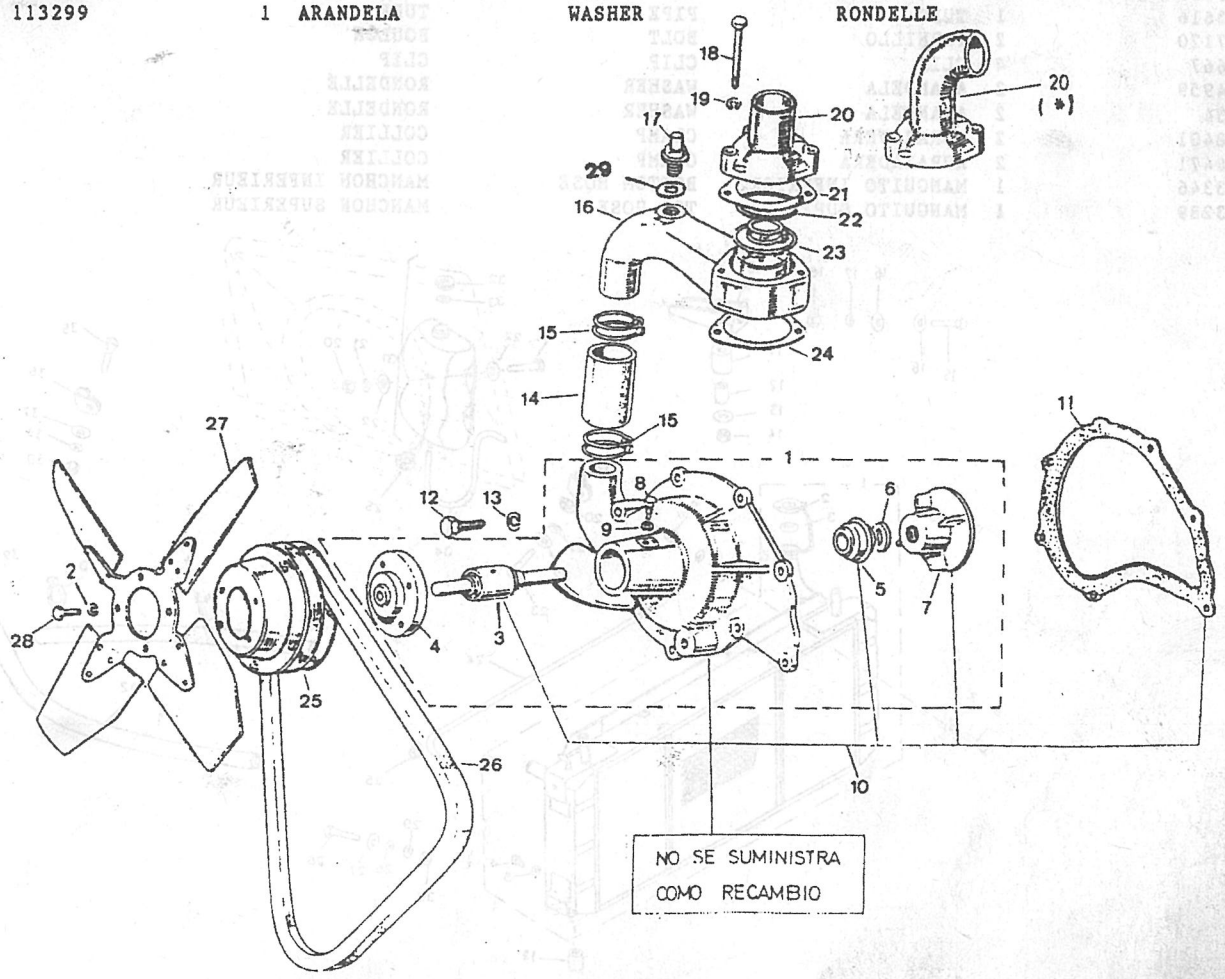

PUBLICACION N:790776 GRUPO=03 REFRIGERACION SUBGRUPO=RADIADOR
EDICION N: 1 GROUP=03 COOLING SUBGROUP=RADIATOR
GROUPE=03 REFROIDISSEMENT SUBGROUPE=RADIATEUR

N.FIG PLATE N.FIG	N.PIEZA PARTNUMBER N.PIECE	CAN QTY OUT	DENOMINACION	DESCRIPTION	DENOMINATION	OBSERVACIONES
1	118501	1	RADIADOR	RADIATOR	RADIATEUR	
2	564713E1	1	TAPON	PLUG	BOUCHON	
3	564999	1	JUNTA	JOINT	JOINT	
4	194085	1	TAPON	PLUG	BOUCHON	
5	213959E1	1	JUNTA	JOINT	JOINT	
6	182113	5	TORNILLO	BOLT	BOULON	
7	3822	6	ARANDELA	WASHER	RONDELLE	
8	WM108001	3	ARANDELA MUELLE	SPRING WASHER	RONDELLE MUELLE	
9	181184	3	TUERCA	NUT	ECROU	
10	737077	2	SOPORTE	SUPPORT	SUPPORT	
11	NRC5310	4	GOMA	RUBBER	CAOUTCHOUC	
12	572313	2	DISTANCIADOR	SPACER	ENTRETOISE	
13	3841	2	ARANDELA PLANA	PLAIN WASHER	RONDELLE PLANE	
14	NH108041	2	TUERCA	NUT	ECROU	
15	182117	2	TORNILLO	BOLT	BOULON	
16	3830	4	ARANDELA PLANA	PLAIN WASHER	RONDELLE PLANE	
17	WM108001	2	ARANDELA MUELLE	SPRING WASHER	RONDELLE MUELLE	
18	181185	2	TUERCA	NUT	ECROU	
19	RTC0602	1	CLIP	CLIP	CLIP	
20	181184	3	TUERCA	NUT	ECROU	
21	052257	3	ARANDELA	WASHER	RONDELLE	
22	3900	7	ARANDELA	WASHER	RONDELLE	
23	255211	1	TORNILLO	BOLT	BOULON	
24	112353	1	TUBO	PIPE	TUBE	
25	50302E1	3	ABRAZADERA	CLAMP	COLLIER	
26	237121	3	TORNILLO	BOLT	BOULON	
27	3816	3	ARANDELA	WASHER	RONDELLE	
28	189484	3	ARANDELA	WASHER	RONDELLE	
29	3073	3	ARANDELA	WASHER	RONDELLE	
30	180124	5	TUERCA	NUT	ECROU	
31	206073	1	BOTELLA	BOTTLE	BOUTEILLE	
32	201805	1	TAPON	PLUG	BOUCHON	
33	201806	1	JUNTA	GASKET	JOINT	
34	113616	1	TUBO	PIPE	TUBE	
35	237120	2	TORNILLO	BOLT	BOULON	
36	56667	4	CLIP	CLIP	CLIP	
37	054959	2	ARANDELA	WASHER	RONDELLE	
38	4034	2	ARANDELA	WASHER	RONDELLE	
39	188401	2	ABRAZADERA	CLAMP	COLLIER	
40	188471	2	ABRAZADERA	CLAMP	COLLIER	
41	113346	1	MANGUITO INFERIOR	BOTTOM HOSE	MANCHON INFERIEUR	
42	113289	1	MANGUITO SUPERIOR	TOP HOSE	MANCHON SUPERIEUR	

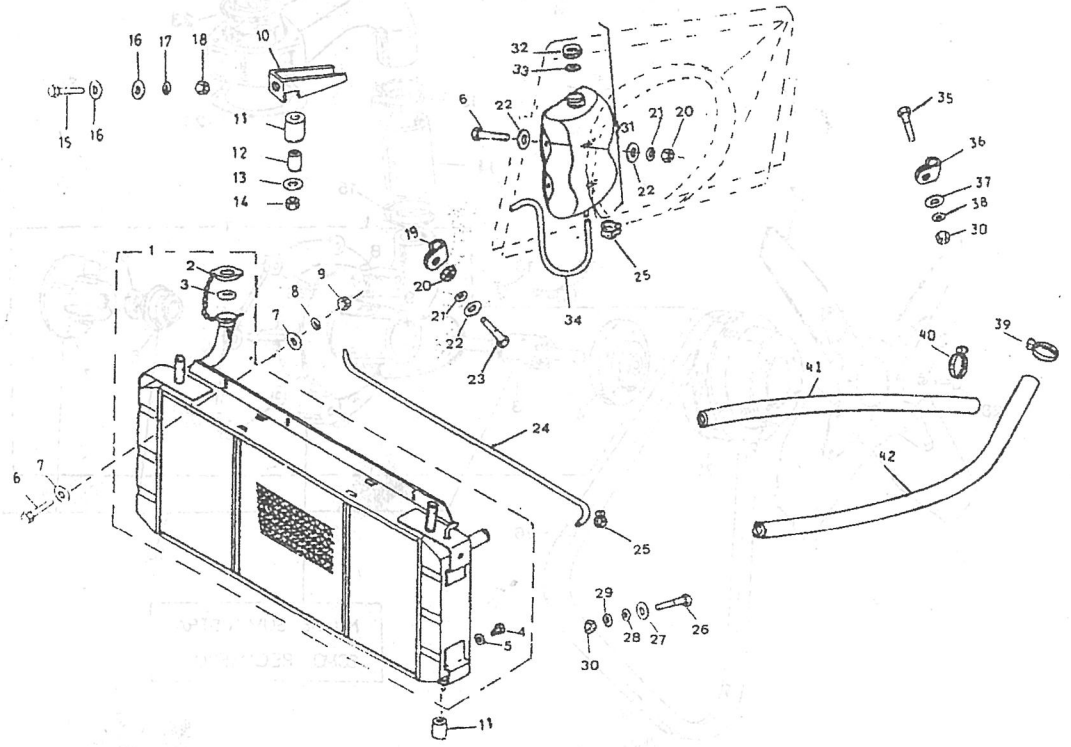

PUBLICACION N:790776 GRUPO=03 REFRIGERACION SUBGRUPO=CALEFACCION
EDICION N: 1 GROUP=03 COOLING SUBGROUP=HEATING
GROUPE=03 REFROIDISSEMENT SUBGROUPE=CHAUFFAGE

N.FIG PLATE N.FIG	N.PIEZA PARTNUMBER N.PIECE	CAN QTY OUT	DENOMINACION	DESCRIPTION	DENOMINATION	OBSERVACIONES
1	209127	1	CONJ.CALEFACCION	HEATER ASSY	ENS CHAUFFAG	2'5BASICO-2'5B ES
2	790120	1	CALEFACTOR	HEATER	APPAREIL	
3	790351	1	GRIFO	COCK	ROBINET	
4	790352	1	JUNTA	JOINT	JOINT	
5	MTC6382	2	MANGUITO	HOSE	MANCHON	
6	MRC9668	1	DESEMPA\ADOR LD	WINDSHIELD DEFROS RH	BOUCHE ANTI-BUEE CD	
7	MRC9669	1	DESEMPA\ADOR L/I	WINDSHIELD DEFROS LH	BOUCHE ANTI-BUEE CD	
8	730711	1	TUBO FLEXIBLE L/I	FLEXIBLE TUBE LH	TUBE FLEXIBLE CG	
9	203569	1	TUBO FLEXIBLE L/D	FLEXIBLE TUBE RH	TUBE FLEXIBLE CD	
10	182112	4	TORNILLO	BOLT	BOULON	
11	3840	4	ARANDELA PLANA	PLAIN WASHER	RONDELLE PLANE	
12	3074	9	ARANDELA MUELLE	SPRING WASHER	RONDELLE RESSORT	
13	181184	9	TUERCA	NUT	ECROU	
14	730555	4	SOPRTE	BRACKET	SUPPORT	
15	369077	2	TUERCA PLASTICO	NUT	ECROU	
16	WA105001	2	ARANDELA PLANA	PLAIN WASHER	RONDELLE PLANE	
17	79307	2	TORNILLO	BOLT	BOULON	
18	4071	6	ARANDELA PLANA	PLAIN WASHER	RONDELLE PLANE	
19	240431	4	ABRAZADERA	CLAMP	COLLIER	
20	569156	1	MANGUITO	SLEEVE	MANCHON	
21	730556	1	MANGUITO	SLEEVE	MANCHON	
22	G04137	2	ABRAZADERA	CLAMP	COLLIER	
23	738108	1	SOPORTE VALVULA	VALVUE BRACKET	SUPPORT SOUPAPE	
24	AB614064	1	TORNILLO	BOLT	BOULON	
25	255214	1	TORNILLO	BOLT	BOULON	
26	730557	1	DISTANCIADOR	SPACER	ENTRETOISE	
27	166770	1	INTERRUPTOR	SWITCH	COMMETATEUR	
28	194634	1	MOTOR ELECTICO	ELECTRIC ENGINE	MOTEUR ELECTRIQUE	
29	194547	1	TRAMPILLA	TRAP DOOR	CLAPET	
30	113299	1	ARANDELA	WASHER	RONDELLE	
31	113363	1	ADAPTADOR	ADAPTER	ADAPTATEUR	
32	194647	1	TRAMPILLA	TRAP DOOR	CLAPET	

0303041

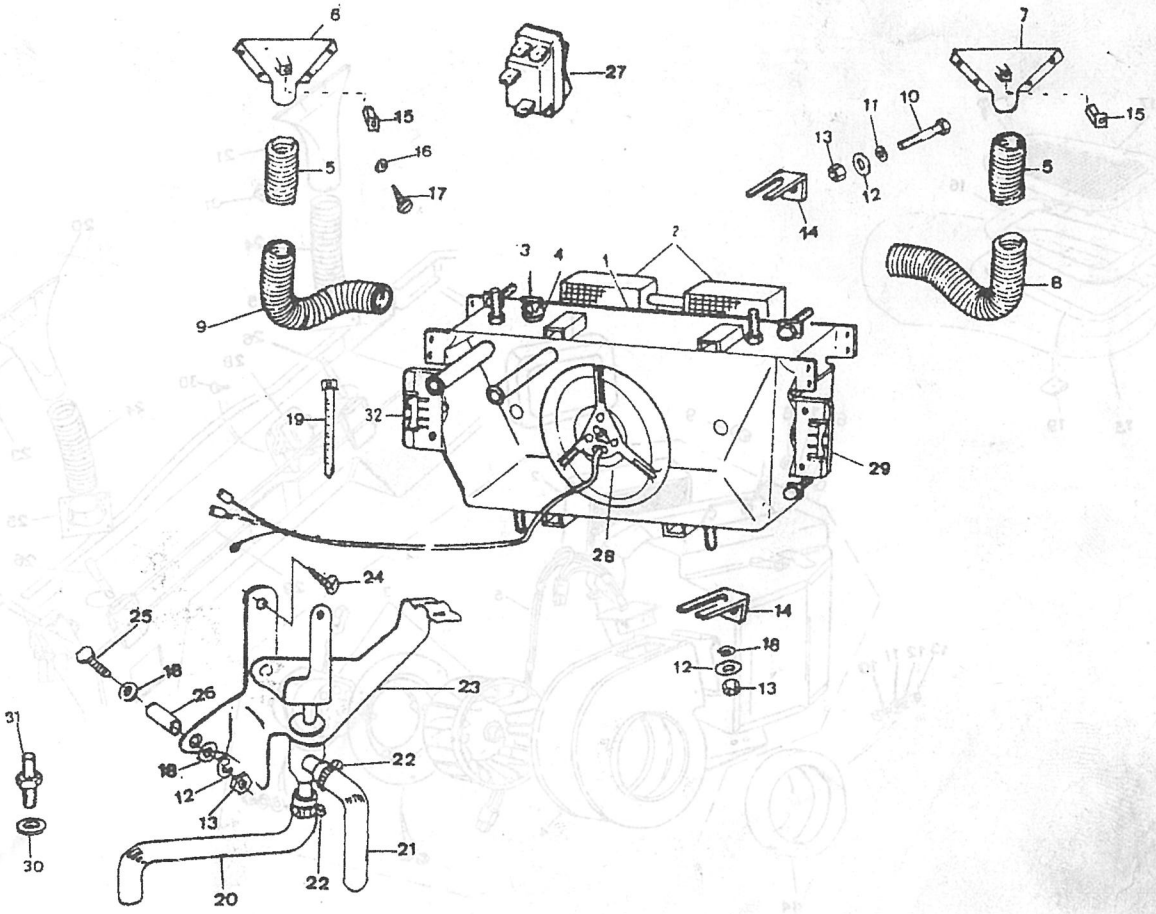

PUBLICACION N:790776 GRUPO=03 REFRIGERACION SUBGRUPO=CONJ.CALEFACCION
EDICION N: 1 GROUP=03 COOLING SUBGROUP=HEATER ASSY
GROUPE=03 REFROIDISSEMENT SUBGROUPE=ENS CHAUFFAG

N.FIG PLATE N.FIG	N.PIEZA PARTNUMBER N.PIECE	CAN QTY OUT	DENOMINACION	DESCRIPTION	DENOMINATION	OBSERVACIONES
1	MTC7652	1	CONJ CALEFACCION	HEATER ASSY	ENS CHAUFAGE	2500DL Y 2500DC
2	AAP817	1	CALEFACTOR	HEATER	APPAREIL	
3	RTC4201	1	MOTOR Y ROTOR	MOTOR AND ROTOR	MOTEUR ET ROTOR	
4	AAP811	1	VOLUTA	VOLUTE	VOLUTE	
5	AAP889	1	CABLEADO Y RESISTENC	HARNESS AND RESISTOR	CABLAGE ET RESISTANC	
6	182118	2	TORNILLO	BOLT	BOULON	
7	WM108001	2	ARANDELA MUELLE	SPRING WASHER	RONDELLE RESSORT	
8	3830	2	ARANDELA PLANA	PLAIN WASHER	RONDELLE PLANE	
9	79103	2	TUERCA	NUT	ECROU	
10	182113	2	TORNILLO	BOLT	BOULON	
11	3840	2	ARANDELA PLANA	PLAIN WASHER	RONDELLE PLANE	
12	3074	2	ARANDELA MUELLE	SPRING WASHER	RONDELLE RESSORT	
13	181184	2	TUERCA	NUT	ECROU	
14	MRC8378	1	JUNTA	GASKET	JOINT	
15	MUC2418	1	TOMA DE AIRE	DUCT	PRISE D'AIR	
16	MRC9998	1	JUNTA	SEAL-DUCT TO WING	JOINT	
17	MRC9938	1	MALLA	FINISHER	MAILLE	
18	00008-00000	7	TORNILLO	BOLT	BOULON	
19	AJ608041	7	TUERCA "V"	SPIRE CLIP	ECROU "V"	
20	MRC9668	1	BOCA ANTI-VAHO L/D	DEMISTER OUTLER RH	BOUCHE ANTI-BUEE CD	
21	MRC9669	1	BOCA ANTI-VAHO L/I	DEMISTER OUTLER LH	BOUCHE ANTI-BUEE CG	
22	79307	2	TORNILLO	BOLT	BOULON	
23	WA105001	2	ARANDELA PLANA	PLAIN WASHER	RONDELLE PLANE	
24	MTC6382	2	TUBO FLEXIBLE	FLEXIBLE TUBE	TUBE FLEXIBLE	
25	MRC7281K1	2	CONEXION	CONECTION	CONNEXION	
26	346976	2	MUELLE	SPRING OUTLER FLAPS	RESSORT	
27	395829	1	CANAL SALIDA CAL.L/D	HEATER DUCT-OUTLER R	CONDUIT SORTIE CH.CD	
28	395830	1	CANAL SALIDA CAL.L/I	HEATER DUCT-OUTLER L	CONDUIT SORTIE CH. C	
29	346894	1	TAPAS SALIDA AIRE CA	OUTLER FLAPS COMPLET	FLAPS DE SORTIE D'AI	
30	185254	4	TORNILLO	BOLT	BOULON	
31	369077	2	TUERCA	NUT	ECROU	
32	MTC6871	1	JUNTA	GASKET	JOINT	

030305

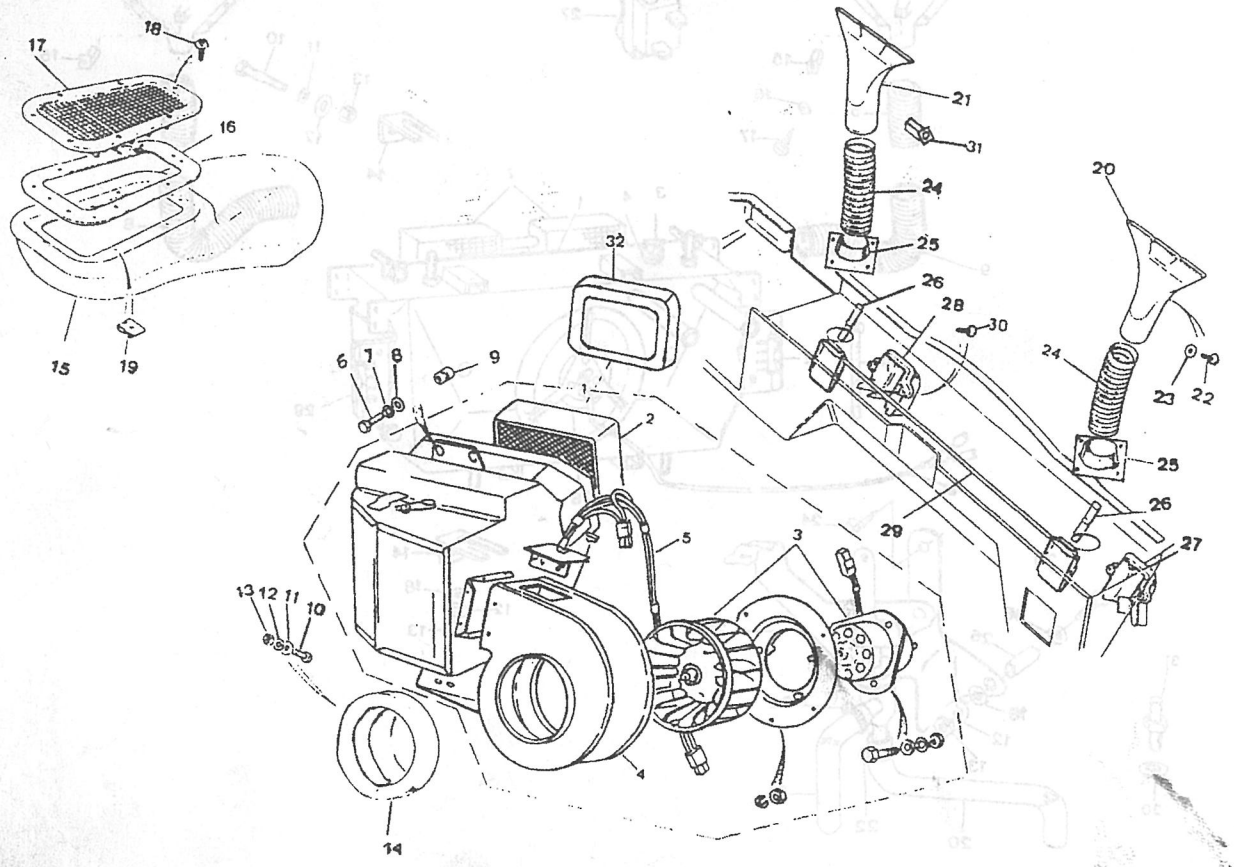

PUBLICACION N:790776 GRUPO=03 REFRIGERACION SUBGRUPO=MANDOS Y TUBERIAS
EDICION N: 1 GROUP=03 COOLING SUBGROUP=CONTROL HAND AND PIP
GROUPE=03 REFROIDISSEMENT SUBGROUPE=COMMANDES ET TUYAUS

N.FIG PLATE N.FIG	N.PIEZA PARTNUMBER N.PIECE	CAN QTY OUT	DENOMINACION	DESCRIPTION	DENOMINATION	OBSERVACIONES
1	MTC7656	1	MANDOS CALEFACCION	CONTROL ASSY-OUTLET	COMMANDE DE CHAUFFAG	2500DL Y 2500DC
2	AAP876	1	CABLE DE CONTROL	CONTROL CABLE-OUTLET	CABLE DE CONTROLE	
3	SE105161	2	TORNILLO	SCREW	VIS	
4	WA105001	2	ARANDELA PLANA	PLAIN WASHER	RONDELLE PLANE	
5	347586	1	CONJ PALANCAS	LEVERS ASSY	ENS LEVIERS	
6	MTC2805	3	EMPU/ADURA	KNOB-LEVER	POIGNEE	
7	SG103084	3	TORNILLO	BOLT	BOULON	
8	SE808244	2	TORNILLO	SCREW	VIS	
9	184255	2	ARANDELA PLANA	PLAIN WASHER	RONDELLE PLANE	
10	MRC9922	2	DISTANCIADOR	SPACER	ENTRETOISE	
11	MTC6194	1	CABLE CONTROL MEZCLA	CONTROL CABLE-BLEND	CABLE CONTROLE MELAN	
12	347939	1	CABLE CONTROL DISTRI	CONTROL CABLE DISTRI	CABLE CONTROLE DISTR	
13	566902K1	1	MU/ON PARA CABLE	TRUNNION-CABLE	TOURILLON DE CABLE	
14	DZB3218K1	2	MU/ON PARA CABLE	TRUNNION-CABLE	TOURILLON DE CABLE	
15	MTC6006	1	PLACA INDICADORA	LABEL-HEATER	PLAQUE INDICATEUR	
16	MTC6007	1	PLACA INDICADORA	LABEL-FAN	PLAQUE INDICATEUR	
17	240430	2	ABRAZADERA	CLAMP	COLLIER	
18	730672	1	TUBO	PIPE	TUBE	
19	730673	1	TUBO L-560	PIPE L-560	TUBE L-560	
20	G04098	4	ABRAZADERA	CLAMP	ETRIER	
21	ERC9453	2	ADAPTADOR	ADAPTER	ADAPTATEUR	2500DL Y 2500DC
22	113299	2	JUNTA	JOINT	JOINT	
23	13H7343	1	CLIP	CLIP	CLIP	

030306

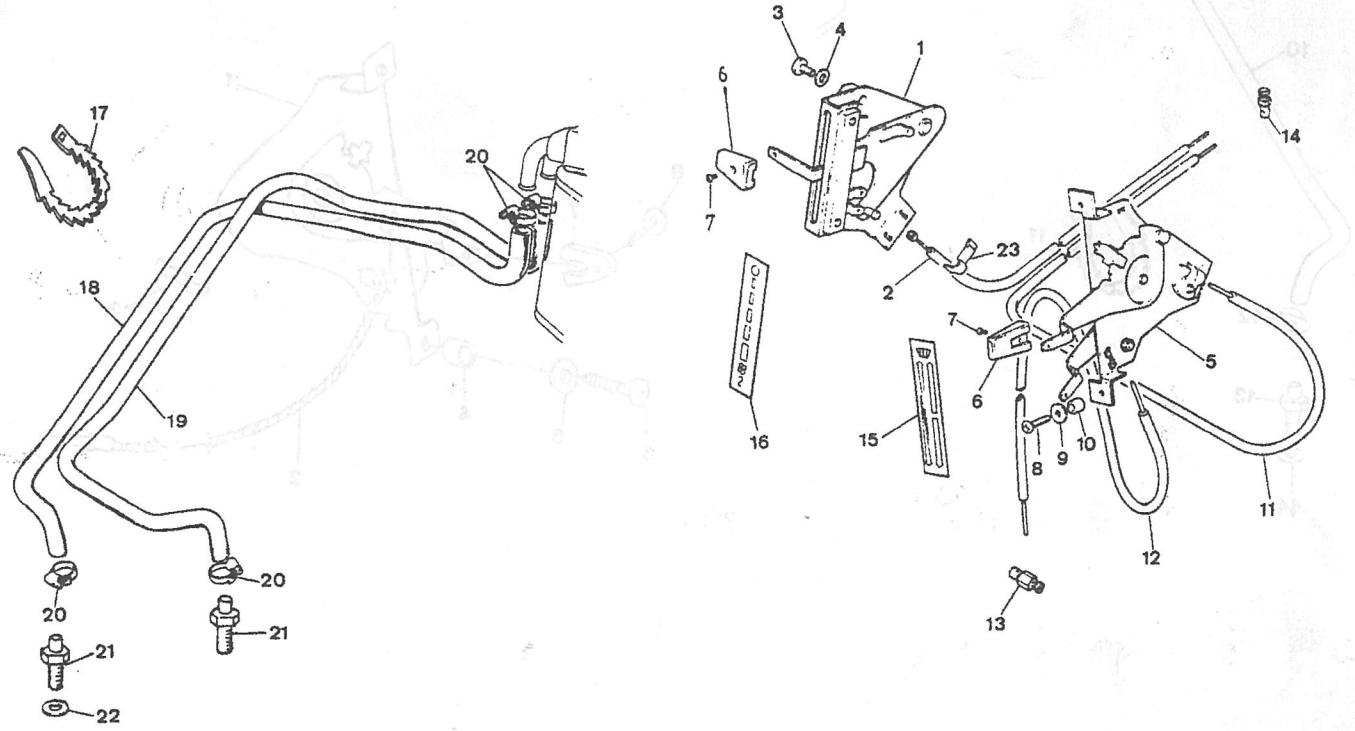

PUBLICACION N:790776 GRUPO=03 REFRIGERACION SUBGRUPO=MANDOS Y TUBERIAS
EDICION N: 1 GROUP=03 COOLING SUBGROUP=CONTROL HAND AND PIP
GROUPE=03 REFROIDISSEMENT SUBGROUPE=COMMANDES ET TUYAU

N.FIG PLATE N.FIG	N.PIEZA PARTNUMBER N.PIECE	CAN QTY OUT	DENOMINACION	DESCRIPTION	DENOMINATION	OBSERVACIONES
1	738129	1	MANDO CALEFACCION	CONTROL ASSY-OUTLER	COMMANDE DE CHAUFFAG	2'5BASICO Y 2'5B
2	738130	1	CABLE CONTROL	CONTROL CABLE-OUTLER	CABLE DE CONTROLE	
3	13H7343	1	CLIP	CLIP	CLIP	
4	MRC9922	2	DISTANCIADOR	SPACER	ENTRETOISE	
5	184255	2	ARANDELA PLANA	PLAIN WASHER	RONDELLE PLANE	
6	SE808244	2	TORNILLO	BOLT	BOULON	
7	MTC2805	1	EMPU\ADURA	KNOB-LEVER	POIGNEE	
8	SG103084	1	TORNILLO	BOLT	BOULON	
9	MTC6006K1	1	PLACA INDICADORA	LABEL-HEATER	PLAQUE INDICATEUR	
10	730561	1	MANGUITO CALEFACCION	HOSE	MANCHON	
11	240430	2	ABRAZADERA	CLAMP	COLLIER	
12	G04137	2	ABRAZADERA	CLAMP	COLLIER	
13	113363	1	ADAPTADOR	ADAPTER	ADAPTATEUR	
14	113299	1	ARANDELA	WASHER	RONDELLE	

030308

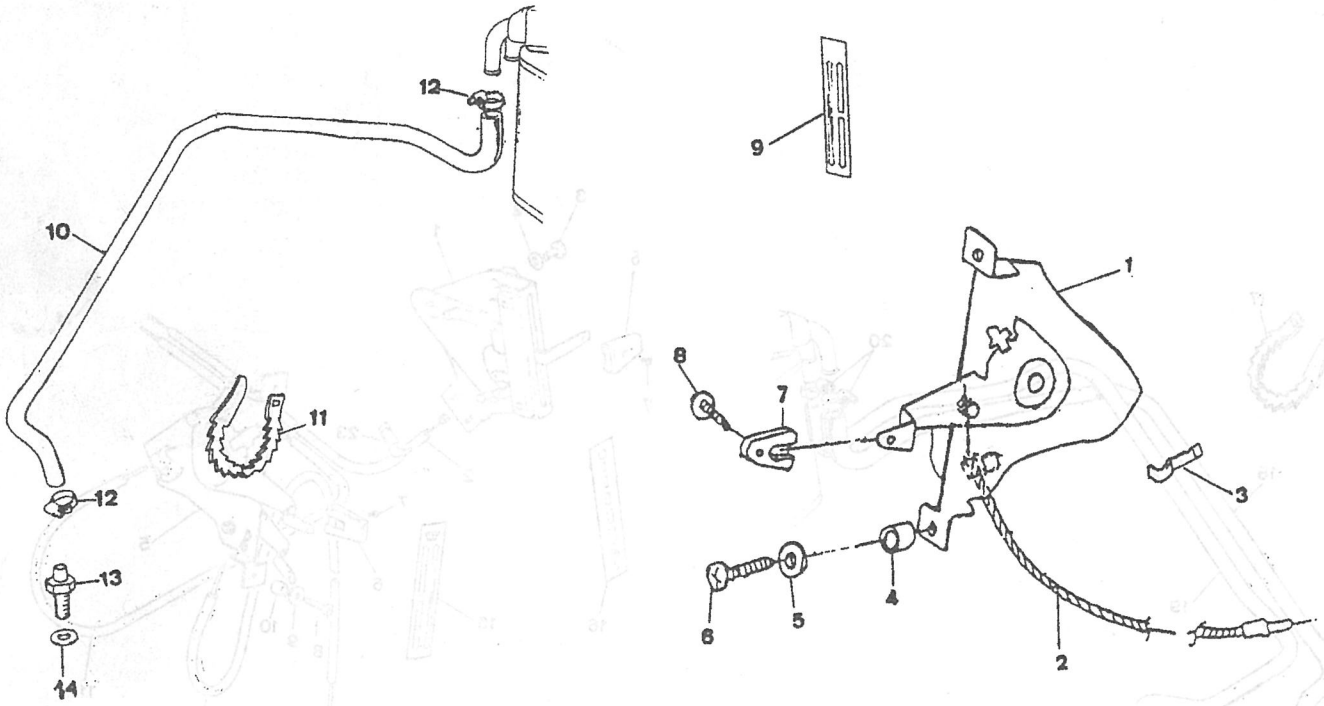

GRUPO 04 04 SISTEMA ALIMENTAC

GROUP 04 04 FUEL SYSTEM

GROUP 04 04 SYSTEM D'ALIMENTA

COMPOSICION.....COMPOSITION.....COMPOSICION

REFERENCIA PARTNUMBER NUM.PIECE	DENOMINACION	DESCRIPTION	DENOMINATION
040301	BOMBA DISTRIBUCION	DISTRIBUTOR PUMP	POMPE D'INJECTION
040396	CABLES DE ACELERADOR	ACCELERATOR CABLES	CABLES ACCELERATEUR
040811	BOMBA DE COMBUSTIBLE	FUEL PUMP	POMPE D ESSENCE
040820	FILTRO DE COMBUSTIBL	FUEL PUMP FILTRE	FILTRE DE CARBURANT
040947	TUBERIAS DE COMBUSTI	FUEL PIPES	TUYAU DE COMBUSTIBLE
040948	TUBERIAS DE COMBUSTI	FUEL PIPES	TUYAU DE COMBUSTIBLE
040998	DEPOSITO COMBUSTIBLE	FUEL TANK	RESERVOIR CARBURANT
041035	FIJACIONES DEPOSITOS	FUEL TANK ATTACMMENT	FIXAGE DE RESERVOIR
041036	FIJACIONES DEPOSITOS	FUEL TANK ATTACMMENT	FIXAGE RESERVOIR
041113	BOCA DE LLENADO	FILLER TUBE	TUYAU TELESCOPIQUE
041114	BOCA DE LLENADO	FILLER TUBE	TUYAU TELESCOPIQUE
041219	FILTRO DE AIRE	AIR CLEAVER	FILTRE DE AIRE
041405	COLECTORES	MANIFOLDS	COLLECTEURS
041496	TUBOS DE ESCAPE	EXAUST PIPE	TUYAUS D'ECHAPPEMENT
041497	TUBOS DE ESCAPE	EXAUST PIPE	TUYAUS D'ECHAPPEMENT

GRUPO:EOM 04 SISTEMA ALIMENTAC

GROUP: 04 FUEL SYSTEM

GROUP 04 04 SYSTEM D'ALIMENTA

COMPOSICIONA.....COMPOSITION.....COMPOSICION

REFERENCIA PARTNUMBER NUM.PIECE	DENOMINACION	DESCRIPTION	DENOMINATION
040301	BOMBA DISTRIBUCION	DISTRIBUTOR PUMP	POMPE D'INJECTION
040356	CABLES DE ACELERADOR	ACCELERATOR CABLES	CABLES ACCELERATEUR
040811	BOMBA DE COMBUSTIBLE	FUEL PUMP	POMPE D'ESSENCE
040820	FILTRO DE COMBUSTIBLE	FUEL PUMP FILTER	FILTRE DE CARBURANT
040847	TUBERIAS DE COMBUSTI	FUEL PIPES	TUYAU DE COMBUSTIBLE
040848	TUBERIAS DE COMBUSTI	FUEL PIPES	TUYAU DE COMBUSTIBLE
040898	DEPOSITO COMBUSTIBLE	FUEL TANK	RESERVOIR CARBURANT
041035	PILACIONES DEPOSITOS	FUEL TANK ATTACHMENT	FIXAGE DE RESERVOIR
041036	PILACIONES DEPOSITOS	FUEL TANK ATTACHMENT	FIXAGE RESERVOIR
041112	BOCA DE LLENADO	FILLER TUBE	TUYAU REMPLISSAGE
041114	BOCA DE LLENADO	FILLER TUBE	TUYAU REMPLISSAGE
041219	FILTRO DE AIRE	AIR CLEANER	FILTRE DE AIRE
041405	COLECTORES	MANIFOLDS	COLLECTEURS
041496	TUBOS DE ESCAPE	EXHAUST PIPE	TUYAUX D'ECHAPPEMENT
041497	TUBOS DE ESCAPE	EXHAUST PIPE	TUYAUX D'ECHAPPEMENT

PUBLICACION N:790776 GRUPO=04 SISTEMA ALIMENTAC SUBGRUPO=BOMBA DISTRIBUCION
EDICION N: 1 GROUP=04 FUEL SYSTEM SUBGROUP=DISTRIBUTOR PUMP
GROUPE=04 SYSTEM D'ALIMENTA SUBGROUPE=POMPE D'INJECTION

N.FIG PLATE N.FIG	N.PIEZA PARTNUMBER N.PIECE	CAN QTY OUT	DENOMINACION	DESCRIPTION	DENOMINATION	OBSERVACIONES
1	118785	1	BOMBA DISTRIBUCION	DISTRIBUTOR PUMP	POMPE D'INJECTION	
2	118545	1	PALANCA	LEVER	LEVIER	
3	BAU4611L	1	ELECTRO-VALVULA	ELECTROVALVE	ELECTROVANNE	
4	790786	1	VALVULA DE PRESION	PRESSURE VALVE	SOUPAPE DE PRESION	
5	G04069	1	JUNTA	JOINT	JOINT	
6	08310-11083	3	TUERCA	NUT	ECROU	
7	WL108001	3	ARANDELA	WASHER	RONDELLE	
8	2920	3	ARANDELA	WASHER	RONDELLE	
9	118219	1	TUBERIA	PIPE	TUYAU	
10	273069	8	ARANDELA	WASHER	RONDELLE	
11	273521	3	TORNILLO	BOLT	BOULON	
12	563195	1	TORNILLO	BOLT	BOULON	
13	NH108041	8	TUERCA	NUT	ECROU	
14	WL108001	8	ARANDELA	WASHER	RONDELLE	
15	564332	4	INYECTOR	INJECTOR	INJECTEUR	
16	193607	1	CONJ TOBERAS	NOZZLE ASSY	ENS CORPS DE POINTEA	
17	247726E1	4	TOBERA	NOZZLE	CORPS DE POINTEAU	
18	185200	4	ARANDELA	WASHER	RONDELLE	
19	272474	4	ARANDELA	WASHER	RONDELLE	
20	ERC5973	1	TUBERIA CILINDRO 1	PIPE CYLINDER 1	TUYAU POUR CYLINDRE1	
	ERC5974	1	TUBERIA CILINDRO 2	PIPE CYLINDER 2	TUTAU POUR CYLINDRE2	
	ERC5975	1	TUBERIA CILINDRO 3	PUPE CYLINDER 3	TUYAU POUR CYLINDRE3	
	ERC5976	1	TUBERIA CILINDRO 4	PIPE CYLINDER 4	TUYAU POUR CYLINDRE4	
21	182112	3	TORNILLO	SCREW	VIS	
22	541229	6	PLACA	PLATE	PLAQUE	
23	272512	6	GOMA	RUBBER	CAOUTCHOUC	
24	3074	3	ARANDELA	WASHER	RONDELLE	
25	254800	3	TUERCA	NUT	ECROU	
26	790785	2	ARANDELA	WASHER	RONDELLE	
27	790784	1	CONEXION	CONNECTION	CONNEXION	
28	790783	1	RACORD	BANJO UNION	RACCORD	
29	790782	1	ANILLO	RING	ANNEAU	

040301

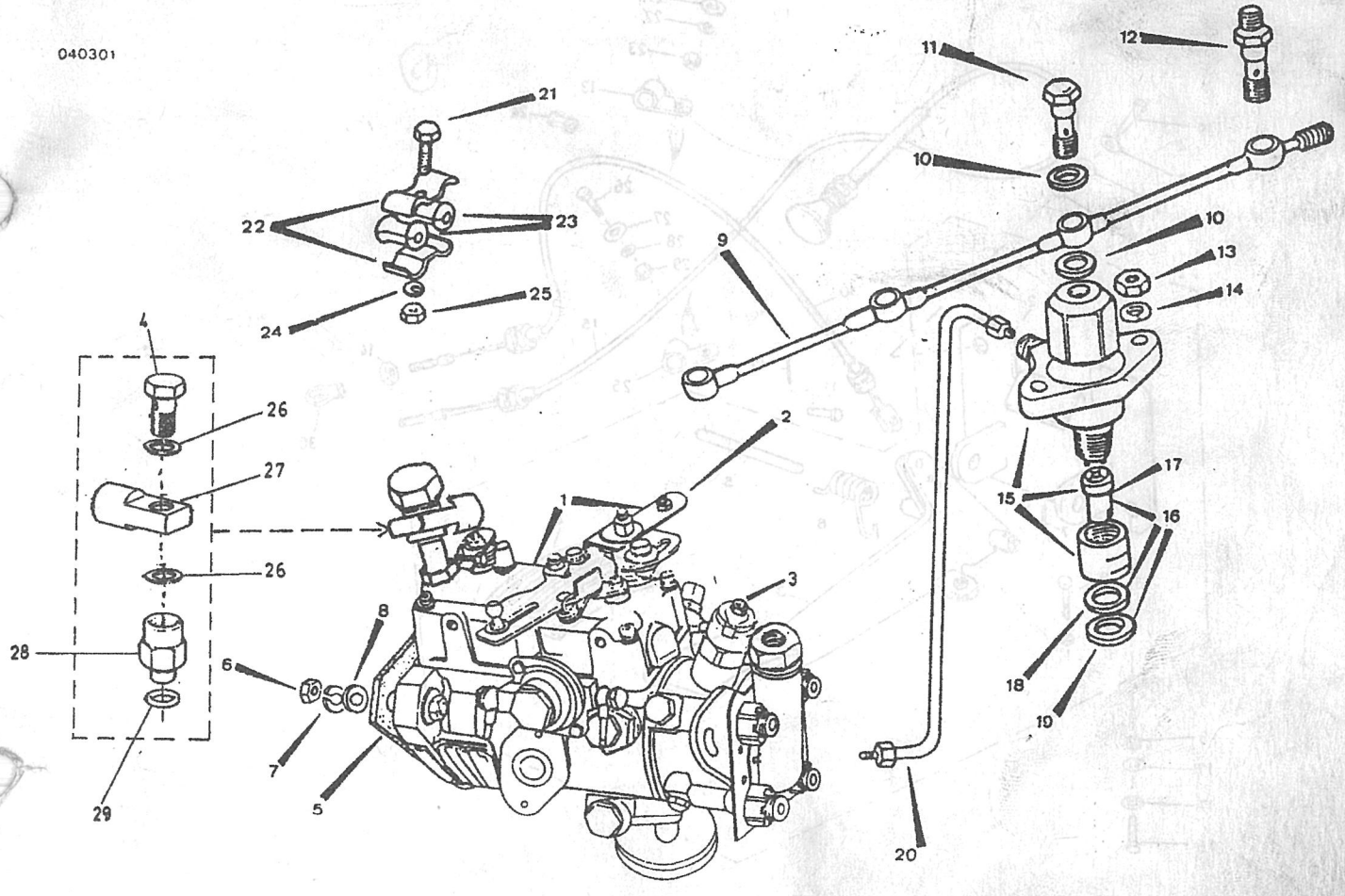

PUBLICACION N:790776 GRUPO=04 SISTEMA ALIMENTAC SUBGRUPO=CABLES DE ACELERADOR
EDICION N: 1 GROUP=04 FUEL SYSTEM SUBGROUP=ACCELERATOR CABLES
GROUPE=04 SYSTEM D'ALIMENTA SUBGROUPE=CABLES ACCELERATEUR

N.FIG PLATE N.FIG	N.PIEZA PARTNUMBER N.PIECE	CAN QTY OUT	DENOMINACION	DESCRIPTION	DENOMINATION	OBSERVACIONES
1	164686	1	CONS PEDAL	PEDAL ASSY	ENS PEDALE	
2	164647	1	SOPORTE	SUPPORT	SUPPORT	
3	164685	1	PEDAL	PEDAL	PEDALE	
4	11H1781	1	GOMA	RUBBER	CAOUTCHOUC	
5	NRC4475	1	EJE	SHAFT	AXE	
6	NRC8253H1	1	MUELLE	SPRING	RESSORT	
7	PA105161	1	PASADOR	PIN	GOUPILLE	
8	255214	1	TORNILLO	BOLT	BOULON	
9	181184	1	TUERCA	NUT	ECROU	
10	165663	1	CABLE ACELERADOR	CABLE	CABLE	
11	NRC5502	1	PASADOR	BOLT	BOULON	
12	4042	1	PASADOR	PIN	GOUPILLE	
13	239600	1	CLIP	CLIP	CLIP	
14	180124	1	TUERCA	NUT	ECROU	
15	737786	1	CABLE APER.CAPO	CABLE	CABLE	
16	182101	2	TORNILLO	BOLT	BOULON	
17	3830	8	ARANDELA PLANA	PLAIN WASHER	RONDELLE PLANE	
18	181173	4	TUERCA	NUT	ECROU	
19	182124	2	TORNILLO	BOLT	ECROU	
20	182112	1	TORNILLO	BOLT	BOULON	
21	3821	1	ARANDELA PLANA	PLAIN WASHER	RONDELLE PLANE	
22	3074	1	ARANDELA	WASHER	RONDELLE	
23	181184	1	TUERCA	NUT	ECROU	
24	06860	1	GOMA	RUBBER	CAOUTCHOUC	
25	56666	1	CLIP	CLIP	CLIP	
26	237120	1	TORNILLO	BOLT	BOULON	
27	3816	1	ARANDELA PLANA	PLAIN WASHER	RONDELLE PLANE	
28	3073	1	ARANDELA	WASHER	RONDELLE	
29	180124	1	TUERCA	NUT	ECROU	
30	531324E1	1	ALOJAMIENTO	HOUSING	BOITE AIROTULE	

040396

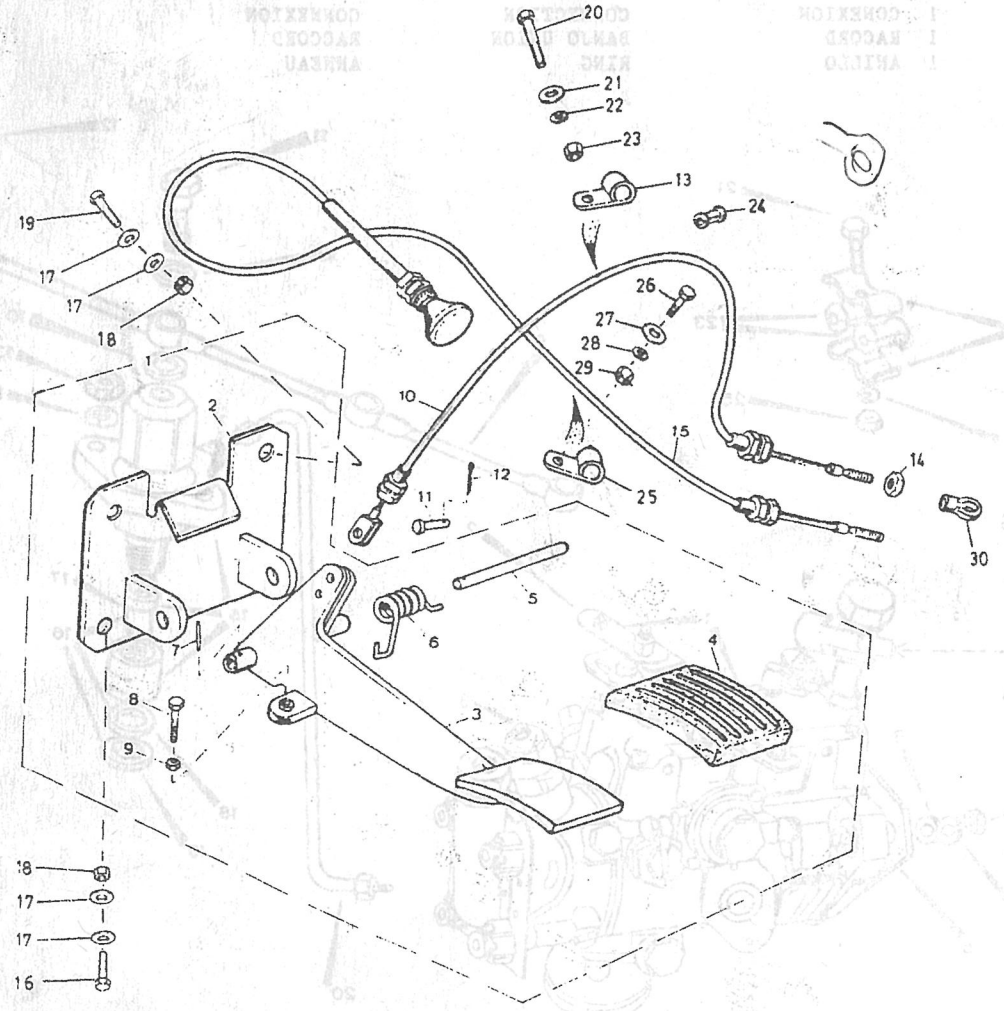

PUBLICACION N:790776 GRUPO=04 SISTEMA ALIMENTAC SUBGRUPO=BOMBA DE COMBUSTIBLE
EDICION N: 1 GROUP=04 FUEL SYSTEM SUBGROUP=FUEL PUMP
GROUPE=04 SYSTEM D'ALIMENTA SUBGROUPE=POMPE D ESSENCE

N.FIG PLATE N.FIG	N.PIEZA PARTNUMBER N.PIECE	CAN QTY OUT	DENOMINACION	DESCRIPTION	DENOMINATION	OBSERVACIONES
1	563146	1	BOMBA COMBUSTIBLE	FUEL PUMP	POMPE A ESSENCE	
2	275565	2	JUNTA	JOINT	JOINT	
3	NY108041	2	TUERCA	NUT	ECROU	
4	193775	1	JUEGO R BOMBA COMBUS	REPAIR KIT FUEL PUMP	JEU REPARAT POMPE ES	

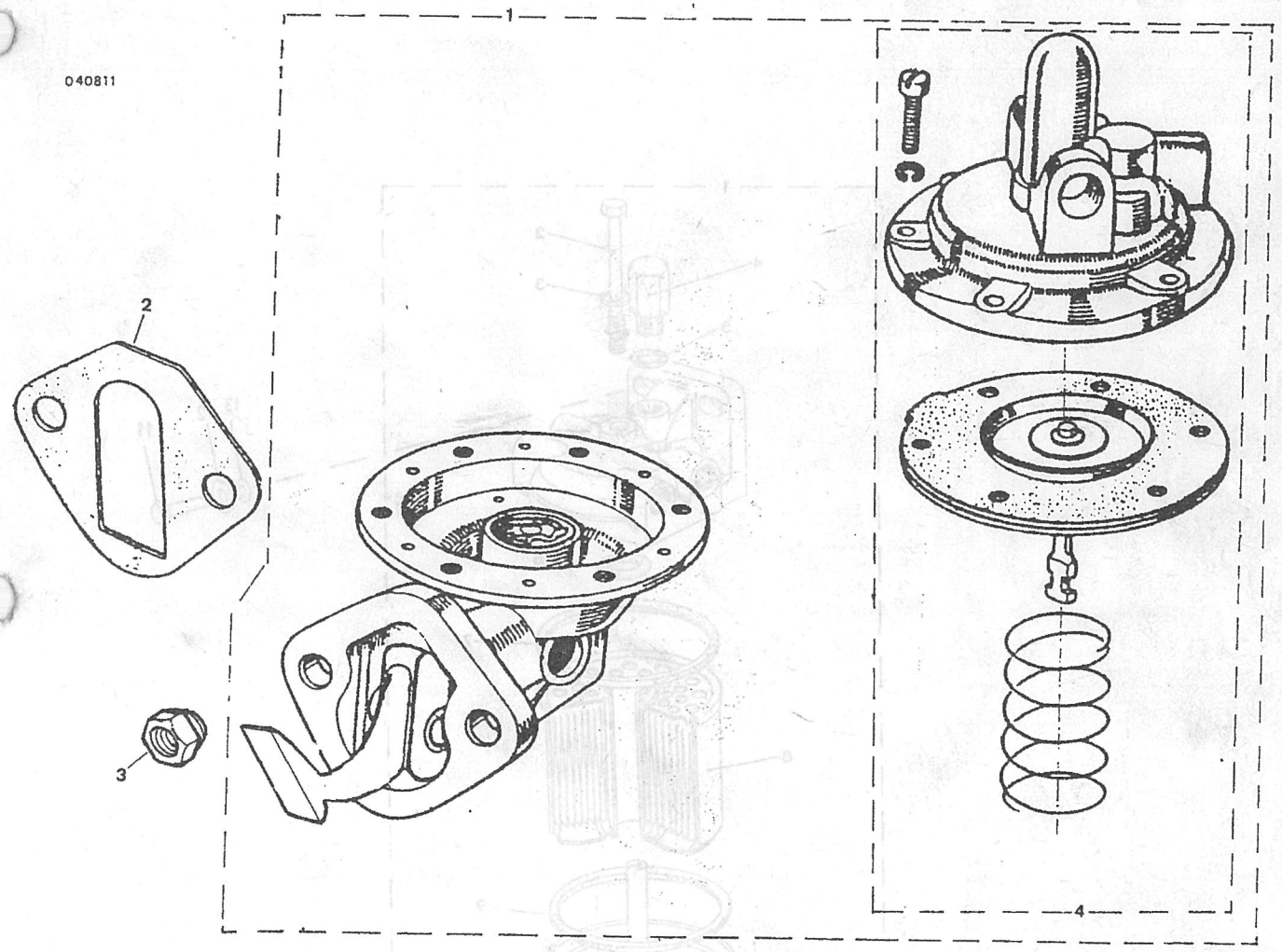

PUBLICACION N:790776 GRUPO=04 SISTEMA ALIMENTAC SUBGRUPO=FILTRO DE COMBUSTIBL
EDICION N: 1 GROUP=04 FUEL SYSTEM SUBGROUP=FUEL PUMP FILTRE
GROUPE=04 SYSTEM D'ALIMENTA SUBGROUPE=FILTRE DE CARBURANT

N.FIG PLATE N.FIG	N.PIEZA PARTNUMBER N.PIECE	CAN QTY OUT	DENOMINACION	DESCRIPTION	DENOMINATION	OBSERVACIONES
1	563190F1	1	FILTRO	FILTER	FILTRE	D 1-87
2	522939	1	TORNILLO	BOLT	BOULON	
3	522940	1	ARANDELA PLANA	PLAIN WASHER	RONDELLE PLANE	
4	505805	1	RACOR	RACORD	RACCORD	
5	184298	2	ARANDELA	WASHER	RONDELLE	
6	522937	1	ANILLO	RING	ANNEAU	
7	193715	1	JUNTA	JOINT	JOINT	
8	193492	1	JUEGO 50 FILTROS	KIT 50 FILTERS	JEU 50 FILTRES	
	517711	1	ELEMENTO FILTRO	FILTER ELEMENT	CARTOUCHE	
9	522938	2	JUNTA	JOINT	JOINT	
10	790245	1	TAPA	COVER	COUVERCLE	
11	SH108301	2	TORNILLO	BOLT	BOULON	
12	3830	2	ARANDELA PLANA	PLAIN WASHER	RONDELLE PLANE	
13	WM108001	2	ARANDELA	WASHER	RONDELLE	

040820

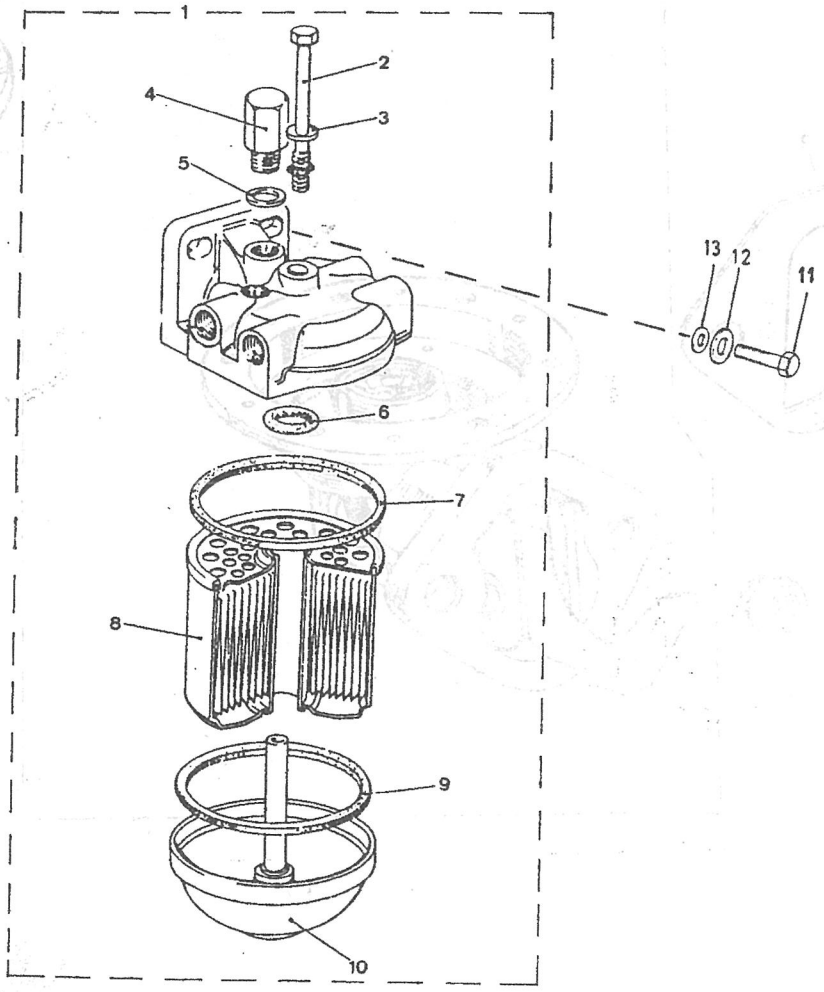

PUBLICACION N:790776 GRUPO=04 SISTEMA ALIMENTAC SUBGRUPO=TUBERIAS DE COMBUSTI
EDICION N: 1 GROUP=04 FUEL SYSTEM SUBGROUP=FUEL PIPES
GROUPE=04 SYSTEM D'ALIMENTA SUBGROUPE=TUYAU DE COMBUSTIBLE

N.FIG PLATE N.FIG	N.PIEZA PARTNUMBER N.PIECE	CAN QTY OUT	DENOMINACION	DESCRIPTION	DENOMINATION	OBSERVACIONES
1	500436	1	TUBO	PIPE	TUYAU	
2	500437	1	TUBO	PIPE	TUYAU	
3	161092	1	TUBO DEPOSITO COMBUS	PIPE FUEL TANK	TUYAU	
4	164026	1	TUBO	PIPE	TUYAU	
5	163406	4	ABRAZADERA	CLAMP	COLIIER	
6	240430	1	ABRAZADERA	CLAMP	COLLIER	
7	740203	2	CLIP	CLIP	CLIP	
8	740204	2	CLIP	CLIP	CLIP	
9	72626	5	TORNILLO	BOLT	BOULON	
10	8885	12	CLIP	CLIP	CLIP	
11	180124	1	TUERCA	NUT	ECROU	
12	3073	1	ARANDELA MUELLE	SPRING WASHER	RONDELLE RESSORT	
13	237121	1	TORNILLO	BOLT	BOULON	
14	740165	1	TUBO	PIPE	TUYAU	
15	740202	1	TUBO	PIPE	TUYAU	
16	717930	1	TUBO	PIPE	TUYAU	
17	717934	1	TUBO	PIPE	TUYAU	

040947

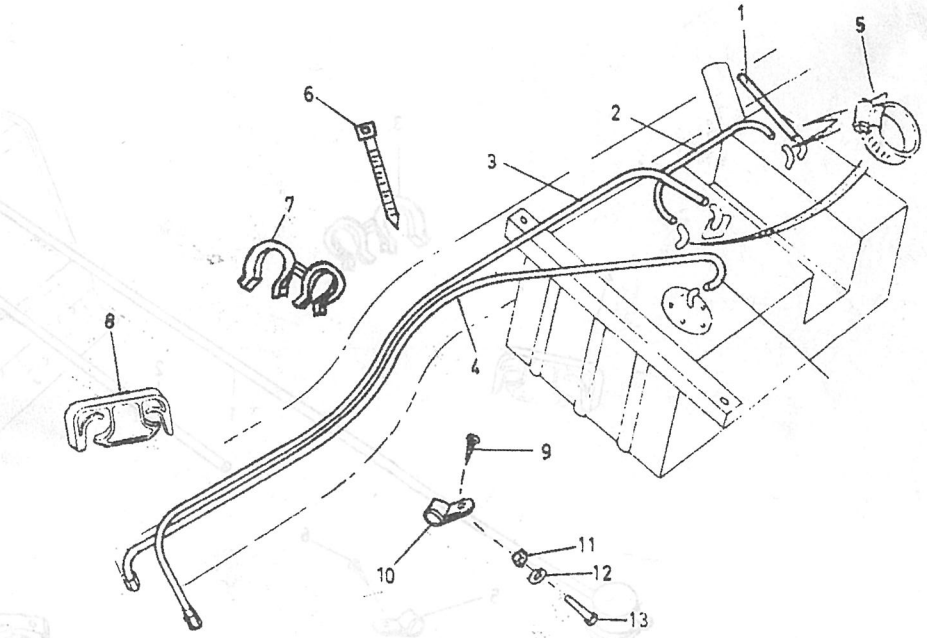

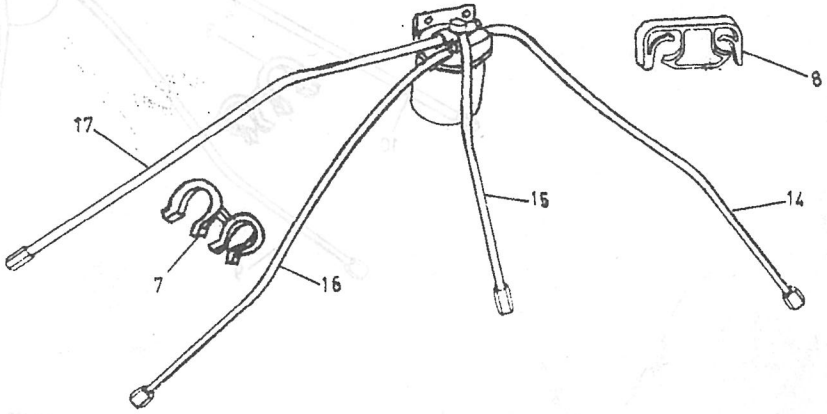

PUBLICACION N:790776 GRUPO=04 SISTEMA ALIMENTAC SUBGRUPO=TUBERIAS DE COMBUSTI
EDICION N: 1 GROUP=04 FUEL SYSTEM SUBGROUP=FUEL PIPES
GROUPE=04 SYSTEM D'ALIMENTA SUBGROUPE=TUYAU DE COMBUSTIBLE

N.FIG PLATE N.FIG	N.PIEZA PARTNUMBER N.PIECE	CAN QTY OUT	DENOMINACION	DESCRIPTION	DENOMINATION	OBSERVACIONES
1	552435E2	1	TUBO	PIPE	TUYAU	
2	164025	1	TUBO	PIPE	TUYAU	
3	740203	2	CLIP	CLIP	CLIP	
4	740204	2	CLIP	CLIP	CLIP	
5	8885	2	CLIP	CLIP	CLIP	
6	72626	1	TORNILLO	BOLT	BOULON	
7	740165	1	TUBO	PIPE	TUYAU	
8	740202	1	TUBO	PIPE	TUYAU	
9	717930	1	TUBO	PIPE	TUYAU	
10	717934	1	TUBO	PIPE	TUYAU	

040948

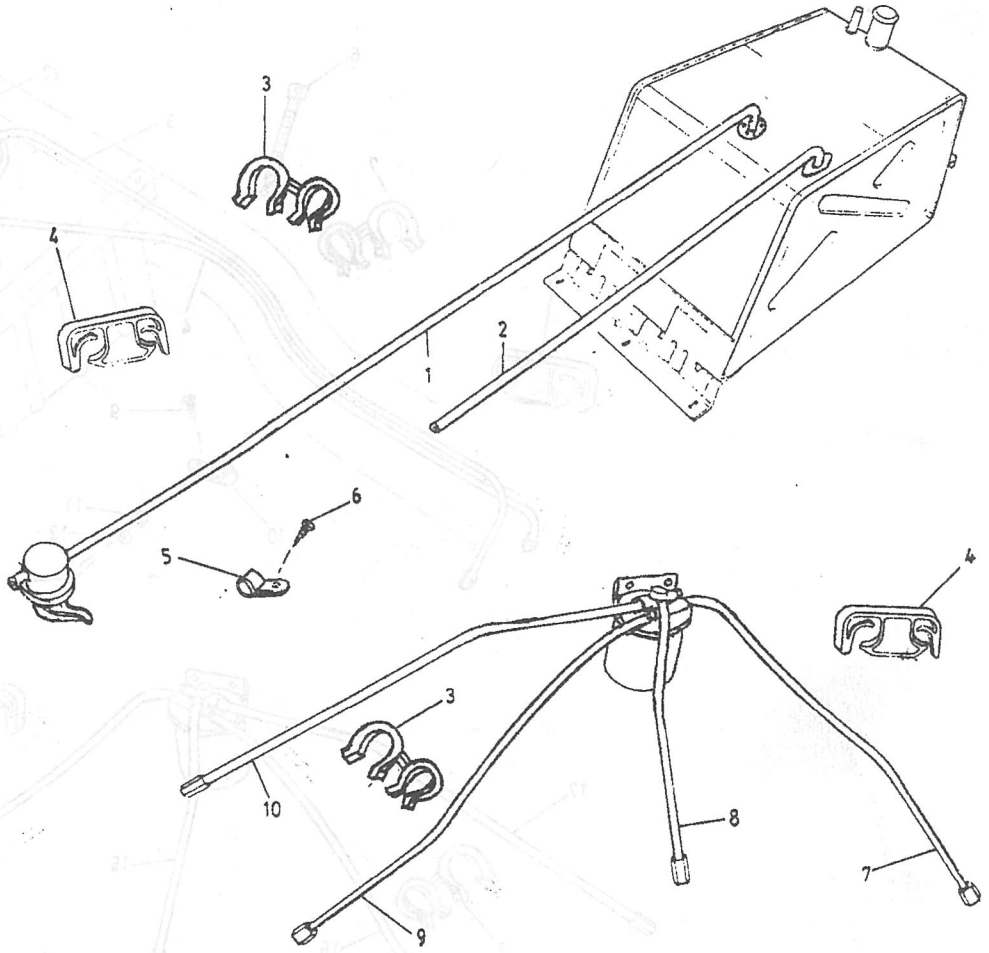

PUBLICACION N:790776 GRUPO=04 SISTEMA ALIMENTAC SUBGRUPO=DEPOSITO COMBUSTIBLE
EDICION N: 1 GROUP=04 FUEL SYSTEM SUBGROUP=FUEL TANK
GROUPE=04 SYSTEM D'ALIMENTA SUBGROUPE=RESERVOIR CARBURANT

N.FIG PLATE N.FIG	N.PIEZA PARTNUMBER N.PIECE	CAN QTY OUT	DENOMINACION	DESCRIPTION	DENOMINATION	OBSERVACIONES
1	740101	1	DEPOSITO 68 L	FUEL TANK 68 L	RESERVOIR DE CA 68 L	
2	740153	1	DEPOSITO 45 L	FUEL TANK 45 L	RESERVOIR DE CA 45 L	
3	NRC0062	1	TAPON	PLUG	BOUCHON	
4	243958	1	ARANDELA	GASKET	JOINT	

040998

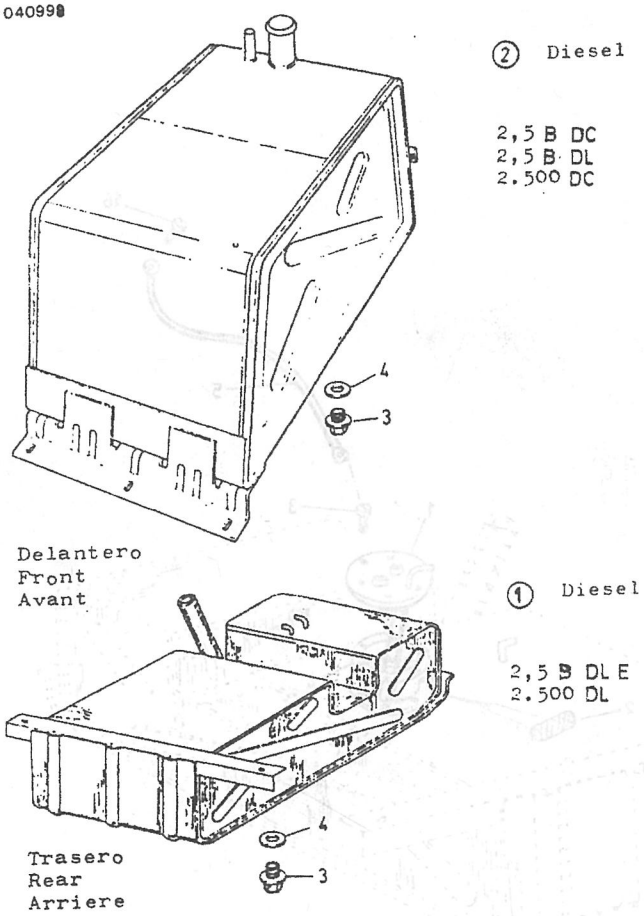

(2) Diesel

2,5 B DC
2,5 B DL
2.500 DC

(1) Diesel

2,5 B DL E
2.500 DL

PUBLICACION N:790776 GRUPO=04 SISTEMA ALIMENTAC SUBGRUPO=FIJACIONES DEPOSITOS
EDICION N: 1 GROUP=04 FUEL SYSTEM SUBGROUP=FUEL TANK ATTACMMENT
GROUPE=04 SYSTEM D'ALIMENTA SUBGROUPE=FIXAGE DE RESERVOIR

N.FIG PLATE N.FIG	N.PIEZA PARTNUMBER N.PIECE	CAN QTY OUT	DENOMINACION	DESCRIPTION	DENOMINATION	OBSERVACIONES
1	555844K3	1	AFORADOR	GAUGE	JAUGE	
2	193393	1	FILTRO	FILTRE	FILTER	
3	3890	5	TORNILLO	BOLT	BOULON	
	3972	1	TORNILLO	BOLT	BOULON	
4	56398E1	1	JUNTA	JOINT	JOINT	
5	176625	1	CABLE	CABLE	CABLE	
6	256241	2	TORNILLO	BOLT	BOULON	
7	2851	4	ARANDELA PLANA	PLAIN WASHER	RONDELLE PLANE	
8	508545	8	GOMA	RUBBER	CAOUTCHOUC	
9	500446	4	DISTANCIADOR	SPACER	ENTRETOISE	
10	180426	4	ARANDELA MUELLE	SPRING WASHER	RONDELLE RESSORT	
11	254812	2	TUERCA	NUT	ECROU	
12	501070K1	2	DISTANCIADOR	SPACER	ENTRETOISE	
13	166060	4	DISTANCIADOR	SPACER	ENTRETOISE	
14	168452	2	ESPARRAGO	STUD	GOUJON	
15	055266	2	ARANDELA	WASHER	RONDELLE	
16	72626	1	TORNILLO	BOLT	BOULON	

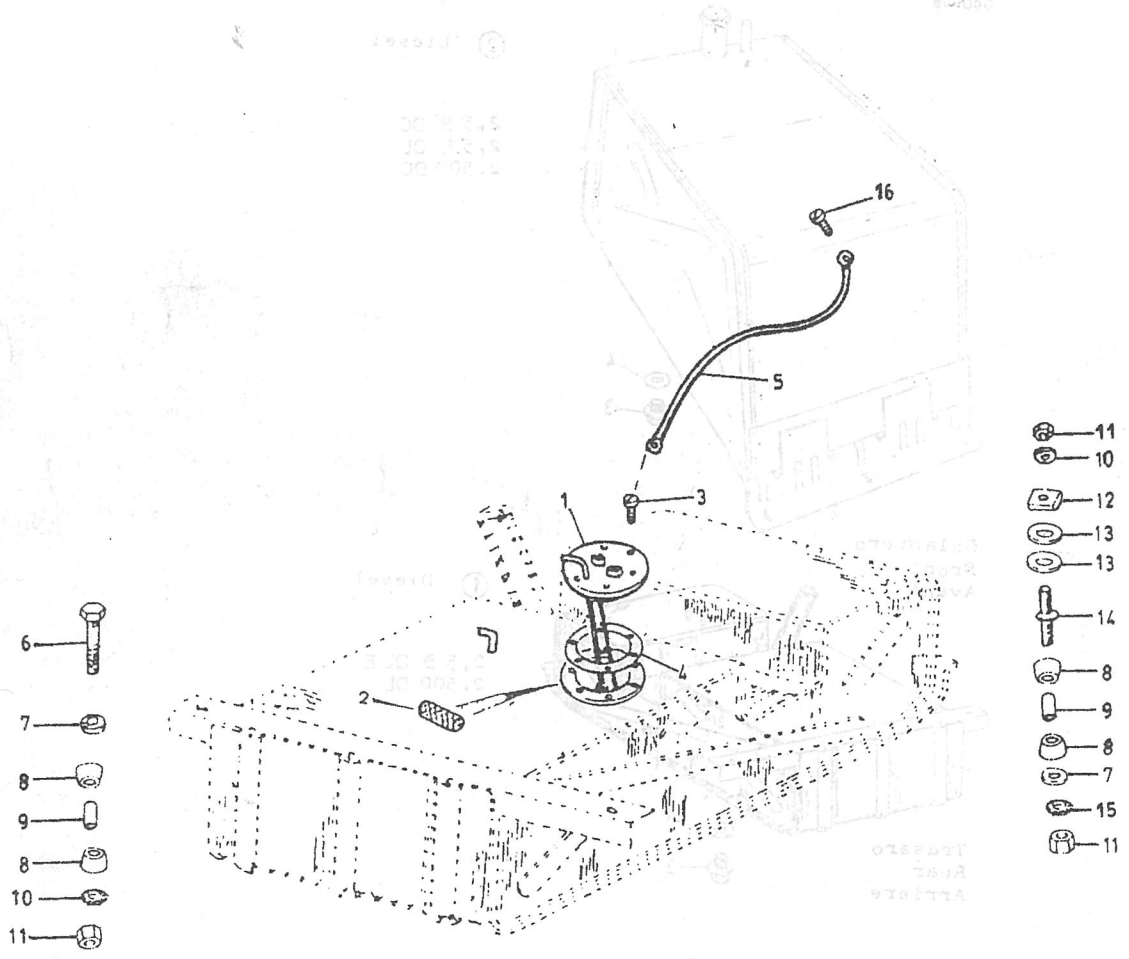

PUBLICACION N:790776 GRUPO=04 SISTEMA ALIMENTAC SUBGRUPO=FIJACIONES DEPOSITOS
EDICION N: 1 GROUP=04 FUEL SYSTEM SUBGROUP=FUEL TANK ATTACMMENT
GROUPE=04 SYSTEM D'ALIMENTA SUBGROUPE=FIXAGE RESERVOIR

N.FIG PLATE N.FIG	N.PIEZA PARTNUMBER N.PIECE	CAN QTY OUT	DENOMINACION	DESCRIPTION	DENOMINATION	OBSERVACIONES
1	555844K3	1	AFORADOR	GAUJE	JAUGE	
2	193393	1	FILTRO	FILTRE	FILTER	
3	3890	6	TORNILLO	BOLT	BOULON	
4	56398E1	1	JUNTA	JOINT	JOINT	
5	504233	1	JUNTA	JOINT	JOINT	
6	182101	2	TORNILLO	BOLT	BOULON	
7	3830	4	ARANDELA PLANA	PLAIN WASHER	RONDELLE PLANE	
8	054760	2	ARANDELA	WASHER	RONDELLE	
9	181185	2	TUERCA	NUT	ECROU	
10	254812	1	TUERCA	NUT	ECROU	
11	055266	1	ARANDELA	WASHER	RONDELLE	
12	501070K1	1	DISTANCIADOR	SPACER	ENTRETOISE	
13	508545	2	GOMA	RUBBER	CAOUTCHOUC	
14	500446	1	CASQUILLO	BUSH	BAGUE	
15	2851	1	ARANDELA PLANA	PLAIN WASHER	RONDELLE PLANE	
16	189509	1	TORNILLO	BOLT	BOULON	

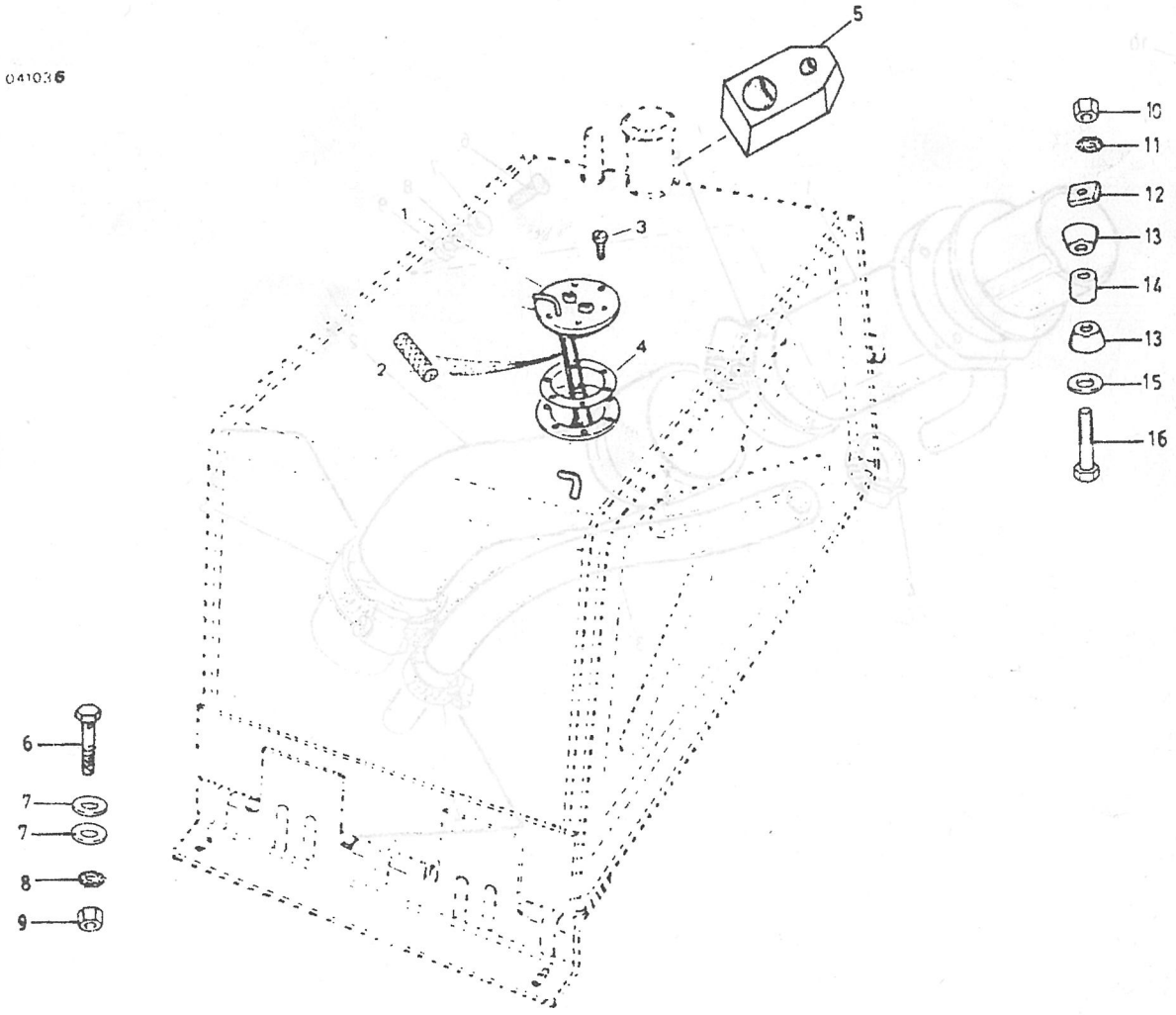

PUBLICACION N:790776 GRUPO-04 SISTEMA ALIMENTAC SUBGRUPO-BOCA DE LLENADO
EDICION N: 1 GROUP-04 FUEL SYSTEM SUBGROUP-FILLER TUBE
GROUPE-04 SYSTEM D'ALIMENTA SUBGROUPE-TUYAU TELESCOPIQUE

N.FIG PLATE N.FIG	N.PIEZA PARTNUMBER N.PIECE	CAN QTY OUT	DENOMINACION	DESCRIPTION	DENOMINATION	OBSERVACIONES
1	740099	1	CONJ. BOCA DE LLENAD	FILLER TUBE	ENS TUYAU	
2	163059	1	MANGUITO	HOSE	TUYAU	
3	500436	1	TUBO	TUBE	TUYAU	
4	163406	2	ABRAZADERA	CLAMP	ETRIER	
5	188401	2	ABRAZADERA	CLAMP	ETRIER	
6	313858	3	TORNILLO	BOLT	BOULON	
7	189484	3	ARANDELA	WASHER	RONDELLE	
8	3073	3	ARANDELA MUELLE	SPRING WASHER	RONDELLE RESSORT	
9	180124	3	TUERCA	NUT	ECROU	
10	740106	1	TAPON	PLUG	BOUCHON	

041113

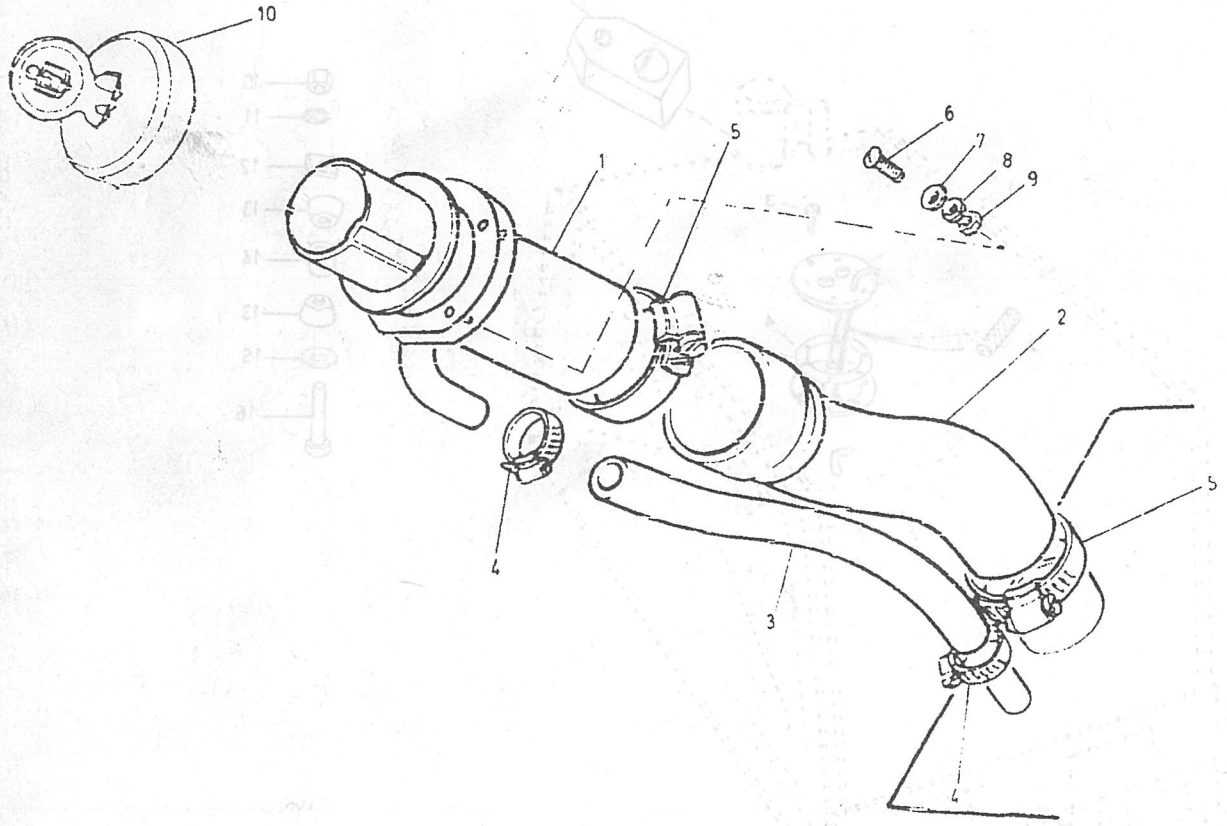

PUBLICACION N:790776 GRUPO=04 SISTEMA ALIMENTAC SUBGRUPO=BOCA DE LLENADO
EDICION N: 1 GROUP=04 FUEL SYSTEM SUBGROUP=FILLER TUBE
GROUPE=04 SYSTEM D'ALIMENTA SUBGROUPE=TUYAU TELESCOPIQUE

N.FIG PLATE N.FIG	N.PIEZA PARTNUMBER N.PIECE	CAN QTY OUT	DENOMINACION	DESCRIPTION	DENOMINATION	OBSERVACIONES
1	740104	1	BOCA LLENADO	FILLER TUBE	TUYAU TELESCOPIQUE	
2	543764	1	MANGUITO	HOSE	TUYAU	
3	543765	1	TUBO	TUBE	TUYAU	
4	163406	2	ABRAZADERA	CLAMP	ETRIER	
5	279653F1	1	ABRAZADERA	CLAMP	ETRIER	
6	188401	1	ABRAZADERA	CLAMP	ETRIER	
7	504233	1	JUNTA	JOINT	JOINT	
8	78248	9	REMACHE	RIVET	RIVET	
9	203811	S-N	JUNTA	JOINT	JOINT	
10	740106	1	TAPON	PLUG	BOUCHON	

041114

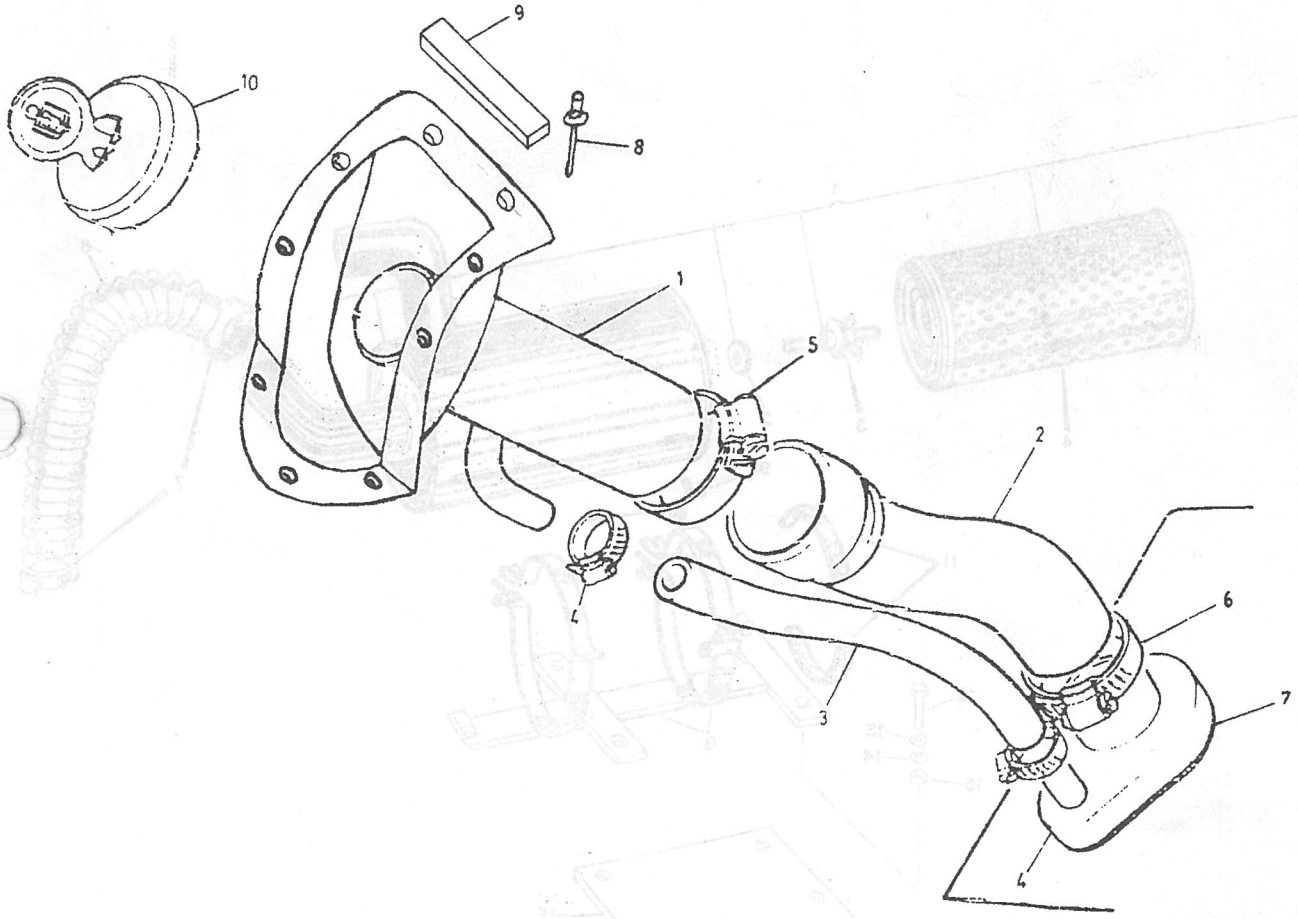

PUBLICACION N:790776 GRUPO=04 SISTEMA ALIMENTAC SUBGRUPO=FILTRO DE AIRE
EDICION N: 1 GROUP=04 FUEL SYSTEM SUBGROUP=AIR CLEAVER
GROUPE=04 SYSTEM D'ALIMENTA SUBGROUPE=FILTRE DE AIRE

N.FIG PLATE N.FIG	N.PIEZA PARTNUMBER N.PIECE	CAN QTY OUT	DENOMINACION	DESCRIPTION	DENOMINATION	OBSERVACIONES
1	113629	1	FILTRO DE AIRE	AIR CLEANER	FILTRE A AIR	
2	191889	1	JUNTA	JOINT	JOINT	
3	191888	1	ESPARRAGO	STUD	GOUJON	
4	193961	1	CARTUCHO MANN	MANN FILTER	FILTRE MANN	
5	191890	1	TAPA	COVER	COUVERCLE	
6	113415	1	MANGUITO 2500	MOSE 2500	MANCHON 2500	
7	279653F1	2	ABRAZADERA	CLAMP	COLLIER	
8	118407	1	SOPORTE FILTRO DE AI	AIR CLEANER SUPPORT	SUPPORT FILTRE A AIR	
9	250431	2	TUERCA	NUT	ECROU	
10	2876	2	ARANDELA PLANA	PLAIN WASHER	RONDELLE PLANE	
11	112871	4	JUNTA	JOINT	JOINT	
12	182113	4	TORNILLO 2'5-2500	BOLT 2'5-2500	BOULON 2'5-2500	
13	3946	4	ARANDELA PL 2'5-2500	PLAIN WASHE 2'5-2500	RONDELLE PL 2'5-2500	
14	3074	4	ARANDELA MUELLE	SPRING WASHER	RONDELLE ELASTIQUE	
15	181184	4	TUERCA	NUT	ECROU	
16	113366	1	PLACA	PLATE	PLAQUE	

041219

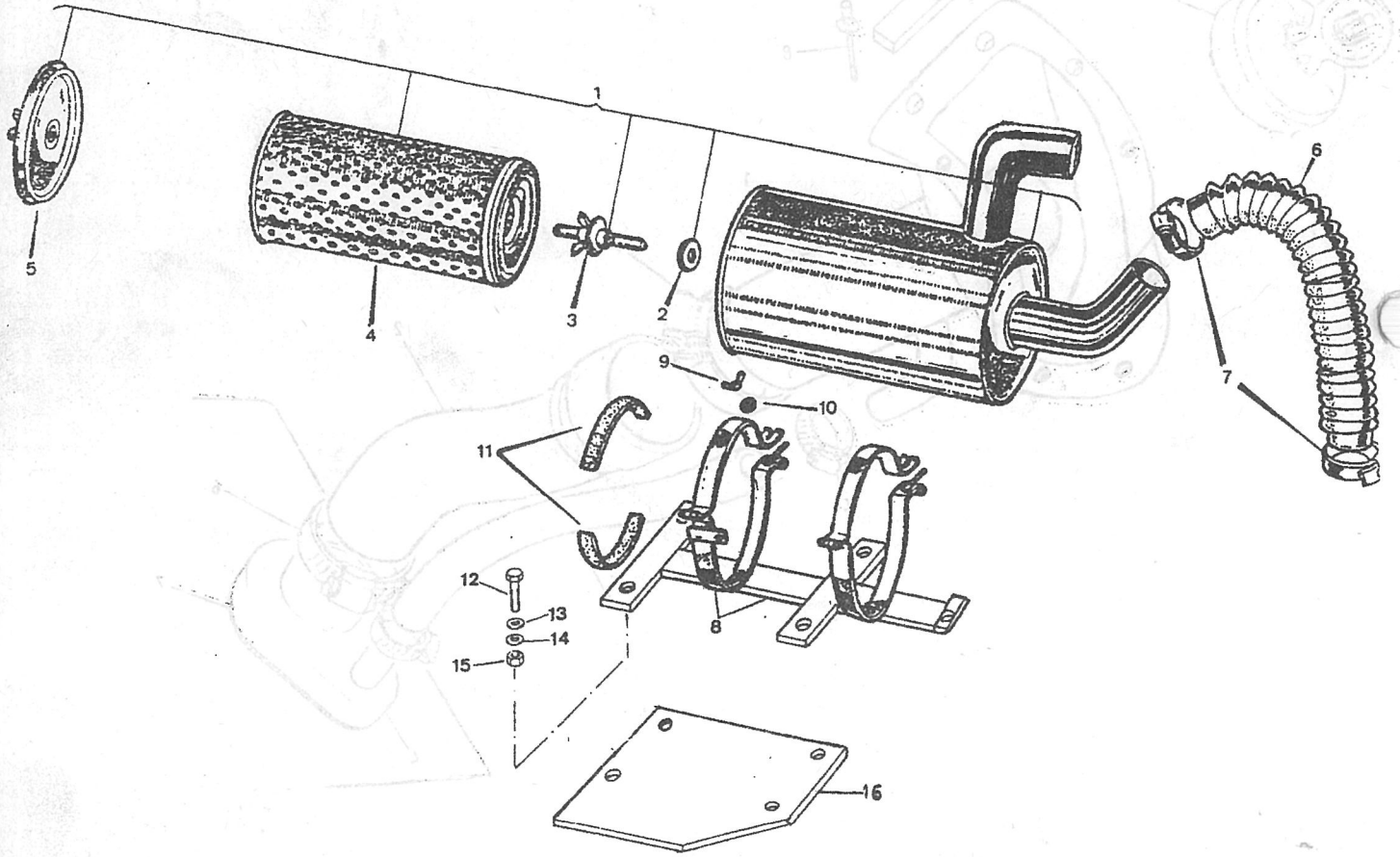

PUBLICACION N:790776 GRUPO-04 SISTEMA ALIMENTAC SUBGRUPO-COLECTORES
EDICION N: 1 GROUP-04 FUEL SYSTEM SUBGROUP-MANIFOLDS
GROUPE-04 SYSTEM D'ALIMENTA SUBGROUPE-COLLECTEURS

N.FIG PLATE N.FIG	N.PIEZA PARTNUMBER N.PIECE	CAN QTY OUT	DENOMINACION	DESCRIPTION	DENOMINATION	OBSERVACIONES
1	118243	1	COLECTOR	INLET MANIFOLD	COLLECTEUR D ADMISIO	
2	165380	1	TAPON	PLUG	BOUCHON	
3	113114	1	JUNTA	GASKET	JOINT	
4	NH108041	9	TUERCA	NUT	ECROU	
5	WL108001	9	ARANDELA	WASHER	RONDELLE	
6	2550	5	ARANDELA	WASHER	RONDELLE	
7	564308	4	ABRAZADERA	CLAMP	ETRIER	
8	ERC9689	1	COLECTOR ESCAPE	EXHAUST MANIFOLD	COLLECT D ECHAPPEMEN	
9	AFU1848	3	ESPARRAGO	STUD	GOUJON	

041405

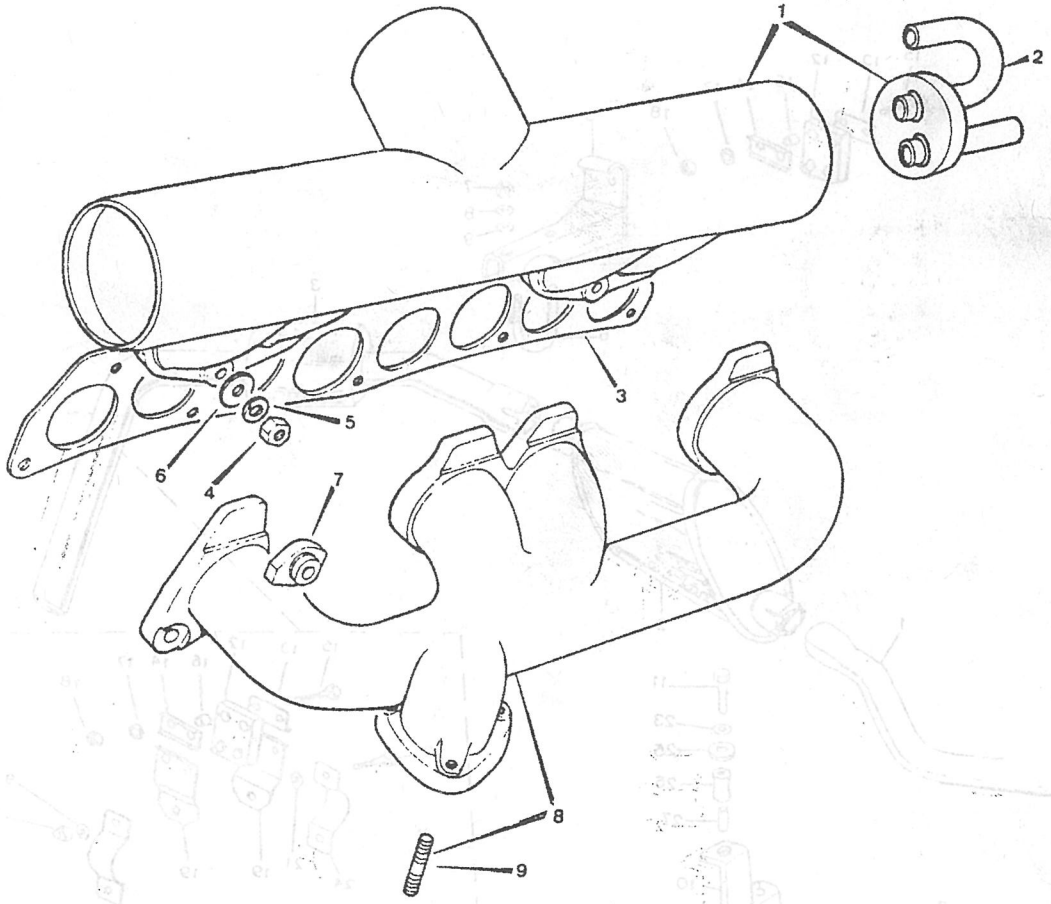

PUBLICACION N:790776 GRUPO=04 SISTEMA ALIMENTAC SUBGRUPO=TUBOS DE ESCAPE
EDICION N: 1 GROUP=04 FUEL SYSTEM SUBGROUP=EXAUST PIPE
GROUPE=04 SYSTEM D'ALIMENTA SUBGROUPE=TUYAUS D'ECHAPPEMENT

N.FIG PLATE N.FIG	N.PIEZA PARTNUMBER N.PIECE	CAN QTY OUT	DENOMINACION	DESCRIPTION	DENOMINATION	OBSERVACIONES
1	165950	1	TUBO DELANTERO	FRONT PIPE	TUYAU AVANT	
2	165948	1	TUBO INTERMEDIO	INTERMEDIATE PIPE	TUYAU INTERMEDIAIRE	
3	165992	1	TUBO TRASERO	REAR PIPE	TUYAU ARRIERE	
4	164624	3	TUERCA	NUT	ECROU	
5	165958	1	SOPORTE	SUPPORT	SUPPORT	
6	165952	2	ABARCON	V BOLT	BRIDE	
7	NH108041	5	TUERCA	NUT	ECROU	
8	054760	5	ARANDELA	WASHER	RONDELLE	
9	587405	4	ARANDELA PLANA	PLAIN WASHER	RONDELLE PLANE	
10	165957	1	SOPORTE	SUPPORT	SUPPORT	
11	BH108101	1	TORNILLO	BOLT	BOULON	
12	592778	2	SOPORTE	SUPPORT	SUPPORT	
13	245926	2	PLACA	PLATE	PLAQUE	
14	239715	2	PLACA	PLATE	PLAQUE	
15	255209	8	TORNILLO	BOLT	BOULON	
16	244009	8	DISTANCIADOR	SPACER	ENTRETOISE	
17	3946	4	ARANDELA PLANA	PLAIN WASHER	RONDELLE PLANE	
18	252220	8	TUERCA	NUT	ECROU	
19	239710	2	PLACA	PLATE	PLAQUE	
20	182103	2	TORNILLO	BOLT	BOULON	
21	3899	2	ARANDELA PLANA	PLAIN WASHER	RONDELLE PLANE	
22	181185	2	TUERCA	NUT	ECROU	
23	2258	2	ARANDELA	WASHER	RONDELLE	
24	562823	2	ABRAZADERA	CLAMP	ETRIER	
25	71494-80001	2	GOMA	RUBBER	CAOUTCHOUC	
26	508896E2	1	GOMA	RUBBER	CAOUTCHOUC	
27	165953	1	DISTANCIADOR	SPACER	ENTRETOISE	

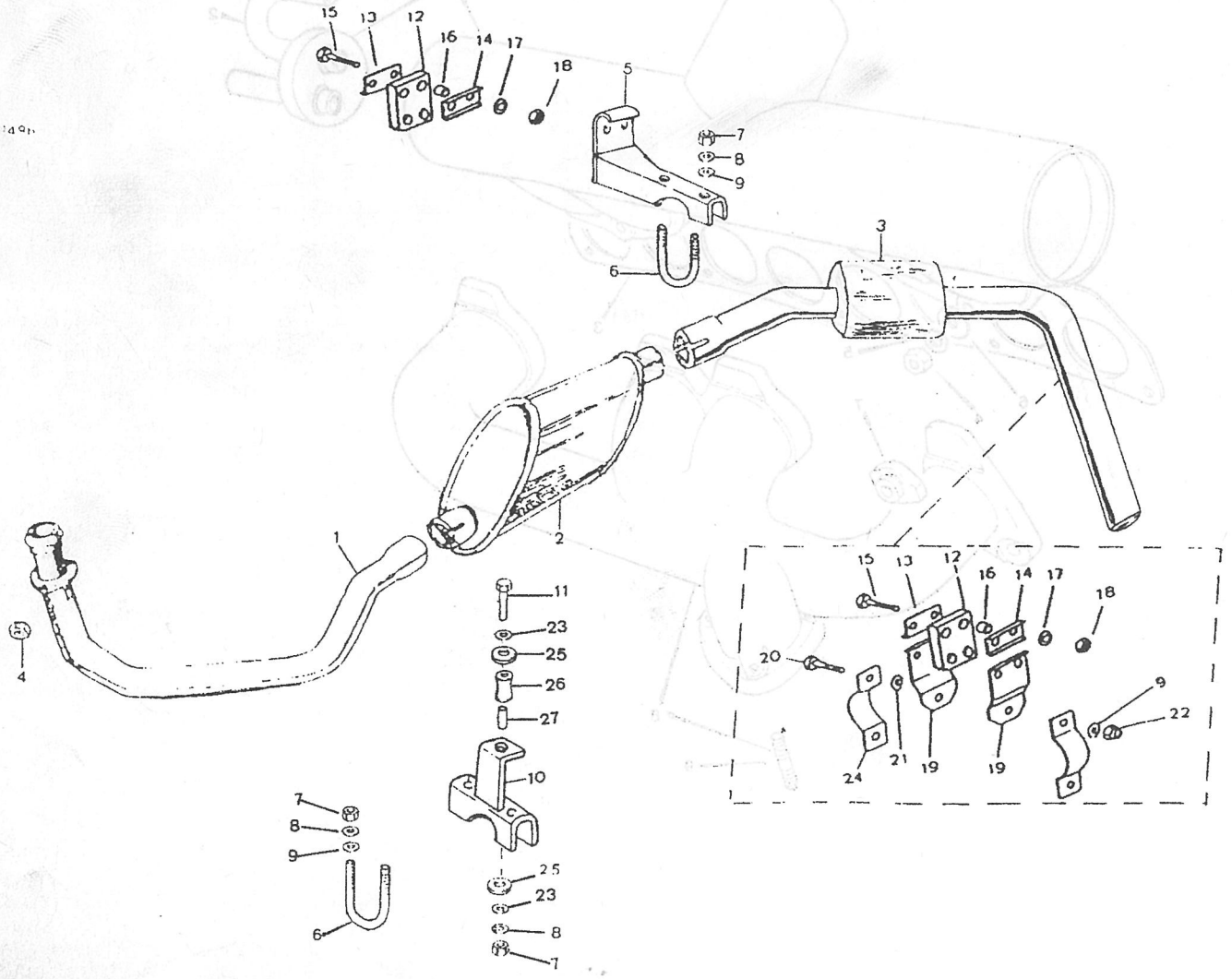

PUBLICACION N:790776 GRUPO=04 SISTEMA ALIMENTAC SUBGRUPO=TUBOS DE ESCAPE
EDICION N: 1 GROUP=04 FUEL SYSTEM SUBGROUP=EXAUST PIPE
GROUPE=04 SYSTEM D'ALIMENTA SUBGROUPE=TUYAUS D'ECHAPPEMENT

N.FIG PLATE N.FIG	N.PIEZA PARTNUMBER N.PIECE	CAN QTY OUT	DENOMINACION	DESCRIPTION	DENOMINATION	OBSERVACIONES
1	165950	1	TUBO DELANTERO	FRONT PIPE	TUYAU AVANT	
2	165995	1	TUBO INTERMEDIO	INTERMEDIATE PIPE	TUYAN INTERMEDIAIRE	
3	165948	1	SILENCIADOR	SILENCER	SILENCIEUX	
4	165996	1	TUBO TRASERO	REAR PIPE	TUYAN ARRIERE	
5	164624	3	TUERCA	NUT	ECROU	
6	183236	3	TORNILLO	BOLT	BOULON	
7	163960	3	BRIDA	CLAMP	ETRIER	
8	587405	6	ARANDELA PLANA	PLAIN WASHER	RONDELLE PLANE	
9	WM108001	8	ARANDELA	WASHER	RONDELLE	
10	181181	3	TUERCA	NUT	ECROU	
11	239711	2	BRIDA	CLAMP	ETRIER	
12	592778	3	SOPORTE	SUPPORT	SUPPORT	
13	245926	3	PLACA	PLATE	PLAQUE	
14	239715	3	PLACA	PLATE	PLAQUE	
15	255209	13	TORNILLO	BOLT	BOULON	
16	244009	12	DISTANCIADOR	SPACER	ENTRETOISE	
17	3946	6	ARANDELA PLANA	PLAIN WASHER	RONDELLE PLANE	
18	252220	12	TUERCA	NUT	ECROU	
19	239710	4	PLACA	PLATE	PLAQUE	
20	182103	5	TORNILLO	BOLT	BOULON	
21	3899	6	ARANDELA PLANA	PLAIN WASHER	RONDELLE PLANE	
22	181185	5	TUERCA	NUT	ECROU	
23	559705	2	PLACA	PLATE	PLAQUE	
24	562823	4	BRIDA	CLAMP	ETRIER	
25	3074	1	ARANDELA MUELLE	SPRING WASHER	RONDELLE ELASTIQUE	
26	181184	1	TUERCA	NUT	ECROU	

041497

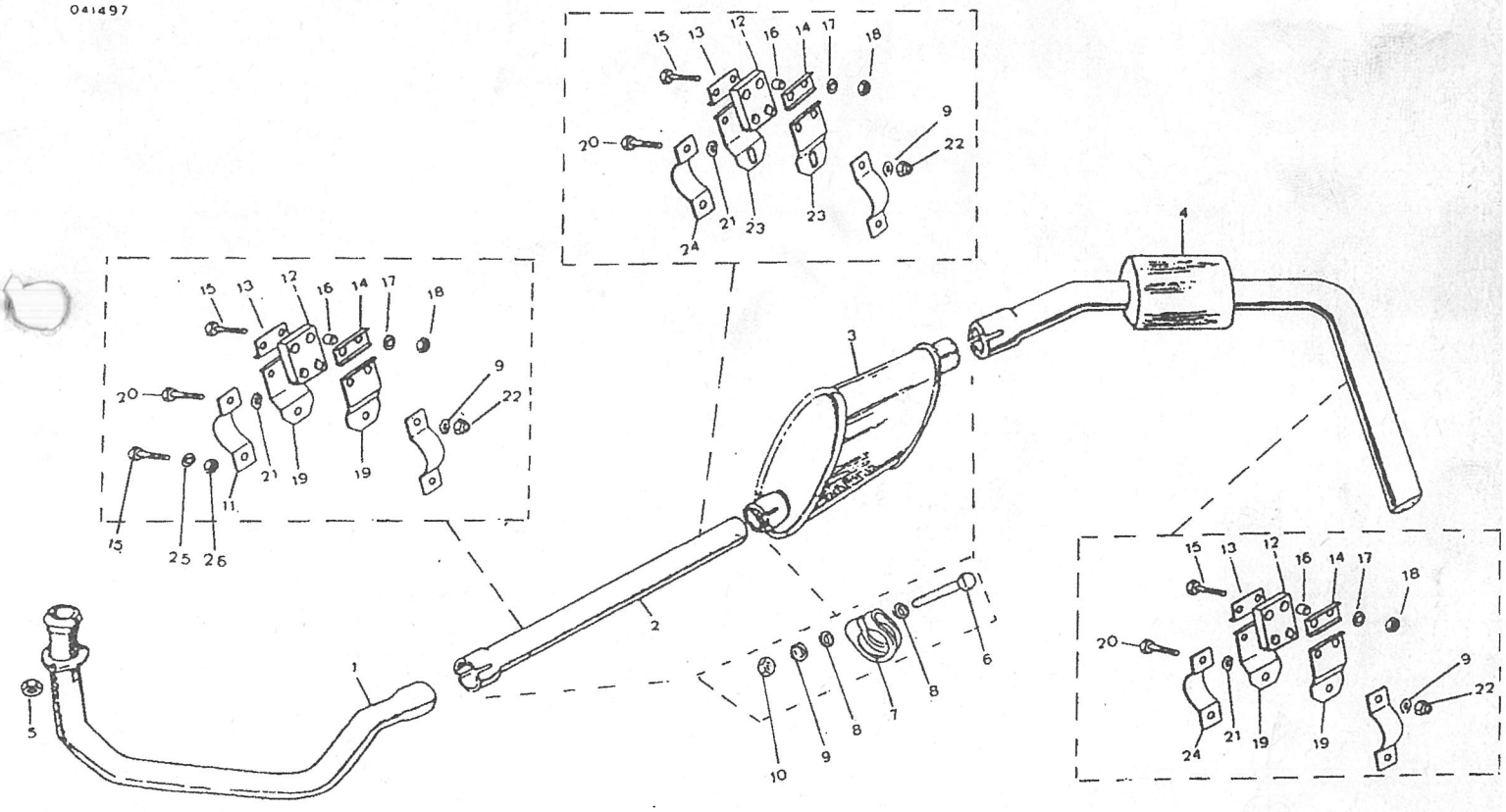

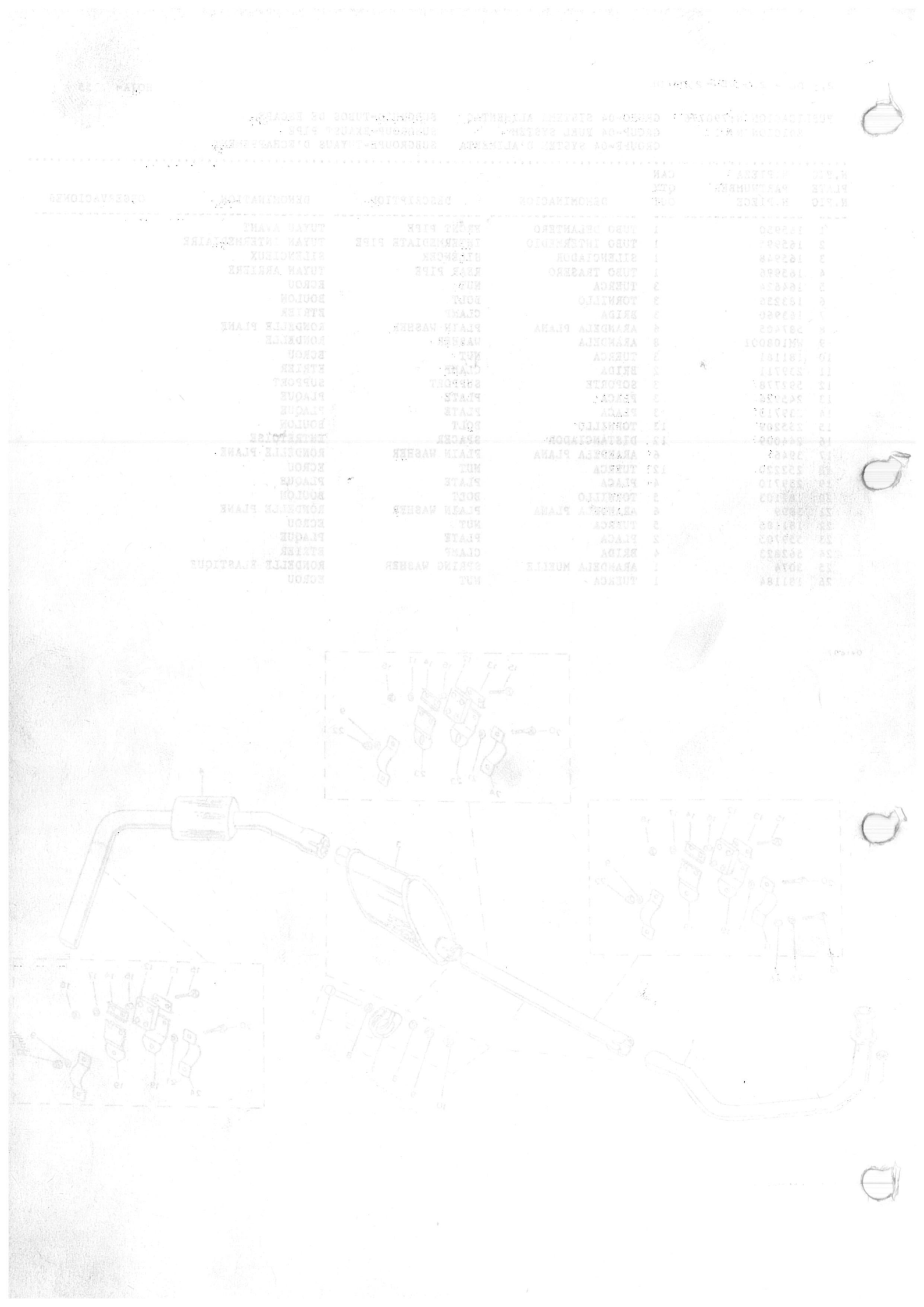

GRUPO 05 05 SISTEMA ELECTRICO

GROUP 05 05 ELECTRICAL SYSTEM

GROUP 05 05 SYSTEME ELECTRIQU

COMPOSICION.....COMPOSITION.....COMPOSICION

REFERENCIA PARTNUMBER NUM.PIECE	DENOMINACION	DESCRIPTION	DENOMINATION
050123	CABLEADOS	CABLES	CABLES
050216	BATERIA	BATTERY	BATTERIE
050307	EQUIPO GENERAL	GENERAL EQUIPMENT	EQUIPE GENERALE
050502	LIMPIAPARABRISAS	WINDSCREEN	ESSUIE GLACE
050509	LIMPIAPARABRISAS	REAR WINDSCREEN	ESSUIE GLACE ARRIERE
050618	BUJIAS DE CALDEO	MEATING SPARK PLUGS	BOUGIE D CHALDEEN
050716	ALTERNADOR	ALTERNATOR	ALTERNATEUR
050717	ALTERNADOR MAGN.MARE	ALTERNATOR MAGN.MARE	ALTERNATEUR MAG.MARE
050806	SOPORTE ALTERNADOR	ALTERNATOR SUPPORT	SUPPORT ALTERNATEUR
050807	SOPORTE ALTERNADOR	ALTERNATOR SUPPORT	SUPPORT D'ALTERNATEU
050905	MOTOR DE ARRANQUE	STARTER MOTOR	DEMARREUR
050906	MOTOR ARRANQUE BOSCH	STARTER MOTOR BOSCH	DEMARREUR BOSCH
051024	FAROS Y PILOTOS	MEAD LAMPS	PHARES ET FEUS

PUBLICACION N:790776 GRUPO-05 SISTEMA ELECTRICO SUBGRUPO-CABLEADOS
EDICION N: 1 GROUP-05 ELECTRICAL SYSTEM SUBGROUP-CABLES
GROUPE-05 SYSTEME ELECTRIQU SUBGROUPE-CABLES

N.FIG PLATE N.FIG	N.PIEZA PARTNUMBER N.PIECE	CAN QTY OUT	DENOMINACION	DESCRIPTION	DENOMINATION	OBSERVACIONES
1	175764	1	CABLE SALPICADERO	DASH MARNESS	CABLAGE TABLIER	
2	166667	1	CABLEADO SALPICADERO	DASH MARNESS	CABLEAGE TABLIER	H 3 - 91
	176702	1	CABLEADO SALPICADERO	DASH MARNESS	CABLEAGE TABLIER	D 4 - 91
3	176729	1	CABLE CHASIS	FRAME HARNESS	CABLAGE CHASSIS	
4	176730	1	CABLE CHASIS	FRAME HARNESS	CABLEAGE CHASSIS	
5	176728	1	CABLE CHASIS	FRAME HARNESS	CABLEAGE CHASSIS	
6	176703	1	CABLE CHASIS	FRAME HARNESS	CABLEAGE CHASSIS	
7	176704	1	CABLE CHASIS	FRAME HARNESS	CABLEAGE CHASSIS	
8	176702	1	CABLEADO SALPICADERO	DASH MARNESS	CABLEAGE TABLIER	H CHASIS 123576
	176702-1	1	CABLEADO SALPICADERO	DASH MARNESS	CABLEAGE TABLIER	D CHASIS 123577

050123

	2'5 DC	2'5 DL	2'5 DE	2500 DC	2500 DL
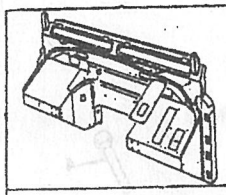	1	1	1	8	2
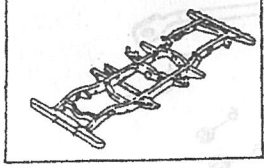	3	4	5	6	7

PUBLICACION N:790776 GRUPO=05 SISTEMA ELECTRICO SUBGRUPO=BATERIA
EDICION N: 1 GROUP=05 ELECTRICAL SYSTEM SUBGROUP=BATTERY
GROUPE=05 SYSTEME ELECTRIQU SUBGROUPE=BATTERIE

N.FIG PLATE N.FIG	N.PIEZA PARTNUMBER N.PIECE	CAN QTY OUT	DENOMINACION	DESCRIPTION	DENOMINATION	OBSERVACIONES
1	575474F1	1	BATERIA 2,5-2500	BATTERY 2,5-2500	BATTERI 2,5.2500	
2	166572	1	CABLE 2,5-2500	CABLE 2,5-2500	CABLE 2,5-2500	
3	233566	2	GOMA	RUBBER	CAOUTCHOUC	
4	255208	1	TORNILLO	BOLT	BOULON	
5	3840	1	ARANDELA	WASHER	RONDELLE	
6	052257	1	ARANDELA	WASHER	RONDELLE	
7	252220	1	TUERCA	NUT	ECROU	
8	RTC0602	1	CLIP	CLIP	CLIP	
9	166554	1	CABLE	CABLE	CABLE	
10	531672E1	1	CABLE	CABLE	CABLE	

050216

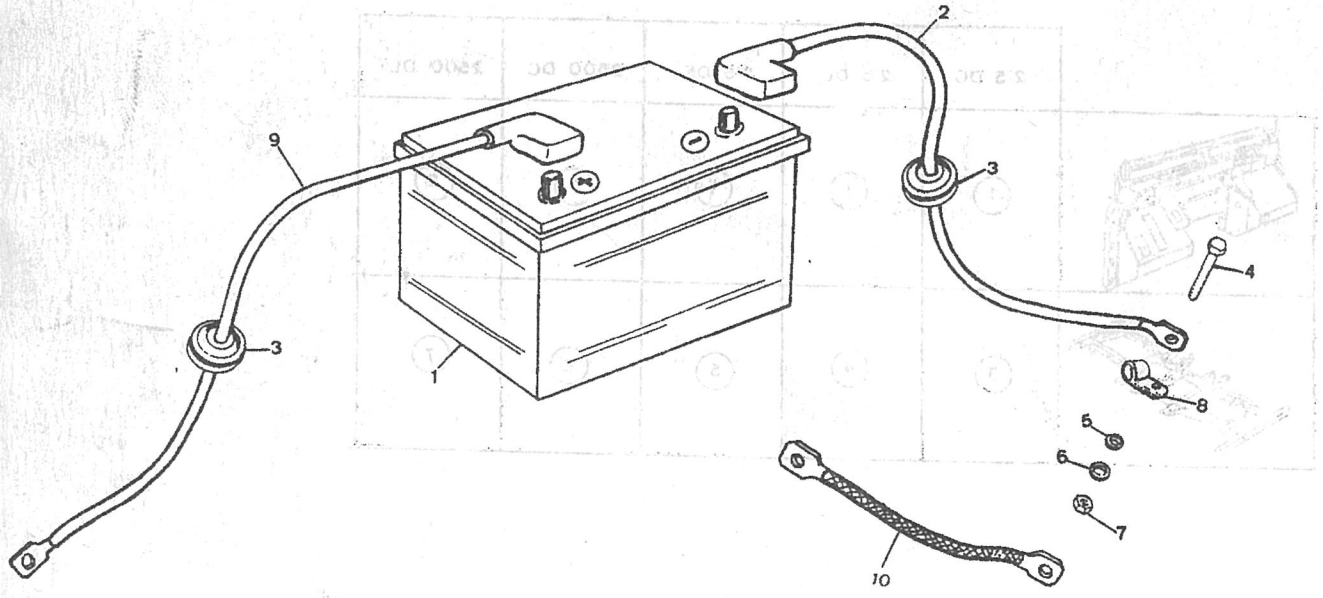

PUBLICACION N:790776 GRUPO=05 SISTEMA ELECTRICO SUBGRUPO=EQUIPO GENERAL
EDICION N: 1 GROUP=05 ELECTRICAL SYSTEM SUBGROUP=GENERAL EQUIPMENT
GROUPE=05 SYSTEME ELECTRIQU SUBGROUPE=EQUIPE GENERALE

N.FIG PLATE N.FIG	N.PIEZA PARTNUMBER N.PIECE	CAN QTY OUT	DENOMINACION	DESCRIPTION	DENOMINATION	OBSERVACIONES
1	162576	1	BOCINA AGUDA	WINDTONE HONER HIGH	AVERTISSEUR AIGU	
2	162575	1	BOCINA GRAVE	WINDTONE HONER LOW	AVERTISSEUR BASSE	
3	160069	1	SOPORTE	BRACKET	SUPPORT	
4	182113	2	TORNILLO	SCREW	VIS	
5	3074	2	ARANDELA MUELLE	SPRING WASHER	RONDELLE RESSORT	
6	3900	2	ARANDELA PLANA	PLAIN WASHER	RONDELLE PLANE	
7	181184	2	TUERCA	NUT	ECROU	
8	178702	1	CABLE	CABLE	CABLE	
9	38610D78303	1	RELE INTERMITENCIA	FLASHER RELAY	RELE CLIGNOTEUR	
10	38610G78303	1	RELE INTERMITENCIA	FLASHER RELAY	RELE CLIGNOTEUR	
11	579202	1	RELE DE CALENT LUCAS	RELAY FOR RESI LUCAS	RELE DE RESIST LUCAS	
12	185254	2	TORNILLO	BOLT	BOULON	
13	3816	2	ARANDELA PLANA	PLAIN WASHER	RONDELLE PLANE	
14	180108	2	TUERCA	NUT	ECROU	
15	054760	2	ARANDELA	WASHER	RONDELLE	
16	165535	2	PLAFON	INT LAMP	FEU INTERIEUR	
17	194309	2	PLASTICO	LENS	VERRE	
18	166579	2	BOMBILLA 12V 5W	BULB 12V 5W	LAMPE 12V 5W	
19	79156	4	TORNILLO	BOLT	BOULON	
20	166674	1	CABLE	CABLE	CABLE	
21	166772	1	CABLE	CABLE	CABLE	
22	173765	1	ENCHUFE REMOLQUE	TRAILER CUTTING	COUPLER DE REMORQUAG	
23	173766	1	CLAVIJA	COTTER PIN	FICHE DE CONEXION	
24	78485	1	TORNILLO	BOLT	BOULON	
25	054959	1	ARANDELA	WASHER	RONDELLE	
26	161852	1	INTERRU.LUZ M.ATRAS	CLEARANCE BACK-UP SW	INTERRUPTEUR FEU ARR	2'5 ESPECIAL
27	030454	2	ARANDELA	WASHER	RONDELLE	
28	087912	1	TUERCA	NUT	ECROU	

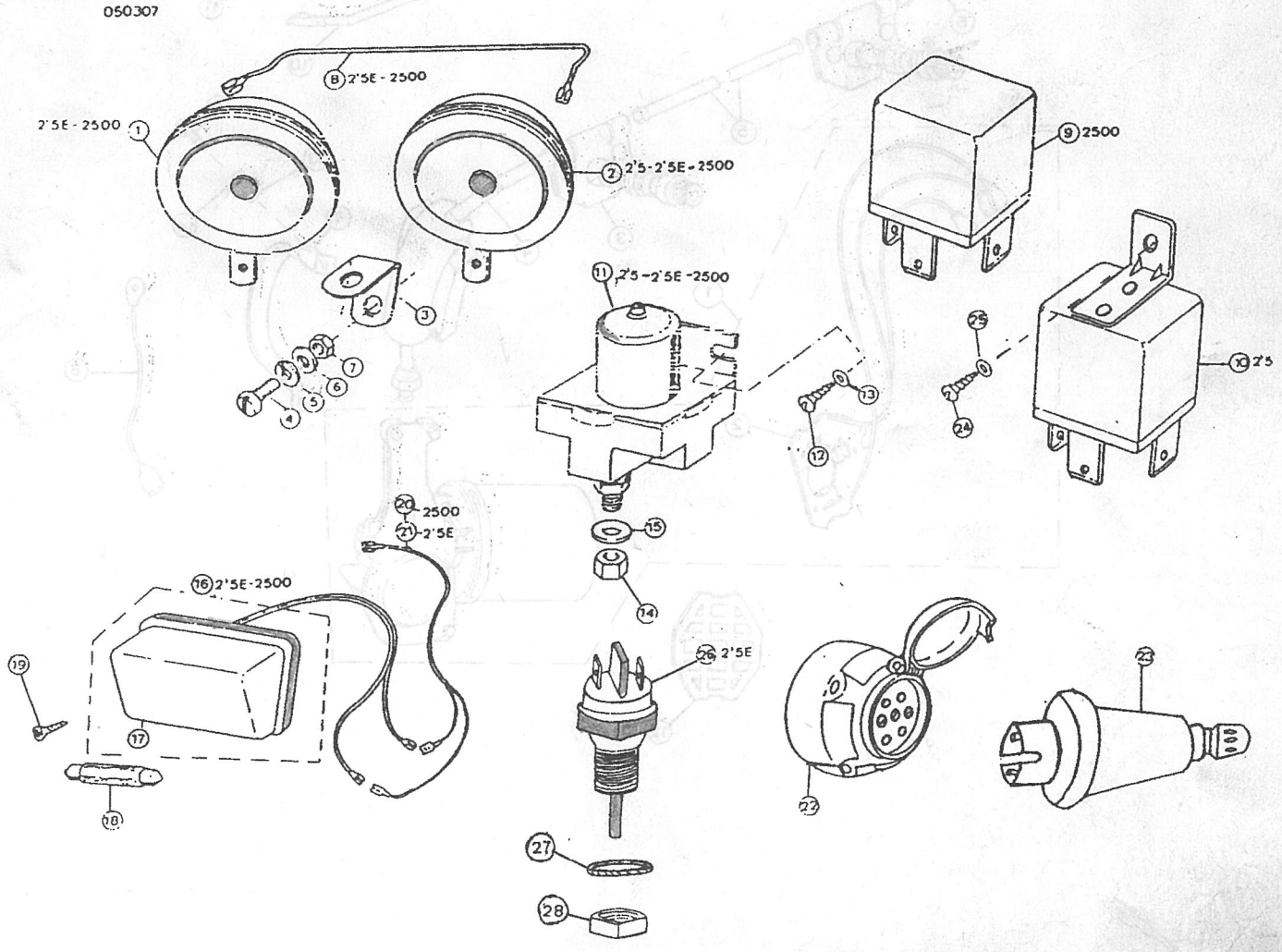

PUBLICACION N:790776 GRUPO=05 SISTEMA ELECTRICO SUBGRUPO=LIMPIAPARABRISAS
EDICION N: 1 GROUP=05 ELECTRICAL SYSTEM SUBGROUP=WINDSCREEN
GROUPE=05 SYSTEME ELECTRIQU SUBGROUPE=ESSUIE GLACE

N.FIG PLATE N.FIG	N.PIEZA PARTNUMBER N.PIECE	CAN QTY OUT	DENOMINACION	DESCRIPTION	DENOMINATION	OBSERVACIONES
1	PRC4174	1	MOTOR LIMPIACRISTAL	WIPER MOTOR ASSY	MOTEUR ESSVIE GLACE	
2	RTC198	1	JUEGO ESCOBILLAS	BRUSH SET	JEU BALAI	
3	PRC8495	2	CONJ.CAJA RUEDAS	WHEEL BOX ASSY	BOITIER DE ROVE	
4	PRC3672	1	TUBO MOTOR A CAJA RV	TUBE-MOTOR TO WHEELS	TUYAU MOTEUR-BOITIER	
5	PRC2471	1	TUBO CAJA RUEDA A CA	TUBE-WHEEL BOX TO WH	TUYAU BOITIER DE ROU	
6	575047	1	TUBO CAJA DE RUEDA F	TUBE-WHEEL BOX END	TUYAU BOITIER DE ROU	
7	BHA4790	1	ABRAZADERA	STRAP ASSY	BRIDE	
8	166777	1	CABLE	CABLE	CABLE	2500DL-2500DC
9	78709	2	TORNILLO	SCREW	VIS	
10	166735	2	BRAZO LIMPIAPARABRIS	WIPER ARM	BRAS DE BALAI	
11	166734	2	ESCOBILLA	WIPER BLADE	BALDI DESSUIE-GLACE	
12	150844	1	GOMA AMORTIGUADORA	PAD	COOUTCHOUC DE CHOC	
13	181184	2	TUERCA	NUT	ECROU	
14	052257	2	ARANDELA MUELLE	SPRING WASHER	RONDELLE RESSORT	

050502

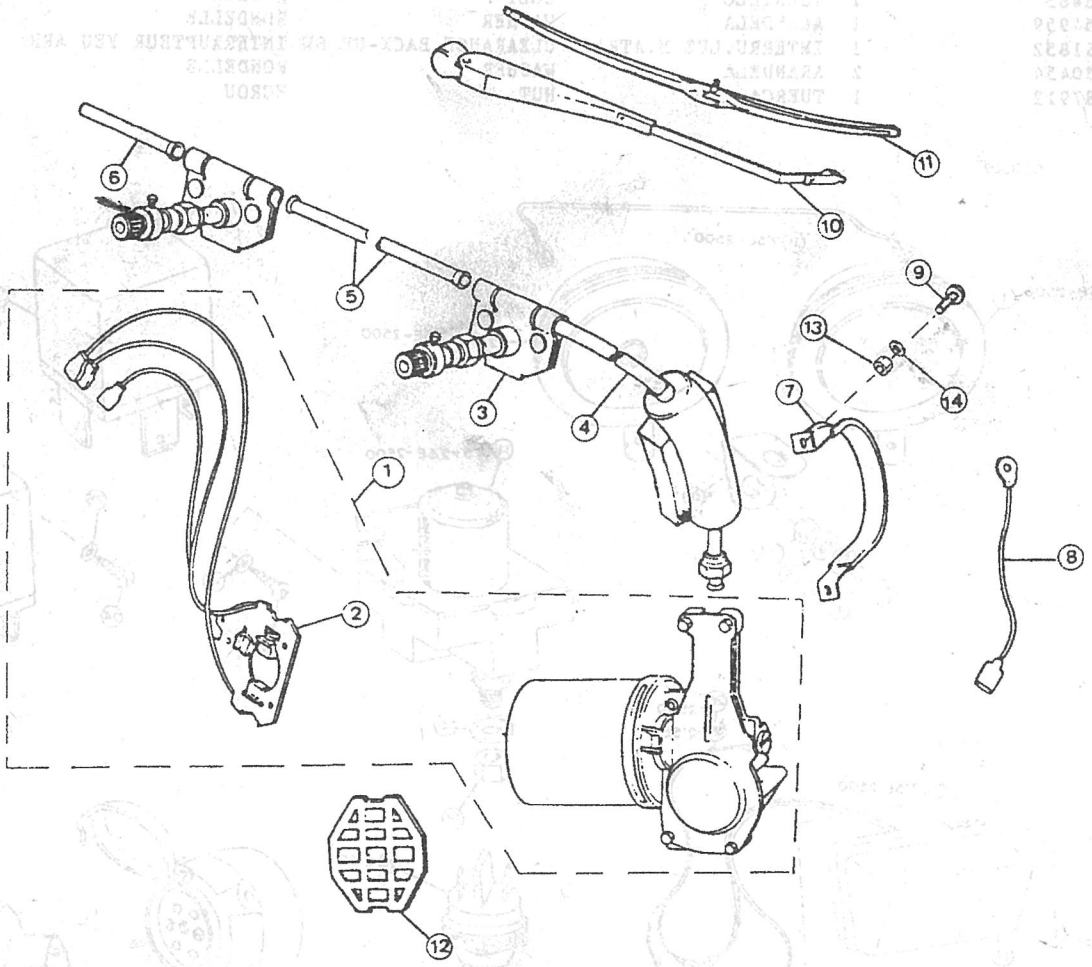

PUBLICACION N:790776 GRUPO-05 SISTEMA ELECTRICO SUBGRUPO-LIMPIAPARABRISAS
EDICION N: 1 GROUP-05 ELECTRICAL SYSTEM SUBGROUP-REAR WINDSCREEN
GROUPE-05 SYSTEME ELECTRIQU SUBGROUPE-ESSUIE GLACE ARRIERE

N.FIG PLATE N.FIG	N.PIEZA PARTNUMBER N.PIECE	CAN QTY OUT	DENOMINACION	DESCRIPTION	DENOMINATION	OBSERVACIONES
1	175724	1	MOTOR LIMPIA-CRISTAL	WIPER MOTOR ASSY	MOTEUR ESSVIE GLACE	
2	MUC1291	1	SEPARADOR	SPACER	ENTRETOISE	
3	PRC4613	1	TAPA	COVER	COUVERCLE	
4	166721	1	BRAZO DE ESCOBILLA	WIPER ARM	BRAS DE BALAI	
5	166720	1	ESCOBILLA	WIPER BLADE	BALAI D'ESSUIE-GLACE	
6	MTC9914	1	SOPORTE TUBO	PIPE SUPPORT	SUPPORT TUYAU	
7	PRC4471	1	TUBO PROTECTOR CABLE	PROTECTOR CABLE PIPE	TUYAU PROTECTOR	
8	03211-04125	4	TORNILLO	BOLT	BOULON	
9	AK606011K1	4	TUERCA MUELLE	SPRING NUT	ECROU RESSORT	
10	182113	1	TORNILLO	BOLT	BOULON	
11	3900	1	ARANDELA	WASHER	RONDELLE	
12	79240	1	TUERCA	NUT	ECROU	
13	176705	1	CABLE	CABLE	CABLE	
14	165824	1	REGLETA DE CONEXION	JOINING LEAD	REGLETTE D'CONNEXION	

050509

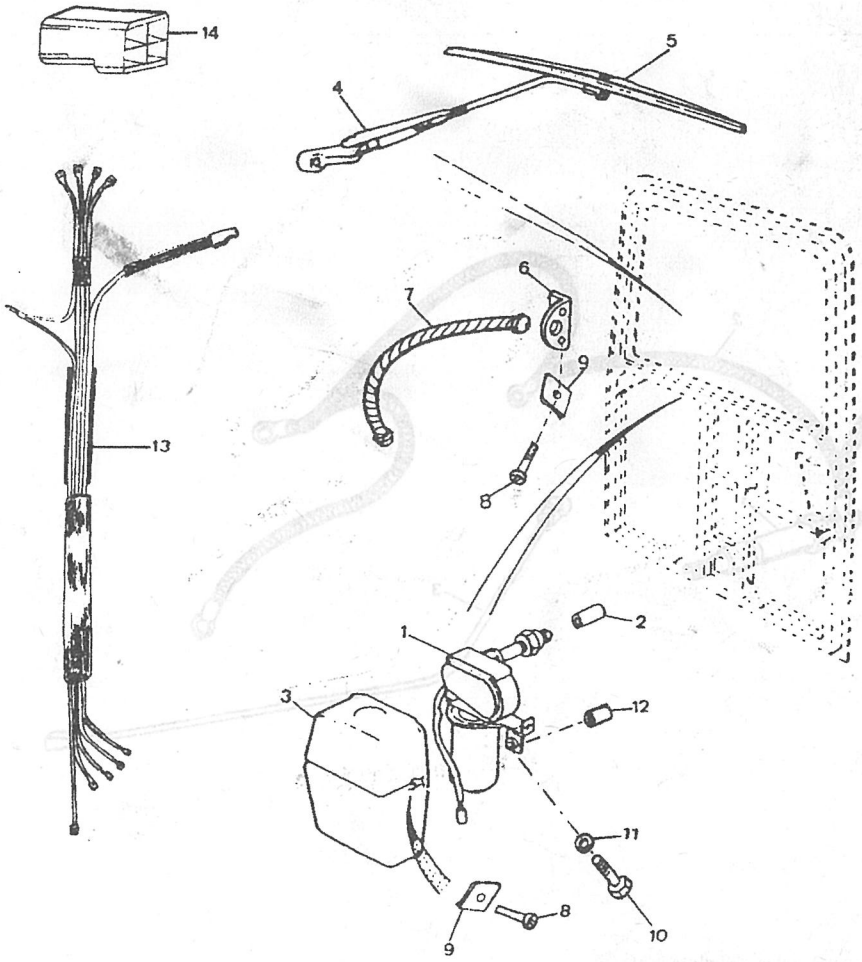

PUBLICACION N:790776 GRUPO=05 SISTEMA ELECTRICO SUBGRUPO=BUJIAS DE CALDEO
EDICION N: 1 GROUP=05 ELECTRICAL SYSTEM SUBGROUP=MEATING SPARK PLUGS
GROUPE=05 SYSTEME ELECTRIQU SUBGROUPE=BOUGIE D CHALDEEN

N.FIG PLATE N.FIG	N.PIEZA PARTNUMBER N.PIECE	CAN QTY OUT	DENOMINACION	DESCRIPTION	DENOMINATION	OBSERVACIONES
1	166603	4	BUJIA DE CALDEO	HEATER PLUG	BOUGIE DE CHAUFFER	
2	PRC6295	1	CABLE	LEAD	CABLE	
3	174715	1	CABLE	LEAD	CABLE	

050618

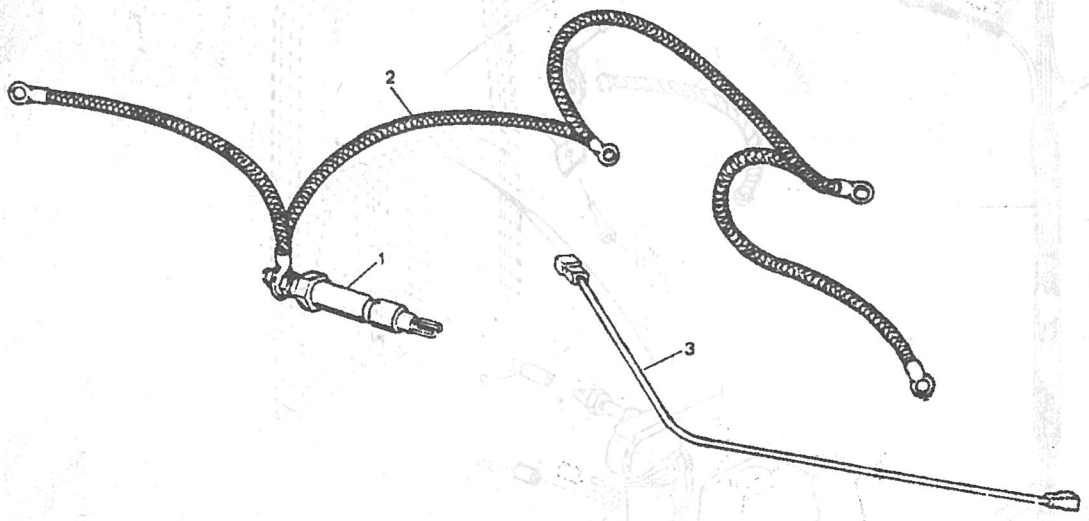

PUBLICACION N:790776 GRUPO=05 SISTEMA ELECTRICO SUBGRUPO=ALTERNADOR
EDICION N: 1 GROUP=05 ELECTRICAL SYSTEM SUBGROUP=ALTERNATOR
GROUPE=05 SYSTEME ELECTRIQU SUBGROUPE=ALTERNATEUR

N.FIG PLATE N.FIG	N.PIEZA PARTNUMBER N.PIECE	CAN QTY OUT	DENOMINACION	DESCRIPTION	DENOMINATION	OBSERVACIONES
1	173799	1	ALTERNADOR VALEO	VALEO ALTERNATOR	ALTERNATEUR VALEO	D 10-87 ALTV.174700
2	00000A00316	1	TAPA TRASERA	REDR COVER	COUVERCLE ARRIERE	
3	00000A00317	1	PLACA DE DIODOS	DIODE PLATE	PLAQUE DE DIODOS	
4	00000A00315	1	CAJA DE ESCOBILLAS	BUSH BOX	BOITE DE BALAIS	
5	00000A00314	1	REGULADOR	REGULATOR	REGULATEUR	
6	00000A00318	1	ARMADURA	FRAMEWORK	CARCASSE	
7	00000A00321	1	INDUCIDO	ARMATURE	INDUIT	
8	00000A00320	1	RODAMIENTO TRASERO	REAR BEARING	ROULEMENT ARRIERE	
9	00000A00319	1	ROTOR	ROTOR	ROTOR	
10	00000A00324	1	JUEGO FIJACIONES	ATTACHMENT SET	JEU DE FIXAGE	
11	790250	1	CONJ TAPA DELANTERA	FRONT COVER ASSY	ENS COUVERCLE AVANT	
12	790281	1	RODAMIENTO DELANTERO	FRONT BEARING	ROULEMENT AVANT	
13	00000A00323	1	JUEGO FIJACION	ATTACHMENT SET	JEU DE FIXAGE	
14	00000A00326	1	VENTILADOR	FAN	VENTILATEUR	
15	00000A00325	1	POLEA	PULLEY	POULIE	
16	00000A00327	1	JUEGO FIJACION POLEA	PULLEY FAN MOUNTING	FIXATION POULIE VENT	

050716

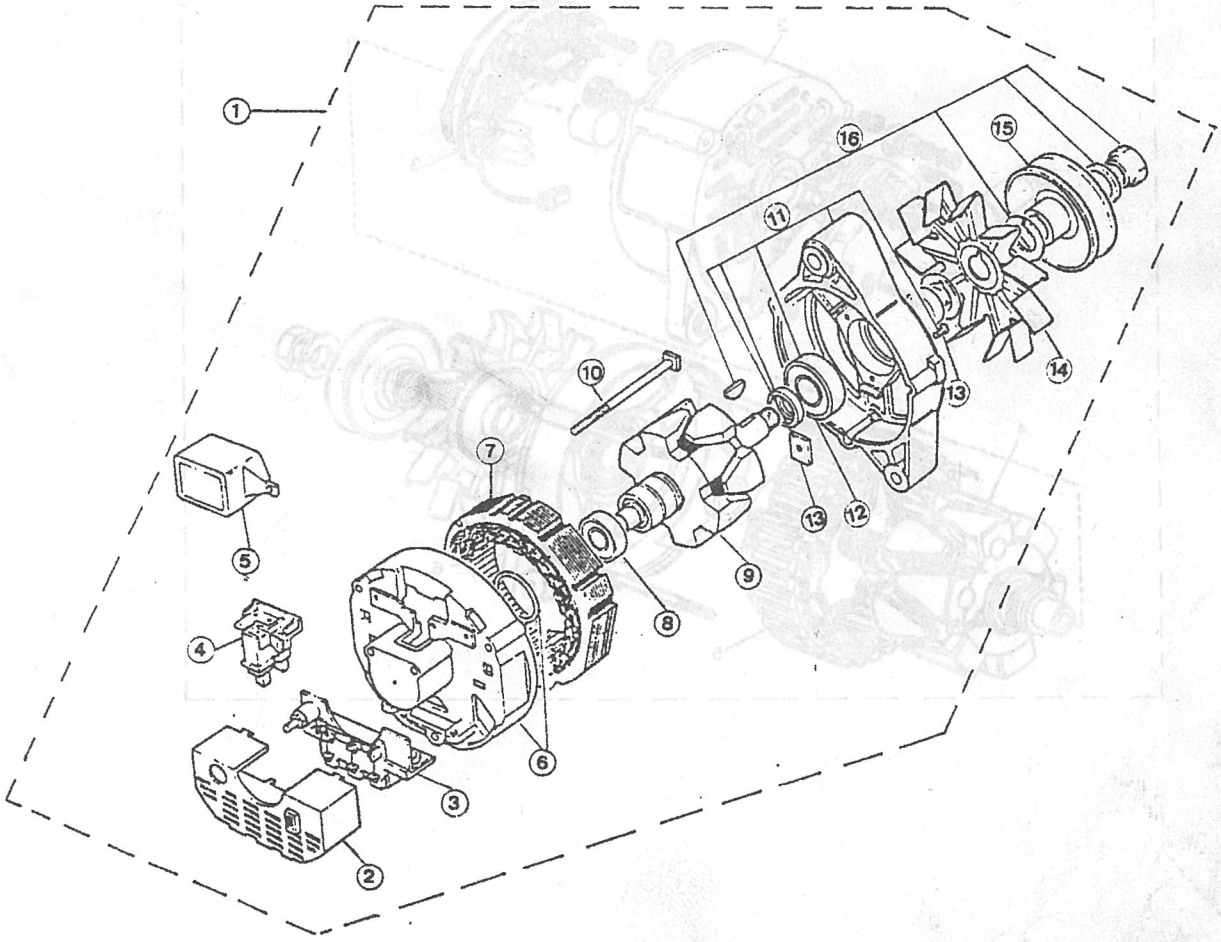

PUBLICACION N:790776 GRUPO=05 SISTEMA ELECTRICO SUBGRUPO=ALTERNADOR MAGN.MARE
EDICION N: 1 GROUP=05 ELECTRICAL SYSTEM SUBGROUP=ALTERNATOR MAGN.MARE
GROUPE=05 SYSTEME ELECTRIQU SUBGROUPE=ALTERNATEUR MAG.MARE

N.FIG PLATE N.FIG	N.PIEZA PARTNUMBER N.PIECE	CAN QTY OUT	DENOMINACION	DESCRIPTION	DENOMINATION	OBSERVACIONES
1	174700	1	ALTERNADOR MAGN.MARE	ALTERNATOR MAGN.MARE	ALTERNATEUR MAG.MARE	
2	790820	1	SOPORTE	SUPPORT	SUPPORT	
3	790821	1	RECTIFICADOR	RECTIFIER	RECTIFICATEUR	
4	790822	1	ROTOR	ROTOR	ROTOR	
5	790823	1	STATOR	STATOR	STATOR	
6	790824	1	SOPORTE	SUPPORT	SUPPORT	
7	790819	1	REGULADOR	REGULATOR	REGULATEUR	
8	790891	1	RODAMIENTO	BEARING	ROULEMENT	
9	790892	3	TORNILLO	BOLT	BOULON	
10	790893	1	TUERCAS Y ARANDELAS	WASHER AND NUT SET	JEU ECROU ET RONDELL	
11	790894	1	JUEGO DE TERMINALES	TERMINALS SET	JEU TERMINAUX	
12	790895	1	DIODO	DIODE	DIODE	

050717

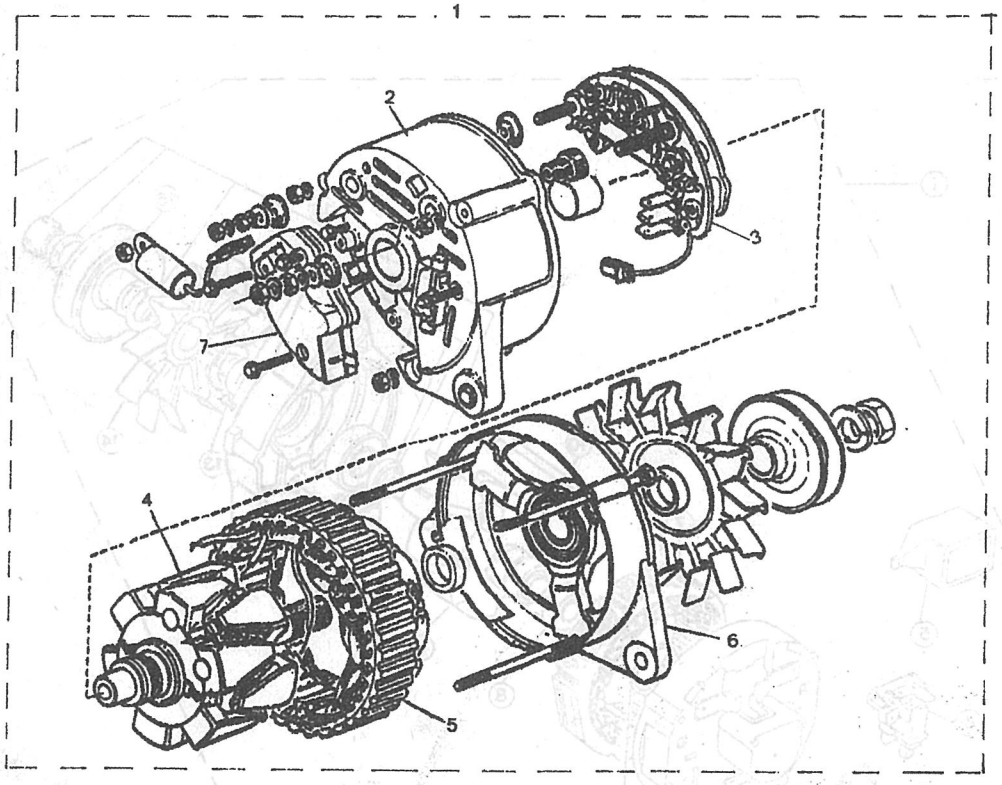

PUBLICACION N:790776 GRUPO-05 SISTEMA ELECTRICO SUBGRUPO-SOPORTE ALTERNADOR (DIRECCION MECANICA)
EDICION N: 1 GROUP-05 ELECTRICAL SYSTEM SUBGROUP-ALTERNATOR SUPPORT
GROUPE-05 SYSTEME ELECTRIQU SUBGROUPE-SUPPORT ALTERNATEUR

N.FIG PLATE N.FIG	N.PIEZA PARTNUMBER N.PIECE	CAN QTY OUT	DENOMINACION	DESCRIPTION	DENOMINATION	OBSERVACIONES
1	166779	1	SOPORTE ALTERNADOR	ALTERNATOR BRACKET	SUPPORT D'ALTERNATEU	2'5B DIRE.MECANIC
2	BH108171	1	TORNILLO	BOLT	BOULON	
3	WL108001	3	ARANDELA MUELLE	SPRING WASHER	RONDELLE RESSORT	
4	SH108301	2	TORNILLO	BOLT	BOULON	
5	182125	1	TORNILLO	BOLT	BOULON	
6	181173	2	TUERCA	NUT	ECROU	
7	182135	1	TORNILLO	BOLT	BOULON	
8	3841	1	ARANDELA	WASHER	RONDELLE	
9	568789	1	TENSOR	ADJUSTING LING	TENDEUR	
10	ERC8964	1	TORNILLO	BOLT	BOULON	
11	WM108001	1	ARANDELA	WASHER	RONDELLE	
12	ERC7974	1	SEPARADOR	SPACER	ENTRETOISE	
13	SX108201	1	TORNILLO	BOLT	BOULON	
14	WM108001	1	ARANDELA MUELLE	SPRING WASHER	RONDELLE RESSORT	
15	2266	1	ARANDELA PLANA	PLAIN WASHER	RONDELLE PLANE	

050806

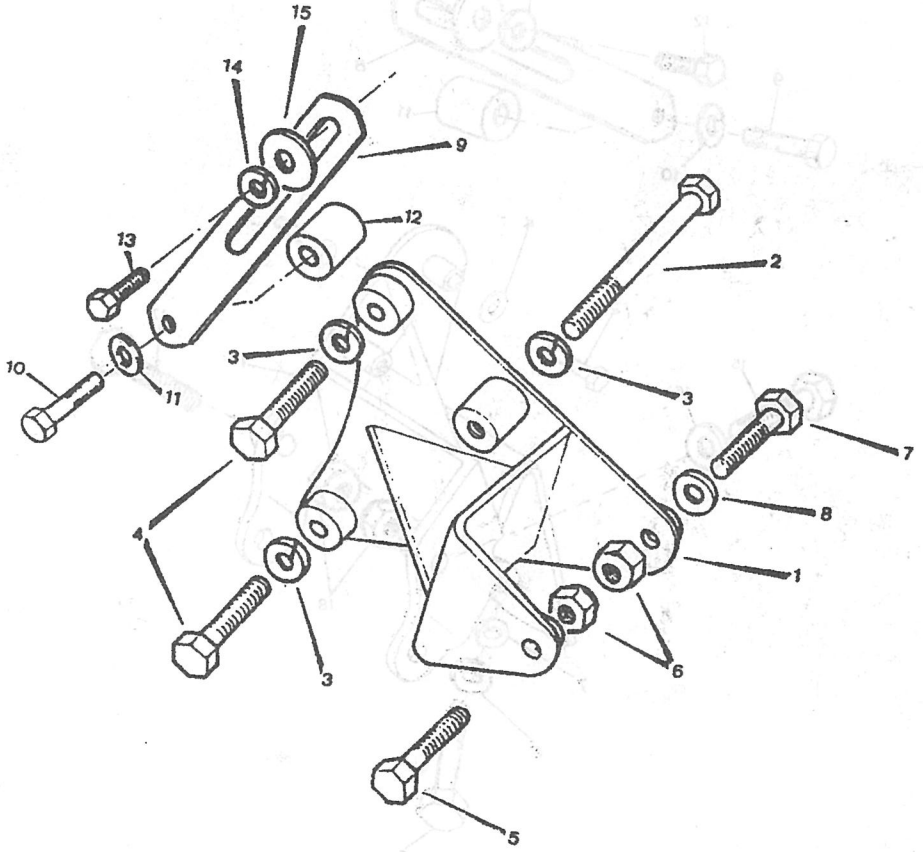

PUBLICACION N:790776 GRUPO=05 SISTEMA ELECTRICO SUBGRUPO=SOPORTE ALTERNADOR
EDICION N: 1 GROUP=05 ELECTRICAL SYSTEM SUBGROUP=ALTERNATOR SUPPORT
GROUPE=05 SYSTEME ELECTRIQU SUBGROUPE=SUPPORT D'ALTERNATEU

N.FIG PLATE N.FIG	N.PIEZA PARTNUMBER N.PIECE	CAN QTY OUT	DENOMINACION	DESCRIPTION	DENOMINATION	OBSERVACIONES
1	169189	1	SOPORTE ALTERNADOR	ALTERNATOR BRACKET	SUPPORT D'ALTERNATEU	2500 Y 2'5 DI.HID.
2	SH108301	2	TORNILLO	BOLT	BOULON	
3	BH108171	1	TORNILLO	BOLT	BOULON	
4	WL108001	3	ARANDELA MUELLE	SPRING WASHER	RONDELLE RESSORT	
5	SH108251	2	TORNILLO	BOLT	BOULON	
6	3899	2	ARANDELA PLANA	PLAIN WASHER	RONDELLE PLANE	
7	WM108001	2	ARANDELA MUELLE	SPRING WASHER	RONDELLE RESSORT	
8	568789	1	TENSOR	ADJUSTING LING	TENDEUR	
9	ERC8964	1	TORNILLO	BOLT	BOULON	
10	WM108001	1	ARANDELA MUELLE	SPRING WASHER	RONDELLE RESSORT	
11	ERC7974	1	SEPARADOR	SPACER	ENTRETOISE	
12	SX108201	1	TORNILLO	BOLT	BOULON	
13	WM108001	1	ARANDELA MUELLE	SPRING WASHER	RONDELLE RESSORT	
14	2266	1	ARANDELA PLANA	PLAIN WASHER	RONDELLE PLANE	
15	182125	1	TORNILLO	BOLT	BOULON	
16	3841	1	ARANDELA PLANA	PLAIN WASHER	RONDELLE PLANE	
17	182135	1	TORNILLO	BOLT	BOULON	
18	181173	2	TUERCA	NUT	ECROU	

050807

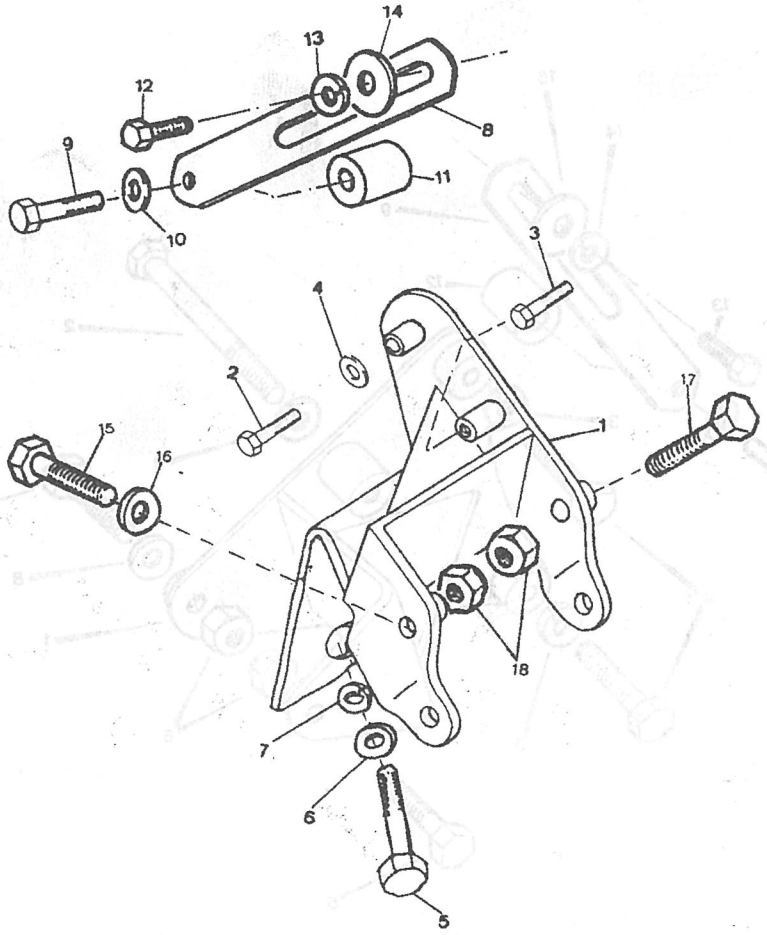

PUBLICACION N:790776 GRUPO=05 SISTEMA ELECTRICO SUBGRUPO=MOTOR DE ARRANQUE
EDICION N: 1 GROUP=05 ELECTRICAL SYSTEM SUBGROUP=STARTER MOTOR
GROUPE=05 SYSTEME ELECTRIQU SUBGROUPE=DEMARREUR

N.FIG PLATE N.FIG	N.PIEZA PARTNUMBER N.PIECE	CAN QTY OUT	DENOMINACION	DESCRIPTION	DENOMINATION	OBSERVACIONES
1	171764	1	MOTOR ARRANQUE VALEO	STARTER MOTOR VALEO	DEMARREUR VALEO	
2	790209	1	CONTACTOR	SOLENOID	SOLENOIDE	
3	790210	1	HORQUILLA	FORK	FOURCHETTE	
4	790211	1	JUEGO DE PIEZAS	PIECES KIT	JEU DE PIECES	
5	790213	1	PI/ON	DRIVE	PIGNON	
6	790214	1	INDUCIDO	ARMATURE	INDUIT	
7	790215	1	INDUCTOR	FIELD COIL	INDUIT	

050905

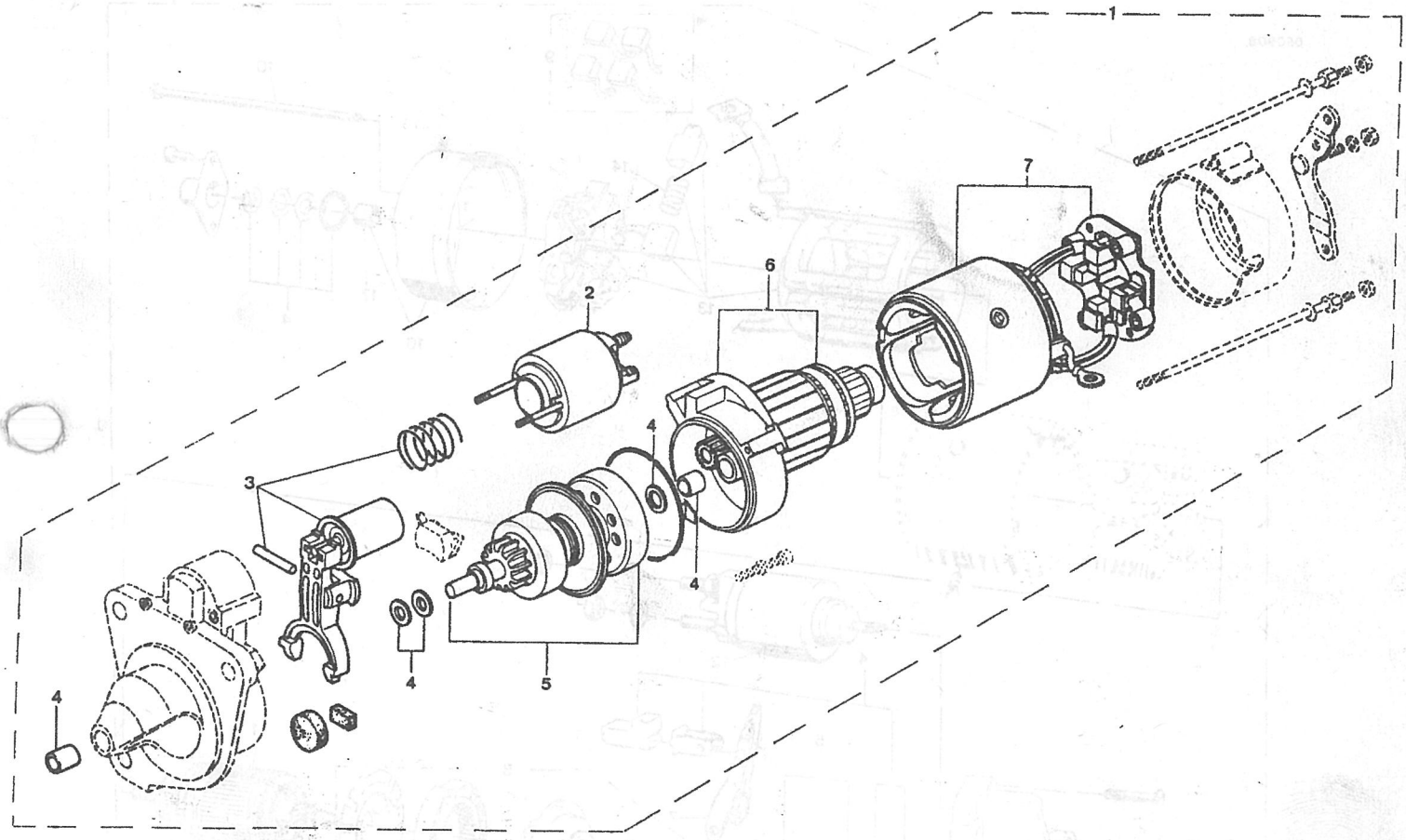

PUBLICACION N:790776 GRUPO=05 SISTEMA ELECTRICO SUBGRUPO=MOTOR ARRANQUE BOSCH
EDICION N: 1 GROUP=05 ELECTRICAL SYSTEM SUBGROUP=STARTER MOTOR BOSCH
GROUPE=05 SYSTEME ELECTRIQU SUBGROUPE=DEMARREUR BOSCH

N.FIG PLATE N.FIG	N.PIEZA PARTNUMBER N.PIECE	CAN QTY OUT	DENOMINACION	DESCRIPTION	DENOMINATION	OBSERVACIONES
1	171764	1	MOTOR ARRANQUE	STARTER MOTOR	DEMARREUR	D 10-84
2	194713	1	TAPA DELANTERA	FRONT COVER	COUVERCLE AVANT	
3	194714	1	CASQUILLO	BUSH	BAGUE	
4	194715	1	JUEGO DE PIEZAS	PARTS KIT	JEU DE PIECES	
5	194716	1	PI/ON	DRIVE	PIGNON	
6	194717	1	CASQUILLO	BUSH	BAGUE	
7	194718	1	HORQUILLA	FORK	FOURCHETE	
8	790812	1	CONJ.ENGRA.INVERSOR	INVERTER GEAR ASSY	ENS ENGRANAGE INVERS	
9	194726	1	JUEGO DE ESCOBILLAS	BRUSH KIT	JEU DE BALAIS	
10	194767	2	TORNILLO	BOLT	BOULON	
11	194722	1	INDUCIDO	ARMATURE	INDUIT	
12	194723	1	CONTACTOR	SOLENOID	SOLENOIDE	
13	194724	1	CONJ BOBINA INDUCTOR	DIEL COIL ASSY	ENS INDUIT	
14	194725	4	MUELLE	SPRING	RESSORT	
16	194727	1	TAPA	COVER	COUVERCLE	
17	194728	1	CASQUILLO	BUSH	BAGUE	

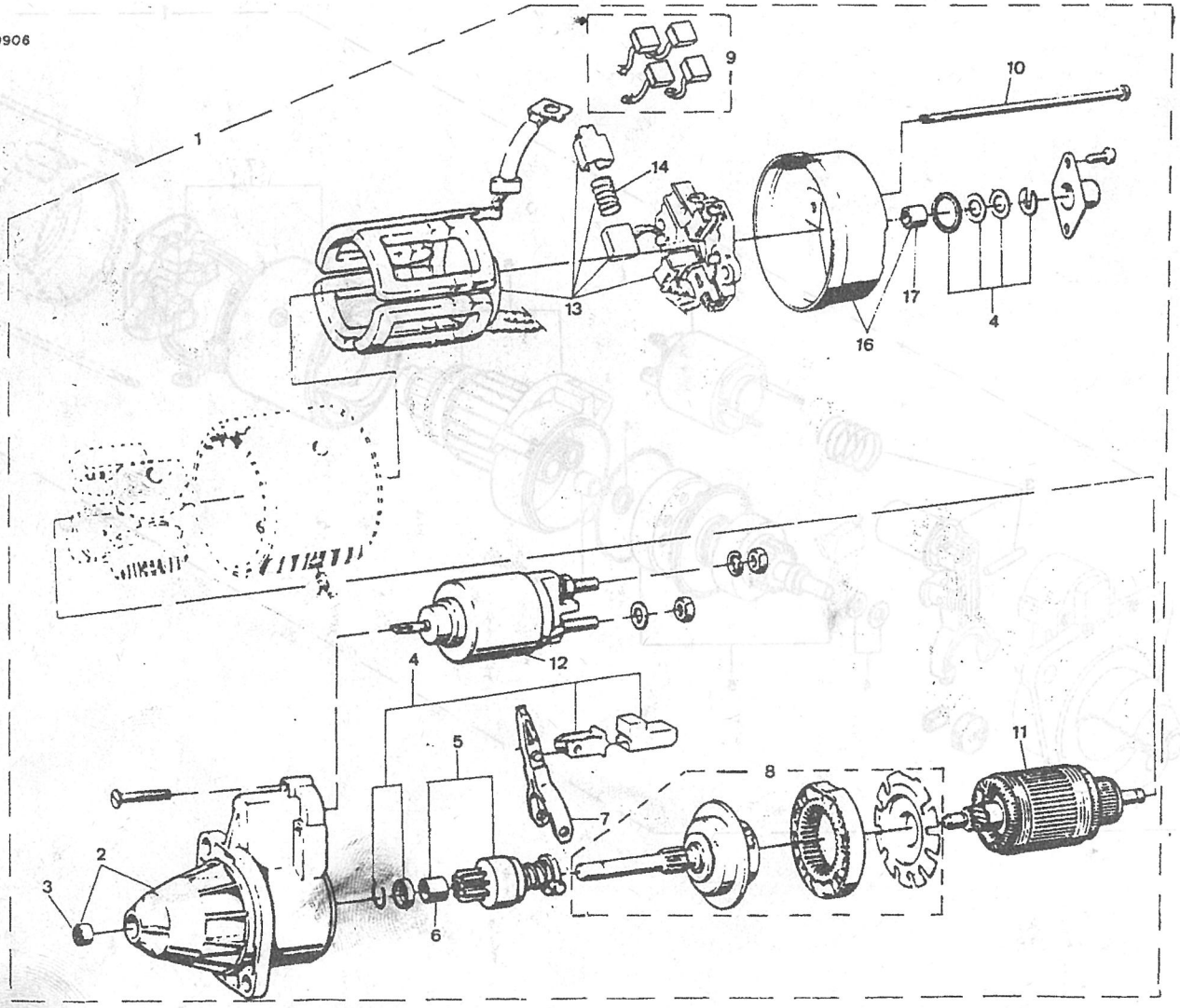

PUBLICACION N:790776 GRUPO=05 SISTEMA ELECTRICO SUBGRUPO=FAROS Y PILOTOS
EDICION N: 1 GROUP=05 ELECTRICAL SYSTEM SUBGROUP=MEAD LAMPS
GROUPE=05 SYSTEME ELECTRIQU SUBGROUPE=PHARES ET FEUS

N.FIG PLATE N.FIG	N.PIEZA PARTNUMBER N.PIECE	CAN QTY OUT	DENOMINACION	DESCRIPTION	DENOMINATION	OBSERVACIONES
1	36410A80011	1	PILOTO LATERAL L/D	SIDE LAMP RH	FEV LATERAL CD	
	36430A80011	1	PILOTO LATERAL L/I	SIDE LAMP LH	FEV LATERAL CG	
2	00000A00146	2	PLASTICO	LENS	VERRE	
3	00000A00147	4	TORNILLO	BOLT	BOULON	
4	00000A00148	2	BOMBILLA	BULB	LAMPE	
5	176706	1	FARO ANTINIEBLA	ANTI-FOG HEADLAMP	PHARE ANTIBROVILLARD	
6	790243	1	PLASTICO ROJO	RED LAMP	VERRE ROUGE	
7	264591E1	1	BOMBILLA 21W	BULB 21W	LAMPE 21W	
8	77861	8	TORNILLO	BOLT	BOULON	
9	088190	8	ARANDELA ESTRELLA	STAR WASHER	RONDELLE DE ETOILE	
10	180124	8	TUERCA	NUT	ECROU	
11	166796	1	PILOTO MARCHA ATRAS	REVERSE LAMP	FEU MARCHE ARRIERE	
12	194985	1	PLASTICO	LENS	VERRE	
13	264591E1	1	BOMBILLA 21W	BULB 21W	LAMPE 21W	
14	161587	2	PILOTO TRASERO	REAR LAMP	FEV ARRIERE	
15	193148	2	PLASTICO	LENS	VERRE	
16	10211E1	2	BOMBILLA SITUACION	DIDE BULB	LAMPE STATIONNEMMENT	
	264591E1	4	BOMBILLA 21W	BULB 21W	LAMPE 21W	
17	166797	1	PILOTO INTERMITEN LD	FLASHER LAMP RH	FEV CLIGNOTANT CD	
	166798	1	PILOTO INTERMITEN LI	FLASHER LAMP LH	FEV CLIGNOTANT CG	
18	193549	1	PLASTICO L/D	LENS RH	VERRE CD	
	193550	1	PLASTICO L/I	LENS LH	VERRE CG	
19	166844	2	BOMBILLA 10W	BULB 10W	LAMPE 10W	
	264591E1	2	BOMBILLA 21W	BULB 21W	LAMPE 21W	
20	180209	4	TORNILLO	BOLT	BOULON	
21	054959	4	ARANDELA PLANA	PLAIN WASHER	RONDELLE PLANE	
22	2247	4	TUERCA	NUT	ECROU	
23	166795	1	PILOTO MATRICULA	REGISTRATION LAMP	FEV PLAQUE POLICE	2500
24	176724	1	PILOTO MATRICULA	REGISTRATION LAMP	FEV PLAQUE POLICE	2'5B-2'5 ESPEC.
25	194986	1	PLASTICO	LENS	VERRE	
26	166844	1	BOMBILLA 10W	BULB 10W	LAMPE 10W	
27	712073	2	CAPTAFAROS ROJO	RED REFLECTOR	CATADIOPTRE ROUGE	
28	164528	1	PILOTO TRASERO LD	REAR LAMP RH	FEV ARRIERE CD	2'5 DOBLE PTA.TRA
	164529	1	PILOTO TRASERO LI	REAR LAMP LH	FEV ARRIERE CG	2'5B DOBLE PTA TR
29	193551	1	PLASTICO LD	LENS RH	VERRE CD	
	193552	1	PLASTICO LI	LENS LH	VERRE CG	
30	164534	2	PILOTO MATRICULA	REGISTRATION LAMP	FEV PLAQUE POLICE	2'5B DOBLE PTA TR
31	56667	1	CLIP	CLIP	CLIP	
32	219680	3	ARANDELA GOMA	RUBBER WASHER	RONDELLE DE CAOUTCHO	
33	175775	2	CONJ. FARO	HEADLAMP	ENS PHARE	
34	193213	2	OPTICA	LIGHT UNIT	BLOC OPTIQUE	
35	505197E1	2	BOMBILLA 45W	BULB 45W	LAMPE 45W	
36	185204	4	TORNILLO	BOLT	BOULON	
37	088190	4	ARANDELA	WASHER	RONDELLE	

051024

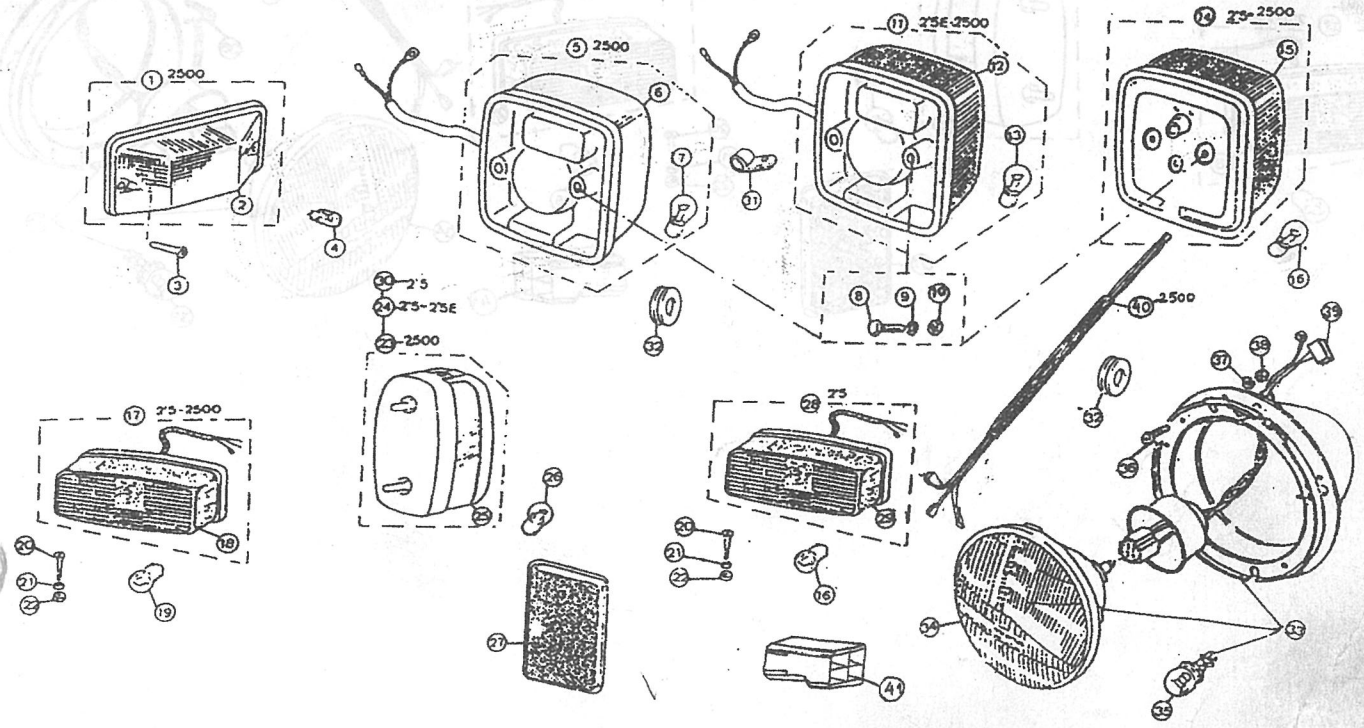

PUBLICACION N:790776 GRUPO=05 SISTEMA ELECTRICO SUBGRUPO=FAROS Y PILOTOS
EDICION N: 1 GROUP=05 ELECTRICAL SYSTEM SUBGROUP=MEAD LAMPS
GROUPE=05 SYSTEME ELECTRIQU SUBGROUPE=PHARES ET FEUS

N.FIG PLATE N.FIG	N.PIEZA PARTNUMBER N.PIECE	CAN QTY OUT	DENOMINACION	DESCRIPTION	DENOMINATION	OBSERVACIONES
38	184280	4	TUERCA	NUT	ECROU	
39	790791	2	CABLE VALEO	LEAD VALEO	CABLE VALEO	
40	166793	1	CABLE PILOTO TRA.L/D	CABLE REAR LAMP RH	CABLE FEV ARRIERE CD	
	166794	1	CABLE PILOTO TRA.L/I	CABLE REAR LAMP LH	CABLE FEV ARRIERE CG	
41	165824	2	REGLETA CONEXION	JOINING LEAD	REGLETTE D'CONNEXION	

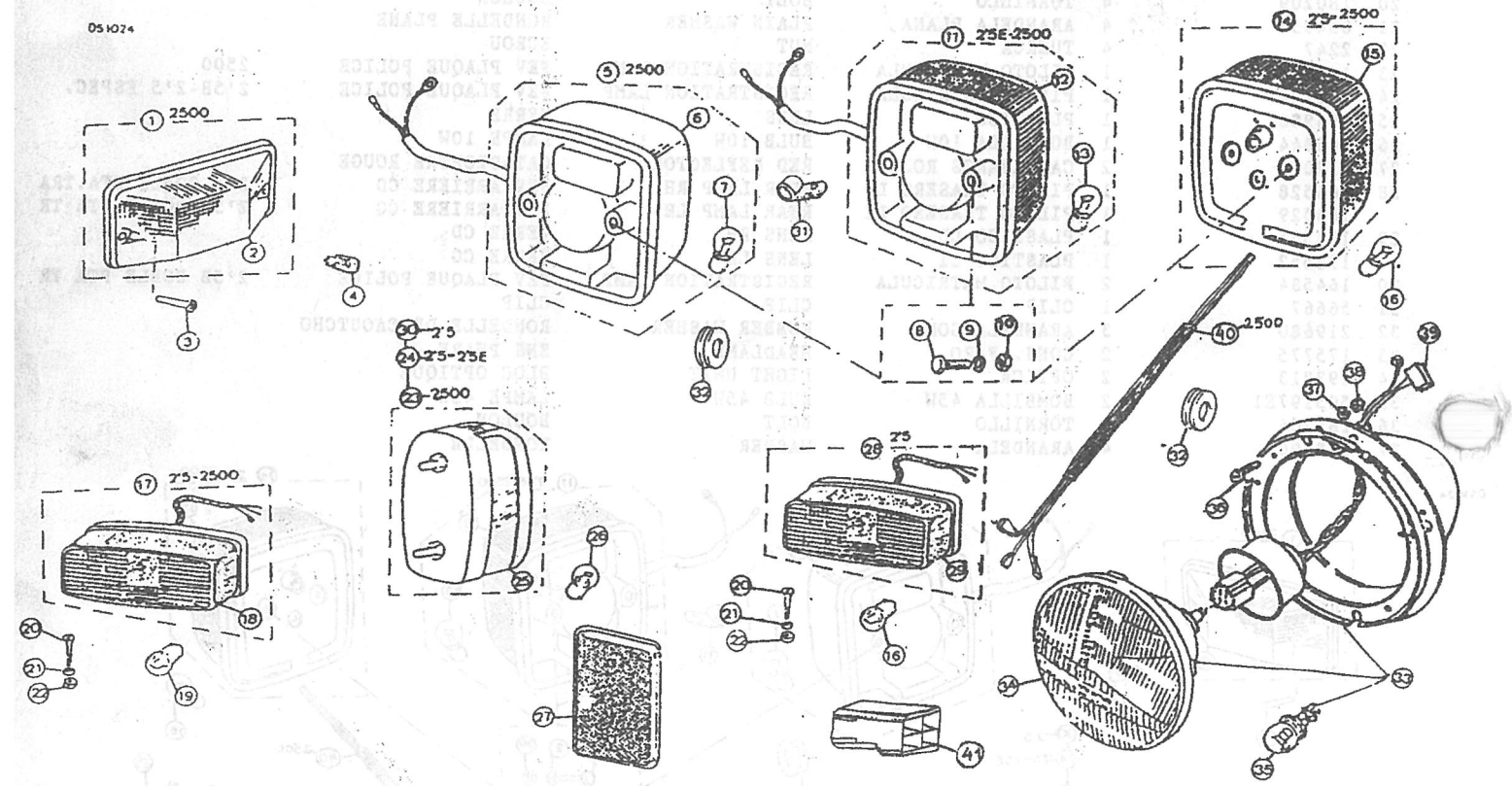

GRUPO 06 06 EMBRAGUE

GROUP 06 06 CLUTCH

GROUP 06 06 EMBRAYAGE

COMPOSICION.....COMPOSITION.....COMPOSICION

REFERENCIA PARTNUMBER NUM.PIECE	DENOMINACION	DESCRIPTION	DENOMINATION
060109	VOLANTE Y EMBRAGUE	FLYWHEEL AND CLUCHT	VOLANT MOTEUR ET EMB
060208	MECANISMO DE EMBRAGU	CLUCHT CONTROL MECHA	MECANISME DE COMANDO
060317	PEDAL Y CILINDRO	REDAL AND CYLINDER	CYLINDRE D'EMBRAYAGE

PUBLICACION N:790776 GRUPO=06 EMBRAGUE SUBGRUPO=VOLANTE Y EMBRAGUE
EDICION N: 1 GROUP=06 CLUTCH SUBGROUP=FLYWHEEL AND CLUCHT
GROUPE=06 EMBRAYAGE SUBGROUPE=VOLANT MOTEUR ET EMB

N.FIG PLATE N.FIG	N.PIEZA PARTNUMBER N.PIECE	CAN QTY OUT	DENOMINACION	DESCRIPTION	DENOMINATION	OBSERVACIONES
1	118729	1	CARTER VOLANTE	FLYWEEL HOUSING	CARTER DE VOLANT	
2	TE110061	11	ESPARRAGO	STUD	GOUJON	
3	ERC9240	1	ESPARRAGO	STUD	GOUJON	
4	ERR2532	1	RETEN	RETAINER	ARRETOIR	
5	164551	1	GOMA	RUBBER	CAOUTCHOUC	
6	113178	1	CLIP	CLIP	CLIP	
7	WL110001	2	ARANDELA	WASHER	RONDELLE	
8	BH110071	2	TORNILLO	BOLT	BOULON	
9	118731	1	VOLANTE MOTOR	FLYWHEEL	VOLANT MOTEUR	
10	113307	1	CORONA	CROWN	COURONNE	
11	231759	3	FIJA	DOWEL	TIGE	
12	ERC4658	1	PLACA	PLATE	PLAQUE	
13	113224	1	DISCO EMBRAGUE	CLUTCH PLATE	DISQUE D'EMBRAYAGE	
14	576557	1	CONJ.EMBRAGUE	CLUTCH ASSY	ENS D'EMBRAYAGE	
15	WM108001	6	ARANDELA MUELLE	SPRING WASHER	RONDELLE RESSORT	
16	SX108201	6	TORNILLO	BOLT	BOULON	
17	ERC6551	8	TORNILLO	BOLT	BOULON	
18	SH110301	6	TORNILLO	BOLT	BOULON	
19	850621	6	ARANDELA PLANA	PLAIN WASHER	RONDELLE PLANE	
20	113272	1	TAPON	PLUG	BOUCHON	
21	BH110091	1	TORNILLO	BOLT	BOULON	
22	WL110001	3	ARANDELA MUELLE	SPRING WASHER	RONDELLE RESSORT	
23	NH110041	2	TUERCA	NUT	ECROU	
24	SH110301	1	TORNILLO	BOLT	BOULON	
25	3290	1	TAPON	PLUG	BOUCHON	

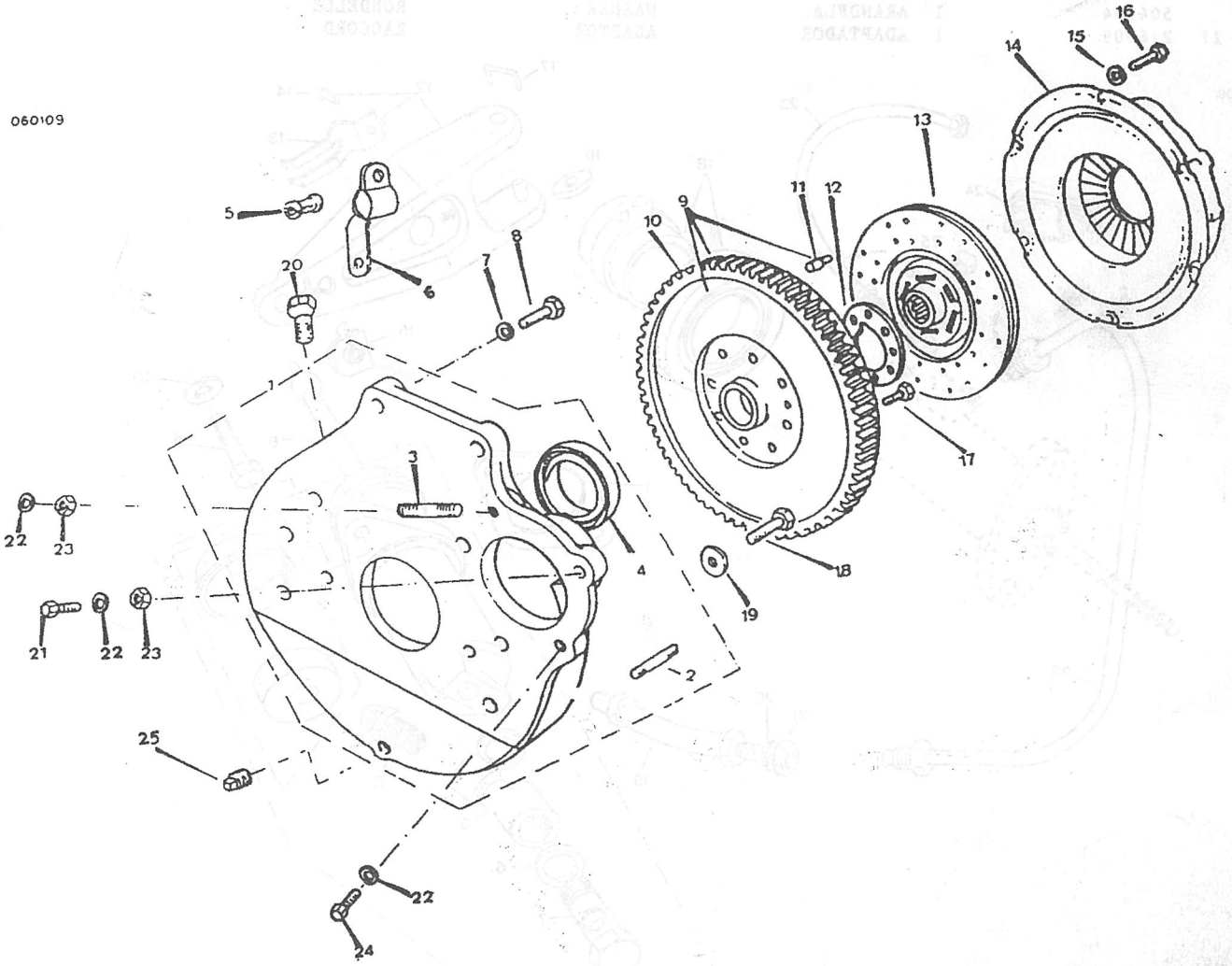

PUBLICACION N:790776 GRUPO=06 EMBRAGUE SUBGRUPO=MECANISMO DE EMBRAGU
EDICION N: 1 GROUP=06 CLUTCH SUBGROUP=CLUCHT CONTROL MECHA
GROUPE=06 EMBRAYAGE SUBGROUPE=MECANISME DE COMANDO

N.FIG PLATE N.FIG	N.PIEZA PARTNUMBER N.PIECE	CAN QTY OUT	DENOMINACION	DESCRIPTION	DENOMINATION	OBSERVACIONES
1	622180	1	CILINDRO AUXILIAR	AUXILIARY CYLINDER	CYLINDRE AUXILIARE	
2	193533	1	JUEGO DE REPARACION	REPAIR KIT	JEU DE REPARATION	
3	556508	1	RACORD	UNION	RACCORD	
4	233220	1	ARANDELA	WASHER	RONDELLE	
5	90622182	1	RACORD	UNION	RACCORD	
6	216914	1	ARANDELA	WASHER	RONDELLE	
7	512235	1	TORNILLO	BOLT	BOULON	
8	576751	1	VARILLA	ROD	TRINGLE	2'5 NORMAL-ESPECI
	FRC3417	1	VARILLA	ROD	TRINGLE	2500 CON LT85
9	187172	2	TORNILLO	BOLT	BOULON	2'5 B-2'5 ESPECIA
	SH108251	2	TORNILLO	BOLT	BOULON	2500 CON LT85
10	WL108001	2	ARANDELA	WASHER	RONDELLE	
11	591988	1	PLACA	PLATE	PLAQUE	
12	127607	1	PALANCA	LEVER	LEVIER	
13	FRC3325	1	MUELLE	SPRING	RESSORT	
14	RR0604	1	REMACHE	RIVET	RIVET	
15	FRC3327	1	CLIP DE PALANCA DESE	CLIP-PUSH ROD TO REL	ATTACHE	
16	FRC5255	2	DESLIZADOR	SLIPPER PAD-CLUTCH L	GLISSEUR	
17	FRC3416	1	HORQUILLA DE MANGUIT	STAPLE-RELEASE LEVER	FOURCHETTE	
18	FRC9568	1	MANGUITO DESEMBRAGUE	CLUTCH WITHDRAWL	MANCHON DE DEBRAY	
19	592510	1	LATIGUILLO	HOSE	TUBE FLEXIBLE	
20	021440	1	ARANDELA	WASHER	RONDELLE	
21	188183	1	TUERCA	NUT	ECROU	
22	176216	1	TUBO	PIPE	TUYAU	
23	176215	1	TUBO	PIPE	TUYAU	
24	176214	1	CLIP	CLIP	CLIP	
25	267601	1	TORNILLO	BOLT	BOULON	
26	216914	1	ARANDELA	WASHER	RONDELLE	
	504104	1	ARANDELA	WASHER	RONDELLE	
27	216909	1	ADAPTADOR	ADAPTOR	RACCORD	

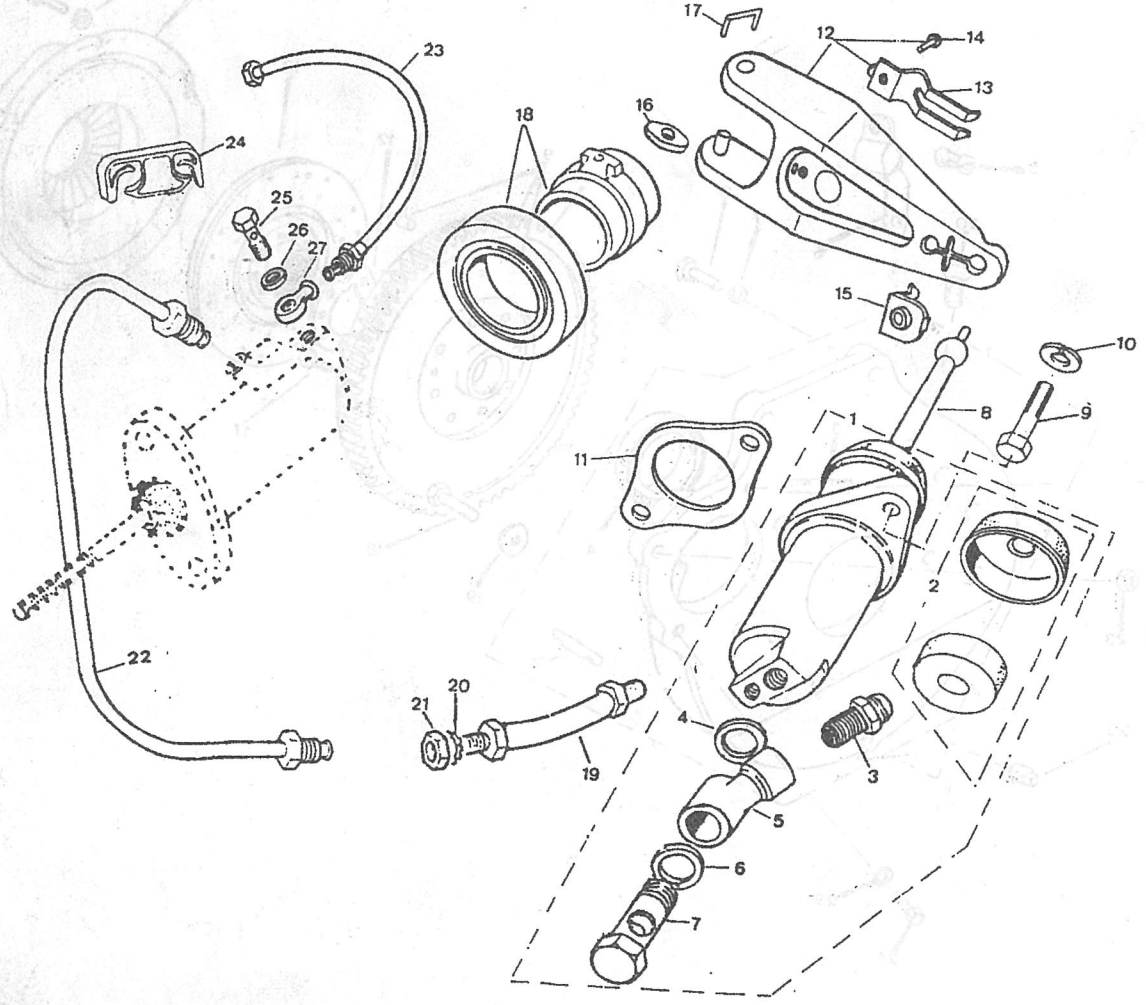

PUBLICACION N:790776 GRUPO=06 EMBRAGUE SUBGRUPO=PEDAL Y CILINDRO
EDICION N: 1 GROUP=06 CLUTCH SUBGROUP=REDAL AND CYLINDER
GROUPE=06 EMBRAYAGE SUBGROUPE=CYLINDRE D'EMBRAYAGE

N.FIG PLATE N.FIG	N.PIEZA PARTNUMBER N.PIECE	CAN-QTY OUT	DENOMINACION	DESCRIPTION	DENOMINATION	OBSERVACIONES
1	174218	1	SOPORTE	SUPPORT	SUPPORT	
2	272713	1	TAPA	COVER	COUVERCLE	
3	174206	1	JUNTA	JOINT	JOINT	
4	78227	6	TORNILLO	SCREW	VIS	
5	255209	1	TORNILLO	SCREW	VIS	
6	181184	1	TUERCA	NUT	ECROU	
7	790755	S-N	BOSTIK AE 13X4	BOSTIK AE 13X4	BOSTIK AE 13X4	
8	182118	6	TORNILLO	BOLT	BOULON	
9	2223	6	ARANDELA	WASHER	RONDELLE	
10	181169	6	TUERCA	NUT	ECROU	
11	171251	1	PEDAL	PEDAL	PEDALE	
12	174215	1	EJE 1 ANILLO	SHAFT FOR ONE RING	AXE POUR UNE ANNEAU	
13	171282	1	ANILLO ELACTICO	CIRCLIP	CIRCLIP	
14	171264	1	RESORTE L D	SPRING R H	RESSORT C D	
	171265	1	RESORTE L I	SPRING L H	RESSORT C G	
15	171279	2	CASQUILLO	BUSH	BAGUE	
16	174243	1	EJE	SHAFT	AXE	
17	269783	1	DISTANCIADOR	SPACER	ENTRETOISE	
18	171288	1	GOMA	RUBBER	CAOUTCHOUC	
19	164323	1	DEPOSITO TO EMBRAGUE	CLUTCH FLUID CONTAIN	RESERVOIR EMBRAYAGE	
20	191941	1	TAPON	PLUG	BOUCHON	
21	191942	1	JUNTA	JOINT	JOINT	
22	174282	1	SOPORTE	SUPPORT	SUPPORT	
23	569126	1	CILINDRO DE EMBRAGUE	CLUTCH CYLINDER	CYLINDRE D EMBRAYAGE	
24	8G8837	1	JUEGO DE REPARACION	REPAIR KIT	JEU DE REPARATION	
25	182120	2	TORNILLO	BOLT	BOULON	
26	3830	2	ARANDELA	WASHER	RONDELLE	
27	302373	2	ANILLO	RING	ANNEAU	
28	181173	2	TUERCA	NUT	ECROU	
29	181185	2	TUERCA	NUT	ECROU	
30	4148	2	ARANDELA	WASHER	RONDELLE	
31	201799	1	JUNTA	JOINT	JOINT	
	201800	1	JUNTA	JOINT	JOINT	

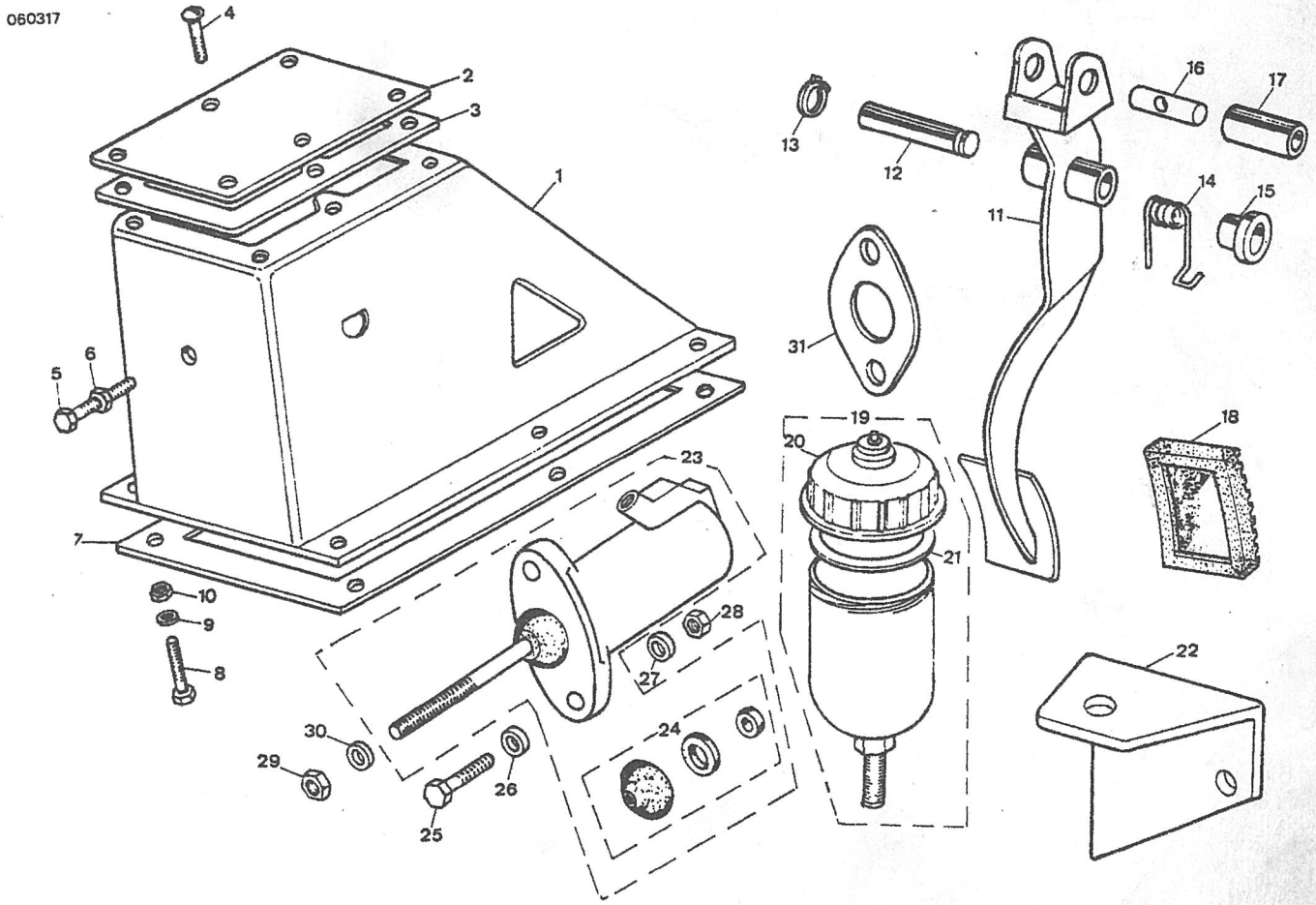

TRANSMISION M.FERRARI GRUPO-02 EMBRAGUE EMBRAGUE Y CILINDRO
SECCION M.C. GRUPO-04 CLUTCH EMBRAGUE-TRACT. AMC CL.-PEDAL
GRUPO-04 EMBRAGUE EMBRAGUE-CILINDRO - MECANICA

PIEZA PART.	NUMERO PARTE NUMBER	CANT. QTY	DESCRIPCION	DESCRIPTION	LEYENDA	ABREVIATURAS
1	174218	1	SOPORTE	SUPPORT	SOPORTE	
2	172173	1	TAPA	COVER	COUVERCLE	
3	172720	1	JUNTA	JOINT	JOINT	
4	72727	5	TORNILLO	SCREW	VIS	
5	285209	1	TORNILLO	SCREW	VIS	
6	181184	1	TUERCA	NUT	ECROU	
7	280285	8-N	ESPARRAGO	STUD	GOUJON AZ 12-N	
8	182115	6	TORNILLO	BOLT	BOULON	
9	8223	6	ARANDELA	WASHER	RONDELLE	
10	181189	6	TUERCA	NUT	ECROU	
11	171251	1	PEDAL	PEDAL	PEDALE	
12	174115	1	EJE I ANILLO	SHAFT FOR ONE RING	AXE POUR UNE ANNEAU	
13	171202	1	ANILLO ELASTICO	CIRCLIP	CIRCLIP	
14	171204	1	RESORTE L.D	SPRING R.H	RESSORT D.D	
	171205	1	RESORTE L.I	SPRING L.H	RESSORT G.G	
15	171275	2	CASQUILLO	BUSH	RADUT	
16	174245	1	EJE	SHAFT	AXE	
17	289285	1	DISTANCIADOR	SPACER	ENTRETOISE	
18	171288	1	CONA	BUSHER	CAOUTCHOUC	
19	186232	1	DEPOSITO TO EMBRAGUE	CLUTCH FLUID CONTAIN	RESERVOIR EMBRAYAGE	
20	191941	1	TAPON	PLUG	BOUCHON	
21	191942	1	JUNTA	JOINT	JOINT	
22	174282	1	SOPORTE	SUPPORT	SUPPORT	
23	289124	1	CILINDRO DE EMBRAGUE	CLUTCH CYLINDER	CYLINDRE D-EMBRAYAGE	
24	480827	1	JUEGO DE REPARACION	REPAIR KIT	JEU DE REPARATION	
25	182120	1	TORNILLO	BOLT	BOULON	
26	1830	2	ARANDELA	WASHER	RONDELLE	
27	202275	2	ANILLO	RING	ANNEAU	
28	181173	2	TUERCA	NUT	ECROU	
29	181185	2	TUERCA	NUT	ECROU	
30	4196	2	ARANDELA	WASHER	RONDELLE	
31	201799	1	JUNTA	JOINT	JOINT	
	201800	1	JUNTA	JOINT	JOINT	

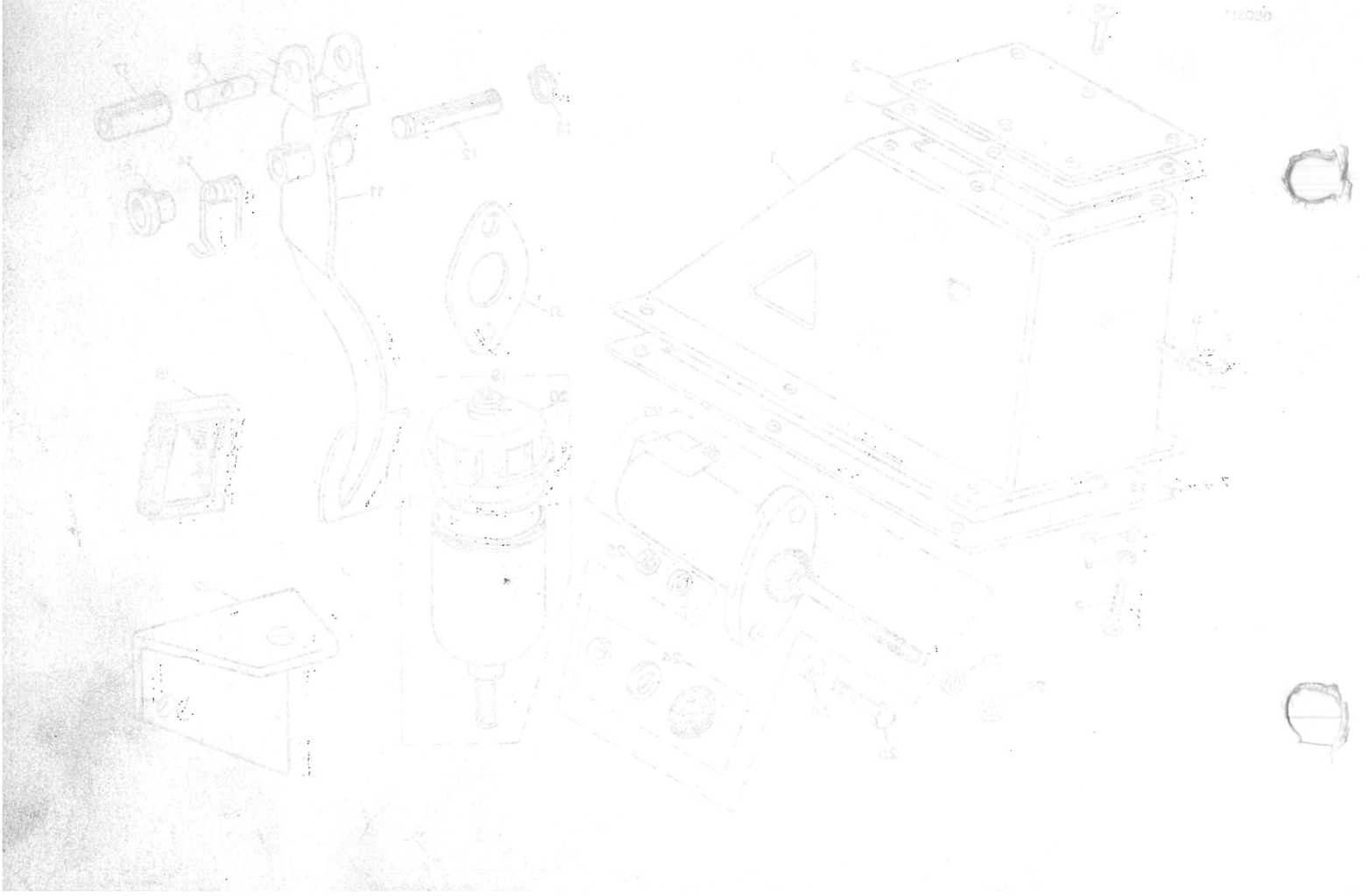

GRUPO 07 07 CAJA DE VELOCIDAD

GROUP 07 07 GEAR BOX

GROUP 07 07 BOITE DE VITESSE

COMPOSICION.....COMPOSITION.....COMPOSICION

REFERENCIA PARTNUMBER NUM.PIECE	DENOMINACION	DESCRIPTION	DENOMINATION
0700011	CAJA DE VELOCIDAD	GEAR BOX	BOITE DE VITESSE
0702013	CARTER CAJA VELOCIDA	GEAR BOX CARTER	CARTER BOITE DE VITE
0702014	CARTER DE EMBRAGUE	CLUCHT CARTER	CARTER DE EMBRAYAGE
0702017	ENGRANAJES	GEARS	ENGRANAGES
0702018	EJES Y HORQUILLAS	SELECTORS LEVERS	AXES ET FOURCHETTES
07020192	PALANCA DE VELOCIDAD	SPEED LEVER	LEVIER DE VITESSES
0704011	CAJA DE VELOCID.LT85	GEAR BOX LT85	BOITE DE VITESE LT85
0704015	CARTER CAJA VELOCIDA	GEAR BOX CARTER	CARTER BOITE DE VITE
0704016	CARTER DE PROLONGACI	EXTENSION CARTER	CARTER PROLONGATION
0704018	CARTER DE EMBRAGUE	CLUCHT CARTER	CARTER DE EMBRAYAGE
07040190	TAPA DELANTERA	FRONT COVER	COUVERCLE AVANT
07040192	ENGRANAJES	GEARS	ENGRANAGES
070618	PALANCA DE VELOCIDAD	SPEED LEVER	LEVIER DE VITESSES
070620	EJES Y HORQUILLAS	SELECTORS LEVERS	AXES ET FOURCHETTES

GRUPO 07 07 CAJA DE VELOCIDAD

GROUP 07 07 GEAR BOX

GROUP 07 07 BOITE DE VITESSE

COMPOSICION.....COMPOSITION.....CONFIGURATION

REFERENCIA PARTNUMBER NUM.PIECE	DENOMINACION	DESCRIPTION	DENOMINATION
0700011	CAJA DE VELOCIDAD	GEAR BOX	BOITE DE VITESSE
0700013	CARTER CAJA VELOCIDAD	GEAR BOX CARTER	CARTER BOITE DE VITE
0700014	CARTER DE EMBRAGUE	CLUTCH CARTER	CARTER DE EMBRAYAGE
0700017	ENGRANAJES	GEARS	ENGRANAGES
0700019	EJES Y HORQUILLAS	SELECTORS LEVERS	AXES ET FOURCHETTES
0700192	PALANCA DE VELOCIDAD	SPEED LEVER	LEVIER DE VITESSES
0704011	CAJA DE VELOCID.LTS	GEAR BOX LTS	BOITE DE VITESE LTS
0704013	CARTER CAJA VELOCIDAD	GEAR BOX CARTER	CARTER BOITE DE VITE
0704016	CARTER DE PROLONGACION	EXTENSION CARTER	CARTER PROLONGATION
0704018	CARTER DE EMBRAGUE	CLUTCH CARTER	CARTER DE EMBRAYAGE
0704190	TAPA DELANTERA	FRONT COVER	COUVERCLE AVANT
0704192	ENGRANAJES	GEARS	ENGRANAGES
0704193	PALANCA DE VELOCIDAD	SPEED LEVER	LEVIER DE VITESSES
0706420	EJES Y HORQUILLAS	SELECTORS LEVERS	AXES ET FOURCHETTES

PUBLICACION N:790776 GRUPO=07 CAJA DE VELOCIDAD SUBGRUPO=CAJA DE VELOCIDAD
EDICION N: 1 GROUP=07 GEAR BOX SUBGROUP=GEAR BOX
GROUPE=07 BOITE DE VITESSE SUBGROUPE=BOITE DE VITESSE

N.FIG PLATE N.FIG	N.PIEZA PARTNUMBER N.PIECE	CAN QTY OUT	DENOMINACION	DESCRIPTION	DENOMINATION	OBSERVACIONES
1	127667	1	CAJA DE VELOCIDAD	GEAR BOX	BOITE DE VITESSE	2'5B DL-2'5B DC
	127668	1	CAJA DE VELOCIDAD	GEAR BOX	BOITE DE VITESSE	2'5 ESPECIAL

0700011

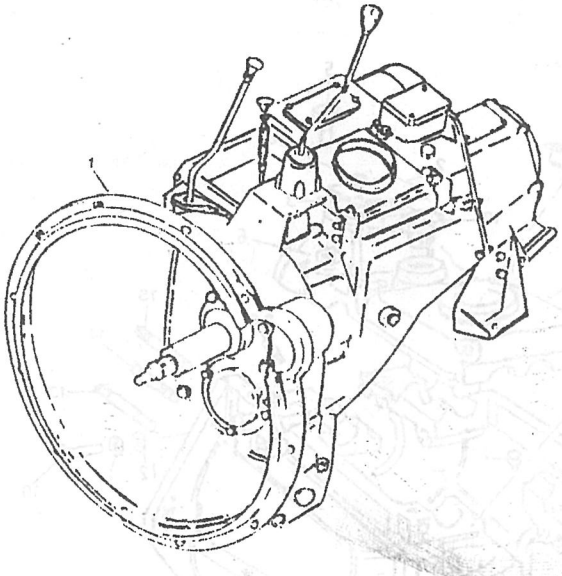

PUBLICACION N:790776 GRUPO=07 CAJA DE VELOCIDAD SUBGRUPO=CARTER CAJA VELOCIDA
EDICION N: 1 GROUP=07 GEAR BOX SUBGROUP=GEAR BOX CARTER
GROUPE=07 BOITE DE VITESSE SUBGROUPE=CARTER BOITE DE VITE

N.FIG PLATE N.FIG	N.PIEZA PARTNUMBER N.PIECE	CAN QTY OUT	DENOMINACION	DESCRIPTION	DENOMINATION	OBSERVACIONES
1	~~[illegible]~~ = 127588	1	CARTER CAJA VELOCI.	GEAR BOX HOUSING	CARTER DE BOITE D'V.	
2	05843	1	TAPA	COVER	COUVERCLE	
3	FRC3776	1	JUNTA	JOINT	JOINT	
4	52246	2	TORNILLO	BOLT	BOULON	
5	180208	4	TORNILLO	BOLT	BOULON	
6	180426	4	ARANDELA MUELLE	SPRING WASHER	RONDELLE RESSORT	
7	07289	4	FIJA	DOWEL	TIGE	
8	SH108405	5	TORNILLO	BOLT	BOULON	
9	BH108141	1	TORNILLO	BOLT	BOULON	
10	BH108181	2	TORNILLO	BOLT	BOULON	
11	WA108051	8	ARANDELA PLANA	PLAIN WASHER	RONDELLE PLANE	
12	WM108001	8	ARANDELA MUELLE	SPRING WASHER	RONDELLE RESSORT	
13	3238	2	ESPARRAGO	STUD	GOUJON	
14	528865	1	ESPARRAGO	STUD	GOUJON	
15	55778	2	ESPARRAGO	STUD	GOUJON	
16	3292	1	TAPON	PLUG	BOUCHON	
17	FRC3412	1	TAPON	PLUG	BOUCHON	
18	231341	1	ESPARRAGO	STUD	GOUJON	
19	556570	1	TAPON	PLUG	BOUCHON	
20	55636	1	FIJA	DOWEL	TIGE	
21	121317	1	TAPA SUPERIOR CARTER	COVER	CUVERCLE	
22	576713	1	TAPA RESPIRADERO	COVER	COUVERCLE	

0702013

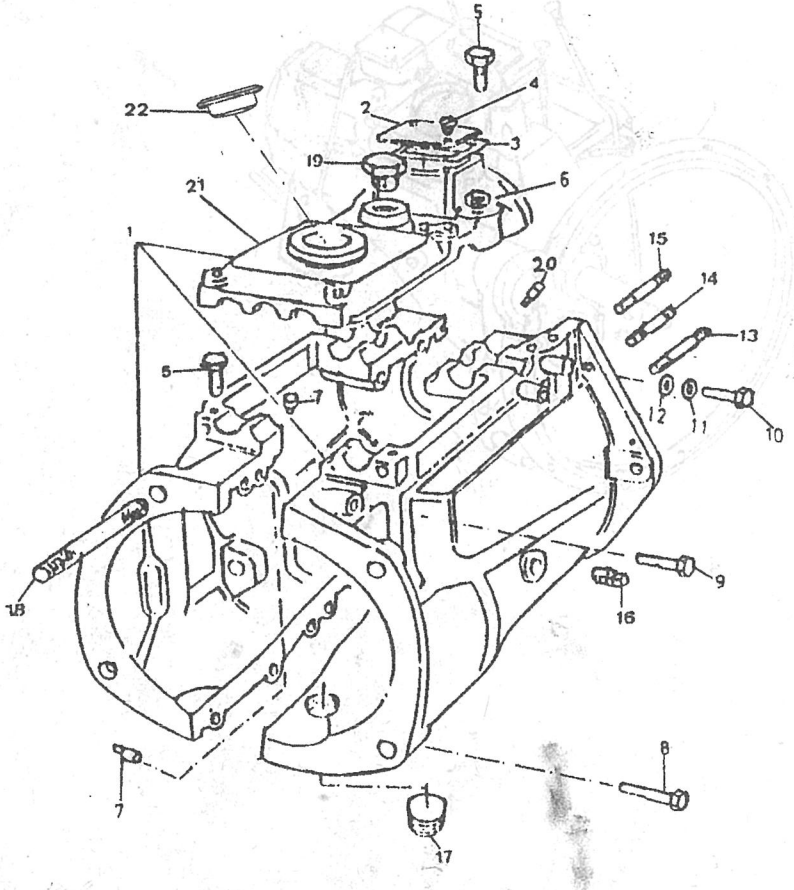

PUBLICACION N:790776 GRUPO=07 CAJA DE VELOCIDAD SUBGRUPO=CARTER DE EMBRAGUE
EDICION N: 1 GROUP=07 GEAR BOX SUBGROUP=CLUCHT CARTER
GROUPE=07 BOITE DE VITESSE SUBGROUPE=CARTER DE EMBRAYAGE

N.FIG PLATE N.FIG	N.PIEZA PARTNUMBER N.PIECE	CAN QTY OUT	DENOMINACION	DESCRIPTION	DENOMINATION	OBSERVACIONES
1	576714	1	CARTER DE EMBRAGUE	CLUTCH HOUSING	CARTER D EMBRAYAGUE	
2	269413	3	ESPARRAGO	STUD	GOUJON	
3	528701	1	RODAMIENTO	BEARING	ROULEMENT	
4	528690	1	PLACA	PLATE	PLAQUE	
5	528683	1	ARANDELA	WASHER	RONDELLE	
6	528685	1	PLACA	PLATE	PLAQUE	
7	181190	3	TUERCA	NUT	ECROU	
8	622045	1	JUNTA	JOINT	JOINT	
9	556379	2	PLACA	PLATE	PLAQUE	
10	576717	4	TORNILLO	BOLT	BOULON	
11	512237	1	TAPA	COVER	COUVERCLE	
12	189130	2	TORNILLO	BOLT	BOULON	
13	3074	2	ARANDELA MUELLE	SPRING WASHER	RONDELLE RESSORT	
14	NH110041	11	TUERCA	NUT	ECROU	
15	WA110061	11	ARANDELA	WASHER	RONDELLE	
16	248720	3	TORNILLO	BOLT	BOULON	
17	181166	4	TUERCA	NUT	ECROU	
18	576718	1	TAPA DELANTERA	FRONT COVER	COUVERCLE AVANT	
19	571059	1	RETEN	RETAINER	ARRETOIR	
20	576724	1	JUNTA	JOINT	JOINT	
21	113631	2	FIJA	DOWEL	TIGE	
22	576720	1	PIVOTE	PIVOT CLUTCH RELE	ROTULE	
23	3968	3	ARANDELA	WASHER	RONDELLE	
24	3074	3	ARANDELA MUELLE	SPRING WASHER	RONDELLE RESSORT	
25	180105	3	TUERCA	NUT	ECROU	
26	WL108001	4	ARANDELA	WASHER	RONDELLE	
27	180108	4	TUERCA	NUT	ECROU	

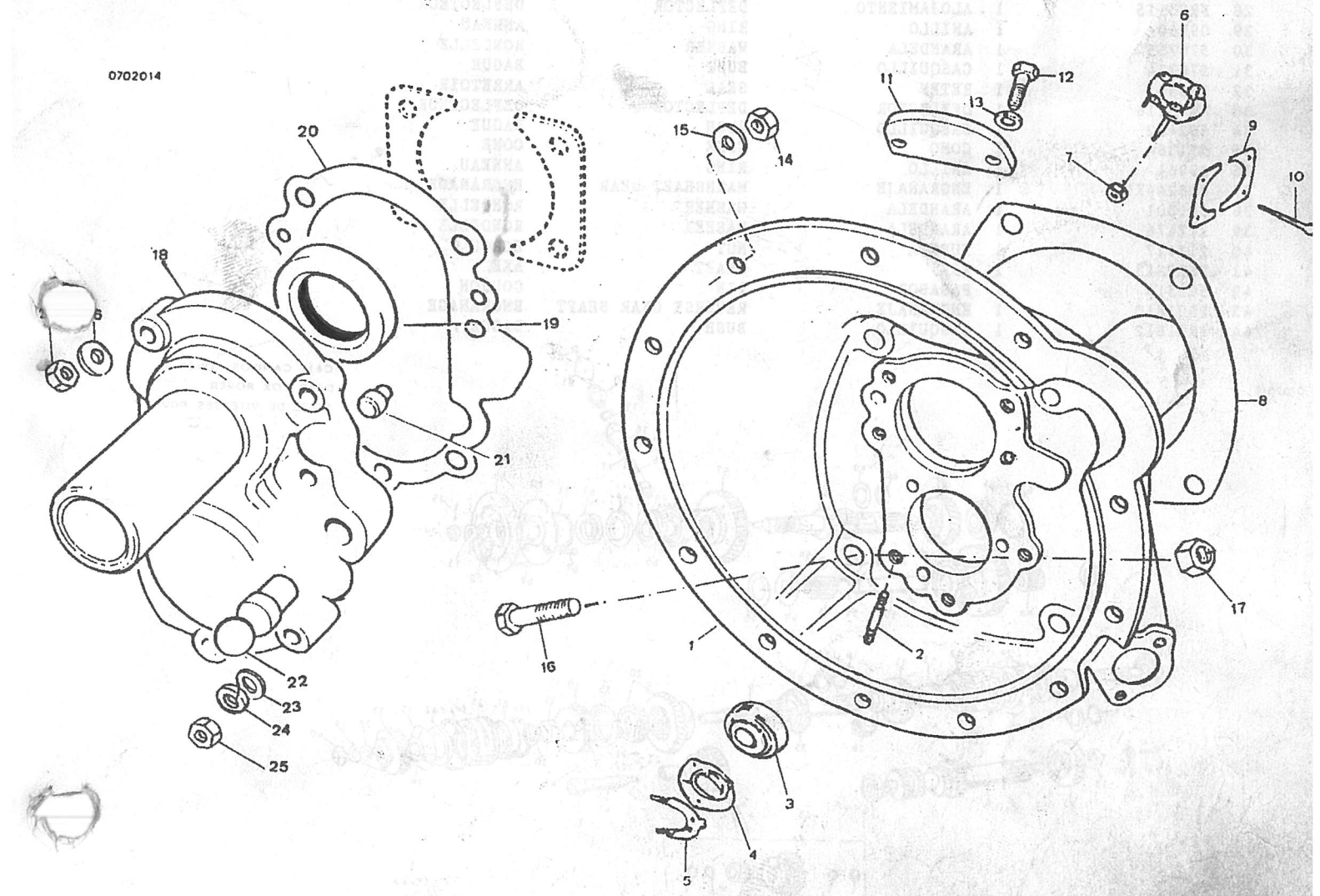

PUBLICACION N:790776 GRUPO=07 CAJA DE VELOCIDAD SUBGRUPO=ENGRANAJES
EDICION N: 1 GROUP=07 GEAR BOX SUBGROUP=GEARS
GROUPE=07 BOITE DE VITESSE SUBGROUPE=ENGRANAGES

N.FIG PLATE N.FIG	N.PIEZA PARTNUMBER N.PIECE	CAN QTY OUT	DENOMINACION	DESCRIPTION	DENOMINATION	OBSERVACIONES
1	FRC8218	1	COJ.PI\ON PRIMARIO	PRIMARY PINION ASSY	PIGNON DE 1 ERE ET P	
2	571435	1	SUPLEMENTO 2,MM	SHIM 2,MM	SUPLEMENTE 2,MM	
3	55714	1	COJINETE	BEARING	COUSSINET	
4	214795	1	ANILLO	RING	ANNEAU	
5	FRC2084	1	EJE INTERMEDIARIO 1A	INTERMEDIATE SH 1 ST	ARBRE INTERME 1 ERE	
6	FRC4225	1	EJE PRINCIPAL	MAINSHAFT	ARBRE PRINCIPALE	
7	06405	1	FIJA	DOWEL	TIGE	
8	09561	1	FIJA	DOWEL	TIGE	
9	264636	1	ARANDELA	WASHER	RONDELLE	
10	FRC3201	1	ENGRANAJE 1A	1ST SPEED GEAR	ENGRANAGE DE 1 ERE	
11	FRC2673	1	ENGRANAJE DE 2	2ND SPEED GEAR	ENGRANAGE DE 2 ERE	
12	FRC8179	1	ENGRANAJE 3	3THSPEED GEAR	ENGRANAGE DE 3 ERE	
13	239706	1	CASQUILLO	BUSH	BAGUE	
14	08188	1	ARANDELA	WASHER	RONDELLE	
15	06402	1	ANILLO	RING	ANNEAU	
16	576907	1	ARANDELA	WASHER	RONDELLE	
17	183262	1	TORNILLO	BOLT	BOULON	
18	528720	1	SEPARADOR	SPACER	ENTRETOISE	
19	55715	1	COJINETE	BEARING	ROULEMENT	
20	FRC8180F1	1	SINCRONIZADOR 1A 2A	SINCHRONISING 1ST 2N	SINCHRONISATION 1ERE	
21	553084	3	DESPLAZABLE	BLOCK	DEPLACABLE	
22	503805	3	MUELLE	SRING	RESSORT	
23	52459	3	BOLA	BALL	BILLE	
24	FRC6996	1	SINCRONIZADOR 3A 4A	SINCHRONISING 3TH 4T	SINCHRONI 3EME 4EME	
25	06395	3	MUELLE	SPRING	RESSORT	
26	06397	1	COJINETE	BEARING	COUSSINET	
27	1645	1	COJINETE	BEARING	COUSSINET	
28	FRC5115	1	ALOJAMIENTO	DEFLECTOR	DEFLECTEUR	
29	09960	1	ANILLO	RING	ANNEAU	
30	576735	1	ARANDELA	WASHER	RONDELLE	
31	576734	1	CASQUILLO	BUSH	BAGUE	
32	236305	1	RETEN	SEAL	ARRETOIR	
33	FRC5116	1	DEFLECTOR	DEFLECTOR	DEFLECTEUR	
34	502482	1	CASQUILLO	BUSH	BAGUE	
35	591364	2	CONO	CONE	CONE	
36	09961	1	ANILLO	RING	ANNEAU	
37	218244K1	1	ENGRANAJE	MAINSHAFT GEAR	ENGRANAGE	
38	501501	1	ARANDELA	WASHER	RONDELLE	
39	217476	1	ARANDELA	WASHER	RONDELLE	
40	217477	1	TUERCA	NUT	ECROU	
41	FRC1813	1	EJE	SHAFT	AXE	
42	591519	1	PASADOR	PIN	GOUJON	
43	FRC1810	1	ENGRANAJE	REVERSE GEAR SHAFT	ENGRANAGE	
44	FRC1812	1	CASQUILLO	BUSH	BAGUE	

0702017

CAJA CAMBIOS ROVER
GEAR BOX ROVER
BOITE DE VITESSES ROVER

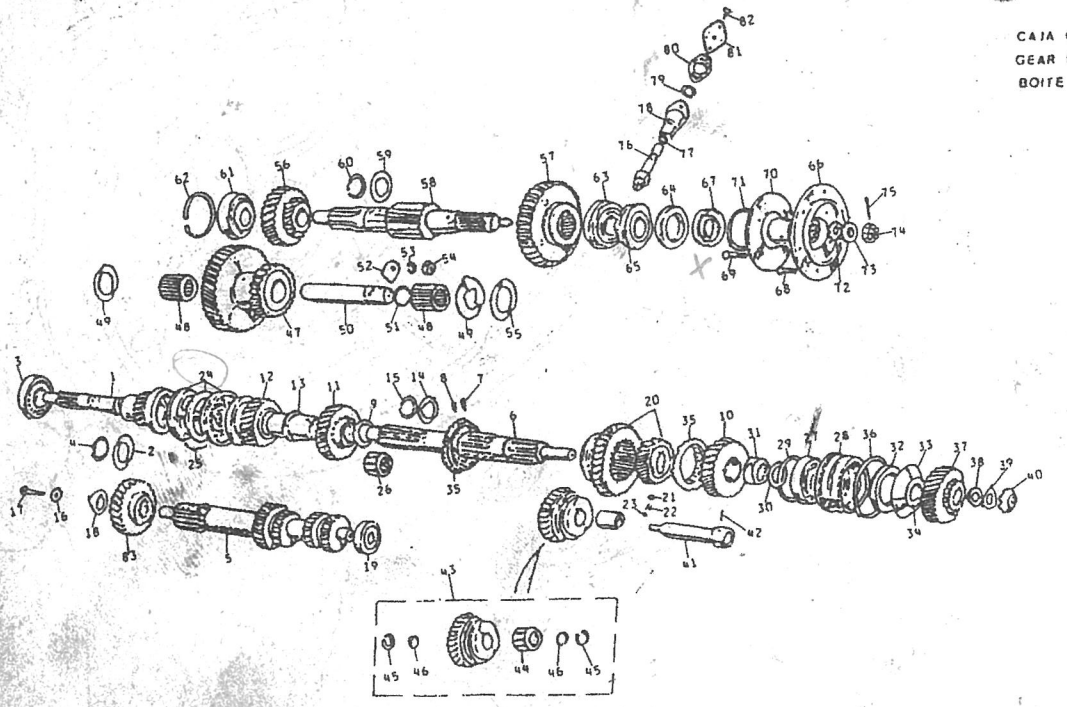

PUBLICACION N:790776 GRUPO-07 CAJA DE VELOCIDAD SUBGRUPO-ENGRANAJES
EDICION N: 1 GROUP-07 GEAR BOX SUBGROUP-GEARS
GROUPE-07 BOITE DE VITESSE SUBGROUPE-ENGRANAGES

N.FIG PLATE N.FIG	N.PIEZA PARTNUMBER N.PIECE	CAN QTY OUT	DENOMINACION	DESCRIPTION	DENOMINATION	OBSERVACIONES
45	FRC1035	2	ANILLO ELASTICO	CIRCLIP	CIRCLIP	
46	FRC1034	2	ARANDELA	WASHER	RONDELLE	
47	533080	1	ENGRANAJE	GEAR CLUSTER	ENGRANAGE	
48	599869	2	COJINETE	BEARING	COUSSINET	
49	521328	2	ARANDELA	WASHER	RONDELLE	
50	594195	1	EJE	SHAFT	AXE	
51	532323	1	ANILLO	RING	ANNEAU	
52	217484	1	PLACA	PLATE	PLAQUE	
53	180426	1	ARANDELA	WASHER	RONDELLE	
54	180107	1	TUERC	NUT	ECROU	
55	121324	1	DISTANCIADOR	SPACER	ENTRETOISE	
56	218243	1	ENGRANAJE	HIGH GEAR WHEEL	ENGRANAGE	
57	532979	1	ENGRANAJE	LOW GEAR WHEEL	ENGRANAGE	
58	591429	1	EJE	REAR OUTPUT SHAFT	AXE	
59	217488	1	ARANDELA	WASHER	RONDELLE	
60	217489	1	ANILLO	RING	ANNEAU	
61	217490	1	COJINETE	BEARING	COUSSINET	
62	217526	1	ANILLO	RING	ANNEAU	
63	217512	1	COJINETE	BEARING	COUSSINET	
64	FRC1780	1	RETEN	SEAL	ARRETOIR	
65	540004	1	SINFIN	ENDLEES	AXE SANS FIN	
66	236544K1	1	CONJ.BRIDA	FLANGE ASSY	ENS FLARQUE	
67	236074	1	GUARDAPOLVOS	DVST COVER	PONE POUSSIERE	
68	217564	3	TORNILLO	BOLT	BOULON	
69	512701	4	TORNILLO	BOLT	BOULON	
70	217568	1	BRIDA	FLANGE	FLARQUE	
71	217546	1	ANILLO	RING	ANNEAU	
72	622042	1	RETEN	SEAL	ARRETOIR	
73	FRC6461	1	ARANDELA	WASHER	RONDELLE	
74	AFU1242	1	TUERCA	NUT	ECROU	
75	180309	1	PASADOR	PIN	GOUJON	
76	237982	1	EJE SINFIN	END LEES	AXE SANS FIN	
77	267828	1	ANILLO	RING	ANNEAU	
78	268791	1	MANGUITO	SLEEVE	MANCHON	
79	211502	1	RETEN	SEAL	ARRETOIR	
80	267782	1	JUNTA	JOINT	JOINT	
81	232565	1	PLACA	PLATE	PLAQUE	
82	180103	2	TORNILLO	BOLT	BOULON	
83	576837	1	ENGRANAJE	GEAR	ENGRANAGE	

CAJA CAMBIOS ROVER
GEAR BOX ROVER
BOITE DE VITESSES ROVER

0702017

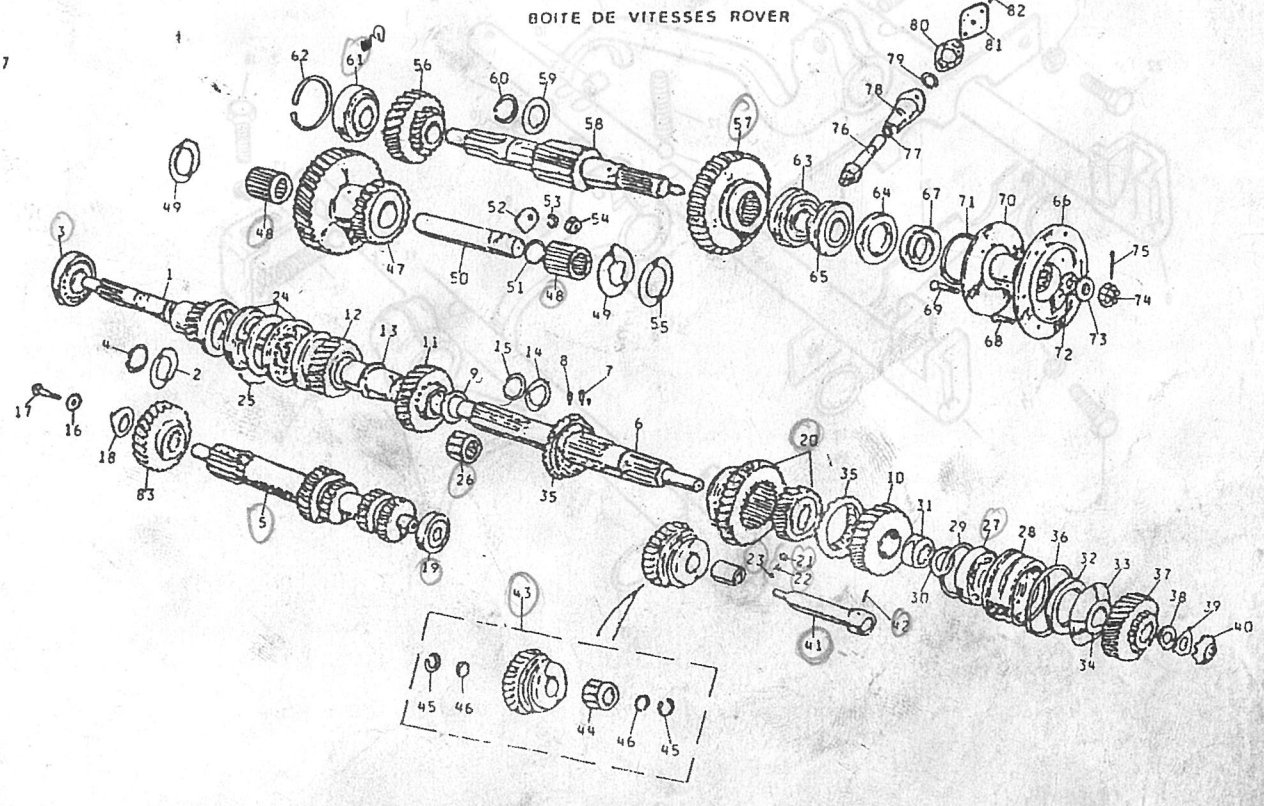

PUBLICACION N:790776 GRUPO=07 CAJA DE VELOCIDAD SUBGRUPO=EJES Y HORQUILLAS
EDICION N: 1 GROUP=07 GEAR BOX SUBGROUP=SELECTORS LEVERS
GROUPE=07 BOITE DE VITESSE SUBGROUPE=AXES ET FOURCHETTES

N.FIG PLATE N.FIG	N.PIEZA PARTNUMBER N.PIECE	CAN QTY OUT	DENOMINACION	DESCRIPTION	DENOMINATION	OBSERVACIONES
1	06422	1	HORQUILLA 3A Y 4A	SELECTOR FORK 3RD 4T	FOURCHETTE 3EME 4 4E	
2	213636	1	EJE SELECTOR 3A Y 4A	SELECTOR SHA 3TH 4TH	FOURCHETTE 3EME 4EME	
3	576703	1	HORQUILLA 1A Y 2A	SELECTOR FORK 1ST 2N	FOURCHETTE 1ERE 2ND	
4	FRC5896	1	EJE SELECTOR 1A Y 2A	SELECTOR SHA 1SY 2ND	AXE SELECTIF 1ERE 2N	
5	55697	1	PASADOR	PIN	GOUJON	
6	571145	1	FIJA	DOWEL	TIGE	
7	FRC1815	1	HORQUILLA MA	FORK SR	FOURCHETTE MA	D 10-80 E52079024
8	576729	1	EJE SELECTOR MA	SELECTOR SHAFT SR	AXE SELECTIF MA	
9	217564	3	TORNILLO	BOLT	BOULON	
10	55638	2	PIVOTE	KNUCKLE	ROTULE	
11	1643	3	BOLA	BALL	BILLE	
12	03649	2	MUELLE	SPRING	RESSORT	
13	56102	1	MUELLE	SPRING	RESSORT	
14	05853	1	PLACA	PLATE	PLAQUE	
15	05854	1	PLACA	PLATE	PLAQUE	
16	05852	2	ANILLO	RING	ANNEAU	
17	3074	8	ARANDELA	WASHER	RONDELLE	
18	215758	8	TORNILLO	BOLT	BOULON	
19	272596	2	ANILLO	RING	ANNEAU	
20	272597	1	ANILLO	RING	ANNEAU	
21	241598	2	PLACA	OLATE	PLAQUE	
22	215769	1	TORNILLO	BOLT	BOULON	2'5 ESPECIAL
23	154647	1	SOPORTE	SUPPORT	SUPPORT	2'5 ESPECIAL

0702018

CAJA CAMBIOS ROVER
GEAR BOX ROVER
BOITE DE VITESSES ROVER

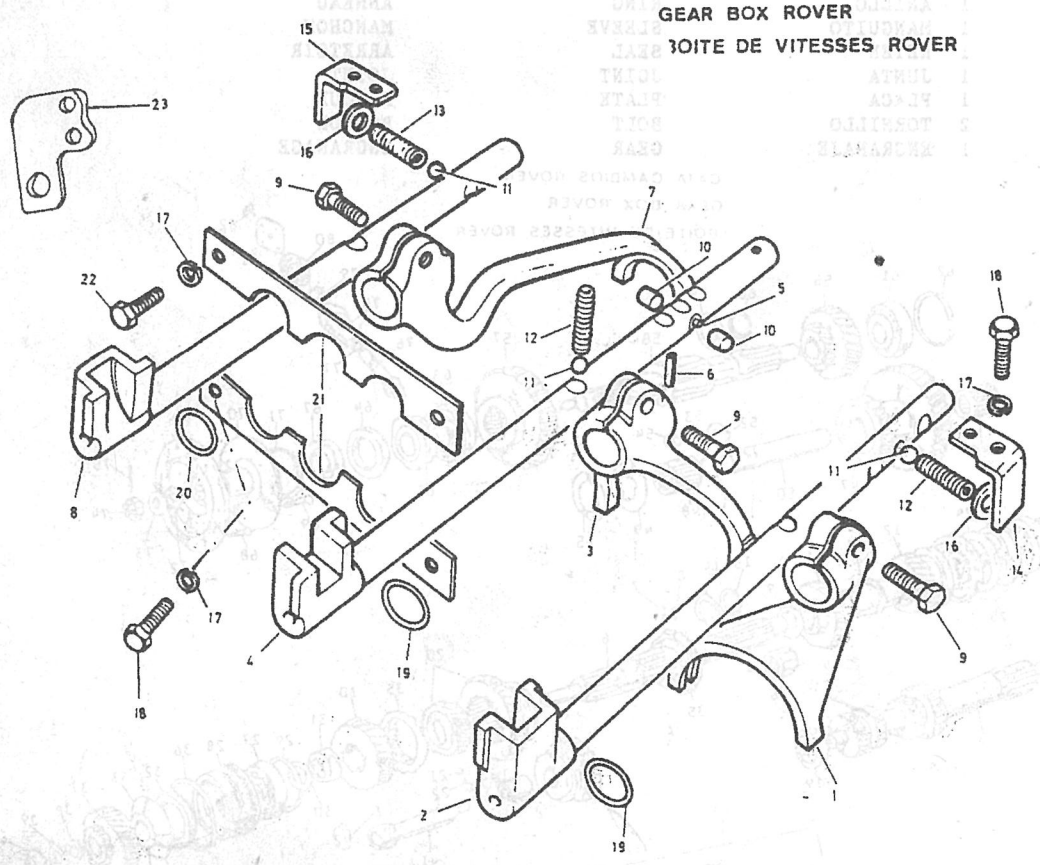

PUBLICACION N:790776 GRUPO-07 CAJA DE VELOCIDAD SUBGRUPO-PALANCA DE VELOCIDAD
EDICION N: 1 GROUP-07 GEAR BOX SUBGROUP-SPEED LEVER
GROUPE-07 BOITE DE VITESSE SUBGROUPE-LEVIER DE VITESSES

N.FIG PLATE N.FIG	N.PIEZA PARTNUMBER N.PIECE	CAN QTY OUT	DENOMINACION	DESCRIPTION	DENOMINATION	OBSERVACIONES
1	127666	1	CONJ.PALANCA CAMBIO	GEAR CHANGE LEVER AS	ENS DE LEVIER DE BOI	
2	127665	1	PALANCA CAMBIO	GEAR CHANGE LEVER	LEVIER DE BOITE DE V	
3	127639	1	ALOJAMIENTO PALANCA	HOUSING LEVER	CARTER DE LEVIER	
4	121439	1	PASADOR	BOLT PIN	BOULON GOUPILLE	
5	120859	1	ANILLO	RING	ANNEAU	
6	219721	1	ASIENTO GOMA	RUBBER SEAT	SIEGE RUBBER	
7	540354	1	ANILLO	RING	ANNEAU	
8	219723	1	MUELLE	SPRING	RESSORT	
9	219722	1	ARANDELA PLANA	PLAIN WASHER	RONDELLE PLANE	
10	219797	1	ANILLO ELASTICO	CIRCLIP	CIRCLIP	
11	232608	1	SOPORTE	SUPPORT	SUPPORT	
12	180187	4	TORNILLO	BOLT	BOULON	
13	WM108001	4	ARANDELA	WASHER	RONDELLE	
14	189130	2	TORNILLO	BOLT	BOULON	
15	3074	2	ARANDELA MUELLE	SPRING WASHER	RONDELLE RESSORT	
16	502203	1	TOPE	STOP	BUTTER	
17	78120	1	TORNILLO	SCREW	VIS	
18	180124	1	TUERCA	NUT	ECROU	
19	231116	2	MUELLE	SPRING	RESSORT	
20	502205	1	SOPORTE	SUPPORT	SUPPORT	
21	183138	2	TORNILLO	BOLT	BOULON	2'5 ESPECIAL
	622281	2	TORNILLO	BOLT	BOULON	2'5 BASICO
22	052257	2	ARANDELA ESTRELLA	STAR WASHER	RONDELLE ETOILE	
23	121342	1	EMPU/ADURA	CONTROL KNOB	BOUTON	
24	156446	1	TOPE	STOP	BUTTER	2'5 ESPECIAL

07020192

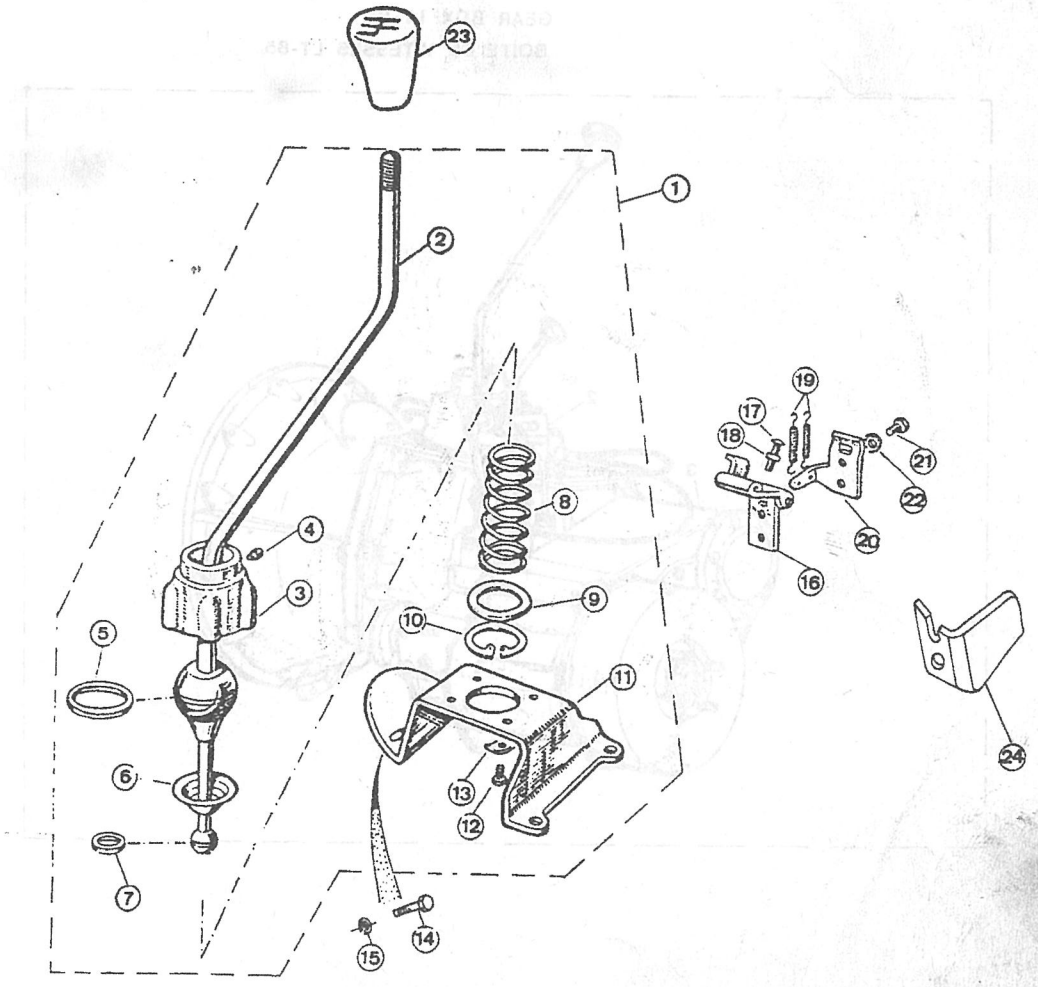

PUBLICACION N:790776 GRUPO=07 CAJA DE VELOCIDAD SUBGRUPO=CAJA DE VELOCID.LT85
EDICION N: 1 GROUP=07 GEAR BOX SUBGROUP=GEAR BOX LT85
GROUPE=07 BOITE DE VITESSE SUBGROUPE=BOITE DE VITESE LT85

N.FIG PLATE N.FIG	N.PIEZA PARTNUMBER N.PIECE	CAN QTY OUT	DENOMINACION	DESCRIPTION	DENOMINATION	OBSERVACIONES
1	127624	1	CONJ CAJA 5 VELOCIDA	GEAR BOX ASSY 5 SPEE	ENS BOITES VITESSES	2500
2	FRC6073K2	1	CAJA 5 VELOCIDADES	GEAR BOX 5 SPEEDS	BOITE 5 VITESSES	
3	FRC6383K3	1	CAJA DE TRANSFERENCI	TRANSFER CASING	BOITE DE TRANSFER	

0704011

CAJA CAMBIOS LT-85
GEAR BOX LT-85
BOITE DE VITESSES LT-85

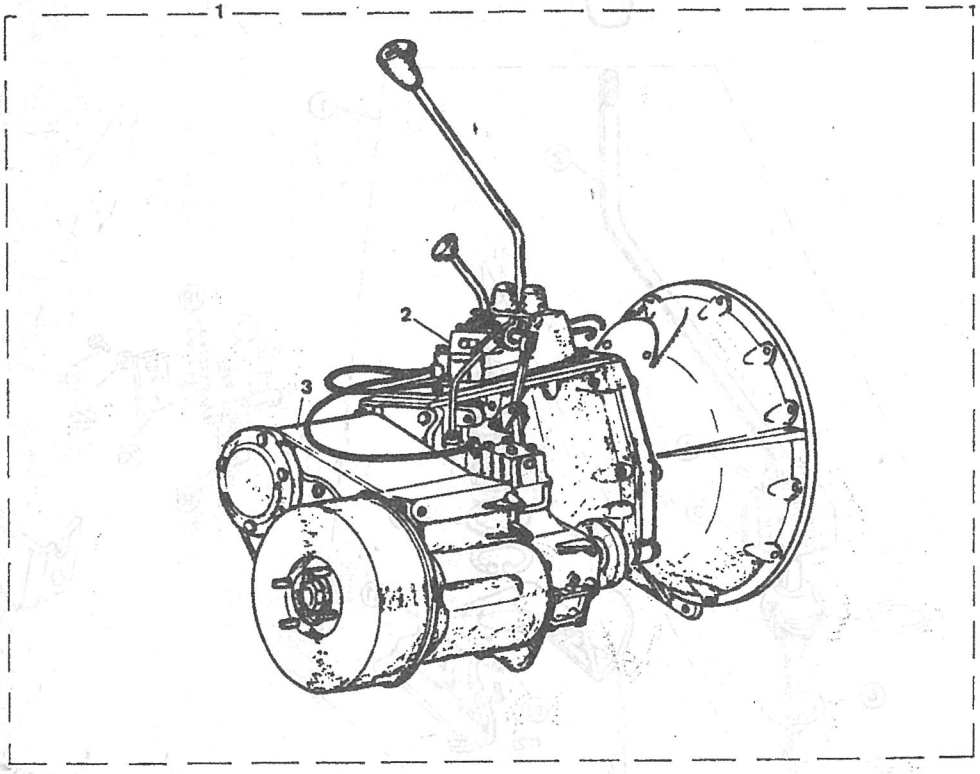

PUBLICACION N:790776 GRUPO=07 CAJA DE VELOCIDAD SUBGRUPO=CARTER CAJA VELOCIDA
EDICION N: 1 GROUP=07 GEAR BOX SUBGROUP=GEAR BOX CARTER
GROUPE=07 BOITE DE VITESSE SUBGROUPE=CARTER BOITE DE VITE

N.FIG PLATE N.FIG	N.PIEZA PARTNUMBER N.PIECE	CAN QTY OUT	DENOMINACION	DESCRIPTION	DENOMINATION	OBSERVACIONES
1	FRC9524	1	CARTER CAJA CAMBIOS	GEAR BOX HOUSING	CARTER BOITE DE VITE	D 4-87 E71707251
2	185251	2	TORNILLO	BOLT	BOULON	
3	WM108001	2	ARANDELA MUELLE	WASHER-SPRING	RONDELLE ELASTIQUE	
4	WA108051	2	ARANDELA PLANA	WASHER-PLAIN	RONDELLE PLATE	
5	571134	2	FIJA	DOWEL	TIGE	
6	185233	5	TORNILLO	BOLT	BOULON	
7	WL108001	5	ARANDELA MUELLE	WASHER-SPRING	RONDELLE ELASTIQUE	
8	3292	1	TAPON	PLUG	BOUCHON	
9	FRC3412	1	TAPON	PLUG	BOUCHON	
10	FRC3073	1	JUNTA	JOINT WASHER	JOINT	
11	121410	2	FIJA	DOWEL	TIGE	
12	185201	1	ARANDELA PLANA	PLAIN WASHER	RONDELLE PLANE	
13	166786	1	INTERRUPTOR	SWITCH	INTERRUPTEUR	
14	FRC2626	2	PASADOR ELASTICO	ELASTIC PIN	GOUJON ELASTIQUE	
15	3290	1	TAPON	PLUG	BOUCHON	
16	FRC2487	1	JUNTA	JOINT	JOINT	
17	FRC8380	1	PLACA	PLATE	PLAQUE	
18	SH108301	2	TORNILLO	BOLT	BOULON	
19	185265	2	TORNILLO	BOLT	BOULON	
	SB108201	2	TORNILLO	BOLT	BOULON	ALTERNATIVO
20	WL108001	2	ARANDELA MUELLE	SPRING WASHER	RONDELLE RESSORT	

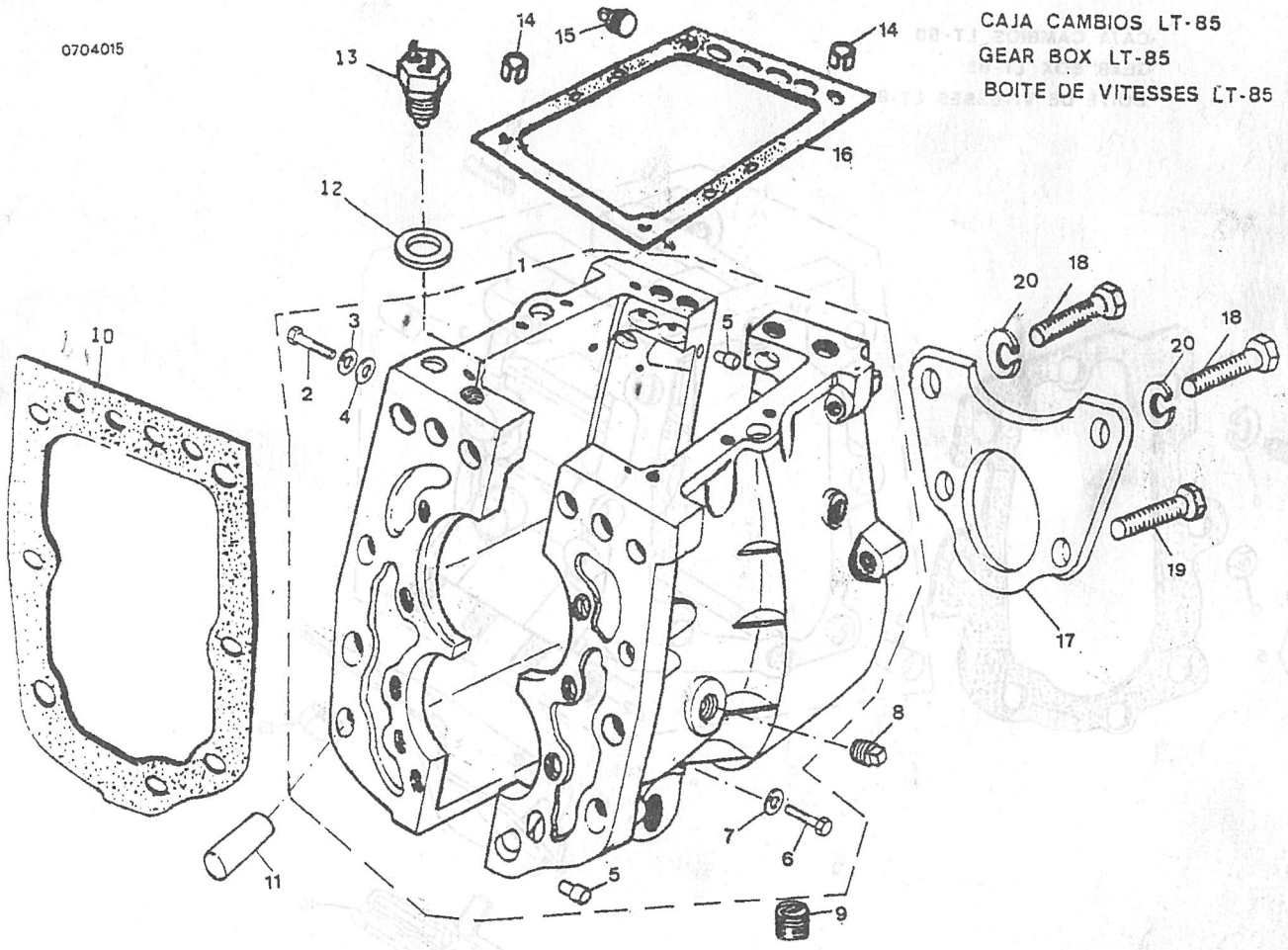

PUBLICACION N:790776 GRUPO=07 CAJA DE VELOCIDAD SUBGRUPO=CARTER DE PROLONGACI
EDICION N: 1 GROUP=07 GEAR BOX SUBGROUP=EXTENSION CARTER
GROUPE=07 BOITE DE VITESSE SUBGROUPE=CARTER PROLONGATION

N.FIG PLATE N.FIG	N.PIEZA PARTNUMBER N.PIECE	CAN QTY OUT	DENOMINACION	DESCRIPTION	DENOMINATION	OBSERVACIONES
1	127539	1	CARTER	GEAR BOX	CARTER	
2	121212	4	ESPARRAGO	STUD	GOUJON	
3	FRC2482	2	FIJA	DOWEL	TIGE	
4	FRC2465F1	1	JUNTA	JOINT	JOINT	
5	WL110001	8	ARANDELA	WASHER	RONDELLE	
6	BH110121	2	TORNILLO	BOLT	BOULON	
7	BH110101	3	TORNILLO	BOLT	BOULON	
8	BH110091	3	TORNILLO	BOLT	BOULON	
9	NH110041	1	TUERCA	NUT	ECROU	
10	111263	1	GOMA DE SUSPENSION	SUSPENSION RUBBER	SILENTBLOCK	
11	810503	1	TUERCA	NUT	ECROU	
12	127520	1	SOPORTE	SUPPORT	SUPPORT	
13	810502	4	TUERCA	NUT	ECROU	
14	FRC3166	1	ESPARRAGO	STUD	GOUJON	

0704016

CAJA CAMBIOS LT-85
GEAR BOX LT-85
BOITE DE VITESSES LT-85

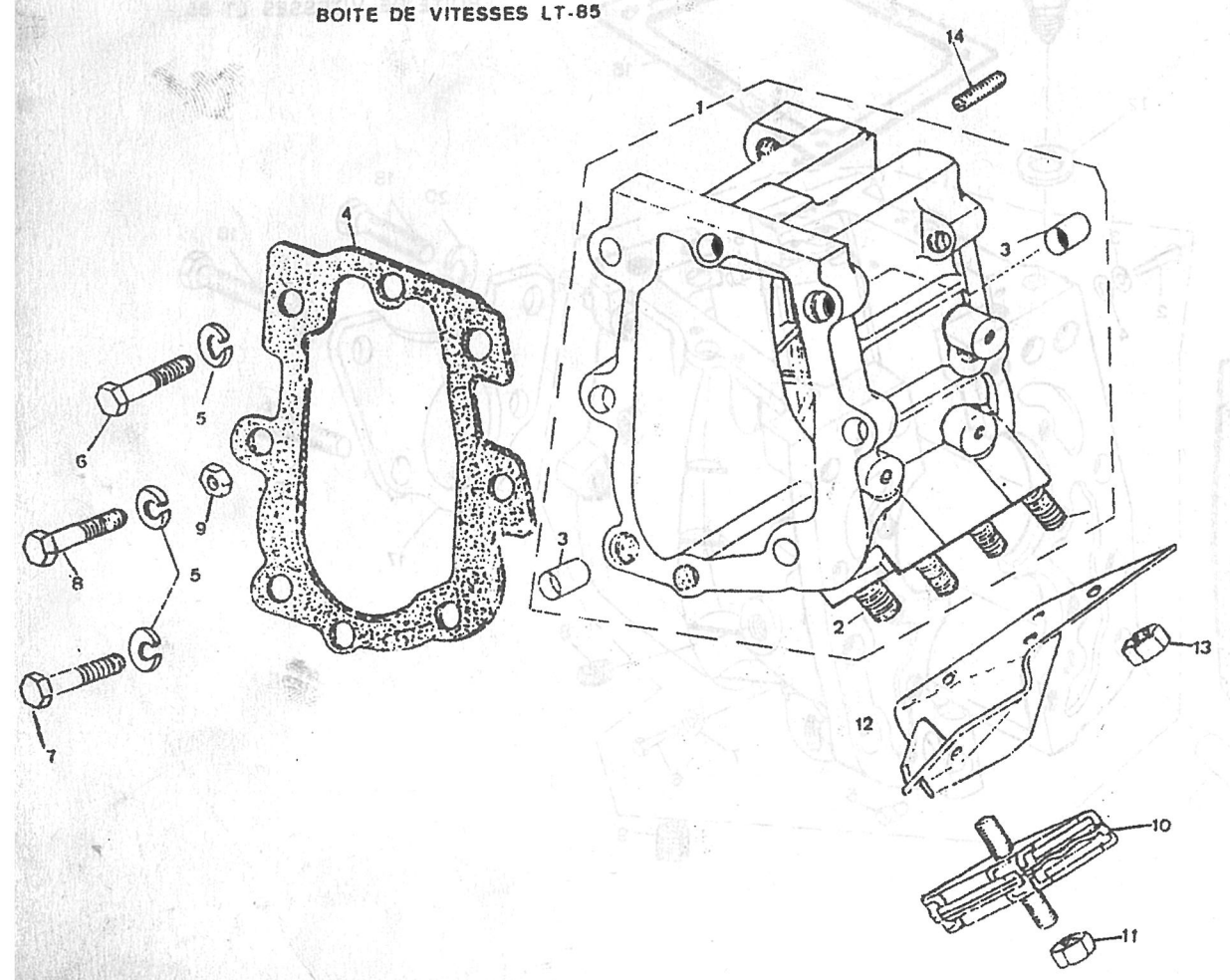

PUBLICACION N:790776 GRUPO=07 CAJA DE VELOCIDAD SUBGRUPO=CARTER DE EMBRAGUE
EDICION N: 1 GROUP=07 GEAR BOX SUBGROUP=CLUCHT CARTER
GROUPE=07 BOITE DE VITESSE SUBGROUPE=CARTER DE EMBRAYAGE

N.FIG PLATE N.FIG	N.PIEZA PARTNUMBER N.PIECE	CAN QTY OUT	DENOMINACION	DESCRIPTION	DENOMINATION	OBSERVACIONES
1	121499	1	CARTER DE EMBRAGUE	CLUTCH HOUSING	CARTER DE EMBRAYAGE	
2	512237	1	TAPA	COVER	COUVERCLE	
3	SH106161	2	TORNILLO	BOLT	BOULON	
4	WL106001	2	ARANDELA	WASHER	RONDELLE	
5	FRC5180K2	1	PIVOTE	KNUCKLE	ROTULE	
6	BH108061	2	TORNILLO	BOLT	BOULON	
7	WL108001	2	ARANDELA	WASHER	RONDELLE	
8	SH112451	6	TORNILLO	BOLT	BOULON	
9	WL112001	6	ARANDELA	WASHER	RONDELLE	
10	SH106301	1	TORNILLO	BOLT	BOULON	
11	NH106041	1	TUERCA	NUT	ECROU	
12	NH110041	11	TUERCA	NUT	ECROU	
13	WA110061	11	ARANDELA	WASHER	RONDELLE	

0204018

CAJA CAMBIOS LT-85
GEAR BOX LT-85
BOITE DE VITESSES LT-85

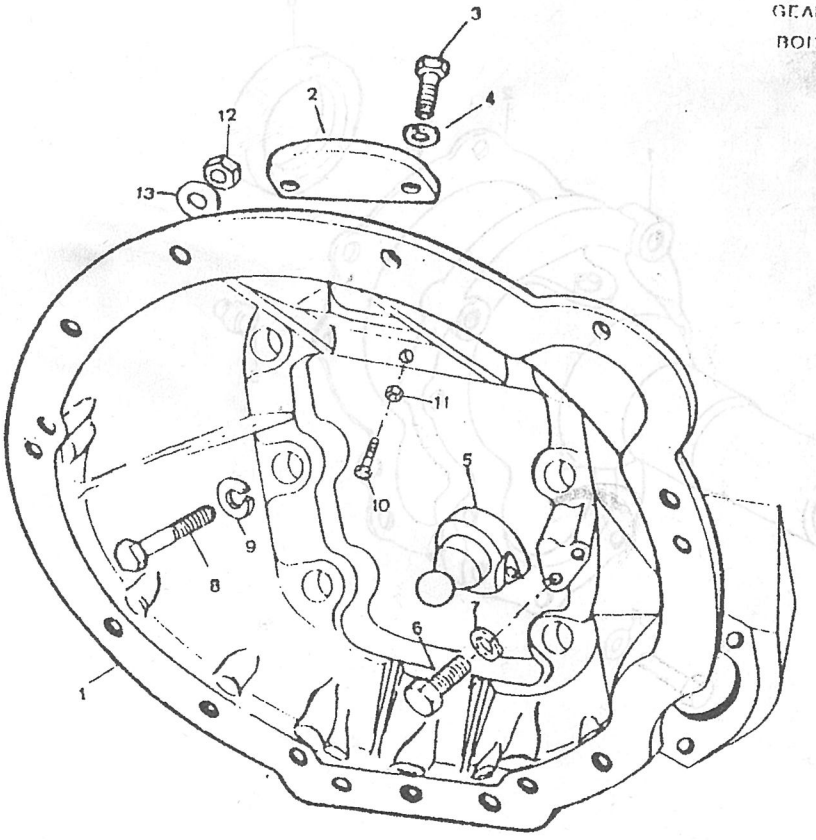

PUBLICACION N:790776 GRUPO=07 CAJA DE VELOCIDAD SUBGRUPO=TAPA DELANTERA
EDICION N: 1 GROUP=07 GEAR BOX SUBGROUP=FRONT COVER
GROUPE=07 BOITE DE VITESSE SUBGROUPE=COUVERCLE AVANT

N.FIG PLATE N.FIG	N.PIEZA PARTNUMBER N.PIECE	CAN QTY OUT	DENOMINACION	DESCRIPTION	DENOMINATION	OBSERVACIONES
1	FRC8216	1	TAPA DELANTERA	FRONT COVER	COUVERCLE AVANT	2500 CON LT85
2	FRC8215	1	JUNTA	JOINT	JOINT	
3	SH108301	7	TORNILLO	BOLT	BOULON	
4	WL108001	7	ARANDELA MUELLE	SPRING WASHER	RONDELLE RESSORT	
5	571134	2	FIJA	DOWEL	TIGE	
6	FRC2361	1	RETEN	SEAL	ARRETOIR	

07040190

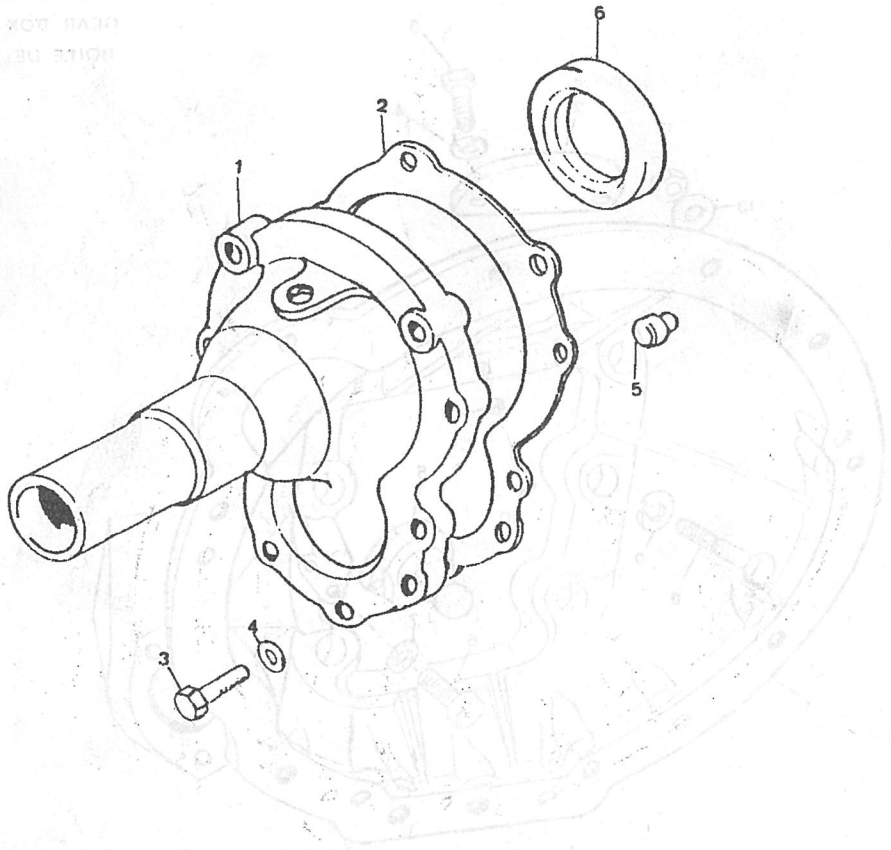

PUBLICACION N:790776 GRUPO=07 CAJA DE VELOCIDAD SUBGRUPO=ENGRANAJES
EDICION N: 1 GROUP=07 GEAR BOX SUBGROUP=GEARS
GROUPE=07 BOITE DE VITESSE SUBGROUPE=ENGRANAGES

N.FIG PLATE N.FIG	N.PIEZA PARTNUMBER N.PIECE	CAN QTY OUT	DENOMINACION	DESCRIPTION	DENOMINATION	OBSERVACIONES
1	FRC8206	1	PI/ON PRIMARIO 4 C	PRIMARY PINION 4 C	PIGNON DE 1 ERE 4 C	
2	FRC2301F1	1	RODAMIENTO	BEARING	ROULEMENT	
3	FRC2449	1	SUPLEMENTO	SHIM	SUPLEMENT	
4	FRC2488	1	ANILLO ELASTICO	CIRCLIP	CIRCLIP	
5	06397	1	RODAMIENTO	BEARING	ROULEMENT	
6	FRC2488	1	ANILLO ELASTICO	CIRCLIP	CIRCLIP	
7	FRC2554	S-N	SUPLEMENTO 3 470 490	SHIM 3 470 490	SUPLEMENT 3 470 490	
	FRC2555	S-N	SUPLEMENTO 3 420 440	SHIM 3 420 440	SUPLEMENT 3 420 440	
	FRC2556	S-N	SUPLEMENTO 3 370 390	SHIM 3 370 390	SUPLEMENT 3 370 390	
8	194404	1	SINCRONIZADOR 3A 4A	SYNCHRONISING 3ND 4N	SYNCHRONISATION 3EME	
9	FRC8139	1	SELEC.Y NUCLEO 3A-4A	3-4TH SPEED SELE.COR	3-4 VITESSE SEL.NOYA	
10	52459	3	BOLA	BALL	BILLE	
11	503805	3	MUELLE	SPRING	RESSORT	
12	FRC7752	3	DESLIZADOR	DISPLACEABLE	DESPLAZABLE	
13	121332	2	CONO	CONE	CONE	
14	FRC3898	1	SEPARADOR	SPACER	ENTRETOISE	
15	121501	1	RODAMIENTO	BEARING	ROULEMENT	
16	FRC8210	1	ENGRANAJE 3A	GEAR 3ND	ENGRANAGE 3EME	
17	FRC8209	1	ENGRANAJE 2A	GEAR 2ND	ENGRANAGE 2ND	
18	121501	1	RODAMIENTO	BEARING	ROULEMENT	
19	FRC3898	1	SEPARADOR	SPACER	ENTRETOISE	
20	FRC8214	1	EJE PRINCIPAL	PRINCIPAL SHAFT	AXE PRINCIPAL	
21	194403	1	SINCRONIZACION 1A 2A	SINCHRONISING 1ST 2N	SYNCHRONISATION 1ER	
22	FRC9556	1	SELEC.Y NUCLEO 1A 2A	1ST-2N SPEED SELE.CO	1-2 VITESSE SEL.NOYA	
23	52459	3	BOLA	BALL	BILLE	
24	503805	3	MUELLE	SPRING	RESSORT	
25	FRC7752	3	DESLIZADOR	DISPLACEABLE	DESPLAZABLE	
26	121332	2	CONO	CONE	CONE	
27	FRC3897	1	SEPARADOR	SPACER	ENTRETOISE	
28	121501	1	RODAMIENTO	BEARING	ROULEMENT	
29	FRC8208	1	ENGRANAJE 1A	GEAR 1ST	ENGRANAGE 1ER	
30	FRC8422	1	CASQUILLO 50 77-82	BUSH 50 77-82	BAGUE 50 77-82	
31	FRC8400	S-N	SUPLEMENTO 1 15	SHIM 1 15	SUPLEMENT 1 15	
	FRC8401	S-N	SUPLEMENTO 1 20	SHIM 1 20	SUPLEMENT 1 20	
	FRC8402	S-N	SUPLEMENTO 1 25	SHIM 1 25	SUPLEMENT 1 25	
	FRC8403	S-N	SUPLEMENTO 1 30	SHIM 1 30	SUPLEMENT 1 30	
	FRC8404	S-N	SUPLEMENTO 1 35	SHIM 1 35	SUPLEMENT 1 35	
	FRC8405	S-N	SUPLEMENTO 1 40	SHIM 1 40	SUPLEMENT 1 40	
	FRC8406	S-N	SUPLEMENTO 1 45	SHIM 1 45	SUPLEMENT 1 45	
32	FRC2301F1	1	RODAMIENTO	BEARING	ROULEMENT	
33	FRC2488	1	ANILLO ELASTICO	CIRCLIP	CIRCLIP	
34	FRC8217	1	ARANDELA EMPUJE 5A	THRUST WASHER 5TH	RONDELLE DE BUT 5EME	
35	FRC8211	1	ENGRANAJE 5A	GEAR 5TH	ENGRANAGE 5EME	
36	194405	1	SINCRONIZADOR 5A	SINCHRONISING 5TH	SYNCHRONISATION 5EME	

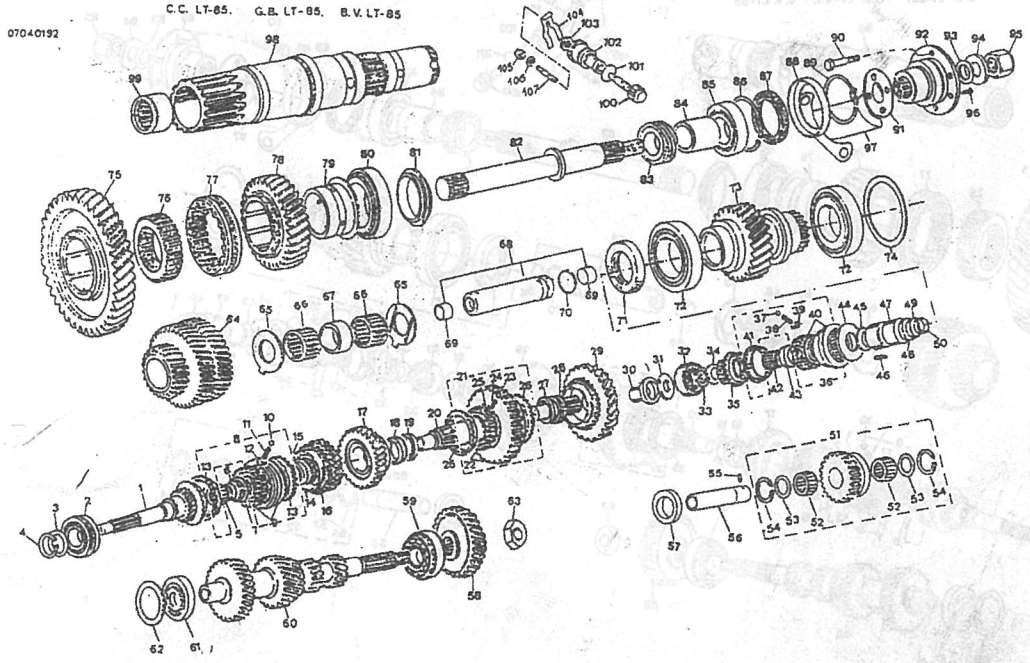

PUBLICACION N:790776 GRUPO=07 CAJA DE VELOCIDAD SUBGRUPO=ENGRANAJES
EDICION N: 1 GROUP=07 GEAR BOX SUBGROUP=GEARS
GROUPE=07 BOITE DE VITESSE SUBGROUPE=ENGRANAGES

N.FIG PLATE N.FIG	N.PIEZA PARTNUMBER N.PIECE	CAN QTY OUT	DENOMINACION	DESCRIPTION	DENOMINATION	OBSERVACIONES
37	52459	3	BOLA	BALL	BILLE	
38	503805	3	MUELLE	SPRING	RESSORT	
39	FRC7752	3	DESLIZADOR 5A	DISPLAZABLE 5TH	DESPLAZABLE 5EME	
40	FRC8176	1	SELECTOR Y NUCLEO 5A	5THSPEED SELE.CORE	5 VITESSE SEL.NOYA	
41	121332	1	CONO	CONE	CONE	
42	FRC2479	1	RODAMIENTO 5A	BEARING 5TH	ROULEMENT 5EME	
43	FRC3896	1	SEPARADOR 5A	SPACER 5TH	ENTRETOISE 5EME	
44	FRC7753	1	PLACA 5A	PLATE 5TH	PLAQUE 5EME	
45	FRC2457	1	ANILLO	RING	ANNEAU	
46	FRC8409K1	1	PASADOR	PIN	GOUJON	
47	FRC5317K1	1	ALOJAMIENTO	HOUSING	CARTER	
48	FRC2365	1	RETEN	RETAINER	ARRETOIR	
49	FRC5602	S-N	ARANDELA 4 25 MM	WASHER 4 25 MM	RONDELLE 4 25 MM	
	FRC5603	S-N	ARANDELA 4 30 MM	WASHER 4 30 MM	RONDELLE 4 30 MM	
	FRC5604	S-N	ARANDELA 4 35 MM	WASHER 4 35 MM	RONDELLE 4 35 MM	
	FRC5605	S-N	ARANDELA 4 40 MM	WASHER 4 40 MM	RONDELLE 4 40 MM	
	FRC5606	S-N	ARANDELA 4 45 MM	WASHER 4 45 MM	RONDELLE 4 45 MM	
	FRC5607	S-N	ARANDELA 4 50 MM	WASHER 4 50 MM	RONDELLE 4 50 MM	
	FRC5608	S-N	ARANDELA 4 55 MM	WASHER 4 55 MM	RONDELLE 4 55 MM	
	FRC5609	S-N	ARANDELA 4 60 MM	WASHER 4 60 MM	RONDELLE 4 60 MM	
	FRC5610	S-N	ARANDELA 4 65 MM	WASHER 4 65 MM	RONDELLE 4 65 MM	
	FRC5611	S-N	ARANDELA 4 70 MM	WASHER 4 70 MM	RONDELLE 4 70 MM	
	FRC5612	S-N	ARANDELA 4 75 MM	WASHER 4 75 MM	RONDELLE 4 75 MM	
	FRC5613	S-N	ARANDELA 4 80 MM	WASHER 4 80 MM	RONDELLE 4 80 MM	
	FRC5614	S-N	ARANDELA 4 85 MM	WASHER 4 85 MM	RONDELLE 4 85 MM	
	FRC5615	S-N	ARANDELA 4 90 MM	WASHER 4 90 MM	RONDELLE 4 90 MM	
	FRC5616	S-N	ARANDELA 4 95 MM	WASHER 4 95 MM	RONDELLE 4 95 MM	
	FRC5617	S-N	ARANDELA 5 00 MM	WASHER 5 00 MM	RONDELLE 5 00 MM	
50	FRC4494	1	ANILLO DE PRESION	PRESSURE RING	ANNEAU DE PRESSION	
51	FRC3319	1	ENGRANAJE M A	GEAR SR ASSY	ENS ENGRANAGE MA	
52	FRC1032	2	RODAMIENTO	BEARING	ROULEMENT	
53	FRC1034	2	ARANDELA	WASHER	RONDELLE	
54	FRC1035	2	ANILLO ELASTICO	CIRCLIP	CIRCLIP	
55	591519	1	PASADOR	PIN	GOUJON	
56	FRC3112	1	EJE M A	SHAFT SR	AXE MA	
57	FRC8421	1	ARANDELA	WASHER	RONDELLE	
58	FRC3795	1	ENGRANAJE 5A	GEAR 5TH	ENGRANAGE 5EME	
59	FRC2470	1	RODAMIENTO	BEARING	ROULEMENT	
60	FRC8213	1	EJE SECUNDARIO	2ND SHAFT	AXE DE 2EME	
61	FRC2578	1	RODAMIENTO	BEARING	ROULEMENT	
62	FRC3987	1	SEPARADOR	SPACER	ENTRETOISE	
63	FRC3806	1	TUERCA	NUT	ECROU	
64	FRC5422	1	ENGRANAJE INTERMEDIO	INTERMEDIATE GEAR	ENGRANAGE INTERMEDI	
65	FRC6861	2	ARANDELA	WASHER	RONDELLE	

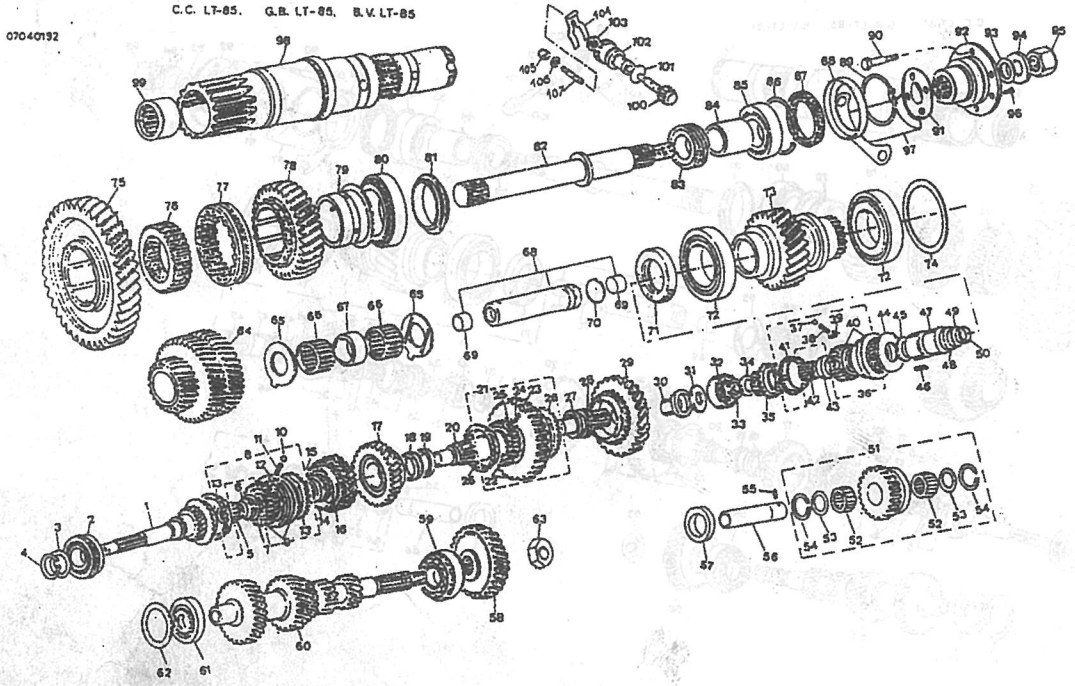

PUBLICACION N:790776 GRUPO=07 CAJA DE VELOCIDAD SUBGRUPO=ENGRANAJES
EDICION N: 1 GROUP=07 GEAR BOX SUBGROUP=GEARS
GROUPE=07 BOITE DE VITESSE SUBGROUPE=ENGRANAGES

N.FIG PLATE N.FIG	N.PIEZA PARTNUMBER N.PIECE	CAN QTY OUT	DENOMINACION	DESCRIPTION	DENOMINATION	OBSERVACIONES
66	594290	2	RODAMIENTO	BEARING	ROULEMENT	
67	FRC6862	1	SEPARADOR	SPACER	ENTRETOISE	
68	FRC5454F1	1	CONJ. EJE	SHAFT ASSY	ENS AXE	
69	GO4099	2	TAPON	PLUG	BOUCHON	
70	532323	1	ANILLO	RING	ANNEAU	
71	FRC2365	1	RETEN	SEAL	RETAINER	
72	FRC5564	2	RODAMIENTO	BEARING	ROULEMENT	
73	FRC5428K1	1	ENGRANAJE TRANSFEREN	MESH PINNION	PIGNON TRANSFERT	
74	FRC6536	S-N	SUPLEMENTO 3 20 MM	SHIM 3 20 MM	SUPPLEMENT 3 20 MM	
	FRC6537	S-N	SUPLEMENTO 3 25 MM	SHIM 3 25 MM	SUPPLEMENT 3 25 MM	
	FRC6538	S-N	SUPLEMENTO 3 30 MM	SHIM 3 30 MM	SUPPLEMENT 3 30 MM	
	FRC6539	S-N	SUPLEMENTO 3 35 MM	SHIM 3 35 MM	SUPPLEMENT 3 35 MM	
	FRC6540	S-N	SUPLEMENTO 3 40 MM	SHIM 3 40 MM	SUPPLEMENT 3 40 MM	
	FRC6541	S-N	SUPLEMENTO 3 45 MM	SHIM 3 45 MM	SUPPLEMENT 3 45 MM	
	FRC6542	S-N	SUPLEMENTO 3 50 MM	SHIM 3 50 MM	SUPPLEMENT 3 50 MM	
	FRC6543	S-N	SUPLEMENTO 3 55 MM	SHIM 3 55 MM	SUPPLEMENT 3 55 MM	
	FRC6544	S-N	SUPLEMENTO 3 60 MM	SHIM 3 60 MM	SUPPLEMENT 3 60 MM	
	FRC6545	S-N	SUPLEMENTO 3 65 MM	SHIM 3 65 MM	SUPPLEMENT 3 65 MM	
	FRC6546	S-N	SUPLEMENTO 3 70 MM	SHIM 3 70 MM	SUPPLEMENT 3 70 MM	
	FRC6547	S-N	SUPLEMENTO 3 75 MM	SHIM 3 75 MM	SUPPLEMENT 3 75 MM	
	FRC6548	S-N	SUPLEMENTO 3 80 MM	SHIM 3 80 MM	SUPPLEMENT 3 80 MM	
	FRC6549	S-N	SUPLEMENTO 3 85 MM	SHIM 3 85 MM	SUPPLEMENT 3 85 MM	
	FRC6550	S-N	SUPLEMENTO 3 90 MM	SHIM 3 90 MM	SUPPLEMENT 3 90 MM	
	FRC6551	S-N	SUPLEMENTO 3 95 MM	SHIM 3 95 MM	SUPPLEMENT 3 95 MM	
	FRC6552	S-N	SUPLEMENTO 4 00 MM	SHIM 4 00 MM	SUPPLEMENT 4 00 MM	
75	FRC5435	1	ENGRANAJE	GEAR	ENGRANAGE	
76	FRC5681	1	ENGRANAJE	GEAR	ENGRANAGE	
77	FRC7111	1	ENGRANAJE	GEAR	ENGRANAGE	
78	FRC5423	1	ENGRANAJE	GEAR	ENGRANAGE	
79	FRC5436	1	CASQUILLO	BUSB	BAGUE	
80	711420	1	RODAMIENTO	BEARING	ROULEMENT	
81	FRC6098	1	TUERCA	NUT	ECROU	
82	FRC5450	1	EJE	SHAFT	AXE	
83	FRC3162	1	SINFIN VELOCIMETRO	SPEEDOMETER ENDLESS	SANS FIN DE CONTEUR	
84	FRC5446	1	SEPARADOR	SPACER	ENTRETOISE	
85	214797	1	RODAMIENTO	BEARING	ROULEMENT	
86	216962	1	ANILLO ELASTICO	CIRCLIP	CIRCLIP	
87	FRC7043	1	RETEN	OIL SEAL	RETAINER	
88	571970	1	PROTECTOR	PROTECTOR	PROTECTEUR	
89	189410	1	ANILLO ELASTICO	CIRCLIP	CIRCLIP	
90	FRC3602K1	4	TORNILLO	BOLT	BOULON	
91	217568	1	CHAPA DE RETENCION	RETENTION PLATE	TOLE DE RETENTION	
92	121398	1	BRIDA	BRIDE	FLANGE	
93	FRC2464	1	RETEN	SEAL	RETAINER	

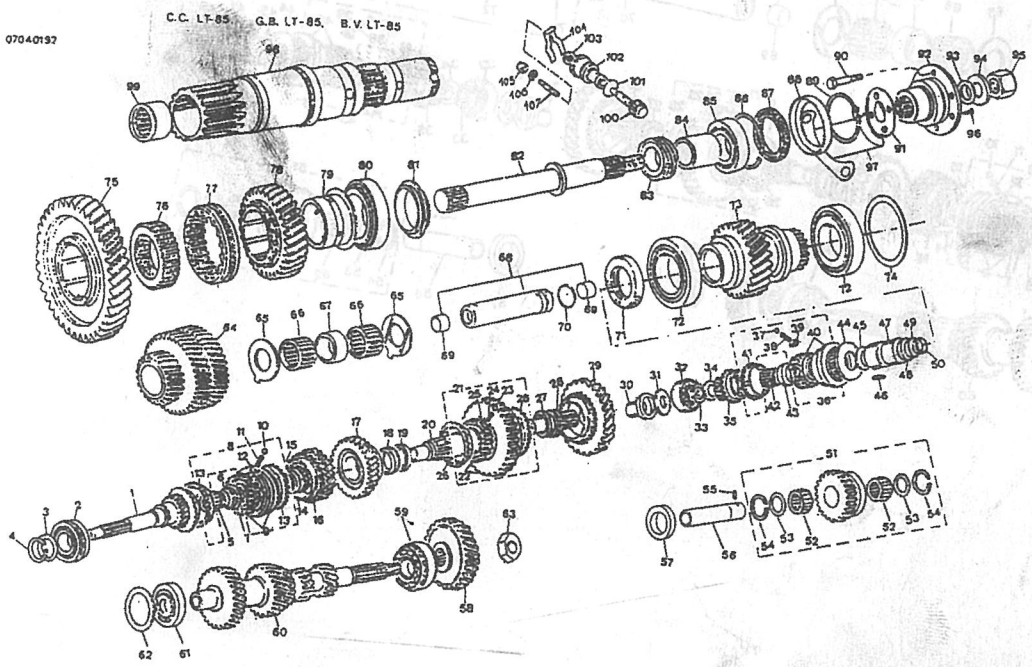

PUBLICACION N:790776 GRUPO=07 CAJA DE VELOCIDAD SUBGRUPO=ENGRANAJES
EDICION N: 1 GROUP=07 GEAR BOX SUBGROUP=GEARS
GROUPE=07 BOITE DE VITESSE SUBGROUPE=ENGRANAGES

N.FIG PLATE N.FIG	N.PIEZA PARTNUMBER N.PIECE	CAN QTY OUT	DENOMINACION	DESCRIPTION	DENOMINATION	OBSERVACIONES
94	571468	1	ARANDELA	WASHER	RONDELLE	
95	NY120041	1	TUERCA	NUT	ECROU	
96	217564	3	TORNILLO	BOLT	BOULON	
97	121396	1	DEFLECTOR ACEITE	OIL DEFLECTOR	DEFLECTEUR DE HUILE	
98	FRC6069	1	EJE	SHAFT	AXE	
99	FRC5498	1	RODAMIENTO	BEARING	ROULEMENT	
100	FRC3310	1	ENGRANAJE	GEAR	ENGRANAGE	
101	571665	1	ANILLO	RING	ANNEAU	
102	FRC3286	1	ALOJAMIENTO	HOUSING	CARTER	
103	88108757	1	RETEN	SEAL	RETAINER	
104	533765	1	PLACA	PLATA	PLAQUE	
105	NY106041	1	TUERCA	NUT	ECROU	
106	WA106041	1	ARANDELA	WASHER	RONDELLE	
107	571536	1	ESPARRAGO	STUD	GOUJON	

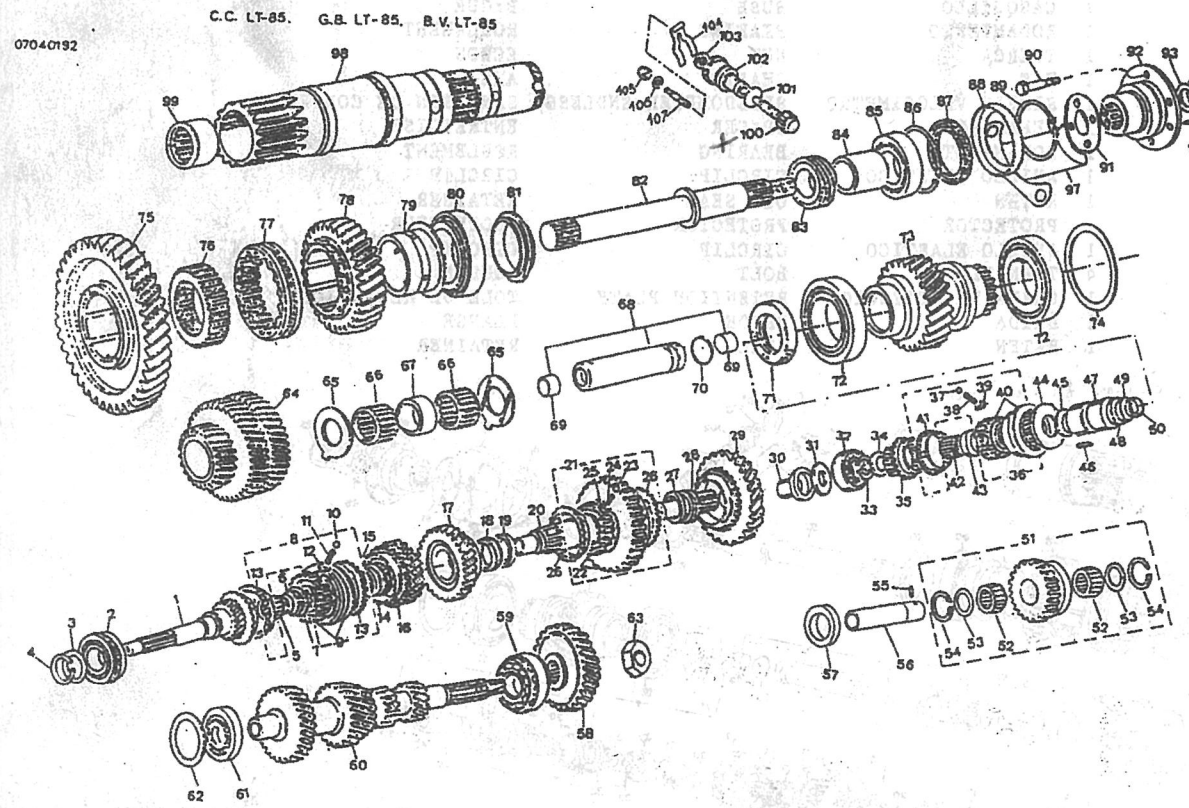

PUBLICACION N:790776
EDICION N: 1

GRUPO=07 CAJA DE VELOCIDAD
GROUP=07 GEAR BOX
GROUPE=07 BOITE DE VITESSE

SUBGRUPO=PALANCA DE VELOCIDAD
SUBGROUP=SPEED LEVER
SUBGROUPE=LEVIER DE VITESSES

N.FIG PLATE N.FIG	N.PIEZA PARTNUMBER N.PIECE	CAN QTY OUT	DENOMINACION	DESCRIPTION	DENOMINATION	OBSERVACIONES
1	121500	1	TAPA SUPERIOR	TOP COVER ASSY	ENS COUVERCLE	
2	SH106101	1	TORNILLO	BOLT	BOULON	
3	FRC5816K2	1	PALANCA	LEVER	LEVIER	
4	FRC2614	1	GUARDAPOLVOS	DUST COVER	PARE POUSSIERE	
5	FRC2622	2	PASADOR	PIN	GOUJON	
6	FRC2623	4	PLACA	PLATE	PLAQUE	
7	FRC3146	2	MUELLE EXTERIOR	OUTSIDE SPRING	RESSORT EXTERIEUR	
8	FRC2587	2	MUELLE INTERIOR	INSIDE SPRING	RESSORT INTERIEUR	
9	FRC2612	1	ANILLO	RING	ANNEAU	
10	FRC2583	1	TAPA	COVER	COUVERCLE	
11	FRC2648	1	JUNTA	JOINT	JOINT	
12	GS112141	2	TORNILLO	SCREW	VIS	
13	SH106251	4	TORNILLO	BOLT	BOULON	
14	WL106001	4	ARANDELA	WASHER	RONDELLE	
15	240430	1	ABRAZADERA	CLAMP	ETRIER	
16	FRC5486	1	JUNTA	JOINT	JOINT	
17	121344	1	EMPU/ADURA	CONTROL KNOB	BOUTON	
18	622324	1	CLIP	CLIP	CLIP	
19	FRC4062	1	TUBERIA	PIPE	TUYAU	
20	595478	1	TORNILLO	BOLT	BOULON	
21	599575	2	ARANDELA	WASHER	RONDELLE	
22	SH108401	8	TORNILLO	BOLT	BOULON	
23	WL108001	8	ARANDELA	WASHER	RONDELLE	
24	3292	1	TAPON	PLUG	BOUCHON	
25	FRC6124	1	ALOJAMIENTO	HOUSING	CARTER	
26	SH108251	3	TORNILLO	BOLT	BOULON	
27	BH108111	1	TORNILLO	BOLT	BOULON	
28	WL108001	4	ARANDELA	WASHER	RONDELLE	
29	FRC5483	1	PLACA	PLATE	PLAQUE	
30	FRC6872	1	GUARDAPOLVOS	DUST COVER	PARE POUSSIERE	
31	FRC6873	1	PLACA	PLATE	PLAQUE	
32	SH106201	4	TORNILLO	BOLT	BOULON	
33	WL106001	4	ARANDELA	WASHER	RONDELLE	

070618

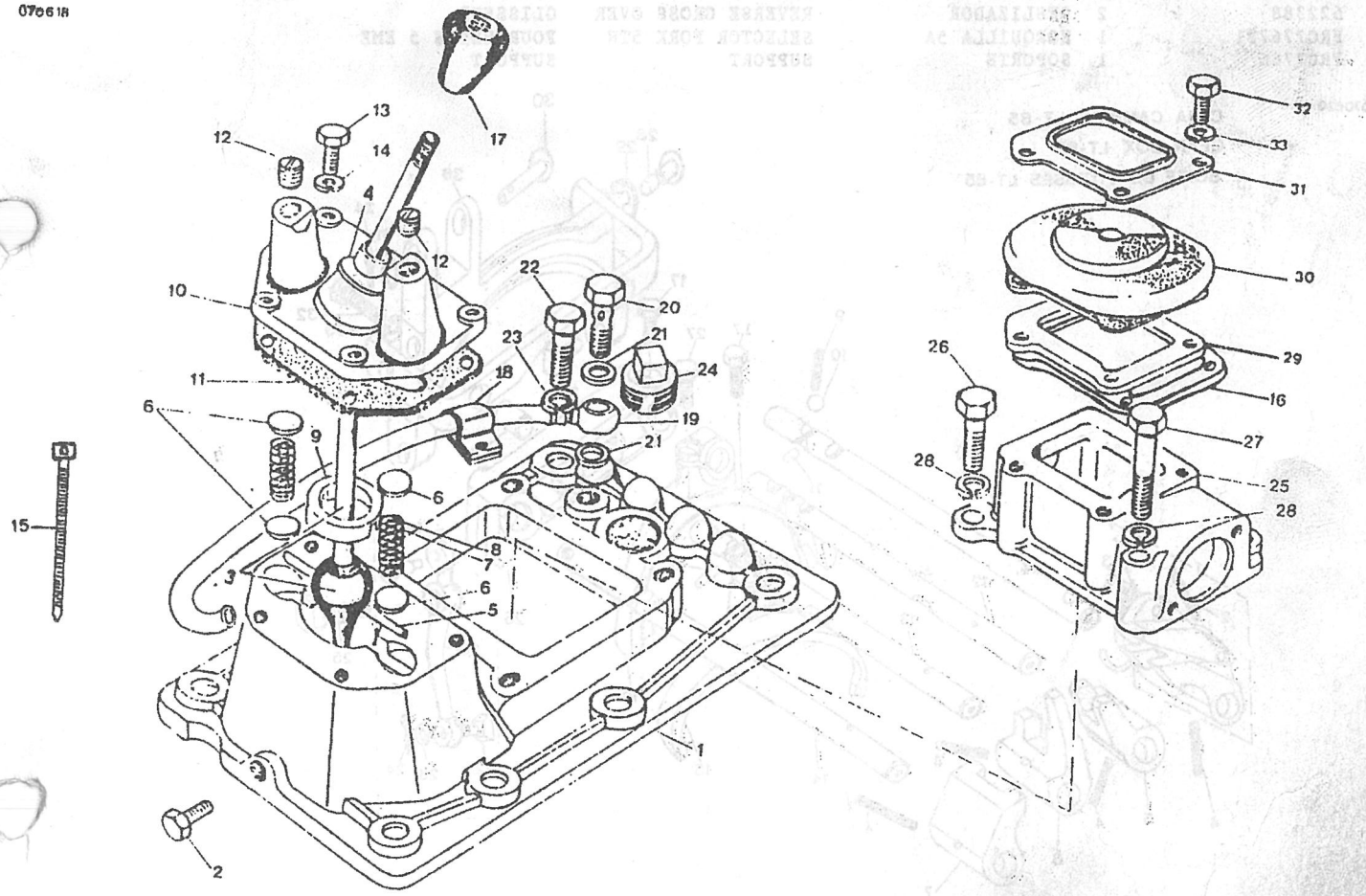

PUBLICACION N:790776 GRUPO=07 CAJA DE VELOCIDAD SUBGRUPO=EJES Y HORQUILLAS
EDICION N: 1 GROUP=07 GEAR BOX SUBGROUP=SELECTORS LEVERS
GROUPE=07 BOITE DE VITESSE SUBGROUPE=AXES ET FOURCHETTES

N.FIG PLATE N.FIG	N.PIEZA PARTNUMBER N.PIECE	CAN QTY OUT	DENOMINACION	DESCRIPTION	DENOMINATION	OBSERVACIONES
1	FRC8455	1	CABEZA SELECTORA MA	SELECTOR HEAD S R	TALON SELECTEUR M A	
2	FRC2601	1	PASADOR	PIN	GOUJON	
3	FRC3481	1	MUELLE	SPRING	RESSORT	
4	571158	4	PASADOR	PIN	GOUJON	
5	FRC8452	1	CABEZA SELECTO.1A 2A	SELECTOR HEA 1ST 2ND	TALON SELECTE 1 2EME	
6	FRC8452	1	CABEZA SELECTO 3A 4A	SELECTOR HEA 3TH 4TH	TALON SELECTE 3 4EME	
7	FRC8454	1	CABEZA SELECTORA 5A	SELECTOR HEAD 5TH	TALON SELECTEUR 5EME	
8	FRC8270	1	EJE SELECTOR M A	SELECTOR SHAFT S R	AXE SELECTEUR M A	
9	593802	4	MUELLE	SPRING	RESSORT	
10	571146	4	BOLA	BALL	BILLE	
11	FRC2577	3	FIJA	DOWELL	TIGE	
12	FRC2381	1	EJE SELECTOR 1A 2A	SELECTOR SHA 1ST 2ND	AXE SELECT 1ERE 2EME	
13	FRC3118	1	EJE SELECTOR 3A 4A	SELECTOR 3TH 4TH	AXE SELECT 3EME 4EME	
14	FRC3282	1	EJE SELECTOR 5A	SELECTOR SHA 5TH	AXE SELECT 5TH	
15	FRC7754F1	1	HORQUILLA 3A 4A	SELECTOR FOR 3TH 4TH	FOURCHETTE 3EME 4EME	
16	FRC7769F1	1	HORQUILLA 1A 2A	SELECTOR FOR 1ST 2ND	FOURCHETTE 1ERE 2EME	
17	SH108301	2	TORNILLO	BOLT	BOULON	
18	FRC3117	2	PASADOR	PIN	GOUJON	
19	FRC2390	1	CONJ.PALANCA M A	LEVER ASSY S R	ENS LEVIER M A	
20	FRC2364	1	PALANCA M A	LEVER S R	LEVIER M A	
21	571042	1	PASADOR	PIN	GOUJON	
22	571043	1	DESLIZADOR	REVERSE CROSS OVER	GLISSEUR	
23	WA108051	1	ARANDELA	WASHER	RONDELLE	
24	PS103121	2	PASADOR	PIN	GOUPILLE	
25	FRC2370	1	TORNILLO	BOLT	BOULON	
26	FRC2368	1	BALANCIN M A	EQUALIZER LEVER S R	LEVIER VOLEE M A	
27	BX108351	1	TORNILLO	BOLT	BOULON	
28	UKC2089	2	PASADOR	PIN	GOUJON	
29	UKC2105	2	ANILLO ELASTICO	CIRCLIP	CIRCLIP	
30	PC106561	1	PASADOR	PIN	GOUJON	
31	WA106041	1	ARANDELA	WASHER	RONDELLE	
32	SH108301	2	TORNILLO	BOLT	BOULON	
33	WA108051	2	ARANDELA	WASHER	RONDELLE	
34	FRC2481	2	FIJA	DOWEL	TIGE	
35	622388	2	DESLIZADOR	REVERSE CROSS OVER	GLISSEUR	
36	FRC7767F1	1	HORQUILLA 5A	SELECTOR FORK 5TH	FOURCHETTE 5 EME	
37	FRC7766	1	SOPORTE	SUPPORT	SUPPORT	

070620

CAJA CAMBIOS LT-85
GEAR BOX LT-85
BOITE DE VITESSES LT-85

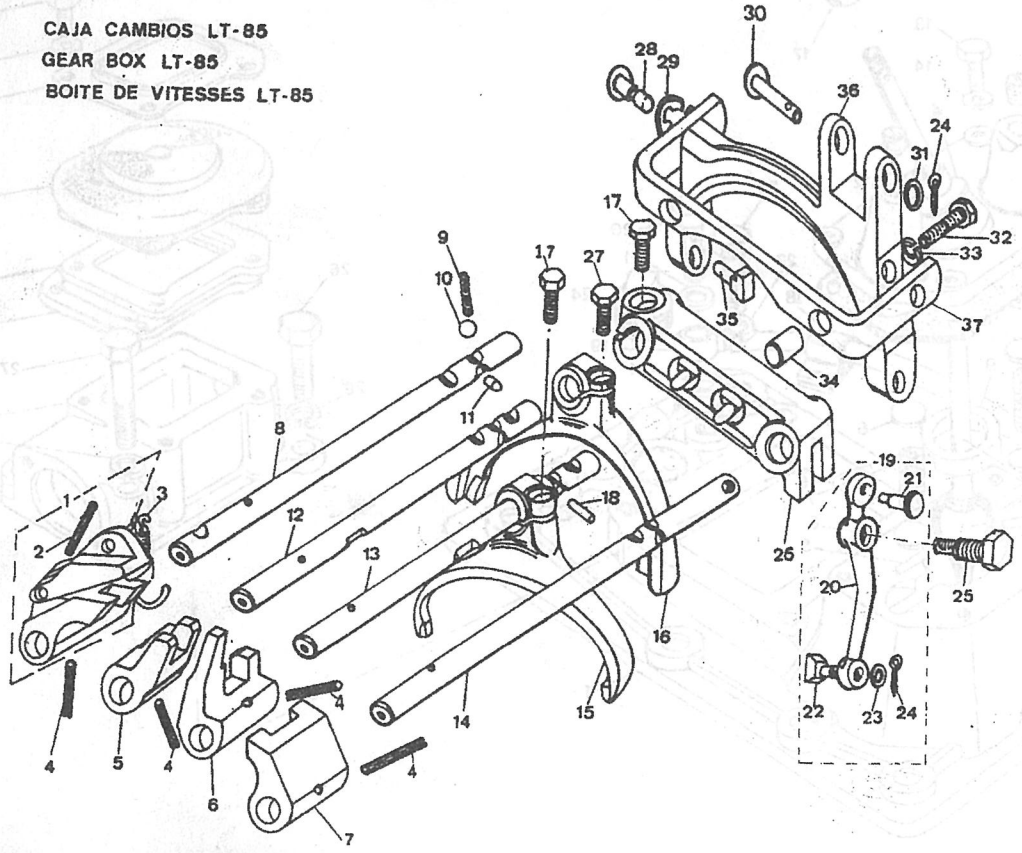

GRUPO 08 08 CAJA DE TRANSFERE

GROUP 08 08 TRANSFER CASING

GROUP 08 08 BOITE DE TRANSFER

COMPOSICION.....COMPOSITION.....COMPOSICION

REFERENCIA PARTNUMBER NUM.PIECE	DENOMINACION	DESCRIPTION	DENOMINATION
080104	CARTER DE TRANSFEREN	TRANSFER CASING	CARTER DE TRANSFER
080109	CARTER DE TRANSFEREN	TRANSFER CASING	CARTER DE TRANSFER
080202	PALANCA Y TIRANTES	SELECTOR SHAFT	DISPOSITTIF D'ATTAQU
080210	PALANCA Y TIRANTES	SELECTOR SHAFT	DISPOSITTIF D'ATTAQU
080211	HORQUILLAS	FORKS	FOURCHETTE
080307	CAJA DEL EJE DE SALI	FRONT OUTPUT SHAFT H	CARTER D'ARBRE DE CO
080315	CAJA DEL EJE DE SALI	FRONT OUTPUT SHAFT H	CARTER D'ARBRE DE CO

PUBLICACION N:790776 GRUPO=08 CAJA DE TRANSFERE SUBGRUPO=CARTER DE TRANSFEREN
EDICION N: 1 GROUP=08 TRANSFER CASING SUBGROUP=TRANSFER CASING
GROUPE=08 BOITE DE TRANSFER SUBGROUPE=CARTER DE TRANSFER

N.FIG PLATE N.FIG	N.PIEZA PARTNUMBER N.PIECE	CAN QTY OUT	DENOMINACION	DESCRIPTION	DENOMINATION	OBSERVACIONES
1	127483	1	CARTER TRANSFERENCIA	TRANSFER CASING	CARTER DE BOITE TRAN	2.5B-2.5 ESPECIAL
2	217778	1	ESPARRAGO	SUTD	GOUJON	
3	237251	1	ESPARRAGO	SUTD	GOUJON	
4	3650	11	ESPARRAGO	STUD	GOUJON	
5	217978	4	ESPARRAGO	SUTD	GOUJON	
6	180111	6	ESPARRAGO	SUTD	GOUJON	
7	232497	1	ESPARRAGO	STUD	GOUJON	
8	217976	8	ESPARRAGO	STUD	GOUJON	
9	55636	4	FIJA	DOWEL	TIGE	
10	522318	1	CAJA CUENTAKILOMETRO	SPEEDOMETER PINION	CARTER DE PIGNON	
11	232846	1	FIJA	DOWEL	TIGE	
12	217977	4	ESPARRAGO	STUD	GOUJON	
13	3292	1	TAPON	PLUG	BOUCHON	
14	FRC3264	S-N	SUPLEMENTO 0 040"	SHIM 0 040"	SUPLEMENT 0 040"	
	FRC3265	S-N	SUPLEMENTO 0 015"	SHIM 0 015"	SUPPLEMENT 0 015"	
	FRC3267	S-N	SUPLEMENTO 0 005"	SHIM 0 005"	SUPPLEMENT 0 005"	
	FRC3268	S-N	SUPLEMENTO 0 003"	SHIM 0 003"	SUPPLEMENT 0 003"	
15	180426	13	ARANDELA	WASHER	RONDELLE	
16	180107	13	TUERCA	NUT	ECROU	
17	FRC1141	1	CONJ ALOJAMIENTO	HOUSING ASSY	ENSEMBLE DU CARTER	
18	FRC1102	1	CASQUILLO	BUSH	BAGUE	
19	217478	1	COJINETE	BEARING	COUSSINET	
20	622047	1	JUNTA	JOINT	JOINT	
21	217970	1	TAPA	COVER	COUVERCLE	
22	230140	1	JUNTA	JOINT	JOINT	
23	WM108001	6	ARANDELA	WASHER	RONDELLE	
24	180108	6	TUERCA	NUT	ECROU	
25	528235	1	CUBIERTA	COVER	COUVERCLE	
26	790756	S-N	SELLANTE TB 1215	SEALING TB 1215	SCELLER TB 1215	
27	3074	4	ARANDELA	WASHER	RONDELLE	
28	215758	4	TORNILLO	BOLT	BOULON	
29	218259F2	1	CUBIERTA	COVER	COUVERCLE	
30	FRC3412	1	TAPON	PLUG	BOUCHON	
31	240407	1	CLIP	CLIP	CLIP	
32	180139	3	TUERCA AUTOFRENANTE	SELF-LOCKING NUT	AUTOFRENAINTE ECROU	
33	06860	1	GOMA	RUBBER	CAOUTCHOUC	
34	272185	1	SOPORTE L/I	SUPPORT LH	SUPPORT CG	
35	531104	1	SOPORTE L/D	SUPPORT RH	SUPPORT CD	
36	267412	1	PLACA	PLATE	PLAQUE	
37	187175	8	TUERCA	NUT	ECROU	
38	215758	10	TORNILLO	BOLT	BOULON	
39	3074	10	ARANDELA	WASHER	RONDELLE	
40	3946	10	ARANDELA	WASHER	RONDELLE	
41	180181	2	TORNILLO	BOLT	BOULON	

080104

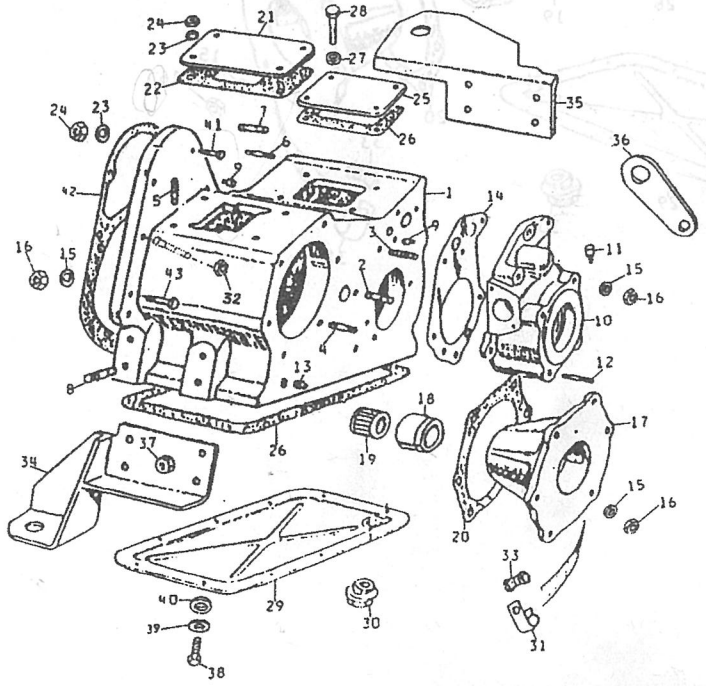

PUBLICACION N:790776 GRUPO=08 CAJA DE TRANSFERE SUBGRUPO=CARTER DE TRANSFEREN
EDICION N: 1 GROUP=08 TRANSFER CASING SUBGROUP=TRANSFER CASING
GROUPE=08 BOITE DE TRANSFER SUBGROUPE=CARTER DE TRANSFER

N.FIG PLATE N.FIG	N.PIEZA PARTNUMBER N.PIECE	CAN QTY OUT	DENOMINACION	DESCRIPTION	DENOMINATION	OBSERVACIONES
42	267795F1	1	JUNTA	JOINT	JOINT	
43	181156	1	TORNILLO	BOLT	BOULON	

080104

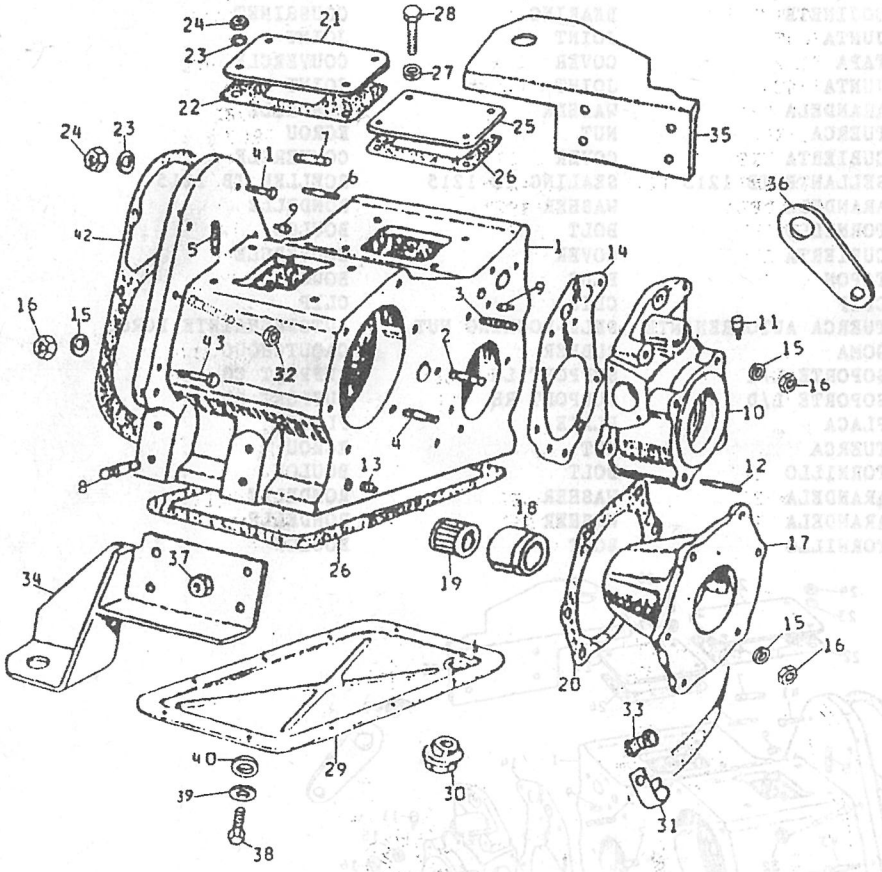

PUBLICACION N:790776 GRUPO=08 CAJA DE TRANSFERE SUBGRUPO=CARTER DE TRANSFEREN
EDICION N: 1 GROUP=08 TRANSFER CASING SUBGROUP=TRANSFER CASING
GROUPE=08 BOITE DE TRANSFER SUBGROUPE=CARTER DE TRANSFER

N.FIG PLATE N.FIG	N.PIEZA PARTNUMBER N.PIECE	CAN QTY OUT	DENOMINACION	DESCRIPTION	DENOMINATION	OBSERVACIONES
1	FRC7108	1	CARTER TRANSFERENCIA	TRANSFER CASING	CARTER DE BOITE TRAN	
2	571134	1	FIJA	DOWEL	TIGE	
3	FRC5594	1	FIJA	DOWEL	TIGE	
4	FRC2482	1	FIJA	DOWEL	TIGE	
5	FRC5595	2	ESPARRAGO	STUD	GOUJON	
6	TE108041	2	ESPARRAGO	STUD	GOUJON	
7	UKC0024	1	TAPON	PLUG	BOUCHON	
8	FRC5419	1	ANILLO	RING	ANNEAU	
9	WL108001	10	ARANDELA	WASHER	RONDELLE	
10	NH108041	2	TUERCA	NUT	ECROU	
11	BH108061	8	TORNILLO	BOLT	BOULON	
12	FRC3412	2	TAPON	PLUG	BOUCHON	
13	FRC5416	1	JUNTA	JOINT	JOINT	
14	FRC5415	1	TAPA	COVER	COUVERCLE	
15	FRC6943	1	ALOJAMIENTO	HOUSING	CARTER	
16	FRC5413	2	JUNTA	JOINT	JOINT	
17	FRC5668	1	TAPA	COVER	COUVERCLE	
18	BH110071	6	TORNILLO	BOLT	BOULON	
19	WL110001	6	ARANDELA	WASHER	RONDELLE	
20	SA108251	2	TORNILLO	BOLT	BOULON	
21	SH108201	1	TORNILLO	BOLT	BOULON	
22	WL108001	1	ARANDELA	WASHER	RONDELLE	
23	FRC5494	1	PLACA	PLATE	PLAQUE	
24	WL110001	6	ARANDELA MUELLE	SPRING WASHER	RONDELLE RESSORT	
25	BH110091	1	TORNILLO	BOLT	BOULON	
26	BH110081	3	TORNILLO	BOLT	BOULON	
27	FRC6152K1	1	CARTER CABLE VELOCI.	SPEEDOMETER CABLE HO	CARTER CABLE COMPUTE	
28	571536	1	ESPARRAGO	STUD	GOUJON	
29	217977	4	ESPARRAGO	STUD	GOUJON	
30	FRC5409	1	JUNTA	JOINT	JOINT	
31	WL110001	6	ARANDELA	WASHER	RONDELLE	
32	SH110301	5	TORNILLO	BOLT	BOULON	
33	BH110091	1	TORNILLO	BOLT	BOULON	
34	NH110041	2	TUERCA	NUT	ECROU	
35	240407	1	CLIP	CLIP	CLIP	
36	06860	1	GOMA	RUBBER	CAOUTCHOUC	
37	127519	1	SOPORTE	SUPPORT	SUPPORT	
38	111263	1	GOMA DE SUSPENSION	SUSPENSION RUBBER	SILENTBLOCK	
39	810503	1	TUERCA	NUT	ECROU	
40	240708	1	PLACA	PLATE	PLAQUE	
41	SH108201	1	TORNILLO	BOLT	BOULON	
42	WL108001	1	ARANDELA	WASHER	RONDELLE	

080109

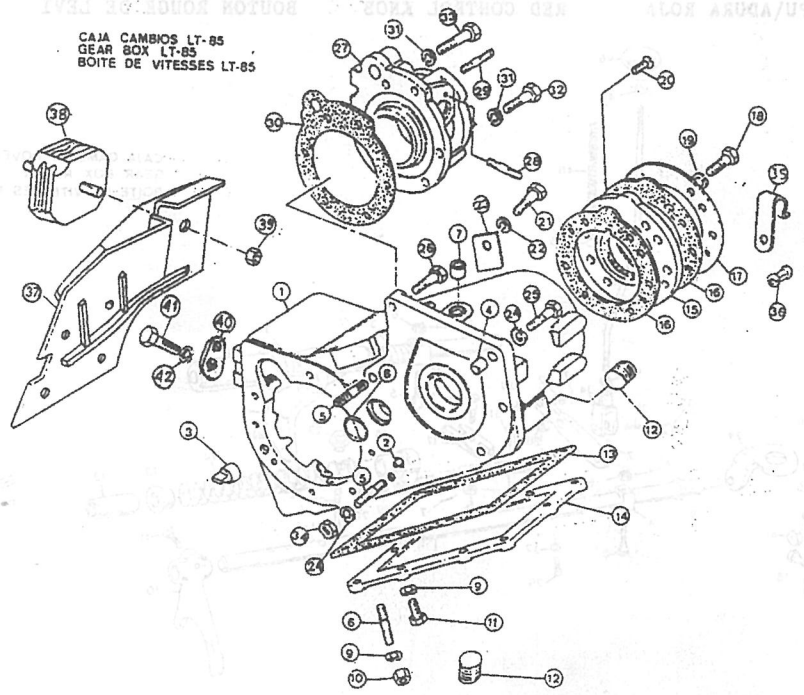

PUBLICACION N:790776 GRUPO=08 CAJA DE TRANSFERE SUBGRUPO=PALANCA Y TIRANTES
EDICION N: 1 GROUP=08 TRANSFER CASING SUBGROUP=SELECTOR SHAFT
GROUPE=08 BOITE DE TRANSFER SUBGROUPE=DISPOSITIF D'ATTAQU

N.FIG PLATE N.FIG	N.PIEZA PARTNUMBER N.PIECE	CAN QTY OUT	DENOMINACION	DESCRIPTION	DENOMINATION	OBSERVACIONES
1	233416	1	EJE SELECTOR	SELECTOR SHAFT	AXE DE SELECTION	
2	622155	1	HORQUILLA	FORK	FOURCHETTE	
3	233449	2	MUELLE	SPRING	RESSORT	
4	233406	2	BLOQUE	BLOCK	BLOC	
5	233409	2	TORNILLO	BOLT	BOULON	
6	181168	3	TUERCA	NUT	ECROU	
7	180307	5	PASADOR	PIN	GOUPILLE	
8	FRC4446	1	EJE	SHAFT	AXE	
9	FRC4534	1	ANILLO	RING	ANNEAU	
10	217584	1	HORQUILLA	FORK	FOURCHETTE	
11	217564	1	TORNILLO	BOLT	BOULON	
12	233438	1	DISTANCIADOR	SPACER	ENTRETOISE	
13	233437	1	CASQUILLO	BUSH	BAGUE	
14	217445	1	MUELLE	SPRING	RESSORT	
15	538536	1	CASQUILLO	BUSH	BAGUE	
16	549168	1	EJE	SHAFT	AXE	
17	233407	1	ACOPLAMIENTO	COUPLING	ACCOUPLEMENT	
18	549169	1	TORNILLO	BOLT	BOULON	
19	054377	1	ARANDELA	WASHER	RONDELLE	
20	180107	1	TUERCA	NUT	ECROU	
21	235416	1	FIADOR	PLUNGER	POUSSOIR	
22	56102	1	MUELLE	SPRING	RESSORT	
23	233441	1	TAPON	PLUG	BOUCHON	
24	238329	1	ESLABON	LINK	MAILLON	
25	021440	1	ARANDELA	WASHER	RONDELLE	
26	180122	1	CONTRATUERCA	LOCK NUT	ECROU DE BLOCAGE	
27	268846	1	PALANCA	LEVER	LEVIER	
28	230086	1	CASQUILLO	BUSH	BAGUE	
29	540842	1	TORNILLO	BOLT	BOULON	
30	232464	1	PASADOR	PIN	GOUPILLE	
31	266992	1	ANILLO	RING	ANNEAU	
32	2876	2	ARANDELA	WASHER	RONDELLE	
33	121490	1	PALANCA SELECTORA	SELECTOR LEVER	LEVIER SELECTION	
34	230090	1	HORQUILLA	FORK	FOURHETTE	
35	230277	1	BULON	BOLT	BOULON	
36	230278	1	MUELLE	SPRING	RESSORT	
37	243714	1	MUELLE	SPRING	RESSORT	
38	219709	1	SOPORTE	SUPPORT	SUPPORT	
39	182125	3	TORNILLO	BOLT	BOULON	
40	WM108001	2	ARANDELA	WASHER	RONDELLE	
41	181185	2	TUERCA	NUT	ECROU	
42	181173	1	TUERCA	NUT	ECROU	
43	127484	1	PALANCA	LEVER	LEVIER	
44	219521	1	EMPU\ADURA ROJA	RED CONTROL KNOB	BOUTON ROUGE DE LEVI	

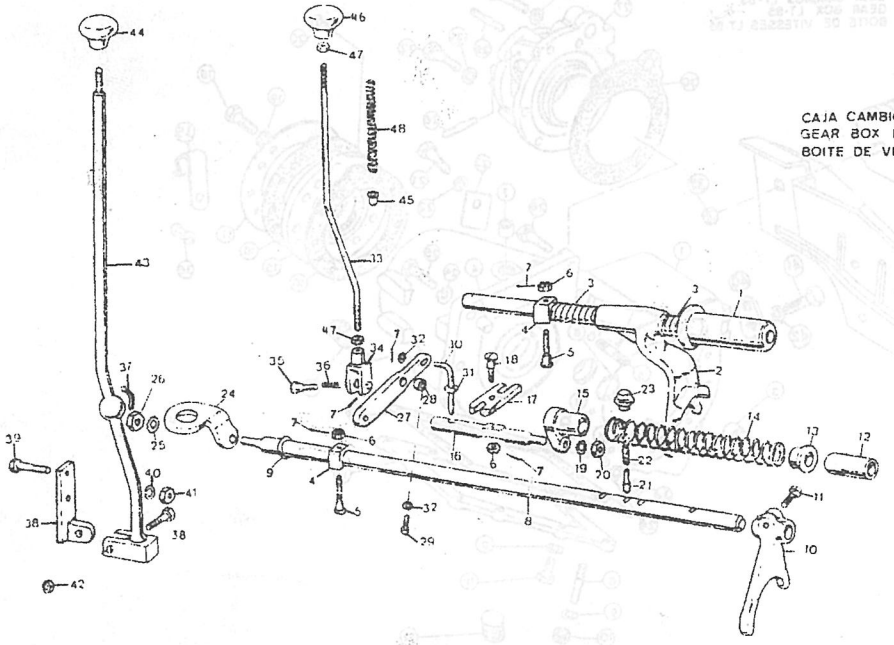

080201

CAJA CAMBIOS ROVER
GEAR BOX ROVER
BOITE DE VITESSES ROVER

PUBLICACION N:790776 GRUPO=08 CAJA DE TRANSFERE SUBGRUPO=PALANCA Y TIRANTES
EDICION N: 1 GROUP=08 TRANSFER CASING SUBGROUP=SELECTOR SHAFT
GROUPE=08 BOITE DE TRANSFER SUBGROUPE=DISPOSITIF D'ATTAQU

N.FIG PLATE N.FIG	N.PIEZA PARTNUMBER N.PIECE	CAN QTY OUT	DENOMINACION	DESCRIPTION	DENOMINATION	OBSERVACIONES
45	234658	1	CASQUILLO	BUSH	BAGUE	
46	121345	1	EMPU\ADURA AMARILLA	YELLOW CONTROL KNOB	BOUTON JAUNE DE LEVI	
47	180105	2	TUERCA	NUT	ECROU	
48	561221	1	MUELLE	SPRING	RESSORT	

080201

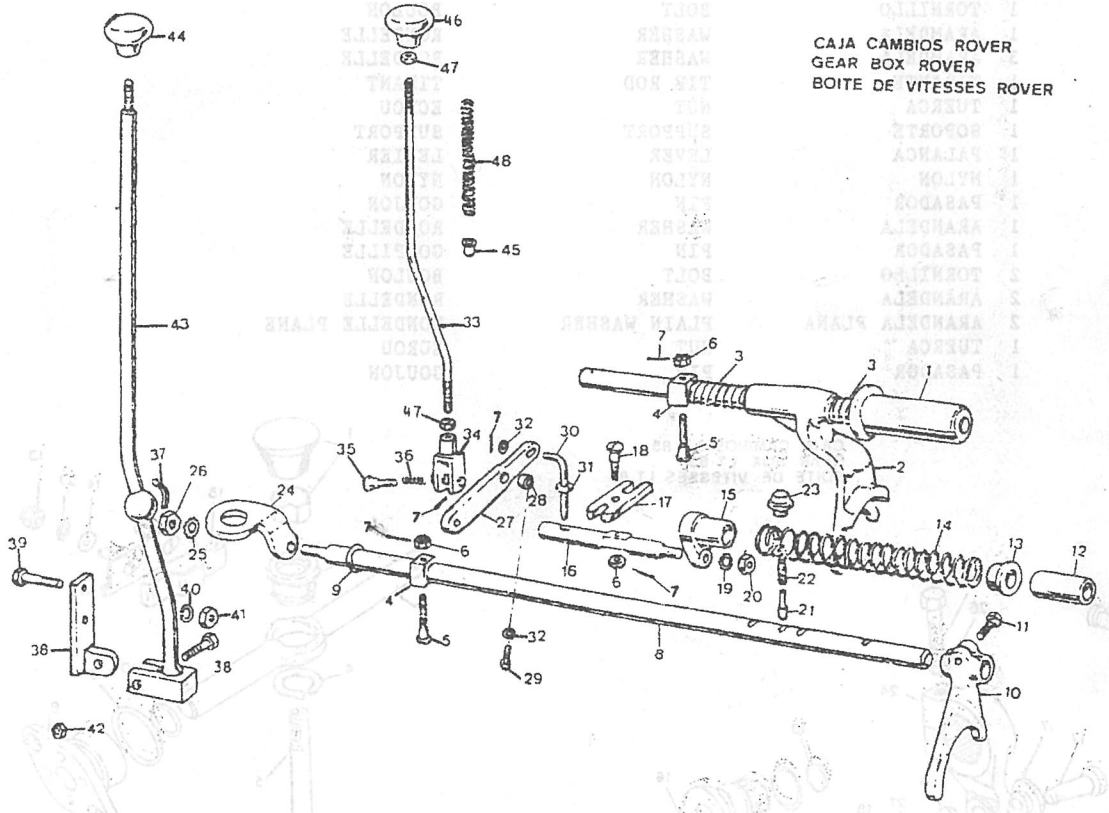

PUBLICACION N:790776 GRUPO=08 CAJA DE TRANSFERE SUBGRUPO=PALANCA Y TIRANTES
EDICION N: 1 GROUP=08 TRANSFER CASING SUBGROUP=SELECTOR SHAFT
GROUPE=08 BOITE DE TRANSFER SUBGROUPE=DISPOSITIF D'ATTAQU

N.FIG PLATE N.FIG	N.PIEZA PARTNUMBER N.PIECE	CAN QTY OUT	DENOMINACION	DESCRIPTION	DENOMINATION	OBSERVACIONES
1	121340	1	EMPU/ADURA	KNOB	BOUTON	
2	FRC5076	1	ALOJAMIENTO	HOUSING	CARTER	
3	FRC6117	1	EJE	SHAFT	AXE	
4	CR120215	1	ARANDELA	WASHER	RONDELLE	
5	FRC6571F1	1	PALANCA	LEVER	LEVIER	
6	42H1112	1	ROTULA	BALL	ROTULE	
7	FRC4499	8	CASQUILLO	BUSH	BAGUE	
8	FRC5574	1	TAPA LATERAL	SIDE COVER	COUVERCLE LATERALE	
9	FRC4565	1	ANILLO	RING	ANNEAU	
10	37610B80042	2	ANILLO	RING	ANNEAU	
11	SF106201	2	TORNILLO	BOLT	BOULON	
12	FRC6125	1	PLACA CON ESPARRA	PLATE WITH STUDS	PLAQUE AVEC GOUJONS	
13	08310-11056	2	TUERCA	NUT	ECROU	
14	189484	2	ARANDELA PLANA	WASHER-PLAIN	RONDELLE PLANE	
15	06395	1	MUELLE	SPRING	RESSORT	
16	FRC5480	1	PALANCA	LEVER	LEVIER	
17	PC108321	3	PASADOR	PIN	GOUJON	
18	PS104121	4	PASADOR	PIN	GOUPILLE	
19	FRC5479	1	ANILLO	RING	ANNEAU	
20	FRC5465	1	PALANCA	LEVER	LEVIER	
21	FRC7018	1	TORNILLO	BOLT	BOULON	
22	FRC5457	1	HORQUILLA	FORK	FOURCHETTE	
23	3073	2	ARANDELA	WASHER	RONDELLE	
24	FRC5478	1	PALANCA	LEVER	LEVIER	
25	BH106051	1	TORNILLO	BOLT	BOULON	
26	WL106001	1	ARAMDELA	WASHER	RONDELLE	
27	WA108051	3	ARANDELA	WASHER	RONDELLE	
28	FRC6053	1	TIRANTE	TIE ROD	TIRANT	
29	NT108041	1	TUERCA	NUT	ECROU	
30	FRC6050	1	SOPORTE	SUPPORT	SUPPORT	
31	FRC6051	1	PALANCA	LEVER	LEVIER	
32	FRC4505	1	NYLON	NYLON	NYLON	
33	PC105401	1	PASADOR	PIN	GOUJON	
34	3816	1	ARANDELA	WASHER	RONDELLE	
35	PS103101	1	PASADOR	PIN	GOUPILLE	
36	SH108251	2	TORNILLO	BOLT	BOULON	
37	WL108001	2	ARANDELA	WASHER	RONDELLE	
38	2266	2	ARANDELA PLANA	PLAIN WASHER	RONDELLE PLANE	
39	252220	1	TUERCA	NUT	ECROU	
40	PC108401	1	PASADOR	PIN	GOUJON	

080210

CAJA CAMBIOS LT-85
GEAR BOX LT-85
BOITE DE VITESSES LT-85

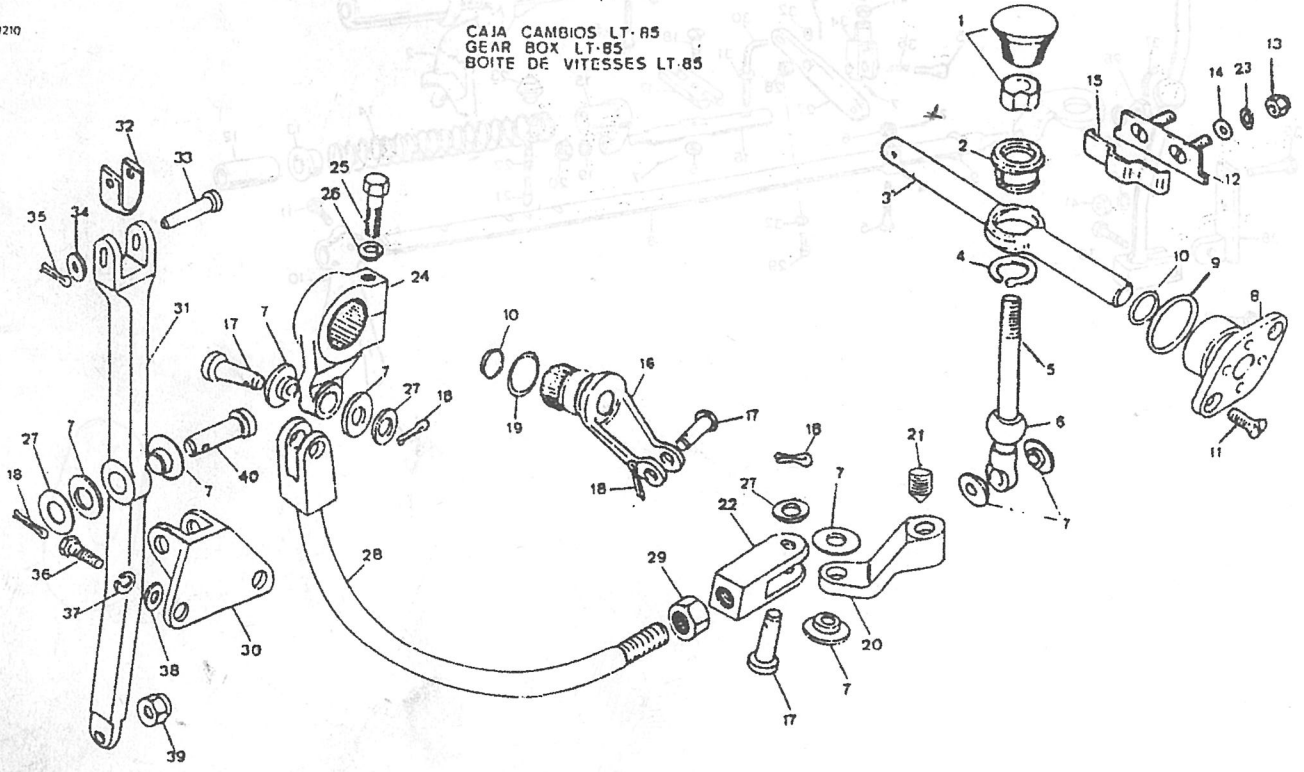

PUBLICACION N:790776 GRUPO=08 CAJA DE TRANSFERE SUBGRUPO=HORQUILLAS
EDICION N: 1 GROUP=08 TRANSFER CASING SUBGROUP=FORKS
GROUPE=08 BOITE DE TRANSFER SUBGROUPE=FOURCHETTE

N.FIG PLATE N.FIG	N.PIEZA PARTNUMBER N.PIECE	CAN QTY OUT	DENOMINACION	DESCRIPTION	DENOMINATION	OBSERVACIONES
1	FRC5461	1	HORQUILLA	FORK	FOURCHETTE	
2	FRC5575	2	ANILLO	RING	ANNEAU	
3	CR120125	1	ANILLO ELASTICO	CIRCLIP	CIRCLIP	
4	FRC7020	1	EJE TRANSVERSAL	TRANSVESURE SHFT	AXE TRANSVERSAL	
5	FRC7018	2	TORNILLO	BOLT	BOULON	
6	FRC5458	1	HORQUILLA	FORK	FOURCHETTE	
7	FRC5459	1	EJE	SHAFT	AXE	
8	FRC7018	2	TORNILLO	BOLT	BOULON	
9	FRC5460	1	BLOQUE SELECTOR	SELECTOR BLOCK	BLOC SELECTIV	
10	FRC6109	1	HORQUILLA	FORK	FOURCHETTE	
11	FRC6030	1	EJE	SHAFT	AXE	
12	FRC6110	1	CASQUILLO	BUSH	BAGUE	
13	FRC5468	1	MUELLE	SPRING	RESSORT	
14	FRC5469	2	CLIP	CLIP	CLIP	
15	FRC6889	1	CONJ.DEDO SELECTOR	SELECTOR FINGER ASSY	ENS DOIGT SELECTION	
16	FRC5652	1	PALANCA	LEVER	LEVIER	
17	NY108041	1	TUERCA	NUT	ECROU	
18	WA108051	1	ARANDELA	WASHER	RONDELLE	
19	FRC6027	1	PALANCA	LEVER	LEVIER	
20	FRC6108	1	ALOJAMIENTO	HOUSING	CARTER	
21	252220	1	TUERCA	NUT	ECROU	
22	FRC5576	1	ANILLO	RING	ANNEAU	
23	FRC7098	1	DEDO	FINGER	DOIGT	
24	SH108251	3	TORNILLO	BOLT	BOULON	
25	WL108001	3	ARANDELA	WASHER	RONDELLE	
26	FRC5473	1	ANILLO	RING	ANNEAU	
27	SU112101	2	TAPON	PLUG	BOUCHON	
28	FRC5562	2	RESORTE	SPRING	RESSORT	
29	571146	2	BOLA	BALL	BILLE	

080211

CAJA CAMBIOS LT-85
GEAR BOX LT-85
BOITE DE VITESSES LT-85

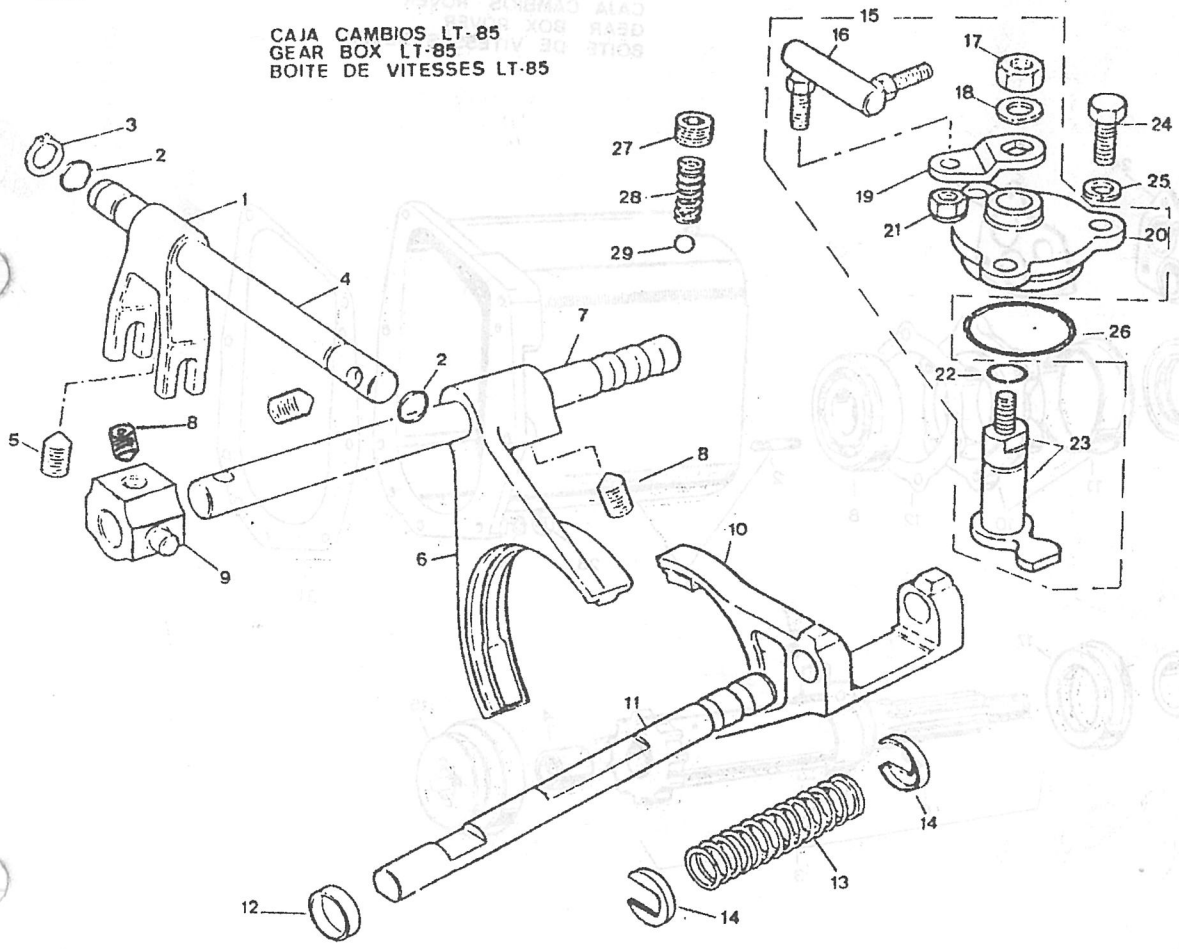

PUBLICACION N:790776 GRUPO=08 CAJA DE TRANSFERE SUBGRUPO=CAJA DEL EJE DE SALI
EDICION N: 1 GROUP=08 TRANSFER CASING SUBGROUP=FRONT OUTPUT SHAFT H
GROUPE=08 BOITE DE TRANSFER SUBGROUPE=CARTER D'ARBRE DE CO

N.FIG PLATE N.FIG	N.PIEZA PARTNUMBER N.PIECE	CAN QTY OUT	DENOMINACION	DESCRIPTION	DENOMINATION	OBSERVACIONES
1	268849	1	CARTER	HOUSING	CARTER	
2	217978	6	ESPARRAGO	STUD	GOUJON	
3	243611	1	CONJ EJE DE SALIDA	FRONT OUTPUT SHAFT	ENSEMBLE D'ARBRE DE	
4	08566	1	CASQUILLO	BUSH	BAGUE	
5	243873	2	DEFLECTOR	OIL THROWER	DEFLECTEUR	
6	237120	2	TORNILLO	BOLT	BOULON	
7	181167	2	TUERCA	NUT	ECROU	
8	217325	1	RODAMIENTO	BEARING	ROULEMENT	
9	FRC1780	1	RETEN	OIL SEAL	ARRETOIR	
10	236541	1	GUARDAPOLVOS	DUST COVER	PARE-POUSSIERE	
11	236548	1	GUARDAPOLVOS	DUST COVER	PARE-POUSSIERE	
12	234525	1	JUNTA	JOINT	JOINT	
13	WM108001	6	ARANDELA	WASHER	RONDELLE	
14	180108	6	TUERCA	NUT	ECROU	
15	233241	1	GARRA	LOCKING DOG	CRABOT	
16	236075	1	BRIDA	GLANGE	GLARQUE	
17	236074	1	GUARDAPOLVOS	MUDSHIELD	PARE-PCUSSIERE	
18	FRC6461	1	ARANDELA	WASHER	RONDELLE	
19	AFU1242	1	TUERCA	NUT	ECROU	
20	180309	1	PASADOR	PIN	GOUPILLE	
21	233448	1	JUNTA	JOINT	JOINT	
22	WM108001	7	ARANDELA	WASHER	RONDELLE	
23	180108	7	TUERCA	NUT	ECROU	
24	266956	1	GUARDAPOLVOS	DUST COVER	PARE-POUSSIERE	
25	120375	1	JUNTA	JOINT	JOINT	
26	3074	3	ARANDELA	WASHER	RONDELLE	
27	215769	3	TORNILLO	BOLT	BOULON	

080307

CAJA CAMBIOS ROVER
GEAR BOX ROVER
BOITE DE VITESSES ROVER

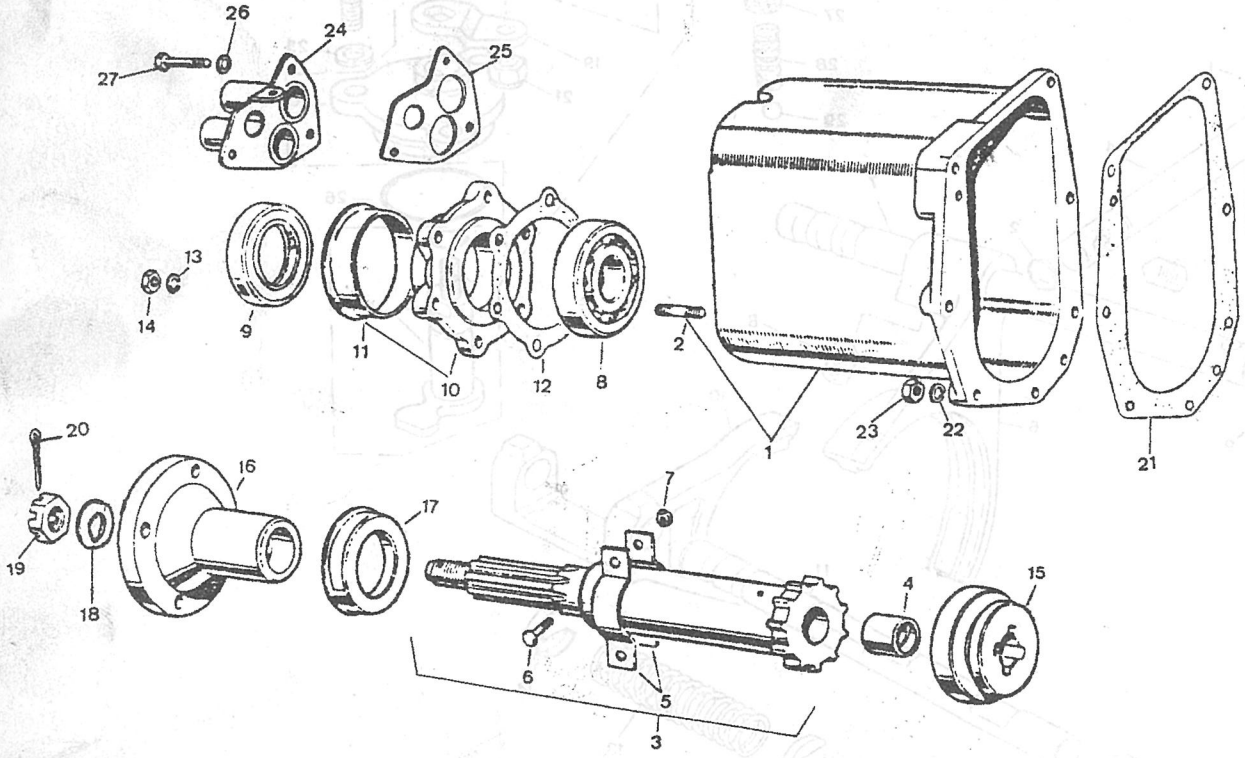

PUBLICACION N:790776 GRUPO=08 CAJA DE TRANSFERE SUBGRUPO=CAJA DEL EJE DE SALI
EDICION N: 1 GROUP=08 TRANSFER CASING SUBGROUP=FRONT OUTPUT SHAFT H
GROUPE=08 BOITE DE TRANSFER SUBGROUPE=CARTER D'ARBRE DE CO

N.FIG PLATE N.FIG	N.PIEZA PARTNUMBER N.PIECE	CAN QTY OUT	DENOMINACION	DESCRIPTION	DENOMINATION	OBSERVACIONES
1	127551	1	CARTER	HOUSING	CARTER	
2	121212	4	ESPARRAGO	STUD	GOUJON	
3	BH108061	7	TORNILLO	BOLT	BOULON	
4	WL108001	21	ARANDELA	WASHER	RONDELLE	
5	FRC6104	1	TAPA	COVER	COUVERCLE	
6	FRC6105	1	JUNTA	JOINT	JOINT	
7	SH108251	7	TORNILLO	BOLT	BOULON	
8	FRC6103	1	JUNTA	JOINT	JOINT	
9	SU112101	1	TORNILLO	BOLT	BOULON	
10	FRC5562	1	RESORTE	SPRING	RESSORT	
11	571146	1	BOLA	BALL	BILLE	
12	BH108181	1	TORNILLO	BOLT	BOULON	
13	FRC6107	1	JUNTA	JOINT	JOINT	
14	FRC6106	1	TAPA	COVER	COUVERCLE	
15	FRC0168	1	TUBERIA	PIPE	TUYAU	
16	595478	1	TORNILLO	BOLT	BOULON	
17	599575	2	ARANDELA	WASHER	RONDELLE	
18	BH108111	6	TORNILLO	BOLT	BOULON	
19	127480	1	RODAMIENTO	BEARING	ROULEMENT	
20	FRC6504	S-N	SUPLEMENTO 2 00 MM	SHIM 2 00 MM	SUPPLEMENT 2 00 MM	
	FRC6505	S-N	SUPLEMENTO 2 05 MM	SHIM 2 05 MM	SUPPLEMENT 2 05 MM	
	FRC6506	S-N	SUPLEMENTO 2 10 MM	SHIM 2 10 MM	SUPPLEMENT 2 10 MM	
	FRC6507	S-N	SUPLEMENTO 2 15 MM	SHIM 2 15 MM	SUPPLEMENT 2 15 MM	
	FRC6508	S-N	SUPLEMENTO 2 20 MM	SHIM 2 20 MM	SUPPLEMENT 2 20 MM	
	FRC6509	S-N	SUPLEMENTO 2 25 MM	SHIM 2 25 MM	SUPPLEMENT 2 25 MM	
	FRC6510	S-N	SUPLEMENTO 2 30 MM	SHIM 2 30 MM	SUPPLEMENT 2 30 MM	
	FRC6511	S-N	SUPLEMENTO 2 35 MM	SHIM 2 35 MM	SUPPLEMENT 2 35 MM	
	FRC6512	S-N	SUPLEMENTO 2 40 MM	SHIM 2 40 MM	SUPPLEMENT 2 40 MM	
	FRC6513	S-N	SUPLEMENTO 2 45 MM	SHIM 2 45 MM	SUPPLEMENT 2 45 MM	
	FRC6514	S-N	SUPLEMENTO 2 50 MM	SHIM 2 50 MM	SUPPLEMENT 2 50 MM	
	FRC6515	S-N	SUPLEMENTO 2 55 MM	SHIM 2 55 MM	SUPPLEMENT 2 55 MM	
	FRC6516	S-N	SUPLEMENTO 2 60 MM	SHIM 2 60 MM	SUPPLEMENT 2 60 MM	
	FRC6517	S-N	SUPLEMENTO 2 65 MM	SHIM 2 65 MM	SUPPLEMENT 2 65 MM	
	FRC6518	S-N	SUPLEMENTO 2 70 MM	SHIM 2 70 MM	SUPPLEMENT 2 70 MM	
	FRC6519	S-N	SUPLEMENTO 2 75 MM	SHIM 2 75 MM	SUPPLEMENT 2 75 MM	
	FRC6520	S-N	SUPLEMENTO 2 80 MM	SHIM 2 80 MM	SUPPLEMENT 2 80 MM	
	FRC6521	S-N	SUPLEMENTO 2 85 MM	SHIM 2 85 MM	SUPPLEMENT 2 85 MM	
	FRC6522	S-N	SUPLEMENTO 2 90 MM	SHIM 2 90 MM	SUPPLEMENT 2 90 MM	
	FRC6523	S-N	SUPLEMENTO 2 95 MM	SHIM 2 95 MM	SUPPLEMENT 2 95 MM	
	FRC6524	S-N	SUPLEMENTO 3 00 MM	SHIM 3 00 MM	SUPPLEMENT 3 00 MM	
	FRC6525	S-N	SUPLEMENTO 3 05 MM	SHIM 3 05 MM	SUPPLEMENT 3 05 MM	
	FRC6526	S-N	SUPLEMENTO 3 10 MM	SHIM 3 10 MM	SUPPLEMENT 3 10 MM	
	FRC6527	S-N	SUPLEMENTO 3 15 MM	SHIM 3 15 MM	SUPPLEMENT 3 15 MM	
	FRC6528	S-N	SUPLEMENTO 3 20 MM	SHIM 3 20 MM	SUPPLEMENT 3 20 MM	

080315

CAJA CAMBIOS LT-85
GEAR BOX LT-85
BOITE DE VITESSES LT-85

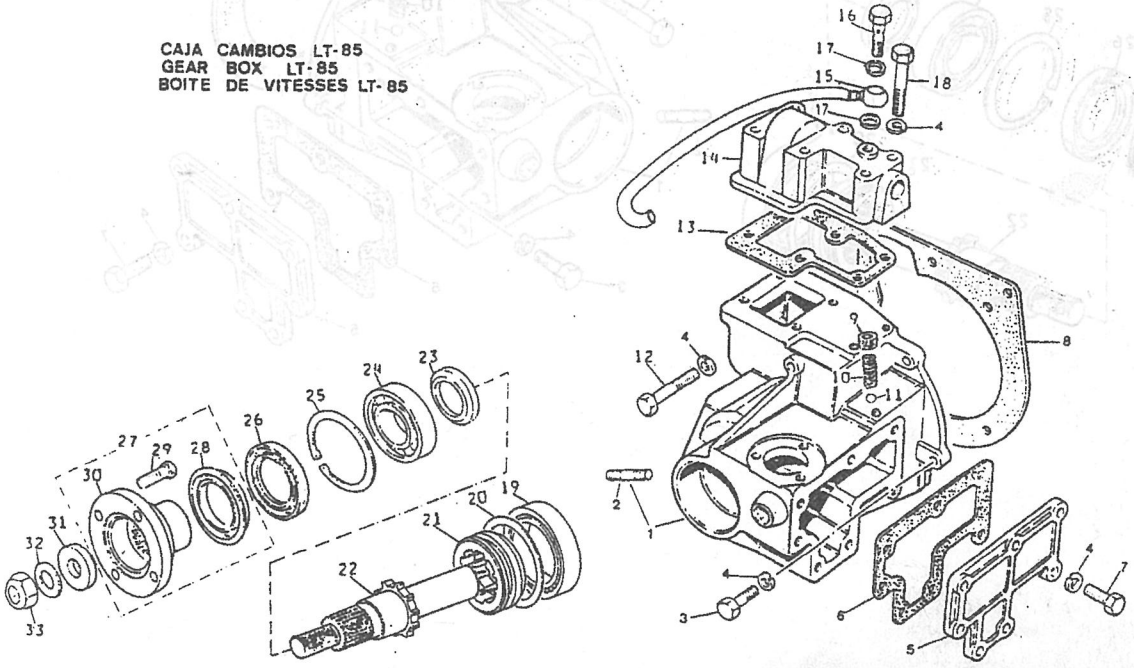

PUBLICACION N:790776 GRUPO=08 CAJA DE TRANSFERE SUBGRUPO=CAJA DEL EJE DE SALI
EDICION N: 1 GROUP=08 TRANSFER CASING SUBGROUP=FRONT OUTPUT SHAFT H
GROUPE=08 BOITE DE TRANSFER SUBGROUPE=CARTER D'ARBRE DE CO

N.FIG PLATE N.FIG	N.PIEZA PARTNUMBER N.PIECE	CAN QTY OUT	DENOMINACION	DESCRIPTION	DENOMINATION	OBSERVACIONES
	FRC6529	S-N	SUPLEMENTO 3 25 MM	SHIM 3 25 MM	SUPPLEMENT 3 25 MM	
21	121337	1	GARRA	LUCKING DOG	GRABOT	
22	121336	1	EJE	SHAFT	AXE	
23	121335	1	SEPARADOR	SPACER	ENTRETOISE	
24	214797	1	RODAMIENTO	BEARING	ROULEMENT	
25	216962	1	ANILLO ELASTICO	CIRCLIP	CIRCLIP	
26	FRC7043	1	RETEN	OIL SEAL	ARRETOIR	
27	FRC5441	1	BRIDA DELANTERA	FRONT FLANGE	FLARQUE AVANT	
28	FRC6121	1	GUARDAPOLVOS	DUST COVER	PARE POUSSIERE	
29	184249	1	TORNILLO	BOLT	BOULON	
30	FRC5442	1	BRIDA	FLANGE	FLARQUE	
31	571468	1	ARANDELA	WASHER	RONDELLE	
32	FRC2464	1	ARANDELA	WASHER	RONDELLE	
33	NY120041	1	TUERCA	NUT	ECROU	

080315

CAJA CAMBIOS LT-85
GEAR BOX LT-85
BOITE DE VITESSES LT-85

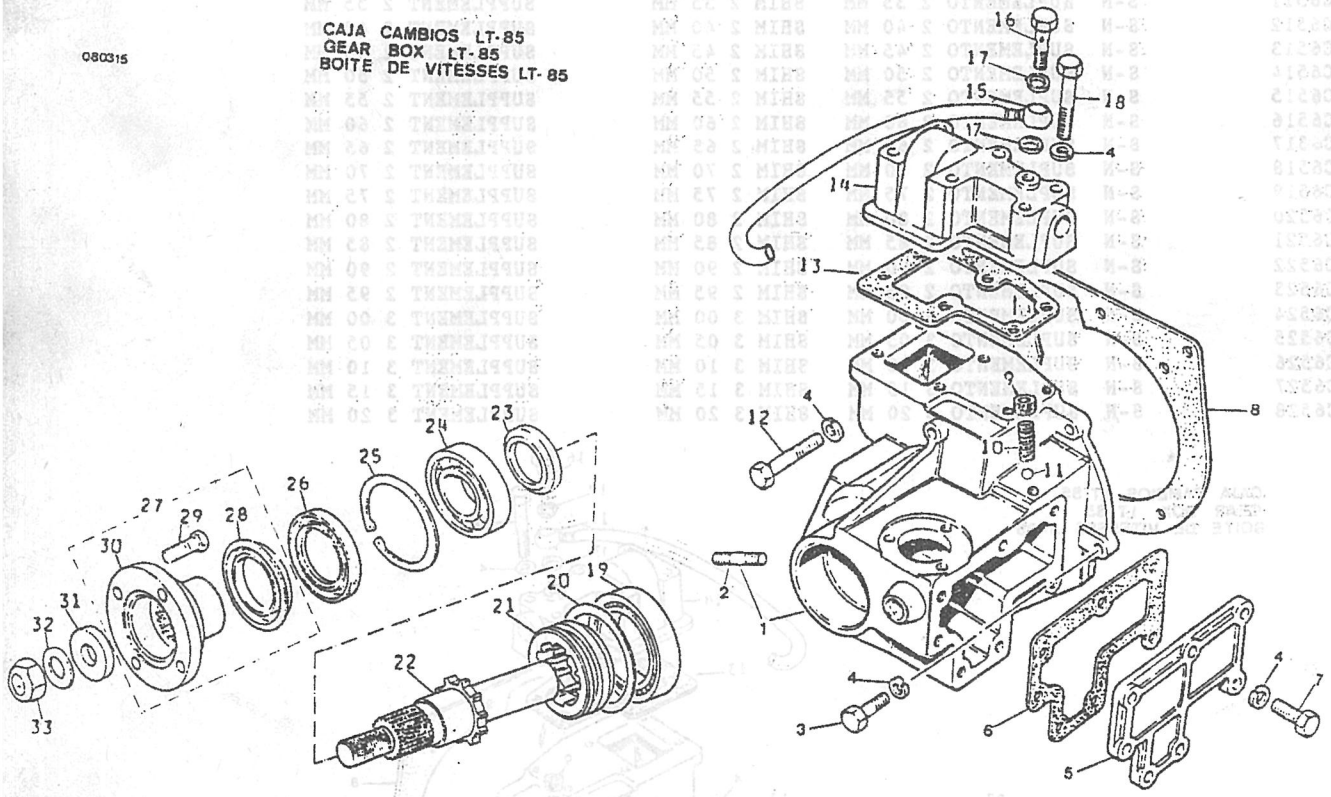

GRUPO 09 09 EJES DE RUEDA

GROUP 09 09 AXLES AND PROPELL

GROUP 09 09 PONTS ET ARBRE TR

COMPOSICION.....COMPOSITION.....COMPOSICION

REFERENCIA PARTNUMBER NUM.PIECE	DENOMINACION	DESCRIPTION	DENOMINATION
0901324	EJE DELANTERO	FRONT AXLE	PONT AVANT
090306	JUNTAS UNIVERSALES	UNIVERSAL JOINT	CARDAN ET MOYEUX
0903061	JUNTAS UNIVERSALES	UNIVERSAL JOINT	CARDAN ET MOYEUX
090308	JUNTAS UNIVERSALES	UNIVERSAL JOINT	CARDAN ET MOYEUX
090404	EJE TRASERO	BEAR AXLE	PONT ARRIERE
090405	EJE TRASERO	REAR AXLE	PONT ARRIERE
090507	DIFERENCIAL	DIFERENTIAL	DIFFERENTIEL
090508	DIFERENCIAL DELANTER	FRONT DIFERENTIAL	DIFFERENTIEL AVANT
090521	DIFERENCIAL TRASERO	REAR DIFERENTIAL	DIFFERENTIEL ARRIERE
090615	RUEDAS	WHEELS	ROUES

GRUPO 09 09 EJES,DS RUEDA

GROUP 09 09 AXLES AND WHEELS

GROUP 09 09 PONTS ET ARBRE.TR

COMPOSICION.....COMPOSITION.....COMPOSICION

REFERENCIA PARTNUMBER NUM.PIECE	DENOMINACION	DESCRIPTION	DENOMINATION
0901324	EJE DELANTERO	FRONT AXLE	PONT AVANT
0903068	JUNTAS UNIVERSALES	UNIVERSAL JOINT	CARDAN ET MOYEUX
0903061	JUNTAS UNIVERSALES	UNIVERSAL JOINT	CARDAN ET MOYEUX
0903068	JUNTAS UNIVERSALES	UNIVERSAL JOINT	CARDAN ET MOYEUX
0904064	EJE TRASERO	REAR AXLE	PONT ARRIERE
0904065	EJE TRASERO	REAR AXLE	PONT ARRIERE
0905027	DIFERENCIAL	DIFFERENTIAL	DIFFERENTIEL
0905069	DIFERENCIAL DELANTER	FRONT DIFFERENTIAL	DIFFERENTIEL AVANT
0905321	DIFERENCIAL TRASERO	REAR DIFFERENTIAL	DIFFERENTIEL ARRIERE
0906015	RUEDAS	WHEELS	ROUES

PUBLICACION N:790776 GRUPO=09 EJES DE RUEDA SUBGRUPO=EJE DELANTERO
EDICION N: 1 GROUP=09 AXLES AND PROPELL SUBGROUP=FRONT AXLE
GROUPE=09 PONTS ET ARBRE TR SUBGROUPE=PONT AVANT

N.FIG PLATE N.FIG	N.PIEZA PARTNUMBER N.PIECE	CAN QTY OUT	DENOMINACION	DESCRIPTION	DENOMINATION	OBSERVACIONES
1	137799	1	EJE DELANTERO	FRONT AXLE	PONT AVANT	2'5B DC D.MECANIC
2	137777	1	EJE DELANTERO	FRONT AXLE	PONT AVANT	2'5B DL-2'5ESP.D.ME
3	137824	1	EJE DELANTERO	FRONT AXLE	PONT AVANT	2'5B DC D.HIDRAUL.
4	137787	1	EJE DELANTERO	FRONT AXLE	PONT AVANT	2500DC
5	137789	1	EJE DELANTERO	FRONT AXLE	PONT AVANT	2500L
6	137825	1	EJE DELANTERO	FRONT AXLE	PONT AVANT	2'5B DL-2'5ESP.D.HI.
7	FRC3366	1	CARTER EJE DELANTERO	FRONT AXLE CASING	CARTER DE PONT AVANT	2'5 C-2'5 L-2'5 E
8	137754	1	CARTER EJE DELANTERO	FRONT AXLE CASING	CARTER DE PONT AVANT	2500 DL-2500 DC
9	561196	6	ESPARRAGO 44.50 MM	STUD 44.50 MM	GOUJON 44.50 MM	
10	561195	4	ESPARRAGO 35.50 MM	STUD 35.50 MM	GOUJON 35.50 MM	
11	137779	1	CONJ.DIFERENCI 43:11	DIFERENTIAL AS 43:11	ENS DE DIFFERE 43:11	2'5B DC-2500 C
12	FRC5696F1	1	CONJ.DIFERENCI 47:10	DIFERENTIAL AS 47:10	ENS DE DIFFERE 47:10	2'5L-2'5ESP.2500
13	181170	10	TUERCA DIFERENCIAL	DIFERENTIAL NUT	ECROU DE DIFFERENTIA	
14	07316	1	JUNTA DE DIFERNCIAL	DIFERENTIAL JOINT	JOINT DE DIFFERENTIA	
15	FRC3412	2	TAPON	PLUG	BOUCHON	
16	164753	1	SOPTE BARRA ESTAB.LD	PANHARD ROD SUPPO.RH	SUPPORT BARRE STA CD	2500 L-2500 C
	164754	1	SOPTE.BARRA ESTAB.LI	PANHARD ROD SUPPO LH	SUPPORT BARRE STA CG	2500 L-2500 C
17	553000	1	ARBOL DE TRANSMI.DEL	PROPELLER SHAFT	ARBRE DE TRANSMISSIO	2'5L-2'5C-2'5ESPE
18	121204	1	ARBOL DE TRANSMI.DEL	PROPELLER SHAFT	ARBRE DE TRANSMISSIO	2500 L-2500 C
19	600655	1	CUERPO ESTRIADO	CHAMFERED MEMBER	CORPS STRIE	
20	193735	1	JUNTA DE ESTANQUEIDA	SEALING WASHER	JOINT D'ETANCHEITE	
21	193736	1	CAZOLETA DE CIERRE	LOCK CUP	CURETTE DE FERMETURE	
22	549299	2	ENGRASADOR	GREASER	GRAISSEUR	
23	110414	2	ENGRASADOR	GREASER	GRAISSEUR	
24	242522E1	8	CIRCLIP	CIRCLIP	CIRCLIP	
25	541858	2	CRUCETA	JOURNAL	CROISILLON	
26	600656	2	BRIDA	FLANGE	BRIDE	
27	181170	4	TUERCA	NUT	ECROU	
28	509045	4	TORNILLO	BOLT	BOULON	
29	512701	4	TORNILLO	BOLT	BOULON	
30	509751	4	TUERCA	NUT	ECROU	
31	595396	1	TUBO	PIPE	TUYAU	PARA DIREC.HIDRAU.
32	312856	1	ARANDELA DE GOMA	RUBBER WASHER	RONDELLE CAOUTCHOUC	
33	595396F1	1	TUBO	PIPE	TUYAU	PARA DIREC.MECANI.
34	595478	1	TORNILLO RACORD	RACORD BOLT	BOULON RACORD	
35	189501	2	ARANDELA	WASHER	RONDELLE	

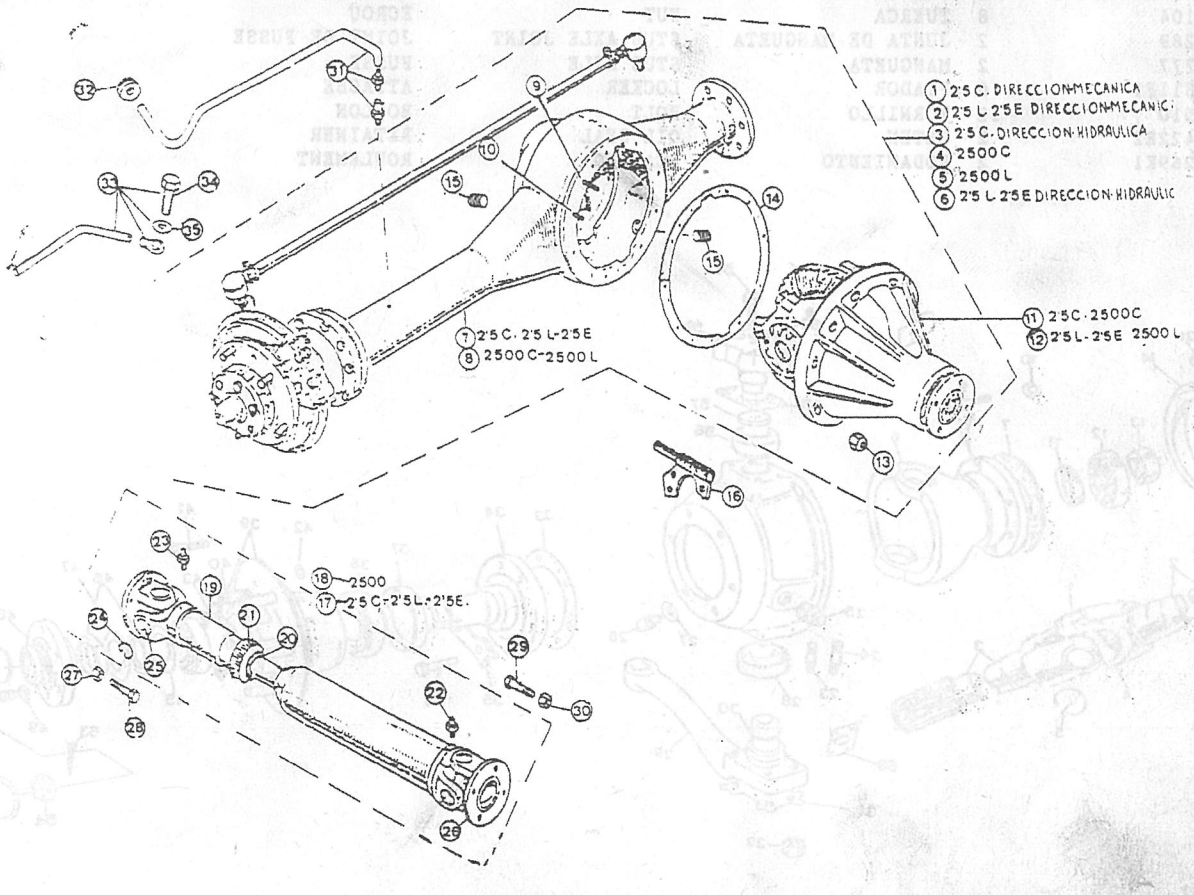

PUBLICACION N:790776 GRUPO=09 EJES DE RUEDA SUBGRUPO=JUNTAS UNIVERSALES (DIRECCION MECANICA)
EDICION N: 1 GROUP=09 AXLES AND PROPELL SUBGROUP=UNIVERSAL JOINT
GROUPE=09 PONTS ET ARBRE TR SUBGROUPE=CARDAN ET MOYEUX

N.FIG PLATE N.FIG	N.PIEZA PARTNUMBER N.PIECE	CAN QTY OUT	DENOMINACION	DESCRIPTION	DENOMINATION	OBSERVACIONES
1	269265	1	CONJ.SEMIEJE L/D	HALF SHAFT ASSY RH	ENS ARBRE DE ROVE CD	
	269266	1	CONJ.SEMIEJE L/I	HALF SHAFT ASSY LH	ENS ARBRE DE ROVE CG	
2	276719	1	SEMIEJE L/D	HALF SHAFT RH	ARBRE DE ROVE CD	
	276720	1	SEMIEJE L/I	HALF SHAFT LH	ARBRE DE ROVE CG	
3	242520E1	2	SEMIEJE EXTERIOR	STUB SHAFT	ARBRE EXTERIEUR	
4	242521E1	2	CRUCETA	JOURNAL	CROISILLON	
5	242522E1	8	ANILLO ELASTICO	CIRCLIP	CIRCLIP	
6	591606	2	ALOJAMIENTO	HOUSING SWINEL	LOGEMENT DE PIVOT	
7	232413	2	JUNTA	JOINT	JOINT	
8	508175	2	PLACA TOPE	STOP PLATE	PLAQUE DE PARECHOC	
9	576510	10	TORNILLO	BOLT	BOULON	
	576522	2	TORNILLO	BOLT	BOULON	
10	181165	12	TUERCA	NUT	ECROU	
11	244151	2	SEPARADOR	SPACER	ENTRETOISE	
12	244150	2	RODAMIENTO	BEARING	ROULEMENT	
13	217398	2	CASQUILLO	BUSH	BAGUE	
14	502406	2	RETEN	OIL SEAL	RETAINER	
15	235968	2	PLACA FIJADORA RETEN	RETAINING PLATE	FIXATION DE JOINT DE	
16	217400	2	RETEN CARTER EJE	SHAFT CASING OIL SEA	RETAINER	
17	181159	2	TORNILLO	BOLT	BOULON	
18	181158	2	TORNILLO	BOLT	BOULON	
	183138	8	TORNILLO	BOLT	BOULON	
19	3074	10	ARANDELA MUELLE	SPRING WASHER	RONDELLE RESSORT	
20	3467	10	ARANDELA	WASHER	RONDELLE	
21	3819	2	TUERCA	NUT	ECROU	
22	130701	1	CARTER DE EJES L/D	SWIVEL PIN HOUSIN RH	BOITER DE PIVOT CD	
	130702	1	CARTER DE EJES L/I	SWIVEL PIN HOUSIN LH	BOITER DE PIVOT CG	
23	531494	4	ESPARRAGO	STUD	GOUJON	
24	531043	4	ESPARRAGO	STUD	GOUJON	
25	3292	2	TAPON	PLUG	BOUCHON	
26	236070	2	TAPON	PLUG	BOUCHON	
27	230511	2	ARANDELA JUNTA	JOINT WASHER	RONDELLE JOINT	
28	217268	2	RODAMIENTO	BEARING	ROULEMENT	
29	FRC2082F1	1	EJE DE GIRO L/D	SWIVEL PIN RH	BIELLE PENDANTE CD	
	FRC2083F1	1	EJE DE GIRO L/I	SWIVEL PIN LH	BIELLE PENDANTE CG	
30	531433	2	ANILLO	RING	ANNEAU	
31	FRC3582	2	FIADOR	LOCKER	ATTACHE	
32	594104	8	TUERCA	NUT	ECROU	
33	277289	2	JUNTA DE MANGUETA	STUB AXLE JOINT	JOINT DE FUSSE	
34	130777	2	MANGUETA	STUB AXLE	FUSSE	
35	277311F1	6	FIADOR	LOCKER	ATTACHE	
36	576510	12	TORNILLO	BOLT	BOULON	
37	239422E2	2	RETEN	OIL SEAL	RETAINER	
38	217269K1	2	RODAMIENTO	BEARING	ROULEMENT	

090306

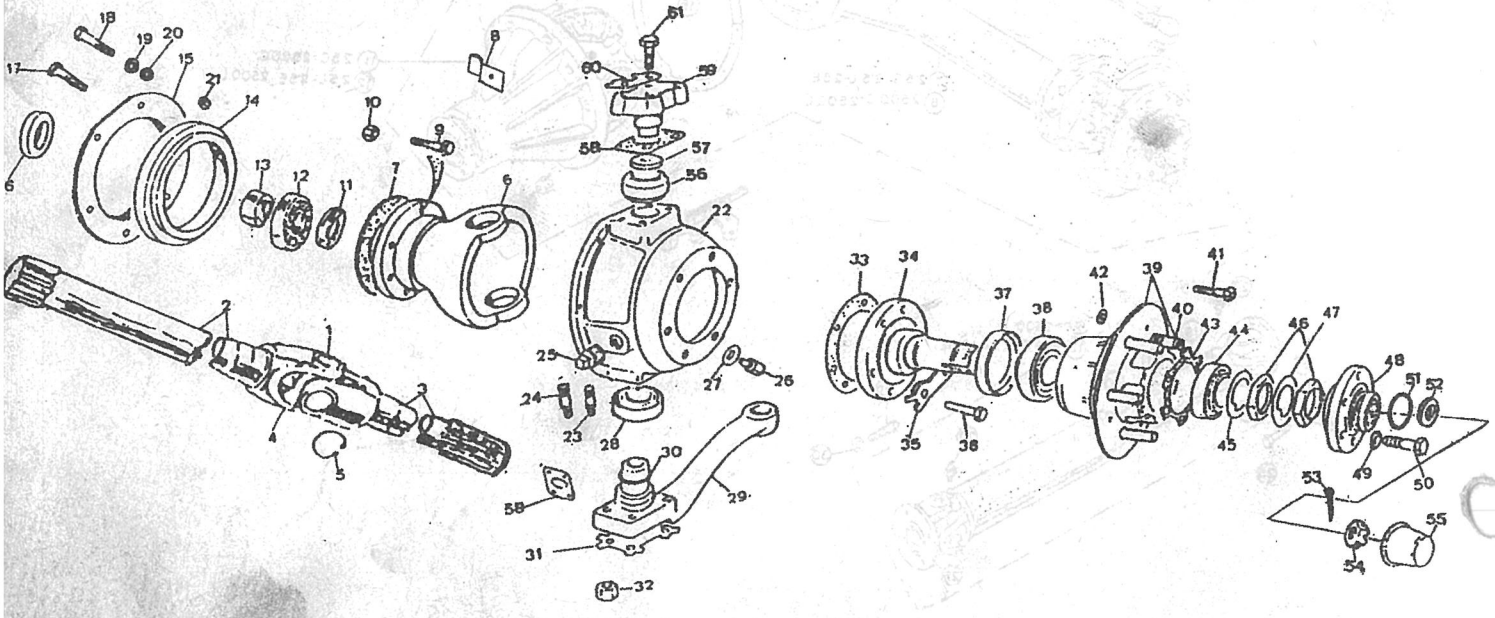

PUBLICACION N:790776 GRUPO=09 EJES DE RUEDA SUBGRUPO=JUNTAS UNIVERSALES (DIRECCION MECANICA)
EDICION N: 1 GROUP=09 AXLES AND PROPELL SUBGROUP=UNIVERSAL JOINT
GROUPE=09 PONTS ET ARBRE TR SUBGROUPE=CARDAN ET MOYEUX

N.FIG PLATE N.FIG	N.PIEZA PARTNUMBER N.PIECE	CAN QTY OUT	DENOMINACION	DESCRIPTION	DENOMINATION	OBSERVACIONES
39	137744	2	BUJE DELANTERO	FRONT NUB	MOYEU AVANT	
40	576825	10	ESPARRAGO	STUD	GOUJON	
41	184279	12	TORNILLO BUJE	HUB BOLT	BOULON DE MOYEU	
42	810003	12	ARANDELA MUELLE	SPRING WASHER	RONDELLE RESSORT	
43	231505	2	JUNTA DE BRIDA	HUB DRIVING JOINT	JOINT DE ELEMENT D'E	
44	217270	2	RODAMIENTO	BEARING	ROULEMENT	
45	217352	2	ARANDELA CHAVETA	KEY WASHER	RONDELLE CLAVETTE	
46	217355K1	4	TUERCA DE MANGUETA	STUB AXLE NUT	ECROU DE MOYEU	
47	217353	2	ARANDELA FRENO	LOCKER	PIECE FREIN	
48	571235E1	2	BRIDA DE ARRASTRE	HUB DRIVING MEMBER	ELEMENT D'ENTRAINEME	
49	180426	12	ARANDELA MUELLE	SPRING WASHER	RONDELLE RESSORT	
50	180183	12	TORNILLO	BOLT	BOULON	
51	553263	2	JUNTA TORICA	RING JOINT	JOINT D'ETANCHEITE	
52	3300	2	ARANDELA PLANA	PLAIN WASHER	RONDELLE PLANE	
53	180309	2	PASADOR	PIN	GOUPILLE	
54	AFU1242	2	TUERCA	NUT	ECROU	
55	219098	2	TAPACUBOS	HUB CAP	COURE MOYEU	
56	539742	2	ALOJAMIENTO Y CASQUI	HOUSING AND BUSH	LOGEMENT ET BAGUE	
57	FRC8249	2	ARANDELA PRESION	THRUST WASHER	RONDELLE DE BUTEE	
58	FRC3578	S-N	SUPLEMENTO 0'10 MM	SHIM 0'10 MM	SUPPLEMENT 0'10 MM	
	FRC3579	S-N	SUPLEMENTO 0'15 MM	SHIM 0'15 MM	SUPPLEMENT 0'15 MM	
	FRC3580	S-N	SUPLEMENTO 0'20 MM	SHIM 0'20 MM	SUPPLEMENT 0'20 MM	
	FRC3581	S-N	SUPLEMENTO 0'80 MM	SHIM 0'80 MM	SUPPLEMENT 0'80 MM	
59	576583	2	EJE DE GIRO	SWIVEL PIN UPPER	PIVOT SUPERLIEUR	
60	531001	4	FIADOR	LOCKER	ATTACHE	
61	188149	8	TORNILLO	BOLT	BOULON	

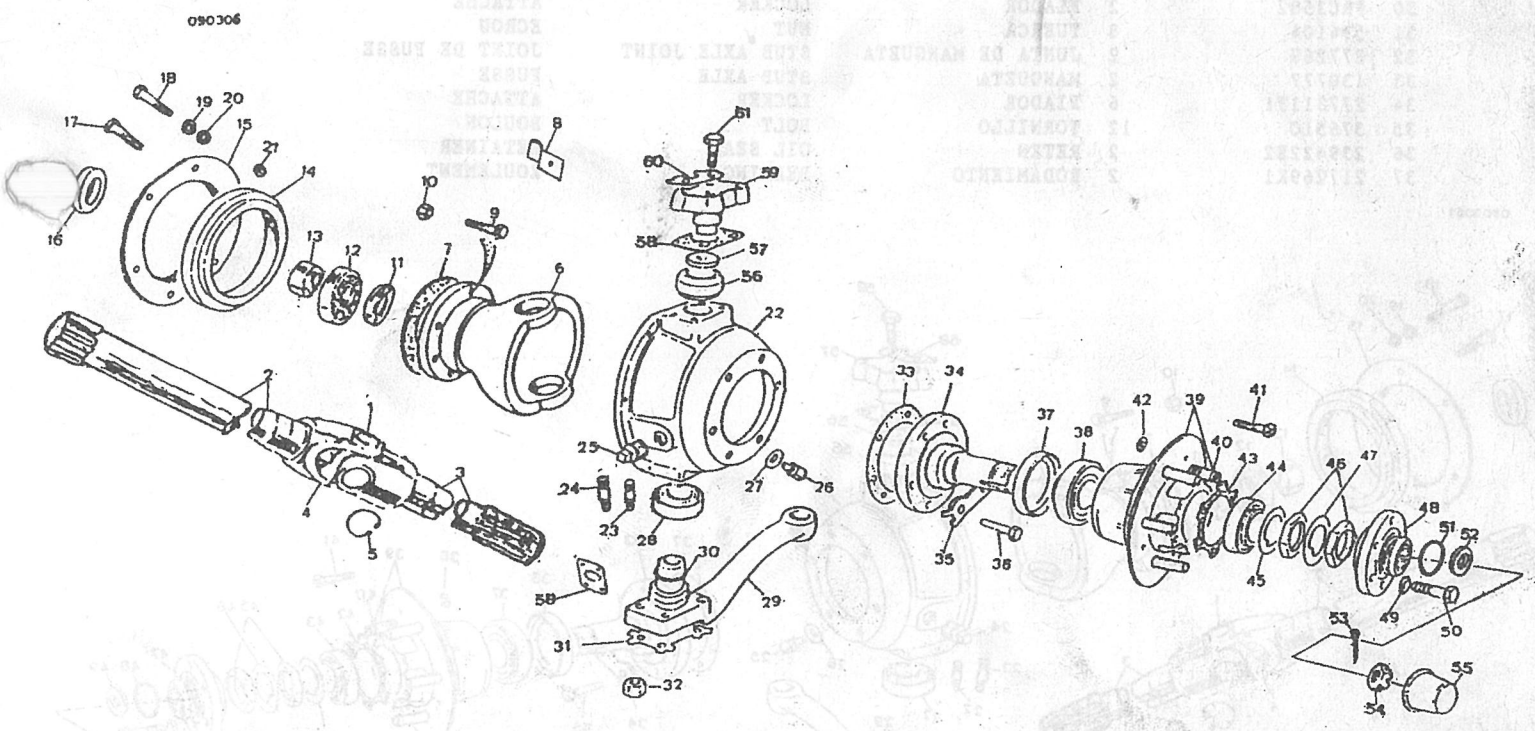

PUBLICACION N:790776 GRUPO=09 EJES DE RUEDA SUBGRUPO=JUNTAS UNIVERSALES
EDICION N: 1 GROUP=09 AXLES AND PROPELL SUBGROUP=UNIVERSAL JOINT
GROUPE=09 PONTS ET ARBRE TR SUBGROUPE=CARDAN ET MOYEUX

N.FIG PLATE N.FIG	N.PIEZA PARTNUMBER N.PIECE	CAN QTY OUT	DENOMINACION	DESCRIPTION	DENOMINATION	OBSERVACIONES
1	269265	1	CONJ.SEMIEJE L/D	HALF SHAFT ASSY RH	ENS ARBRE DE ROVE CD	
	269266	1	CONJ.SEMIEJE L/I	HALF SHAFT ASSY LH	ENS ARBRE DE ROVE CG	
2	276719	1	SEMIEJE L/D	HALF SHAFT RH	ARBRE DE ROVE CD	
	276720	1	SEMIEJE L/I	HALF SHAFT LH	ARBRE DE ROVE CG	
3	242520E1	2	SEMIEJE EXTERIOR	STUB SHAFT	ARBRE EXTERIEUR	
4	242521E1	2	CRUCETA	JOURNAL	CROISILLON	
5	242522E1	8	ANILLO ELASTICO	CIRCLIP	CIRCLIP	
6	591606	2	ALOJAMIENTO	HOUSING SWIVEL	LOGEMENT DE PIVOT	
7	232413	2	JUNTA	JOINT	JOINT	
8	FRC3578	S-N	SUPLEMENTO 0'10 MM	SHIM 0'10 MM	SUPPLEMENT 0'10 MM	
	FRC3579	S-N	SUPLEMENTO 0'15 MM	SHIM 0'15 MM	SUPPLEMENT 0'15 MM	
	FRC3580	S-N	SUPLEMENTO 0'20 MM	SHIM 0'20 MM	SUPPLEMENT 0'20 MM	
	FRC3581	S-N	SUPLEMENTO 0'80 MM	SHIM 0'80 MM	SUPPLEMENT 0'80 MM	
9	576510	12	TORNILLO	BOLT	BOULON	
10	181165	12	TUERCA	NUT	ECROU	
11	244151	2	SEPARADOR	SPACER	ENTRETOISE	
12	244150	2	RODAMIENTO	BEARING	ROULEMENT	
13	217398	2	CASQUILLO	BUSH	BAGUE	
14	502406	2	RETEN	OIL SEAL	RETAINER	
15	235968	2	PLACA FIJADORA RETEN	RETAINING PLATE	FIXATION DE JOINT DE	
16	217400	2	RETEN CARTER EJE	SHAFT CASING OIL SEA	RETAINER	
17	183138	10	TORNILLO	BOLT	BOULON	
18	181158	2	TORNILLO	BOLT	BOULON	
19	3074	12	ARANDELA MUELLE	SPRING WASHER	RONDELLE RESSORT	
20	3467	12	ARANDELA	WASHER	RONDELLE	
21	130701	1	CARTER DE EJES L/D	SWIVEL PIN HOUSING R	BOITER DE PIVOT CD	
	130702	1	CARTER DE EJES L/I	SWIVEL PIN HOUSIN LH	BOITER DE PIVOT CG	
22	531494	4	ESPARRAGO	STUD	GOUJON	
23	531043	4	ESPARRAGO	STUD	GOUJON	
24	3292	2	TAPON	PLUG	BOUCHON	
25	236070	2	TAPON	PLUG	BOUCHON	
26	230511	2	ARANDELA JUNTA	JOINT WASHER	RONDELLE JOINT	
27	217268	2	RODAMIENTO	BEARING	ROULEMENT	
28	FRC2082F1	1	EJE DE GIRO L/D	SWIVEL PIN RH	BIELLE PENDANTE CD	
	FRC2083F1	1	EJE DE GIRO L/I	SWIVEL PIN LH	BIELLE PENDANTE CG	
29	531433	2	ANILLO	RING	ANNEAU	
30	FRC3582	2	FIADOR	LOCKER	ATTACHE	
31	594104	8	TUERCA	NUT	ECROU	
32	277289	2	JUNTA DE MANGUETA	STUB AXLE JOINT	JOINT DE FUSSE	
33	130777	2	MANGUETA	STUB AXLE	FUSSE	
34	277311F1	6	FIADOR	LOCKER	ATTACHE	
35	576510	12	TORNILLO	BOLT	BOULON	
36	239422E2	2	RETEN	OIL SEAL	RETAINER	
37	217269K1	2	RODAMIENTO	BEARING	ROULEMENT	

0903061

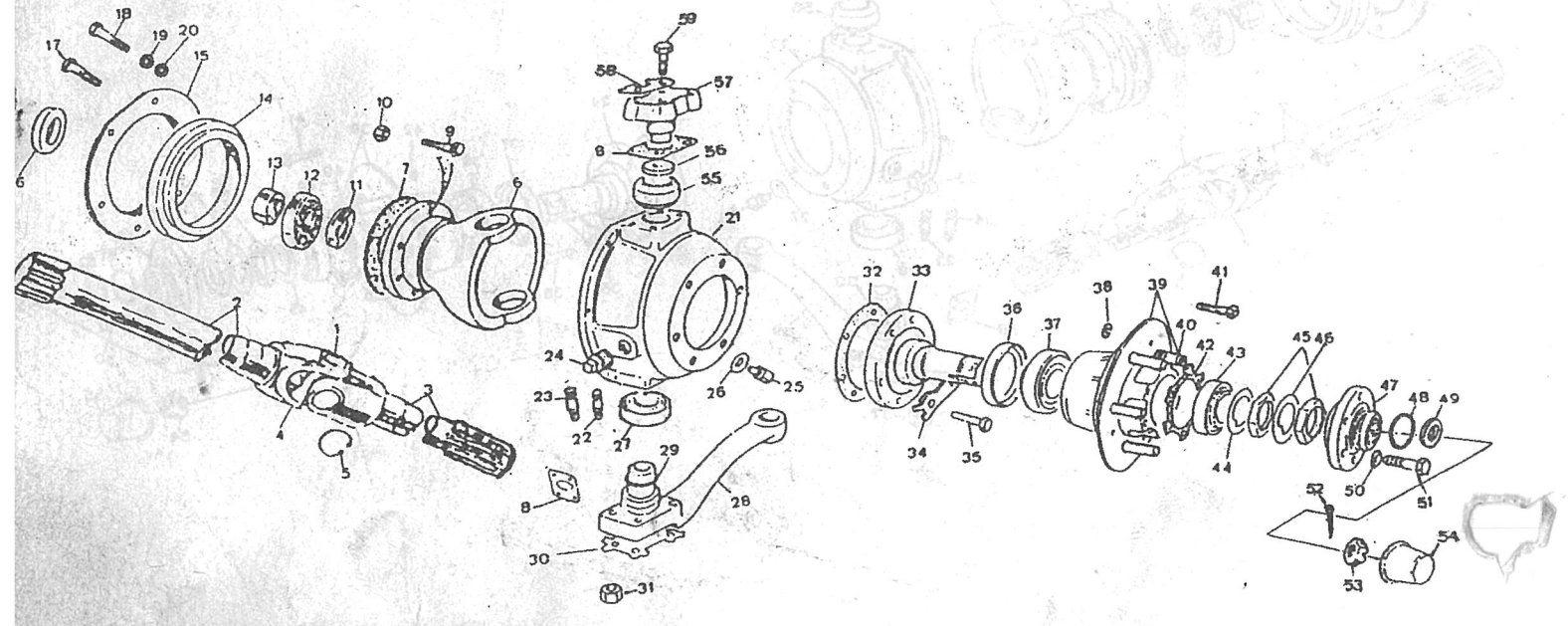

PUBLICACION N:790776 GRUPO-09 EJES DE RUEDA SUBGRUPO-JUNTAS UNIVERSALES
EDICION N: 1 GROUP-09 AXLES AND PROPELL SUBGROUP-UNIVERSAL JOINT
GROUPE-09 PONTS ET ARBRE TR SUBGROUPE-CARDAN ET MOYEUX

N.FIG PLATE N.FIG	N.PIEZA PARTNUMBER N.PIECE	CAN QTY OUT	DENOMINACION	DESCRIPTION	DENOMINATION	OBSERVACIONES
38	810003	12	ARANDELA MUELLE	SPRING WASHER	RONDELLE RESSORT	
39	137744	2	BUJE DELANTERO	FRONT NUB	MOYEU AVANT	
40	576825	10	ESPARRAGO	STUD	GOUJON	
41	184279	12	TORNILLO BUJE	HUB BOLT	BOULON DE MOYEU	
42	231505	2	JUNTA DE BRIDA	HUB DRIVING JOINT	JOINT DE ELEMENT D'E	
43	217270	2	RODAMIENTO	BEARING	ROULEMENT	
44	217352	2	ARANDELA CHAVETA	KEY WASHER	RONDELLE CLAVETTE	
45	217355K1	4	TUERCA	NUT	ECROU	
46	217353	2	ARANDELA FRENO	LOCKER	PIECE FREIN	
47	571235F1	2	BRIDA DE ARRASTRE	HUB DRIVING MEMBER	ELEMENT D'ENTRAINEME	
48	553263	2	JUNTA TORICA	RING JOINT	JOINT D'ETANCHEITE	
49	3300	2	ARANDELA PLANA	PLAIN WASHER	RONDELLE PLANE	
50	180426	12	ARANDELA MUELLE	SPRING WASHER	RONDELLE RESSORT	
51	180183	12	TORNILLO	BOLT	BOULON	
52	180309	2	PASADOR	PIN	GOUPILLE	
53	AFU1242	2	TUERCA	NUT	ECROU	
54	219098	2	TAPACUBOS	HUB CAP	COURE MOYEU	
55	539742	2	ALOJAMIENTO Y CASQUI	HOUSING AND BUSH	LOGEMENT ET BAGUE	
56	FRC8249	2	ARANDELA PRESION	THRUST WASHER	RONDELLE DE BUTEE	
57	576583	2	EJE DE GIRO	SWIVEL PIN UPPER	PIVOT SUPERLIEUR	
58	531001	4	FIADOR	LOCKER	ATTACHE	
59	188149	8	TORNILLO	BOLT	BOULON	

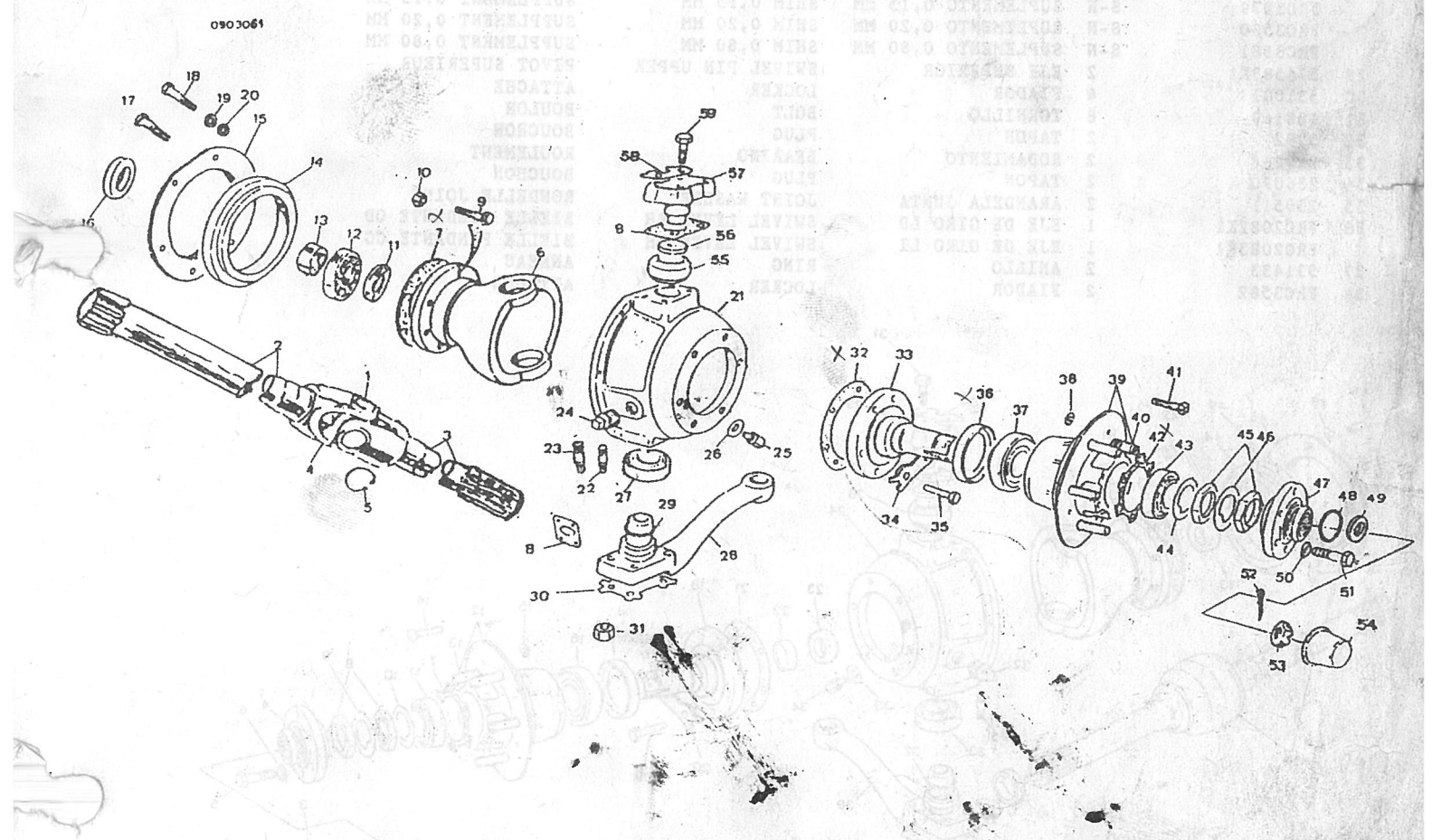

PUBLICACION N:790776 GRUPO=09 EJES DE RUEDA SUBGRUPO=JUNTAS UNIVERSALES
EDICION N: 1 GROUP=09 AXLES AND PROPELL SUBGROUP=UNIVERSAL JOINT
GROUPE=09 PONTS ET ARBRE TR SUBGROUPE=CARDAN ET MOYEUX

N.FIG PLATE N.FIG	N.PIEZA PARTNUMBER N.PIECE	CAN QTY OUT	DENOMINACION	DESCRIPTION	DENOMINATION	OBSERVACIONES
1	219098	2	TAPACUBOS	HUB CAP	BOUCHON DE MOYEU	
2	549473	2	ANILLO ELASTICO	CIRCLIP	CIRCLIP	
3	553263	2	ANILLO TORICO	RING	ANNEAU	
4	571711	2	BRIDA	FLAGE	BRIDE	
5	180183	12	TORNILLO	BOLT	BOULON	
6	180426	12	ARANDELA	WASHER	RONDELLE	
7	231505	2	JUNTA	JOINT	JOINT	
8	217355K1	4	TUERCA	NUT	ECROU	
9	217353	2	ARANDELA	WASHER	RONDELLE	
10	217352	2	ARANDELA	WASHER	RONDELLE	
11	217270	2	RODAMIENTO	BEARING	ROULEMENT	
12	137744	2	BUJE	FRONT HUB	MOYEU	
13	576825	10	ESPARRAGO	STUD	GOUJON	
14	184279	12	TORNILLO	BOLT	BOULON	
15	810003	12	ARANDELA	WASHER	RONDELLE	
16	217269K1	2	RODAMIENTO	BEARING	ROULEMENT	
17	239422E2	2	RETEN	OIL SEAL	RETAINER	
18	130779	2	MANGUETA	STUB AXLE	FUSSE	
19	576510	12	TORNILLO	BOLT	BOULON	
20	277311F1	6	FIADOR	LOCKER	ATTACHE	
21	277289	2	JUNTA	JOINT	JOINT	
22	130718	2	CASQUILLO	BUSH	BAGUE	
23	571059	4	RETEN	OIL SEAL	RETAINER	
24	130723	1	CARTER DE PIVOTE L/I	HOUSING FOR SWIVE LH	BOITER DE PIVOT CG	
	130724	1	CARTER DE PIVOTE L/D	HOUSING FOR SWIVE RH	BOITER DE PIVOT CD	
25	531043	4	ESPARRAGO	STUD	GOUJON	
	531494	4	ESPARRAGO	STUD	GOUJON	
26	539742K1	2	CASQUILLO RAILKO	RAILKO BUSCH	BAGUE RAILKO	
27	FRC8249	2	ARANDELA	WASHER	RONDELLE	
28	FRC3578	S-N	SUPLEMENTO 0,10 MM	SHIM 10 MM	SUPPLEMENT 0,10 MM	
	FRC3579	S-N	SUPLEMENTO 0,15 MM	SHIM 0,15 MM	SUPPLEMENT 0,15 MM	
	FRC3580	S-N	SUPLEMENTO 0,20 MM	SHIM 0,20 MM	SUPPLEMENT 0,20 MM	
	FRC3581	S-N	SUPLEMENTO 0,80 MM	SHIM 0,80 MM	SUPPLEMENT 0,80 MM	
29	576583K1	2	EJE SUPERIOR	SWIVEL PIN UPPER	PIVOT SUPERIEUR	
30	531001	4	FIADOR	LOCKER	ATTACHE	
31	188149	8	TORNILLO	BOLT	BOULON	
32	3292	2	TAPON	PLUG	BOUCHON	
33	217268	2	RODAMIENTO	BEARING	ROULEMENT	
34	236070	2	TAPON	PLUG	BOUCHON	
35	230511	2	ARANDELA JUNTA	JOINT WASHER	RONDELLE JOINT	
36	FRC2082K1	1	EJE DE GIRO LD	SWIVEL LEVER RH	BIELLE PENDANTE CD	
	FRC2083K1	1	EJE DE GIRO LI	SWIVEL LEVER LH	BIELLE PENDANTE CG	
37	531433	2	ANILLO	RING	ANNEAU	
38	FRC3582	2	FIADOR	LOCKER	ATTACHE	

090308

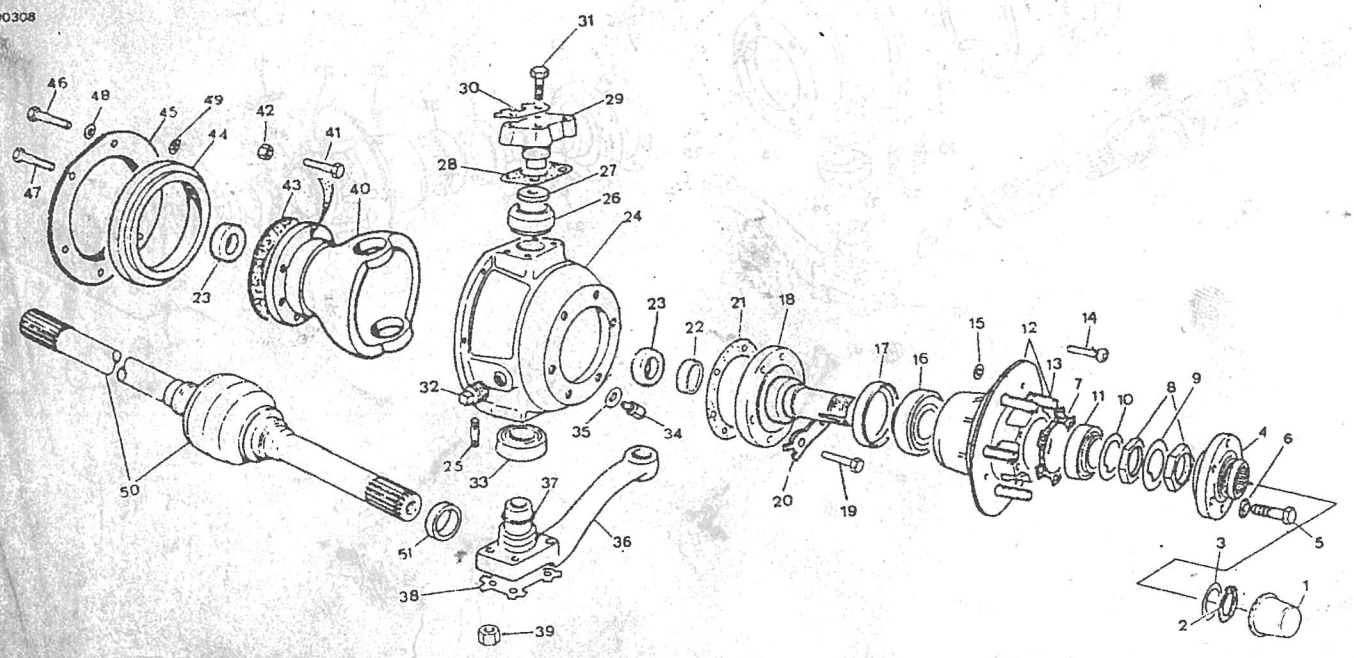

PUBLICACION N:790776 GRUPO=09 EJES DE RUEDA SUBGRUPO=JUNTAS UNIVERSALES
EDICION N: 1 GROUP=09 AXLES AND PROPELL SUBGROUP=UNIVERSAL JOINT
GROUPE=09 PONTS ET ARBRE TR SUBGROUPE=CARDAN ET MOYEUX

N.FIG PLATE N.FIG	N.PIEZA PARTNUMBER N.PIECE	CAN QTY OUT	DENOMINACION	DESCRIPTION	DENOMINATION	OBSERVACIONES
39	594104	8	TUERCA	NUT	ECROU	
40	130717	2	ALOJAMIENTO	HOUSING-SWIVEL	CARTER-LOGEMENT DE P	
41	576510	6	TORNILLO	BOLT	BOULON	
	576522	6	TORNILLO	BOLT	BOULON	
42	181165	12	TUERCA	NUT	ECROU	
43	232413	2	JUNTA	JOINT	JOINT	
44	502406	2	RETEN	OIL SEAL	RETAINER	
45	235968	2	SOPORTE	SUPPORT	SUPPORT	
46	181158	2	TORNILLO	BOLT	BOULON	
47	183138	10	TORNILLO	BOLT	BOULON	
48	3467	12	ARANDELA	WASHER	RONDELLE	
49	3074	12	ARANDELA MUELLE	SPRING WASHER	RONDELLE RESSORT	
50	137771	1	CONJ.SEMIEJE L/I	HALF SHAFT ASSY LH	ENS ARBRE DE ROUE CG	
	137772	1	CONJ.SEMIEJE L/D	HALF SHAFT ASSY RH	ENS ARBRE DE ROUE CD	
51	130560	S-N	SUPLEMENTO 1,00 MM	SHIM 1,00 MM	SUPPLEMENT 1,00 MM	
	130561	S-N	SUPLEMENTO 1,2 MM	SHIM 1,2 MM	SUPPLEMENT 1,2 MM	
	130562	S-N	SUPLEMENTO 1,4 MM	SHIM 1,4 MM	SUPPLEMENT 1,4 MM	
	130563	S-N	SUPLEMENTO 1,6 MM	SHIM 1,6 MM	SUPPLEMENT 1,6 MM	
	130564	S-N	SUPLEMENTO 1,8 MM	SHIM 1,8 MM	SUPPLEMENT 1,8 MM	
	130720	S-N	SUPLEMENTO 0'6 MM	SHIM 0'6 MM	SUPPLEMENT 0'6 MM	
	130721	S-N	SUPLEMENTO 0'8 MM	SHIM 0'8 MM	SUPPLEMENT 0'8 MM	

090308

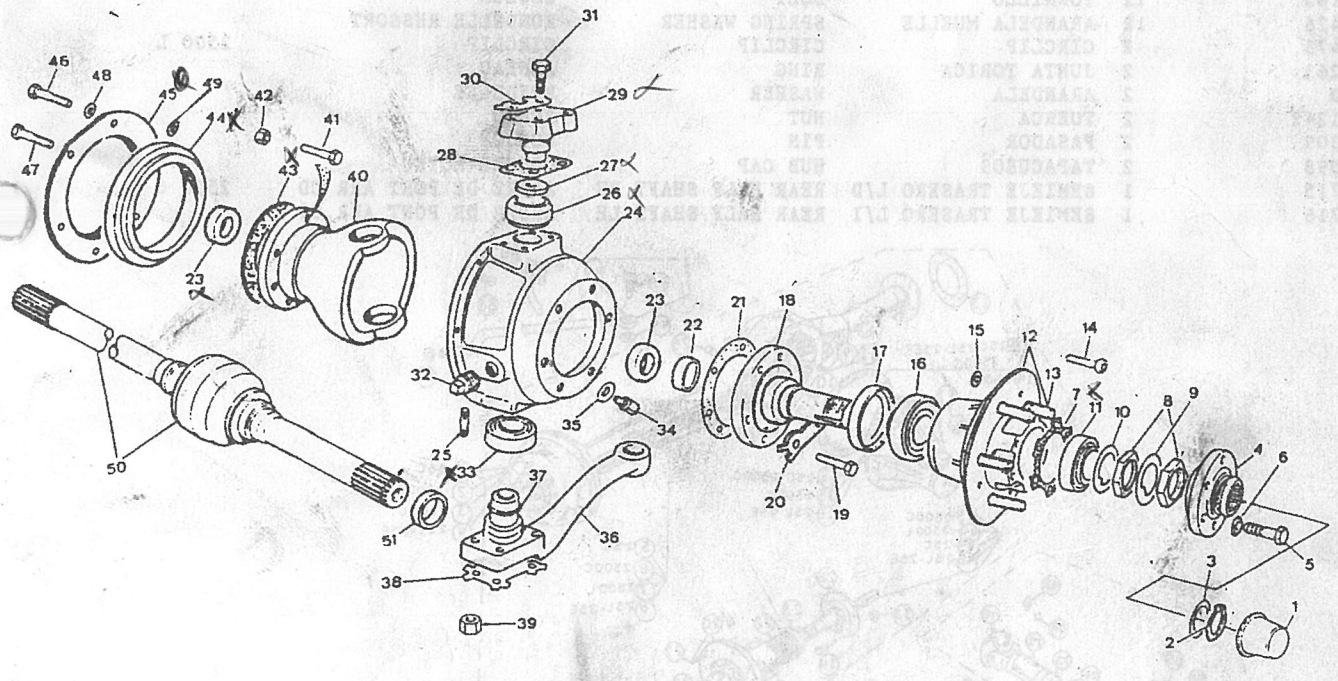

PUBLICACION N:790776 GRUPO=09 EJES DE RUEDA SUBGRUPO=EJE TRASERO
EDICION N: 1 GROUP=09 AXLES AND PROPELL SUBGROUP=BEAR AXLE
GROUPE=09 PONTS ET ARBRE TR SUBGROUPE=PONT ARRIERE

N.FIG PLATE N.FIG	N.PIEZA PARTNUMBER N.PIECE	CAN QTY OUT	DENOMINACION	DESCRIPTION	DENOMINATION	OBSERVACIONES
1	137797	1	EJE TRASERO	REAR EXLE	PONT ARRIERE	2'5 CORTO
2	137788	1	EJE TRASERO	REAR AXLE	PONT ARRIERE	2500 CORTO
3	137790	1	EJE TRASERO	REAR AXLE	PONT ARRIERE	2500 LARGO
4	137627	1	EJE TRASERO	REAR AXLE	PONT ARRIERE	2'5 L-2'5 ESPECIA
5	FRC3367F1	1	CARTER EJE TRASERO	REAR AXLE CASING	CARTER DE PONT ARRIE	2'5 CORTO
6	137768	1	CARTER EJE TRASERO	REAR AXLE CASING	CARTER DE PONT ARRIE	2500 CORTO
7	137792	1	CARTER EJE TRASERO	REAR AXLE CASING	CARTER DE PONT ARRIE	2500 LARGO
8	137708	1	CARTER EJE TRASERO	REAR AXLE CASING	CARTER DE PONT ARRIE	2'5 L-2'5ESPECIA
9	561195	4	ESPARRAGO 35'50 MM	STUD 35'50 MM	GOUJON 35'50 MM	
10	561196	6	ESPARRAGO 44'50 MM	STUD 44'50 MM	GOUJON 44'50 MM	
11	712679	4	ESPARRAGO 48 MM	STUD 48 MM	GOUJON 48 MM	2500 LARGO
12	712680	6	ESPARRAGO 58 MM	STUD 58 MM	GOUJON 58 MM	2500 LARGO
13	500978	2	JUNTA	JOINT	JOINT	
14	137779	1	CONJ.DIFERENCI 43:11	DIFERENTIAL AS 43:11	ENS DE DIFFERE 43:11	2'5 CORTO-2500 C
15	137528	1	CONJ.DIFERENCI 47:10	DIFERENTIAL AS 47:10	ENS DE DIFFERE 47:10	2500 LARGO
16	FRC5696F1	1	CONJ.DIFERENCI 47:10	DIFERENTIAL AS 47:10	ENS DE DIFFERE 47:10	2'5 LARGO-2'5 ES
17	181170	10	TUERCA	NUT	ECROU	
18	07316	1	JUNTA DIFERNCIAL	DIFERENTIAL JOINT	JOINT DE DIFFERE	
19	712316	1	JUNTA DIFERENCIAL	DIFERENTIAL JOINT	JOINT DE DIFFERE	2500 LARGO
20	576844	2	BUJE TRASERO	REAR HUB	MOYEU ARRIERE	
21	576825	10	ESPARRAGO	STUD	GOUJON	
22	217269K1	2	RODAMIENTO	BEARING	ROULEMENT	
23	239422E2	2	RETEN	OIL SEAL	RETAINER	
24	217270	2	RODAMIENTO	BEARING	ROULEMENT	
25	FRC3412	2	TAPON	PLUG	BOUCHON	
26	130778	2	MANGUETA	STUB AXLE	FUSSE	
27	217355K1	4	TUERCA DE MANGUETA	STUD AXLE NUT	ECROU DE MOYEU	
28	217353	2	ARANDELA FRENO	LOCKER	PIECE-FREIN	
29	217352	2	ARANDELA CON CHAVETA	KEY WASHER	RONDELLE CLAVETTE	
30	571235F1	2	BRIDA DE ARRASTRE	HUB DRIVING MEMBER	ELEMENT D'ENTRAINEME	
31	571711	2	BRIDA DE ARRASTRE	HUB DRIVING MEMBER	ELEMENT D'ENTRAINEME	2500 L
32	231505	2	JUNTA DE BRIDA	BUB DRIVING JOINT	JOINT DE ELEMENT D'E	
33	181165	12	TUERCA	NUT	ECROU	
34	576521	12	TORNILLO	BOLT	BOULON	
35	180183	12	TORNILLO	BOLT	BOULON	
36	180426	12	ARANDELA MUELLE	SPRING WASHER	RONDELLE RESSORT	
37	549473	2	CIRCLIP	CIRCLIP	CIRCLIP	2500 L
38	553263	2	JUNTA TORICA	RING	ANNEAU	
39	3300	2	ARANDELA	WASHER	RONDELLE	
40	AFU1242	2	TUERCA	NUT	ECROU	
41	180309	2	PASADOR	PIN	GOUJON	
42	219098	2	TAPACUBOS	HUB CAP	COUVRE MOYEU	
43	130715	1	SEMIEJE TRASERO L/D	REAR HALF SHAFT RH	ARBRE DE PONT ARR CD	2500 C
	130716	1	SEMIEJE TRASERO L/I	REAR HALF SHAFT LH	ARBRE DE PONT ARR CG	

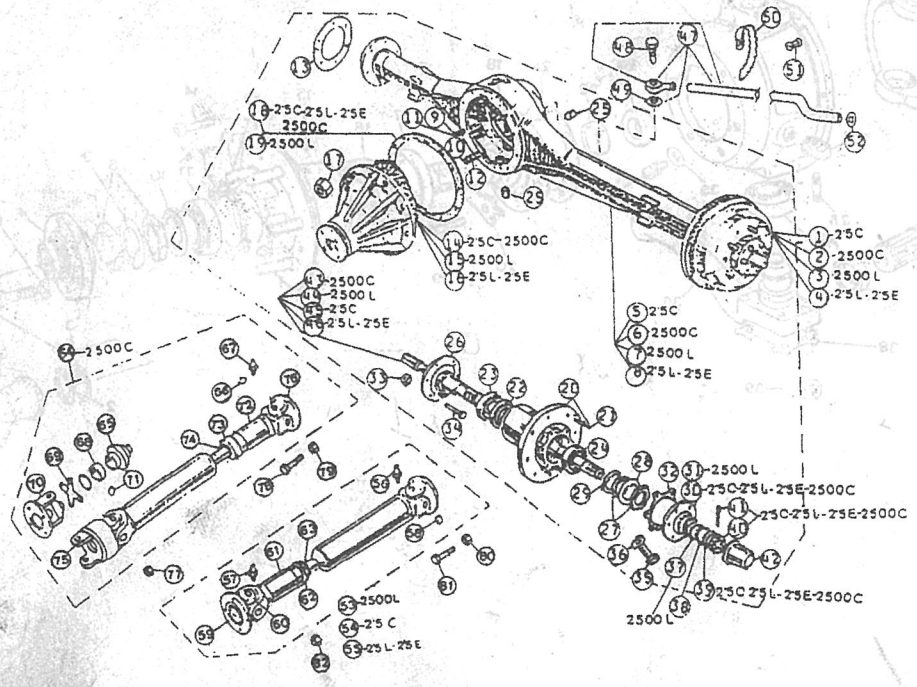

PUBLICACION N:790776 GRUPO=09 EJES DE RUEDA SUBGRUPO=EJE TRASERO
EDICION N: 1 GROUP=09 AXLES AND PROPELL SUBGROUP=BEAR AXLE
GROUPE=09 PONTS ET ARBRE TR SUBGROUPE=PONT ARRIERE

N.FIG PLATE N.FIG	N.PIEZA PARTNUMBER N.PIECE	CAN QTY OUT	DENOMINACION	DESCRIPTION	DENOMINATION	OBSERVACIONES
44	130566	1	SEMIEJE TRASERO L/D	REAR HALF SHAFT RH	ARBRE DE PONT ARRE C	2500 L
	130567	1	SEMIEJE TRASERO L/I	REAR HALF SHAFT LH	ARBRE DE PONT ARRE C	
45	549495	1	SEMIEJE TRASERO L/D	REAR HALF SHAFT RH	ARBRE DE PONT ARRE C	2'5 C
	549496	1	SEMIEJE TRASERO L/I	REAR HALF SHAFT LH	ARBRE DE PONT ARR CG	
46	549495F1	1	SEMIEJE TRASERO L/D	REAR HALF SHAFT RH	ARBRE DE PONT ARR CD	2'5 L-2'5 ESP.
	549496F1	1	SEMIEJE TRASERO L/I	REAR HALF SHAFT LH	ARBRE DE PONT ARR CG	
47	595473F1	1	CONJ.TUBO Y VALVULA	PIPE AND VALVE ASSY	ENS TUYAU ET SOUPAPE	
48	595478	1	TORNILLO RACOR	RACORD BOLT	BOULON RACCORD	
49	189501	2	ARANDELA	WASHER	RONDELLE	
50	240430	3	ABRAZADERA	CLAMP	ETRIER	
51	06860	1	GOMA	RUBBER	CAOUTCHOUC	
52	312856	1	ARANDELA GOMA	RUBBER WASHER	RONDELLE CAOUTCHOUC	
53	121205	1	ARBOL DE TRASMI.TRA.	PROPELLER SHAFT	ARBRE DE TRANSMISSIO	2500 L
54	553001	1	ARBOL DE TRANSMI.TRA	PROPELLER SHAFT	ARBRE DE TRANSMISSIO	2'5 C
55	553002	1	ARBOL DE TRANSMI.TRA	PROPELLER SHAFT	ARBRE DE TRANSMISSIO	2'5 L-2'5 E
56	549229	2	ENGRASADOR	GREASER	GRAISSEUR	
57	110414	2	ENGRASADOR	GREASER	GRAISSEUR	
58	242522E1	8	CIRCLIP	CIRCLIP	CIRCLIP	
59	600656	2	BRIDA	FLANGE	BRIDE	
60	541858	2	CRUCETA	JOURNAL	CROISILLON	
61	600655	1	CUERPO ESTRIADO	CHAMFERED MEMBER	CORPS STRIE	
62	193736	1	CAZOLETA DE CIERRE	LOCK CUP	CURETTE DE FERMETURE	
63	193735	1	JUNTA DE ESTANQUEIDA	SEALING WASHER	JOINT D'ETANCHEITE	
64	121299	1	ARBOL DE TRANSMI.TRA	PROPELLER SHAFT	ARBRE DE TRANSMISSIO	2500 C
65	194813	1	GUARDAPOLVOS	DIST COVER	PARE POUSSIERE	
66	242522E1	12	CIRCLIP	CIRCLIP	CIRCLIP	
67	110414	3	ENGRASADOR MGX1-15	GREASER MGX1-15	GRAISSEUR MGX1-15	
68	194815	1	ROTULA	BALL JOINT	ROTULE	
69	194816	1	CRUCETA	JOURNAL	CROISILLON	
70	194817	1	BRIDA	FLANGE	BRIDE	
71	193743	1	ANILLO	RING	ANNEAU	
72	600655	1	CUERPO ESTRIADO	CHAMFERED MEMBER	CORPS STRIE	
73	193736	1	CAZOLETA DE CIERRE	LOCK CUP	CURETTE DE FERMETURE	
74	193735	1	JUNTA DE ESTANQUEIDA	SEALING WASHER	JOINT D'ETANCHEITE	
75	194814	1	BRIDA	FLANGE	BRIDE	
76	194810	1	BRIDA	FLANGE	BRIDE	
77	509751	4	TUERCA	NUT	ECROU	
78	509045	4	TORNILLO	BOLT	BOULON	
79	181170	4	TUERCA	NUT	ECROU	
80	181170	4	TUERCA	NUT	ECROU	
81	509045	4	TORNILLO	BOLT	BOULON	
82	509751	4	TUERCA	NUT	ECROU	

090404

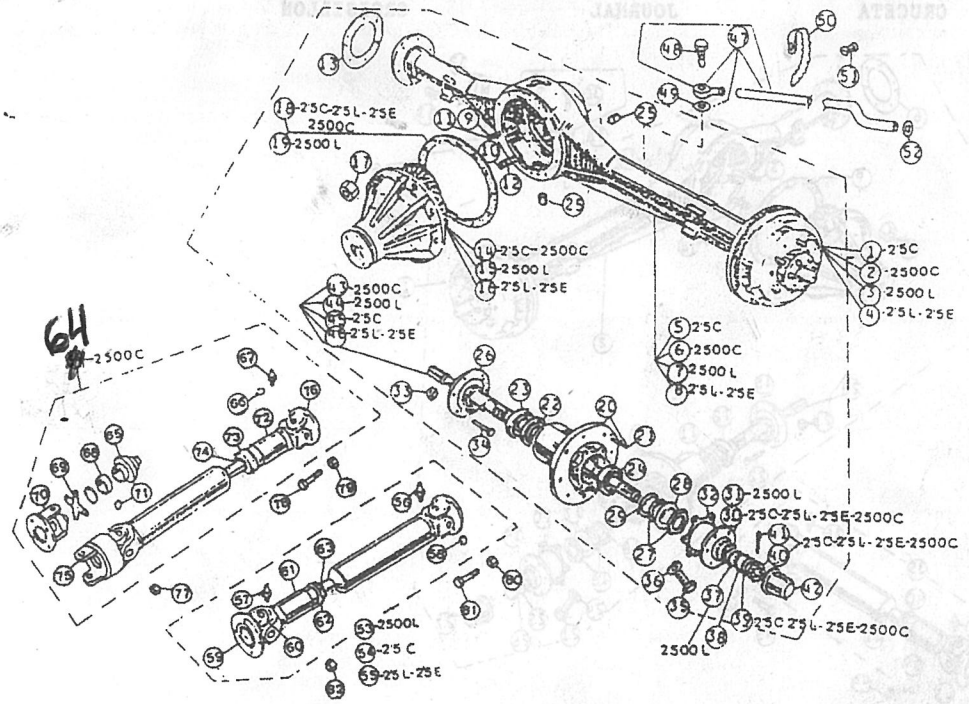

PUBLICACION N:790776 GRUPO-09 EJES DE RUEDA SUBGRUPO-EJE TRASERO
EDICION N: 1 GROUP-09 AXLES AND PROPELL SUBGROUP-REAR AXLE
GROUPE-09 PONTS ET ARBRE TR SUBGROUPE-PONT ARRIERE

N.FIG PLATE N.FIG	N.PIEZA PARTNUMBER N.PIECE	CAN QTY OUT	DENOMINACION	DESCRIPTION	DENOMINATION	OBSERVACIONES
1	137667	1	EJE TRASERO	REAR AXLE	PONT ARRIERE	EJE REFORZADO
2	137707	1	CARTER EJE TRASERO	REAR AXLE CASING	CARTER DE PONT ARRIE	
3	712679	4	ESPARRAGO 48 MM	STUD 48 MM	GOUJON 48 MM	
4	712680	6	ESPARRAGO 58 MM	STUD 58 MM	GOUJON 58 MM	
5	137528	1	CONJ.DIFERENCI 47:10	DIFERENTIAL AS 47:10	ENS DE DIFFERE 47:10	
6	500978	2	JUNTA	JOINT	JOINT	
7	181170	10	TUERCA	NUT	ECROU	
8	712316	1	JUNTA DE DIFERENCIAL	DIFERENTIAL JOINT	JOINT DE DIFFERE	
9	576844	2	BUJE TRASERO	REAR HUB	MOYEU ARRIERE	
10	576825	10	ESPARRAGO	STUD	GOUJON	
11	217269K1	2	RODAMIENTO	BEARING	ROULEMENT	
12	239422E2	2	RETEN	OIL SEAL	RETAINER	
13	217270	2	RODAMIENTO	BEARING	ROULEMENT	
14	FRC3412	2	TAPON	PLUG	BOUCHON	
15	130778	2	MANGUETA	STUB AXLE	FUSSE	
16	217355K1	4	TUERCA	NUT	ECROU	
17	217353	2	ARANDELA FRENO	LOCKER	PIECE FREIN	
18	217352	2	ARANDELA CHAVETA	KEY WASHER	RONDELLE CLAVETTE	
19	571711	2	BRIDA DE ARRASTRE	HUB DRIVING MEMBER	ELEMENT D'ENTRAINEME	
20	231505	2	JUNTA DE BRIDA	HUB DRIVING JOINT	JOINT DE ELEMENT D'E	
21	181165	12	TUERCA	NUT	ECROU	
22	576521	12	TORNILLO	BOLT	BOULON	
23	180183	12	TORNILLO	BOLT	BOULON	
24	180426	12	ARANDELA	WASHER	RONDELLE	
25	549473	2	CIRCLIP	CIRCLIP	CIRCLIP	
26	553263	2	JUNTA	JOINT	JOINT	
27	219098	2	TAPACUBOS	HUB CAP	COURE MOYEU	
28	576767F1	1	CONJ.SEMIEJE L/D	HALF SHAFT ASSY RH	ENS ARBRE DE ROVE CD	
	576768F1	1	CONJ.SEMIEJE L/I	HALF SHAFT ASSY LH	ENS ARBRE DE ROVE CG	
29	595473F1	1	CONJ.TUBO Y VALVULA	PIPE AND VALVE ASSY	ENS TUYAU ET SOUPAPE	
30	595478	1	TORNILLO RACORD	RACORD BOLT	BOULON RACCORD	
31	189501	2	ARANDELA	WASHER	RONDELLE	
32	240430	3	ABRAZADERA	CLAMP	ETRIER	
33	06860	1	GOMA	RUBBER	CAOUTCHOUC	
34	312856	1	ARANDELA GOMA	RUBBER WASHER	RONDELLE CAOUTCHOUC	
35	127399	1	ARBOL DE TRANSMI.TRA	PROPELLER SHAFT	ARBRE DE TRANSMISSIO	
36	549299	2	ENGRASADOR	GREASER	GRAISSEUR	
37	110414	2	ENGRASADOR	GREASER	GRAISSEUR	
38	242522E1	8	CIRCLIP	CIRCLIP	CIRCLIP	
39	600655	1	CUERPO ESTRIADO	CHAMFERED MEMBER	CORPS STRIE	
40	193736	1	CAZOLETA DE CIERRE	LOCK CUP	CURETTE DE FERMETURE	
41	193735	1	JUNTA DE ESTANQUEIDA	SEALING WASHER	JOINT D'ETANCHEITE	
42	600656	2	BRIDA	FLANGE	BRIDE	
43	541858	2	CRUCETA	JOURNAL	CROISILLON	

090405

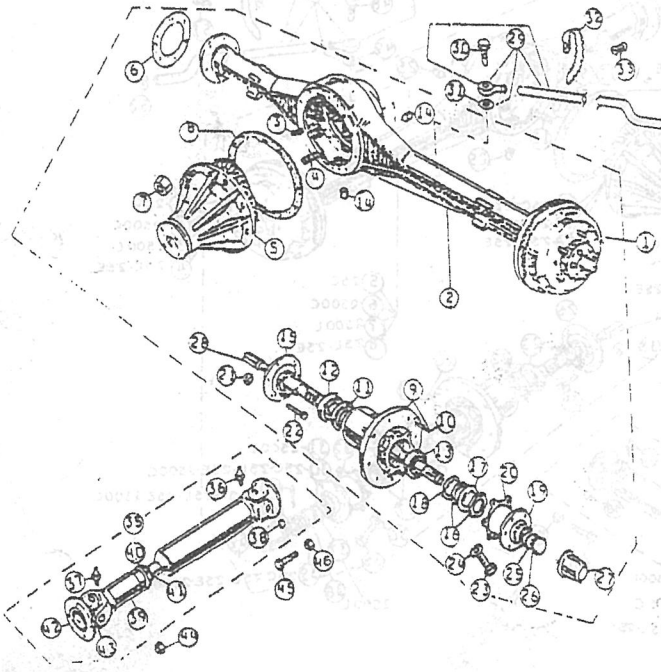

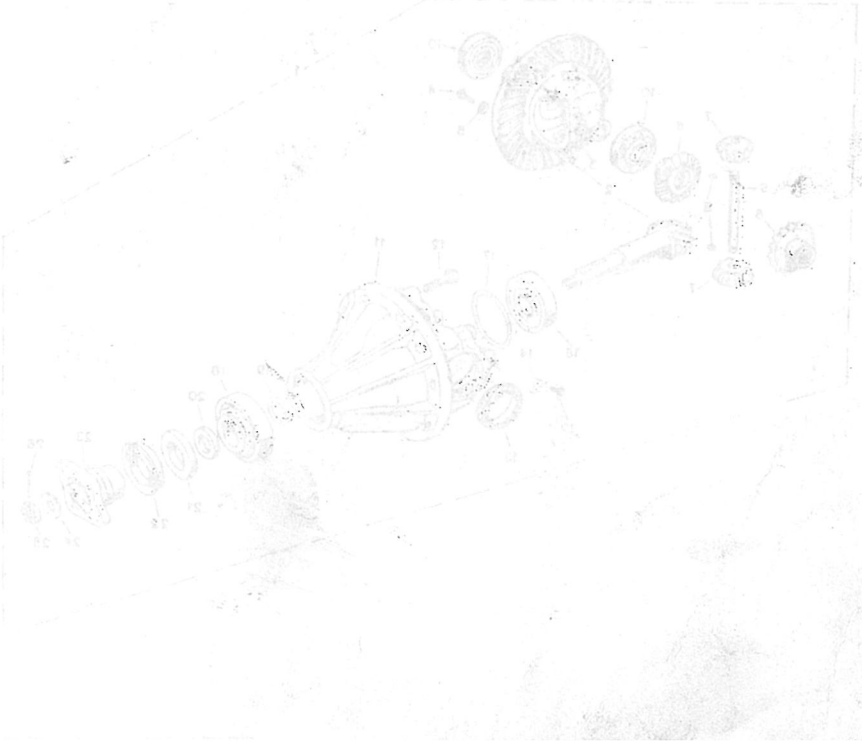

PUBLICACION N:790776 GRUPO=09 EJES DE RUEDA SUBGRUPO=DIFERENCIAL
EDICION N: 1 GROUP=09 AXLES AND PROPELL SUBGROUP=DIFERENTIAL
GROUPE=09 PONTS ET ARBRE TR SUBGROUPE=DIFFERENTIEL

N.FIG PLATE N.FIG	N.PIEZA PARTNUMBER N.PIECE	CAN QTY OUT	DENOMINACION	DESCRIPTION	DENOMINATION	OBSERVACIONES
1	137779	1	CONJ DIFERENCI 43:11	DIFERENTIAL AS 4:1	ENS DIFFERENTI 43:11	2'5 C-2500 C
2	137751	1	CORONA Y PI/ON 43:11	CROWN WHEELAND 43:11	COURONNE ET PI 43:11	
3	FRC4622	1	CAJA DE SATELITES	DIFERENTIAL CASSING	PORTE SATELLITE	D 11-87
4	593692	10	TORNILLO	BOLT	BOULON	
5	593693	10	FIADOR	LOCKER	ATTACHE	
6	FRC3777	2	PLANETARIO	DIFFERENTIAL WHEEL	PIGNON PLANETAIRE	
7	FRC3293	2	SATELITE	DIFFERENTIAL PINION	PIGNON SATELLITE	
8	241999	2	ANILLO ELASTICO	CIRCLIP	CIRCLIP	
9	599945	1	EJE SATELITES	SPINDLE FOR PINION	AXE DE SATELLITES	
10	130673	2	COJINETE	BEARING	COUSSINETT	D 11-87
11	FRC4112F1	1	CARTER DIFERENTIAL	BEVEL PINION HOUSING	CARTER DE DIFFERENTI	D 11-87
12	BH112101	4	TORNILLO	BOLT	BOULON	
13	FRC5204	2	TUERCA	NUT	ECROU	D 11-87
14	FRC5661	2	U/ETA	LOCK TAB	CRABOT	D 11-87
15	576159	2	PASADOR	SPLIT PIN	COUPILLE	
16	539706	1	COJINETE	BEARING	COUSSINET	
17	130524	S-N	SUPLEMENTO 0,71	SHIM 0,71	SUPPLEMENT 0,71	
	130526	S-N	SUPLEMENTO 0,76	SHIM 0,76	SUPPLEMENT 0,76	
	130528	S-N	SUPLEMENTO 0,81	SHIM 0,81	SUPPLEMENT 0,81	
	130530	S-N	SUPLEMENTO 0,86	SHIM 0,86	SUPPLEMENT 0,86	
	130532	S-N	SUPLEMENTO 0,91	SHIM 0,91	SUPPLEMENT 0,91	
	130534	S-N	SUPLEMENTO 1,68	SHIM 1,68	SUPPLEMENT 1,68	
	130536	S-N	SUPLEMENTO 1,73	SHIM 1,73	SUPPLEMENT 1,73	
	130538	S-N	SUPLEMENTO 1,78	SHIM 1,78	SUPPLEMENT 1,78	
	130540	S-N	SUPLEMENTO 1,83	SHIM 1,83	SUPPLEMENT 1,83	
	549230	S-N	SUPLEMENTO 0,96	SHIM 0,96	SUPPLEMENT 0,96	
	549232	S-N	SUPLEMENTO 1,01	SHIM 1,01	SUPPLEMENT 1,01	
	549234	S-N	SUPLEMENTO 1,06	SHIM 1,06	SUPPLEMENT 1,06	
	549236	S-N	SUPLEMENTO 1,11	SHIM 1,11	SUPPLEMENT 1,11	
	549238	S-N	SUPLEMENTO 1,16	SHIM 1,16	SUPPLEMENT 1,16	
	549240	S-N	SUPLEMENTO 1,21	SHIM 1,21	SUPPLEMENT 1,21	
	549242	S-N	SUPLEMENTO 1,27	SHIM 1,27	SUPPLEMENT 1,27	
	549244	S-N	SUPLEMENTO 1,32	SHIM 1,32	SUPPLEMENT 1,32	
	549246	S-N	SUPLEMENTO 1,37	SHIM 1,37	SUPPLEMENT 1,37	
	549248	S-N	SUPLEMENTO 1,42	SHIM 1,42	SUPPLEMENT 1,42	
	549250	S-N	SUPLEMENTO 1,47	SHIM 1,47	SUPPLEMENT 1,47	
	549252	S-N	SUPLEMENTO 1,52	SHIM 1,52	SUPPLEMENT 1,52	
	576236	S-N	SUPLEMENTO 1,57	SHIM 1,57	SUPPLEMENT 1,57	
	576237	S-N	SUPLEMENTO 1,60	SHIM 1,60	SUPPLEMENT 1,60	
	576238	S-N	SUPLEMENTO 1,62	SHIM 1,62	SUPPLEMENT 1,62	
	576239	S-N	SUPLEMENTO 1,65	SHIM 1,65	SUPPLEMENT 1,65	
18	539707	1	COJINETE	BEARING	COUSSINET	
19	130767	S-N	SUPLEMENTO 3,53	SHIM 3,53	SUPPEMENT 3,53	
	130768	S-N	SUPLEMENTO 3.55	SHIM 3,55	SUPPEMENT 3,55	

090507

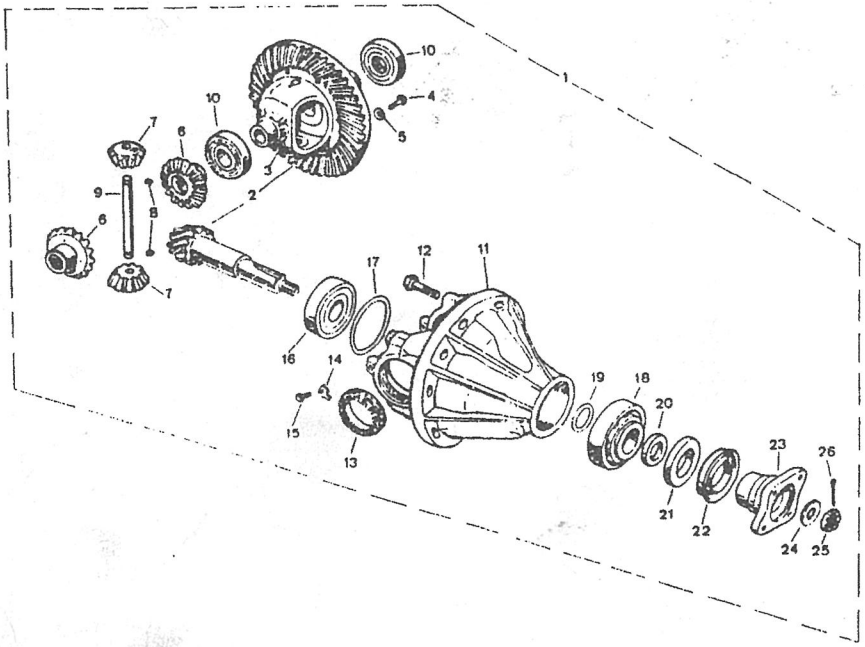

PUBLICACION N:790776 GRUPO=09 EJES DE RUEDA SUBGRUPO=DIFERENCIAL
EDICION N: 1 GROUP=09 AXLES AND PROPELL SUBGROUP=DIFERENTIAL
GROUPE=09 PONTS ET ARBRE TR SUBGROUPE=DIFFERENTIEL

N.FIG PLATE N.FIG	N.PIEZA PARTNUMBER N.PIECE	CAN QTY OUT	DENOMINACION	DESCRIPTION	DENOMINATION	OBSERVACIONES
	130769	S-N	SUPLEMENTO 3,58	SHIM 3,58	SUPPLEMENT 3,58	
	130770	S-N	SUPLEMENTO 3,60	SHIM 3,60	SUPPLEMENTO 3,60	
	130771	S-N	SUPLEMENTO 3,63	SHIM 3,63	SUPPLEMENT 3,63	
	549254	S-N	SUPLEMENTO 3,65	SHIM 3,65	SUPPLEMENT 3,65	
	549256	S-N	SUPLEMENTO 3,70	SHIM 3,70	SUPPLEMENT 3,70	
	549258	S-N	SUPLEMENTO 3,75	SHIM 3,75	SUPPLEMENT 3,75	
	549260	S-N	SUPLEMENTO 3,81	SHIM 3,81	SUPPLEMENT 3,81	
	549262	S-N	SUPLEMENTO 3,86	SHIM 3,86	SUPPLEMENT 3,86	
	549264	S-N	SUPLEMENTO 3,91	SHIM 3,91	SUPPLEMENT 3,91	
	549266	S-N	SUPLEMENTO 3,96	SHIM 3,96	SUPPLEMENT 3,96	
	549268	S-N	SUPLEMENTO 4,01	SHIM 4,01	SUPPLEMENT 4,01	
	549270	S-N	SUPLEMENTO 4,06	SHIM 4,06	SUPPLEMENT 4,06	
	549272	S-N	SUPLEMENTO 4,11	SHIM 4,11	SUPPLEMENT 4,11	
	549274	S-N	SUPLEMENTO 4,16	SHIM 4,16	SUPPLEMENT 4,16	
	549276	S-N	SUPLEMENTO 4,21	SHIM 4,21	SUPPLEMENT 4,21	
	549278	S-N	SUPLEMENTO 4,26	SHIM 4,26	SUPPLEMENT 4,26	
	549280	S-N	SUPLEMENTO 4,31	SHIM 4,31	SUPPLEMENT 4,31	
	549282	S-N	SUPLEMENTO 4,36	SHIM 4,36	SUPPLEMENT 4,36	
	549284	S-N	SUPLEMENTO 4,41	SHIM 4,41	SUPPLEMENT 4,41	
20	539745	1	ARANDELA	WASHER	RONDELLE	
21	217507F1	1	RETEN	RETAINER	ARRETORI	
22	236072	1	GUARDAPOLVOS	DUST COVER	PARE-POUSSIERE	
23	FRC3002	1	BRIDA	FLANGE	BRIDE	
24	513454	1	ARANDELA	WASHER	RONDELLE	
25	AFU1242	1	TUERCA	NUT	ECROU	
26	180309	1	PASADOR	PIN	GOUPILLE	

090507

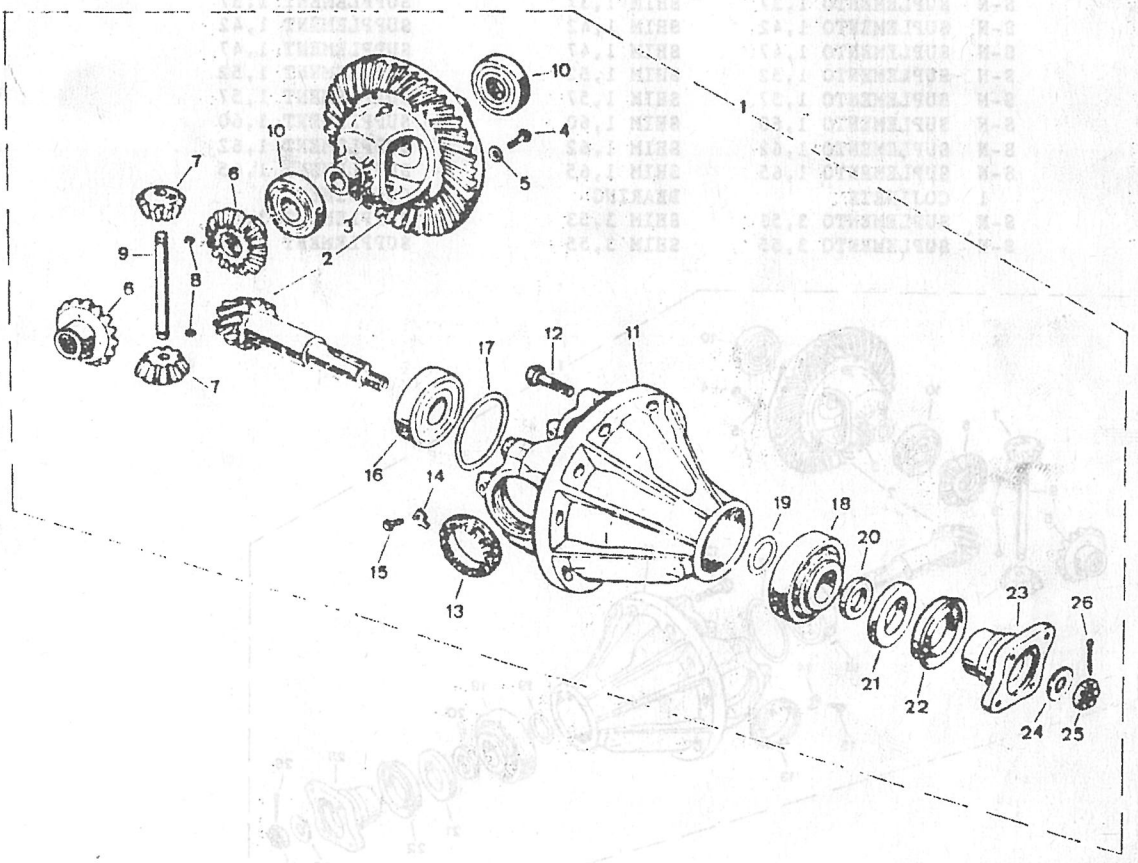

PUBLICACION N:790776 GRUPO=09 EJES DE RUEDA SUBGRUPO=DIFERENCIAL DELANTER
EDICION N: 1 GROUP=09 AXLES AND PROPELL SUBGROUP=FRONT DIFERENTIAL
GROUPE=09 PONTS ET ARBRE TR SUBGROUPE=DIFFERENTIEL AVANT

N.FIG PLATE N.FIG	N.PIEZA PARTNUMBER N.PIECE	CAN QTY OUT	DENOMINACION	DESCRIPTION	DENOMINATION	OBSERVACIONES
1	FRC5696F1	1	CONJ.DIFERENCI 47:10	DIFERENTIAL AS 47:10	ENS DIFFERENTI 47:10	2'5 L-2'5 E-2500L
2	FRC4029	1	CORONA Y PI\ON 47:10	CROWN WHEELAND 47:10	COURONNE ET PI 417:1	
3	FRC4622	1	CAJA DE SATELITES	DIFERENTIAL CASSING	PORTE SATELLITE	
4	593692	10	TORNILLO	BOLT	BOULON	
5	593693	10	FIADOR	LOCKER	ATTACHE	
6	FRC3777	2	PLANETARIO	DIFFERENTIAL WHEEL	PIGNON PLANETAIRE	
7	FRC3293	2	SATELITE	DIFFERENTIAL PINION	PIGNON SATELLITE	
8	241999	2	ANILLO ELASTICO	CIRCLIP	CIRCLIP	
9	599945	1	EJE DE SATELITES	SPINDLE FOR PINION	AXE DE SATELLITES	
10	130673	2	RODAMIENTO	BEARING	ROULEMENT	
11	FRC4112F1	1	CARTER DIFERENTIAL	BEVEL PINION HOUSING	CARTER DE DIFFERENTI	
12	BH112101	4	TORNILLO	BOLT	BOULON	
13	FRC5204	2	TUERCA	NUT	ECROU	
14	FRC5661	2	U/ETA	LOCK TAB	CRABOT	
15	576159	2	PASADOR	SPLIT PIN	GOUPILLE	
16	539706	1	COJINETE	BEARING	COUSSINET	
17	130524	S-N	SUPLEMENTO 0,71	SHIM 0,71	SUPPLEMENT 0,71	
	130526	S-N	SUPLEMENTO 0,76	SHIM 0,76	SUPPLEMENT 0,76	
	130528	S-N	SUPLEMENTO 0,81	SHIM 0,81	SUPPLEMENT 0,81	
	130530	S-N	SUPLEMENTO 0,86	SHIM 0,86	SUPPLEMENT 0,86	
	130532	S-N	SUPLEMENTO 0,91	SHIM 0,91	SUPPLEMENT 0,91	
	130534	S-N	SUPLEMENTO 1,68	SHIM 1,68	SUPPLEMENT 1,68	
	130536	S-N	SUPLEMENTO 1,73	SHIM 1,73	SUPPLEMENT 1,73	
	130538	S-N	SUPLEMENTO 1,78	SHIM 1,78	SUPPLEMENT 1,78	
	130540	S-N	SUPLEMENTO 1,83	SHIM 1,83	SUPPLEMENT 1,83	
	549230	S-N	SUPLEMENTO 0,96	SHIM 0,96	SUPPLEMENTO 0,96	
	549232	S-N	SUPLEMENTO 1,01	SHIM 1,01	SUPPLEMENTO 1,01	
	549234	S-N	SUPLEMENTO 1,06	SHIM 1,06	SUPPLEMENTO 1,06	
	549236	S-N	SUPLEMENTO 1,11	SHIM 1,11	SUPPLEMENTO 1,11	
	549238	S-N	SUPLEMENTO 1,16	SHIM 1,16	SUPPLEMENTO 1,16	
	549240	S-N	SUPLEMENTO 1,21	SHIM 1,21	SUPPLEMENTO 1,21	
	549242	S-N	SUPLEMENTO 1,27	SHIM 1,27	SUPPLEMENTO 1,27	
	549244	S-N	SUPLEMENTO 1,32	SHIM 1,32	SUPPLEMENTO 1,32	
	549246	S-N	SUPLEMENTO 1,37	SHIM 1,37	SUPPLEMENT 1,37	
	549248	S-N	SUPLEMENTO 1,42	SHIM 1,42	SUPPLEMENT 1,42	
	549250	S-N	SUPLEMENTO 1,47	SHIM 1,47	SUPPLEMENT 1,47	
	549252	S-N	SUPLEMENTO 1,52	SHIM 1,52	SUPPLEMENT 1,52	
	576236	S-N	SUPLEMENTO 1,57	SHIM 1,57	SUPPLEMENT 1,57	
	576237	S-N	SUPLEMENTO 1,60	SHIM 1,60	SUPPLEMENT 1,60	
	576238	S-N	SUPLEMENTO 1,62	SHIM 1,62	SUPPLEMENT 1,62	
	576239	S-N	SUPLEMENTO 1,65	SHIM 1,65	SUPPLEMENT 1,65	
18	539707	1	COJINETE	BEARING	COUSSINET	
19	130767	S-N	SUPLEMENTO 3,53	SHIM 3,53	SUPPLEMENT 3,53	
	130768	S-N	SUPLEMENTO 3,55	SHIM 3,55	SUPPLEMENT 3,55	

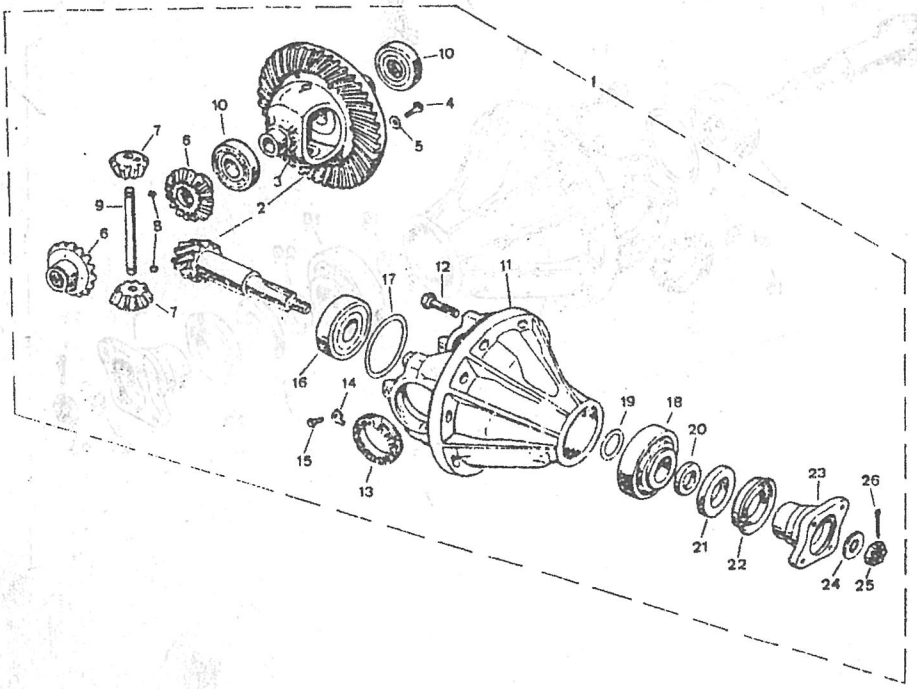

PUBLICACION N:790776 GRUPO=09 EJES DE RUEDA SUBGRUPO=DIFERENCIAL DELANTER
EDICION N: 1 GROUP=09 AXLES AND PROPELL SUBGROUP=FRONT DIFERENTIAL
GROUPE=09 PONTS ET ARBRE TR SUBGROUPE=DIFFERENTIEL AVANT

N.FIG PLATE N.FIG	N.PIEZA PARTNUMBER N.PIECE	CAN QTY OUT	DENOMINACION	DESCRIPTION	DENOMINATION	OBSERVACIONES
	130769	S-N	SUPLEMENTO 3,58	SHIM 3,58	SUPPLEMENT 3,58	
	130770	S-N	SUPLEMENTO 3,60	SHIM 3,60	SUPPLEMENT 3,63	
	130771	S-N	SUPLEMENTO 3,63	SHIM 3,63	SUPPLEMENT 3,63	
	549254	S-N	SUPLEMENTO 3,65	SHIM 3,65	SUPPLEMENT 3,65	
	549256	S-N	SUPLEMENTO 3,70	SHIM 3,70	SUPPLEMENT 3,70	
	549258	S-N	SUPLEMENTO 3,75	SHIM 3,75	SUPPLEMENT 3,75	
	549260	S-N	SUPLEMENTO 3,81	SHIM 3,81	SUPPLEMENT 3,81	
	549262	S-N	SUPLEMENTO 3,86	SHIM 3,86	SUPPLEMENT 3,86	
	549264	S-N	SUPLEMENTO 3,91	SHIM 3,91	SUPPLEMENT 3,91	
	549266	S-N	SUPLEMENTO 3,96	SHIM 3,96	SUPPLEMENT 3,96	
	549268	S-N	SUPLEMENTO 4,01	SHIM 4,01	SUPPLEMENT 4,01	
	549270	S-N	SUPLEMENTO 4,06	SHIM 4,06	SUPPLEMENT 4,06	
	549272	S-N	SUPLEMENTO 4,11	SHIM 4,11	SUPPLEMENT 4,11	
	549274	S-N	SUPLEMENTO 4,16	SHIM 4,16	SUPPLEMENT 4,16	
	549276	S-N	SUPLEMENTO 4,21	SHIM 4,21	SUPPLEMENT 4,21	
	549278	S-N	SUPLEMENTO 4,26	SHIM 4,26	SUPPLEMENT 4,26	
	549280	S-N	SUPLEMENTO 4,31	SHIM 4,31	SUPPLEMENT 4,31	
	549282	S-N	SUPLEMENTO 4,36	SHIM 4,36	SUPPLEMENT 4,36	
	549284	S-N	SUPLEMENTO 4,41	SHIM 4,41	SUPPLEMENT 4,41	
20	539745	1	ARANDELA	WASHER	RONDELLE	
21	217507F1	1	RETEN	RETAINER	ARRETOIR	
22	236072	1	GUARDAPOLVOS	DUST COVER	PARE-POUSSIERE	
23	FRC3002	1	BRIDA	FLANGE	BRIDE	
24	513454	1	ARANDELA	WASHER	RONDELLE	
25	AFU1242	1	TUERCA	NUT	ECROU	
26	180309	1	PASADOR	PIN	GOUPILLE	

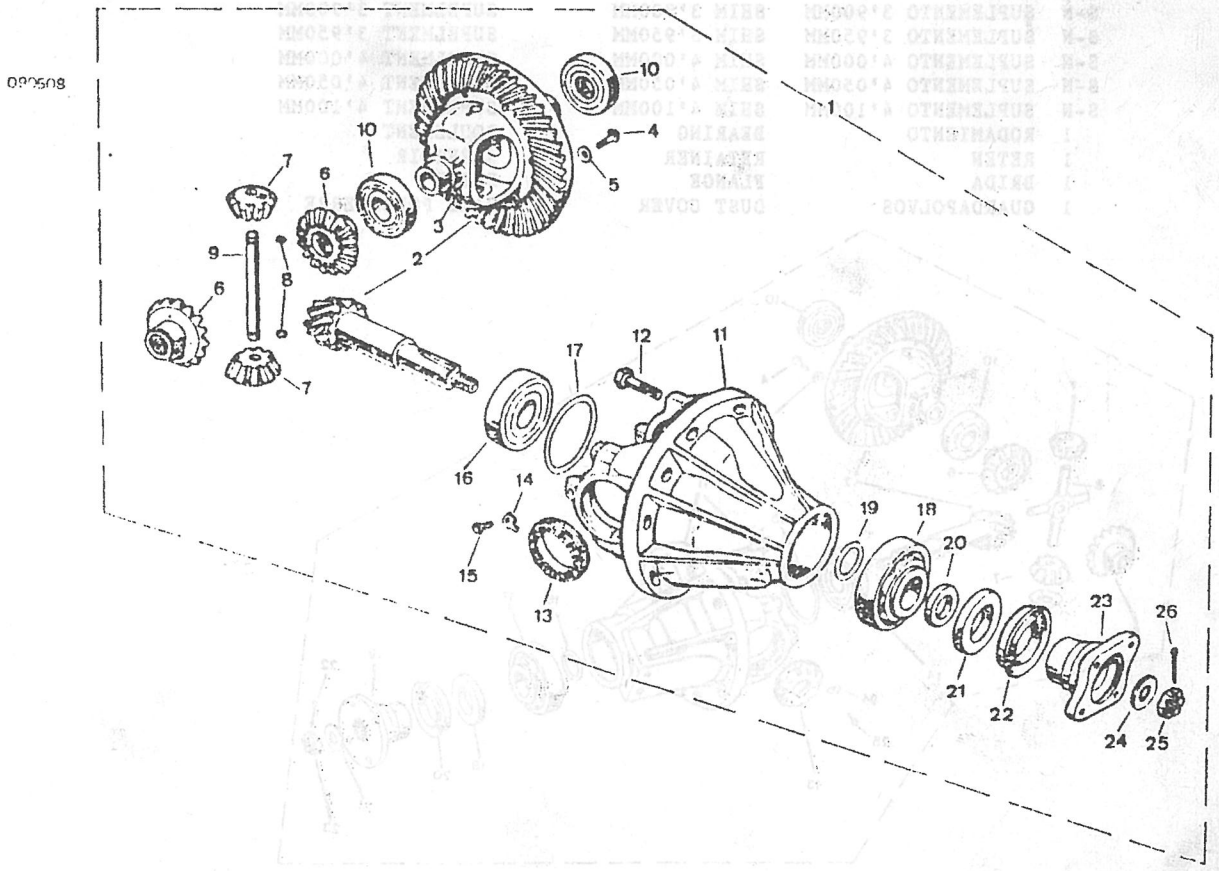

PUBLICACION N:790776 GRUPO=09 EJES DE RUEDA SUBGRUPO=DIFERENCIAL TRASERO
EDICION N: 1 GROUP=09 AXLES AND PROPELL SUBGROUP=REAR DIFERENTIAL
GROUPE=09 PONTS ET ARBRE TR SUBGROUPE=DIFFERENTIEL ARRIERE

N.FIG PLATE N.FIG	N.PIEZA PARTNUMBER N.PIECE	CAN QTY OUT	DENOMINACION	DESCRIPTION	DENOMINATION	OBSERVACIONES
1	137528	1	CONJ DIFERENCI 47 10	DIFERENTIAL AS 47 10	ENS DE DIFRERE 47 10	2500 L
2	718331	1	CORONA Y PI\ON 47:10	CROWN WHEELAND 47:10	COURONNE ET PI 47:10	
3	718079	1	CAJA DE SATELITES	DIFFERENTIAL CASSING	PORTE SATELLITE	
4	712298	12	TORNILLO	BOLT	BOULON	
5	712240	12	ARADELA	WASHER	RONDELLE	
6	120692	2	PLANETARIO	DIFFERENTIAL WHED	PIGNON PLANETAIRE	
7	712303	4	SATELITE	DIFFERENTIAL PINION	PIGNON SATELLITE	
8	130732	1	EJE SATELITES	SPINOLE FOR PINION	AXE DE SATELLITES	
9	712300	4	ARANDELA	WASHER	RONDELLE	
10	712238	2	RODAMIENTO	BEARING	COUSSINET	
11	718602	1	CARTER DIFERENCIAL	BEVEL PINION HOUSING	CARTER DE DIFFERENCI	
12	183281	4	TORNILLO	BOLT	BOULON	
13	712234	2	TUERCA	NUT	ECROU	
14	712236	1	RODAMIENTO	BEARING	ROULEMENT	
15	712173	S-N	SUPLEMENTO 0'965MM	SHIM 0'965MM	SUPELMENT 0'965MM	
	712175	S-N	SUPLEMENTO 1'016MM	SHIM 1'016MM	SUPELMENT 1'016MM	
	712177	S-N	SUPLEMENTO 1'067MM	SHIM 1'067MM	SUPELMENT 1'167MM	
	712179	S-N	SUPLEMENTO 1'118MM	SHIM 1'118MM	SUPELMENT 1'118MM	
	712181	S-N	SUPLEMENTO 1'169MM	SHIM 1'169MM	SUPELMENT 1'169MM	
	712183	S-N	SUPLEMENTO 1'219MM	SHIM 1'219MM	SUPELMENT 1'219MM	
	712185	S-N	SUPLEMENTO 1'270MM	SHIM 1'270MM	SUPELMENT 1'270MM	
	712187	S-N	SUPLEMENTO 1'321MM	SHIM 1'321MM	SUPELMENT 1'321MM	
	712189	S-N	SUPLEMENTO 1'372MM	SHIM 1'372MM	SUPELMENT 1'372MM	
	712191	S-N	SUPLEMENTO 1'422MM	SHIM 1'422MM	SUPELMENT 1'722MM	
	712193	S-N	SUPLEMENTO 1'472MM	SHIM 1'472MM	SUPELMENT 1'472MM	
16	712945	S-N	SUPLEMENTO 1'400MM	SHIM 1'400MM	SUPELMENT 1'400MM	
	712947	S-N	SUPLEMENTO 3'450MM	SHIM3'450MM	SUPELMENT 3'450MM	
	712949	S-N	SUPLEMENTO 3'500MM	SHIM 3'500MM	SUPELMENT 3'500MM	
	712951	S-N	SUPLEMENTO 3'550MM	SHIM 3'550MM	SUPELMENT 3'550MM	
	712953	S-N	SUPLEMENTO 3'600MM	SHIM 3'600MM	SUPELMENT 3'600MM	
	712955	S-N	SUPLEMENTO 3'650MM	SHIM 3'665MM	SUPELMENT 3'650MM	
	712957	S-N	SUPLEMENTO 3'700MM	SHIM 3'700MM	SUPELMENT 3'700MM	
	712959	S-N	SUPLEMENTO 3'750MM	SHIM 3'750MM	SUPELMENT 3'750MM	
	712961	S-N	SUPLEMENTO 3'800MM	SHIM 3'800MM	SUPELMENT 3'800MM	
	712963	S-N	SUPLEMENTO 3'850MM	SHIM 3'850MM	SUPELMENT 3'850MM	
	712965	S-N	SUPLEMENTO 3'900MM	SHIM 3'900MM	SUPELMENT 3'900MM	
	712967	S-N	SUPLEMENTO 3'950MM	SHIM 3'950MM	SUPELMENT 3'950MM	
	712969	S-N	SUPLEMENTO 4'000MM	SHIM 4'000MM	SUPELMENT 4'000MM	
	712971	S-N	SUPLEMENTO 4'050MM	SHIM 4'050MM	SUPELMENT 4'050MM	
	712973	S-N	SUPLEMENTO 4'100MM	SHIM 4'100MM	SUPELMENT 4'100MM	
17	712237	1	RODAMIENTO	BEARING	ROULEMENT	
18	236305	1	RETEN	RETAINER	ARRETOIR	
19	712111	1	BRIDA	FLANGE	BRIDE	
20	712230	1	GUARDAPOLVOS	DUST COVER	PARE POUSSIERRE	

090571

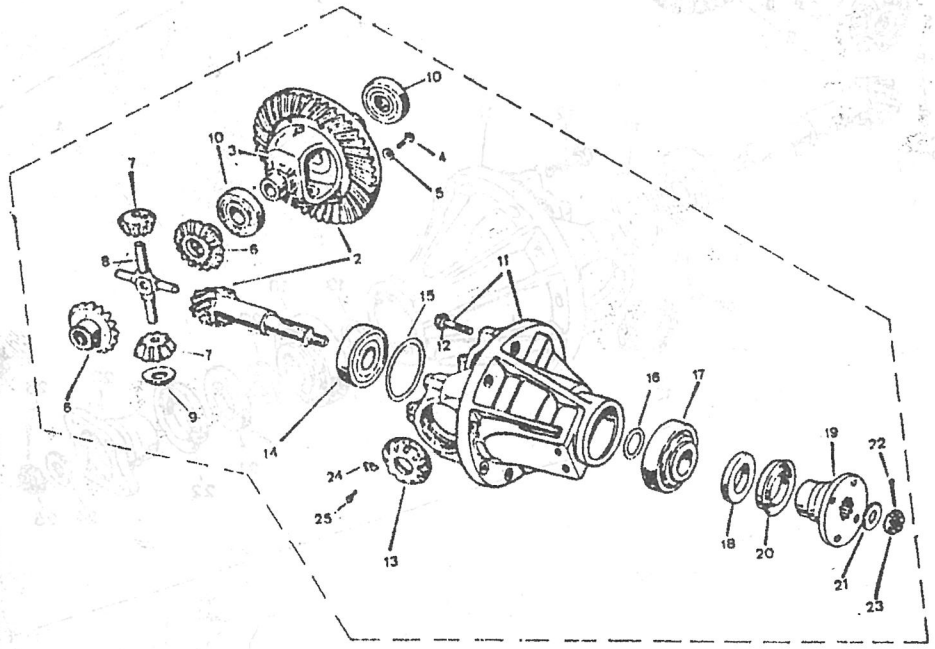

PUBLICACION N:790776 GRUPO=09 EJES DE RUEDA SUBGRUPO=DIFERENCIAL TRASERO
EDICION N: 1 GROUP=09 AXLES AND PROPELL SUBGROUP=REAR DIFERENTIAL
GROUPE=09 PONTS ET ARBRE TR SUBGROUPE=DIFFERENTIEL ARRIERE

N.FIG PLATE N.FIG	N.PIEZA PARTNUMBER N.PIECE	CAN QTY OUT	DENOMINACION	DESCRIPTION	DENOMINATION	OBSERVACIONES
21	712229	1	ARANDELA	WASHER	RONDELLE	
22	181337	1	PASADOR	PIN	GOUPILLE	
23	183232	1	TUERCA	NUT	ECROU	
24	713104	2	U/A	LOCKTAB	CRABOT	
25	189468	2	TORNILLO	BOLT	BOULON	

090571

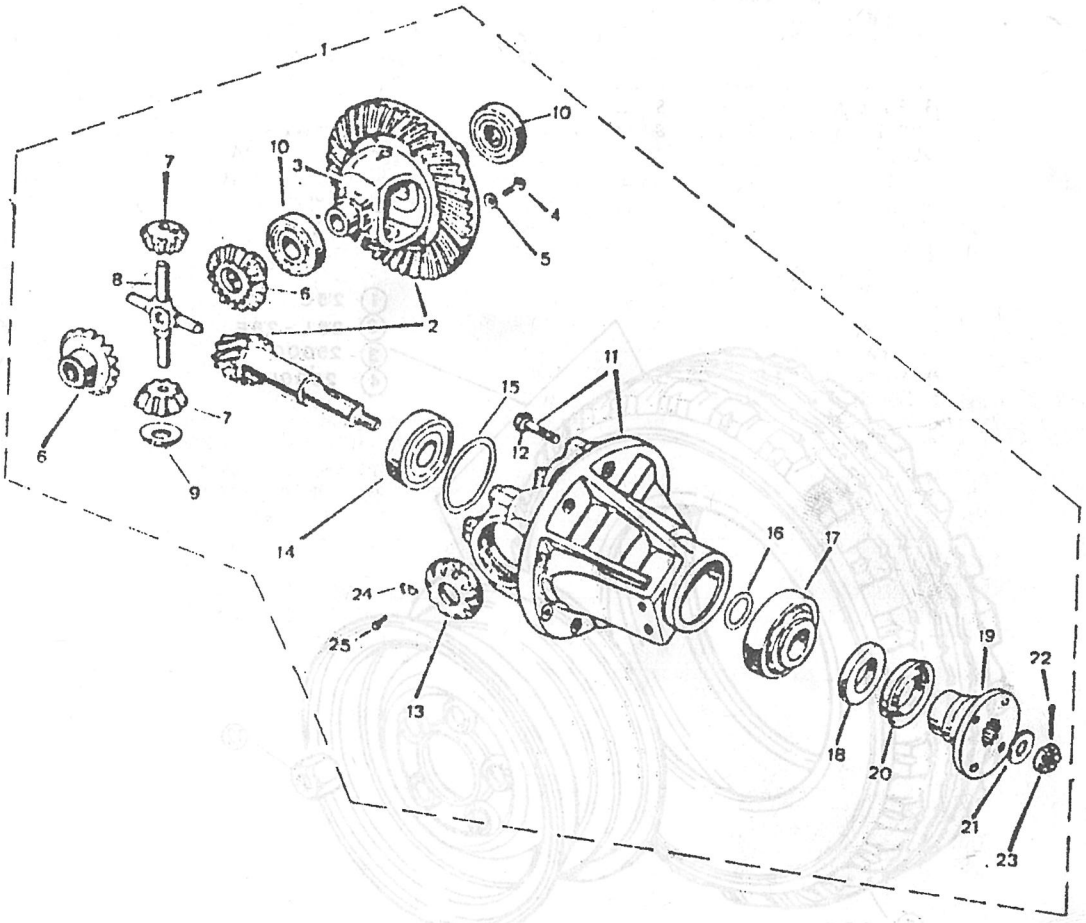

PUBLICACION N:790776 GRUPO=09 EJES DE RUEDA SUBGRUPO=RUEDAS
EDICION N: 1 GROUP=09 AXLES AND PROPELL SUBGROUP=WHEELS
GROUPE=09 PONTS ET ARBRE TR SUBGROUPE=ROUES

N.FIG PLATE N.FIG	N.PIEZA PARTNUMBER N.PIECE	CAN QTY OUT	DENOMINACION	DESCRIPTION	DENOMINATION	OBSERVACIONES
1	169937	5	CONJ RUEDA	WHEEL ASSY	ENS DE ROUE	
2	165907	5	CONJ RUEDA	WHEEL ASSY	ENS DE ROUE	
3	165920	5	CONJ.RUEDA	WHEEL ASSY	ENS DE ROUE	
4	165921	5	CONJ.RUEDA	WHEEL ASSY	ENS DE ROUE	
5	165900	5	CUBIERTA 600-16	TYRE 600-16	PNEU 600-16	2'5 C
6	165901	5	CUBIERTA 205R-16	TYRE 205R-16	PNEU 205R-16	2500 C
7	165903	5	CUBIERTA 750R-16	TYRE 750R-16	PNEU 750R-16	2.5 L-2.5 E-2500
8	231601E1	5	DISCO 5.00-16	DISC 5.00-16	VOILE 5.00-16	2.5 C
9	272309F2	5	DISCO 5.50 F16-H2	DISC 5.50 F16-H2	VOILE 5.50 F16-H2	2.5 L-2.5 E
* 10	164924	5	DISCO 6 1/2L-16H STY	DISC 6 1/2L-16H STYL	VOILE 6 1/2L-16H STY	2500 C-2500 L
11	165916	5	DISCO REFORZADO	DISC	VOILE	
12	577473	20	TUERCA DE RUEDA	WHEEL NUT	ECROU DE ROUE	

090615

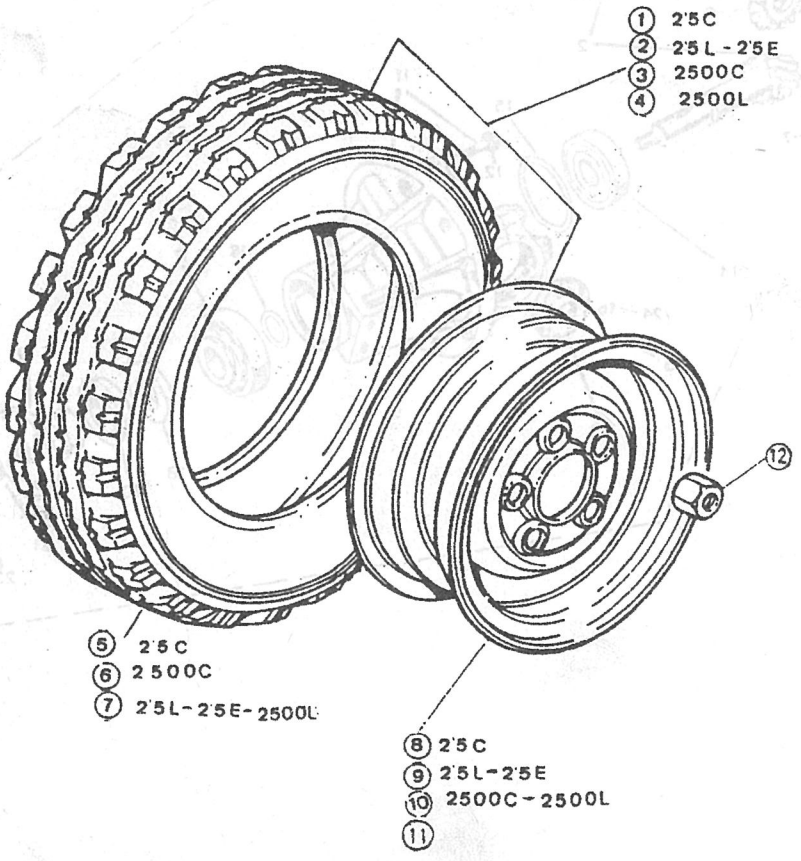

GRUPO 10 10 DIRECCION

GROUP 10 10 STEERING COLUMN

GROUP 10 10 DIRECTION

COMPOSICION.....COMPOSITION.....COMPOSICION

REFERENCIA PARTNUMBER NUM.PIECE	DENOMINACION	DESCRIPTION	DENOMINATION
100101	DIRECCION	STEERING COLUMN	DIRECTION
100110	DIRECCION	STEERING COLUMN	DIRECTION
100112	BOMBA DIRECCION	STEERING PUMP	POMPE DE DIRECTION
100115	CAJA DIRECCION	STEERING BOX	BOITE DE DIRECTION
1001151	CAJA DE DIRECCION	STEERING BOX	BOITE DE DIRECTION
100116	CAJA DIRECCION	STEERING BOX	BOITE DE DIRECTION
1001161	CAJA DIRECCION	STEERING BOX	BOITE DE DIRECTION
100309	SOPORTE CAJA DIRECCI	STEERING BOX BRACKET	SUPPORT BOITE DIRECC
100416	SOPORTE COLUMNA DIRE	STEERING COLUMN BRAC	SUPPORT CYLONE DIREC
100512	UNIDAD COMPENSADORA	STEERING REALY AND	RENVOI ET TIMONERIE

GRUPO 10 10 DIRECCION

GROUP 10 10 STEERING COLUMN

GROUPE 10 10 DIRECTION

COMPOSICION.....COMPOSITION.....COMPOSICION

REFERENCIA PARTNUMBER NOM.PIECE	DENOMINACION	DESCRIPTION	DENOMINATION
100131	DIRECCION	STEERING COLUMN	DIRECTION
100110	DIRECCION	STEERING COLUMN	DIRECTION
100132	BOMBA DIRECCION	STEERING PUMP	POMPE DE DIRECTION
100115	CAJA DIRECCION	STEERING BOX	BOITE DE DIRECTION
100151	CAJA DE DIRECCION	STEERING BOX	BOITE DE DIRECTION
100116	CAJA DIRECCION	STEERING BOX	BOITE DE DIRECTION
100161	CAJA DIRECCION	STEERING BOX	BOITE DE DIRECTION
100509	SOPORTE CAJA DIRECCI	STEERING BOX BRACKET	SUPPORT BOITE DIREC
100418	SOPORTE COLUMNA DIRE	STEERING COLUMN BRAC	SUPPORT COLONE DIREC
100512	UNIDAD CONVERSADORA	STEERING RELAY ASS	RELAYOT ET TIMONERIE

PUBLICACION: 1407/6 EDIC = 1

PUBLICACION N:790776 GRUPO=10 DIRECCION SUBGRUPO=DIRECCION (DIRECCION MECANICA)
EDICION N: 1 GROUP=10 STEERING COLUMN SUBGROUP=STEERING COLUMN
GROUPE=10 DIRECTION SUBGROUPE=DIRECTION

N.FIG PLATE N.FIG	N.PIEZA PARTNUMBER N.PIECE	CAN QTY OUT	DENOMINACION	DESCRIPTION	DENOMINATION	OBSERVACIONES
1	165137	1	CONJ.DIRECCION	STEERING UNIT ASSY	ENS DE LA DIRECTION	DIRECCION MECANI
2	790426	1	TUBO	CUTER COLUMN	TUBE FOURREAU	
3	607986	8	TORNILLO	BOLT	BOULON	
4	271379	S-N	JUNTA	JOINT	JOINT	
5	790147	1	ARANDELA	WASHER	RONDELLE	
6	790146	1	CASQUILLO DE GOMA	RUBBER BUSH	BAGUE DE CAOUTCHOUC	
7	271384	2	PISTA	TRACK	PISTE DE ROULEMENT	
8	193793	20	BOLA 9/32"	BALL 9/32"	BILLE 9/32"	
9	261865	1	TUERCA	NUT	ECROU	
10	607967	12	BOLA 3/8"	BALL 3/8"	BILLE 3/8"	
11	261869	1	RODILLO	ROLLER BEARING	ROULEMENT	
12	790427	1	COLUMNA DIRECCION	STEERING COLUMN	LEVIER DE DIRECTION	
13	261873	1	TORNILLO	BOLT	BOULON	
14	261874	1	TUERCA	NUT	ECROU	
15	607993	4	TORNILLO	BOLT	BOULON	
16	515848	1	TAPA	COVER	COUVERCLE	
17	271372	1	BIELETA	STEERING ARM	LEVIER DE DIRECTION	
18	515849	1	JUNTA	JOINT	JOINT	
19	166338	1	TAPON	PLUG	BOUCHON	
20	607966	1	CAJA DIRECCION	STEERING BOX	BOITE DE DIRECTION	
21	261858	S-N	SUPLEMENTO 0.010	SHIM 0.010	SUPPLEMENT 0.010	
	271379	S-N	SUPLEMENTO 0.002	SHIM 0.002	SUPPLEMENT 0.002	
	521522	S-N	SUPLEMENTO 0.001	SHIM 0.001	SUPPLEMENT 0.001	
22	605508	1	TAPA	COVER	COUVERCLE	
23	261850	1	CASQUILLO	BUSH	BAGUE	
24	271013	1	ANILLO	RING	ANNEAU	
25	4115	1	ARANDELA	WASHER	RONDELLE	
26	254877	1	TUERCA	NUT	ECROU	
27	552804	1	TUERCA	NUT	ECROU	
28	182184	2	TORNILLO	BOLT	BOULON	
29	189474	2	ARANDELA MUELLE	SPRING WASHER	RONDELLE RESSORT	
30	184259	1	ARANDELA	WASHER	RONDELLE	
31	NRC3411F1	1	TAPA	COVER	COUVERCLE	
32	NRC4346	1	VOLANTE	STEERING WHEEL	VOLANT	
33	166666	1	GOLPEADOR	STRIKER ASSY	AMORTISSEUR	
34	250009	1	TORNILLO	BOLT	BOULON	
35	184243	3	TORNILLO	BOLT	BOULON	
36	595123	1	BIELETA	STEERIN ARM	LEVIER DE DIRECTION	

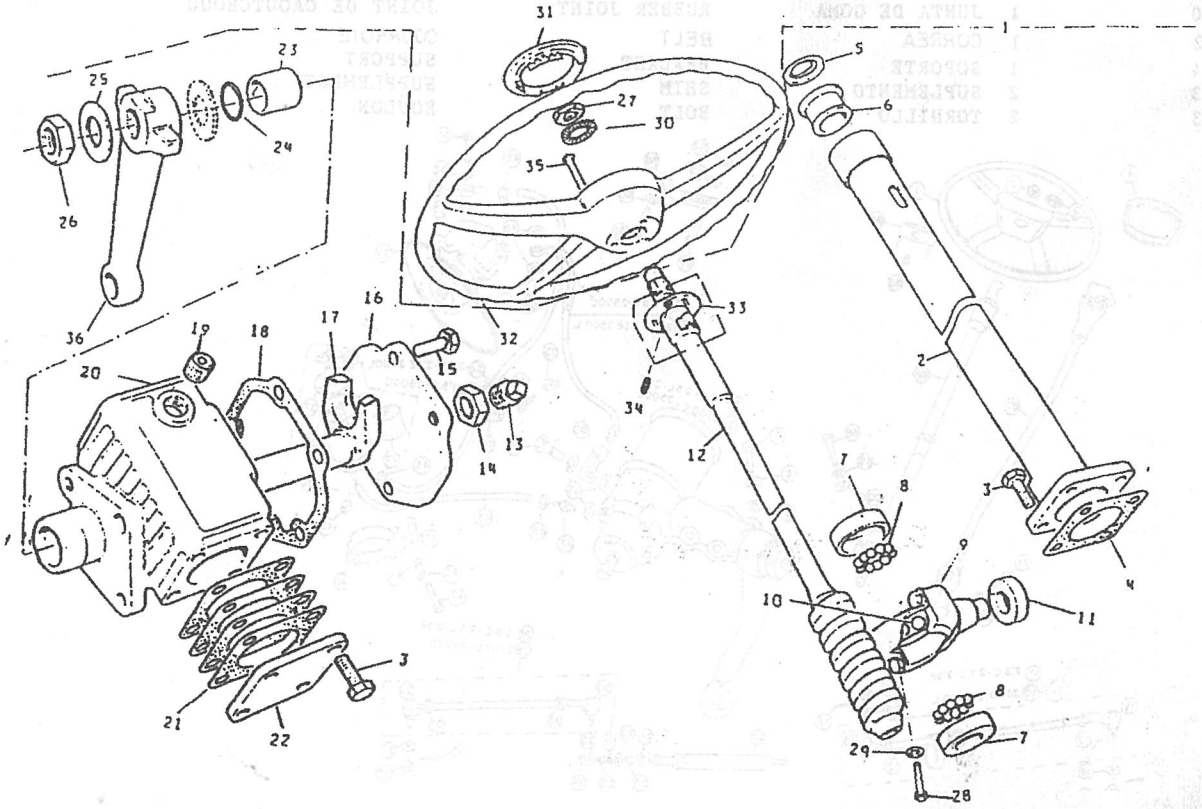

PUBLICACION N:790776 GRUPO-10 DIRECCION SUBGRUPO-DIRECCION
EDICION N: 1 GROUP-10 STEERING COLUMN SUBGROUP-STEERING COLUMN
GROUPE-10 DIRECTION SUBGROUPE-DIRECTION

N.FIG PLATE N.FIG	N.PIEZA PARTNUMBER N.PIECE	CAN QTY OUT	DENOMINACION	DESCRIPTION	DENOMINATION	OBSERVACIONES
1	176236	1	VOLANTE	STEERING WHEEL	VOLANT	
2	185240	1	TUERCA	NUT	ECROU	
3	184259	1	FIADOR	CATCH	ATTACHE	
4	176220	1	TAPA	COVER	COUVERCLE	
5	165396	1	CAJA DE DIRECCION	STEERING BOX	BOITTE DE DIRECTION	D CHASIS-123415
	166070	1	CAJA DE DIRECION	STEERING BOX	BOITTE DE DIRECTION	H CHASIS 123414
6	165397	1	CAJA DE DIRECION	STEERING BOX	BOITTE DE DIRECTION	D CHASIS-123441
	175296	1	CAJA DE DIRECION	STEERING BOX	BOITTE DE DIRECTION	H CHASIS-123440
7	185205	2	TORNILLO	BOLT	BOULON	
	185206	2	TORNILLO	BOLT	BOULON	
8	810002	4	ARANDELA MUELLE	SPRING WASHER	RONDELLE RESSORT	
9	09160-12055	4	ARANDELA PLANA	PLAIN WASHER	RONDELLE PLANE	
10	165102	1	BARRA DE MANDO	STEERING TRANCK ROD	BARRE DE CONEXION	2500 C-2500 L
11	169185	1	BARRA DE MANDO	STEERING TRANCK ROD	BARRE DE CONEXION	2'5 C-2'5 L-2'5 E
12	712678	1	TUERCA	NUT	ECROU	
13	162111	2	TUERCA	NUT	ECROU	
14	169107	1	ROTULA L/D	BALL JOINT RH	ROTULA PASSE CD	
15	169105	1	ROTULA L/I	BALL JOINT LH	ROTULA PASSE CG	
16	853775	2	TUERCA	NUT	ECROU	
17	852467	2	PASADOR	PIN	GOUPILLE	
18	4171	1	ARANDELA PLANA	PLAIN WASHER	RONDELLE PLANE	
19	850425	1	ARANDELA PLANA	PLAIN WASHER	RONDELLE PLANE	
20	175297	1	AMORTIGUADOR	SHOCK ABSORBER	AMORTISSEUR	
21	40028-00000	4	ARANDELA	WASHER	RONDELLE	
22	165119	4	GOMA	RUBBER	CAOUTCHOUC	
23	40027-00000	4	ARANDELA	WASHER	RONDELLE	
24	40029-00000	2	TUERCA	NUT	ECROU	
25	165101	1	BARRA DE MANDO	STEERING TRANCK ROD	BARRE DE CONEXION	2500 C-2500 L
26	168170	1	BARRA DE MANDO	STEERING TRANCK ROD	BARRE DE CONEXION	2'5 C-2'5 L-2'5 E
27	162111	1	TUERCA	NUT	ECROU	
28	712678	1	TUERCA	NUT	ECROU	
29	169107	1	ROTULA L/D	BALL JOINT RH	ROTULA PASSE CD	
30	169106	1	ROTULA L/I	BALL JOINT LH	ROTULA PASSE CG	
31	850425	2	ARANDELA PLANA	PLAIN WASHER	RONDELLE PLANE	
32	853775	2	TUERCA	NUT	ECROU	
33	852467	2	PASADOR	PIN	GOUPILLE	
34	169172	1	DEPOSITO DE ACEITE	OIL TANK	RESERVOIR DE HUILE	
35	193832	1	CARTUCHO DE FILTRO	FILTER UNIT	CARTOUCHE DE FILTRE	
36	193831	1	TUERCA DE MARIPOSA	BUTTERFLY NUT	ECROU DE PAPILLON	
37	194532	1	TAPA	COVER	COUVERCLE	
38	193830	1	JUNTA DE GOMA	RUBBER JOINT	JOINT DE CAOUTCHOUC	
39	181682	1	CORREA	BELT	COURROIE	
40	169134	1	SOPORTE	BRACKET	SUPPORT	
41	163123	2	SUPLEMENTO	SHIM	SUPPLEMENT	
42	182113	2	TORNILLO	BOLT	BOULON	

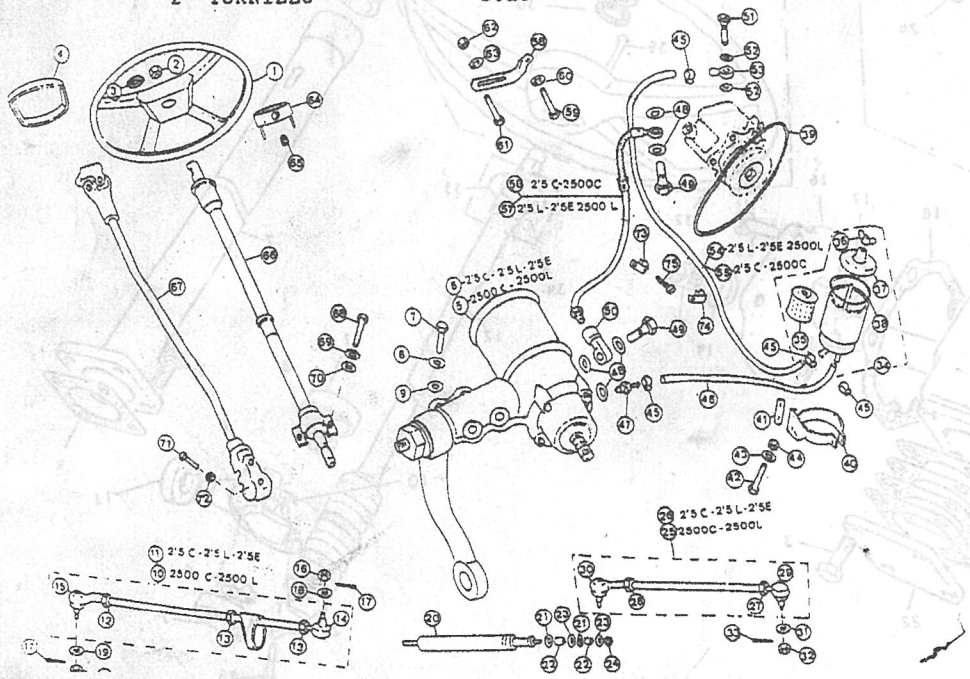

PUBLICACION N:790776 GRUPO=10 DIRECCION SUBGRUPO=DIRECCION
EDICION N: 1 GROUP=10 STEERING COLUMN SUBGROUP=STEERING COLUMN
GROUPE=10 DIRECTION SUBGROUPE=DIRECTION

N.FIG PLATE N.FIG	N.PIEZA PARTNUMBER N.PIECE	CAN QTY OUT	DENOMINACION	DESCRIPTION	DENOMINATION	OBSERVACIONES
43	3074	2	ARANDELA MUELLE	SPRING WASHER	RONDELLE RESSORT	
44	181184	2	TUERCA	NUT	ECROU	
45	G04137	4	ABRAZADERA	CLAMP	ETRIER	
46	165132	1	TUBO 185 MM	PIPE 185 MM	TUYAU 185 MM	
47	165131	1	RACORD	RACORD	RACCORD	
48	185201	5	ARANDELA	WASHER	RONDELLE	
49	164173	2	TORNILLO RACORD	RACORD BOLT	BOULON RACCORD	
50	164144	1	RACORD	RACORD	RACCORD	
51	163117	1	TORNILLO RACORD	RACORD BOLT	BOULON RACCORD	
52	185202	2	ARANDELA	WASHER	RONDELLE	
53	164167	1	RACORD	RACORD	RACCORD	
54	165177	1	TUBERIA	PIPE	TUYAU	2'5 L-2'5 E-2500L
55	165176	1	TUBERIA	PIPE	TUYAU	2'5 C-2500 C
56	164160	1	TUBERIA	PIPE	TUYAU	2'5 C-2500 C
57	164168	1	TUBERIA	PIPE	TUYAU	2'5 L-2'5 E-2500L
58	164137	1	TENSOR	TIGHTENER	TENDEUR	
59	BH108135	1	TORNILLO	BOLT	BOULON	
60	WL108001	1	ARANDELA MUELLE	SPRING WASHER	RONDELLE RESSORT	
61	BH110141	1	TORNILLO	BOLT	BOULON	
62	810503	1	TUERCA	NUT	ECROU	
63	185237	1	ARANDELA PLANA	PLAIN WASHER	RONDELLE PLANE	
64	166666	1	GOLPEADOR	BEATER	FRAPPEUR	
65	250009	1	TORNILLO	BOLT	BOULON	
66	175277	1	COLUMNA DIRECCION	STEERING COLUMN	PYLONE DE DIRECTION	
67	165398	1	EJE INFERIOR DIRECCI	INF.STEERING AXLE	AXE INFERIEUR DIREC.	D CHASIS-123415/41
	175273	1	EJE INFERIOR DIRECCI	INF.STEERING AXLE	AXE INFERIEUR DIREC.	H CHASIS-123414/40
68	SH108201	2	TORNILLO	BOLT	BOULON	
69	WM108001	2	ARANDELA MUELLE	SPRING WASHER	RONDELLE RESSORT	
70	587405	2	ARANDELA PLANA	PLAIN WASHER	RONDELLE PLANE	
71	BX108301	2	TORNILLO	BOLT	BOULON	
72	NY108041	2	TUERCA	NUT	ECROU	
73	8885	1	CLIP	CLIP	CLIP	
74	56666	2	CLIP	CLIP	CLIP	
75	78227	3	TORNILLO	BOLT	BOULON	

100110

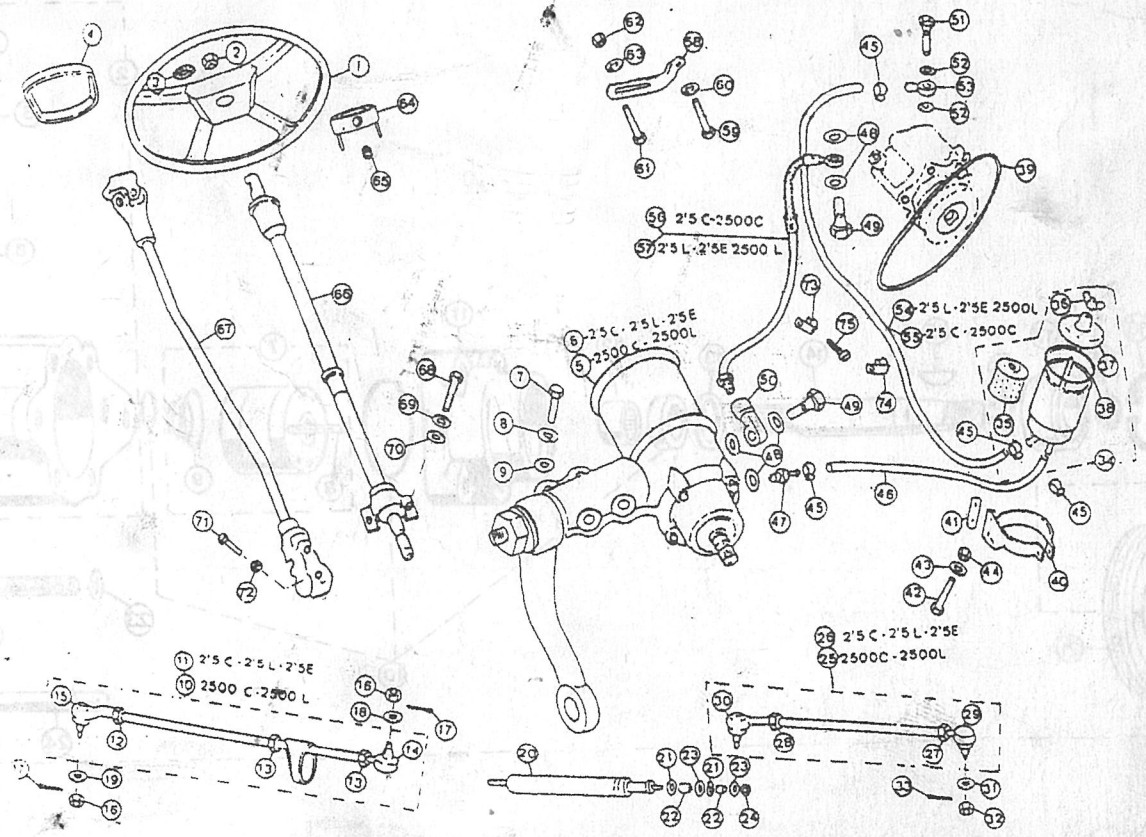

PUBLICACION N:790776 GRUPO=10 DIRECCION SUBGRUPO=BOMBA DIRECCION
EDICION N: 1 GROUP=10 STEERING COLUMN SUBGROUP=STEERING PUMP
GROUPE=10 DIRECTION SUBGROUPE=POMPE DE DIRECTION

N.FIG PLATE N.FIG	N.PIEZA PARTNUMBER N.PIECE	CAN QTY OUT	DENOMINACION	DESCRIPTION	DENOMINATION	OBSERVACIONES
1	164158	1	CONJ BOMBA	PUMP ASSY	ENS POMPE	
2	790826	1	CONJ.CUERPO BOMBA	PUMP BODY ASSY	ENSEMBLE CORPS POMPE	
3	790835	1	TAPON	PLUG	BOUCHON	
4	790836	1	PASADOR	PIN	CLAVETTE	
5	193826	1	ARANDELA JUNTA	JOINT WASHER	RONDELLE JOINT	
6	193824	1	MUELLE	SPRING	RESSORT	
7	790827	1	CONJ.ROTOR	ROTOR ASSY	ENSEMBLE ROTOR	
8	790833	2	PASADOR	PIN	CLAVETTE	
9	790834	1	MUELLE	SPRING	RESSORT	
10	790840	1	JUEGO DE REPARACION	REPAIR SET	JEU DE REPARATION	
11	790832	1	TAPA	COVER	COUVERCLE	
12	790021	1	RODAMIENTO	BEARING	ROULEMENT	
13	790831	1	CIRCLIP	CIRCLIP	CIRCLIP	
14	790830	1	EJE	SHAFT	AXE	
15	790027	1	CHAVETA	KEY	CHAVETTE	
16	790829	2	CIRCLIP	CIRCLIP	CIRCLIP	
17	193818	1	RODAMIENTO	BEARING	ROULEMENT	
18	790828	1	CIRCLIP	CIRCLIP	CIRCLIP	
19	790030	1	FIADOR	LOCKER	ATTACHE	
20	193834	1	TUERCA	NUT	ECROU	
21	790032	1	POLEA	PULLEY	POULIE	
22	790838	3	TORNILLO	BOLT	BOULON	
23	790837	4	ARANDELA MUELLE	SPRING WASHER	RONDELLE RESSORT	
24	790839	1	TORNILLO	BOLT	BOULON	

100112

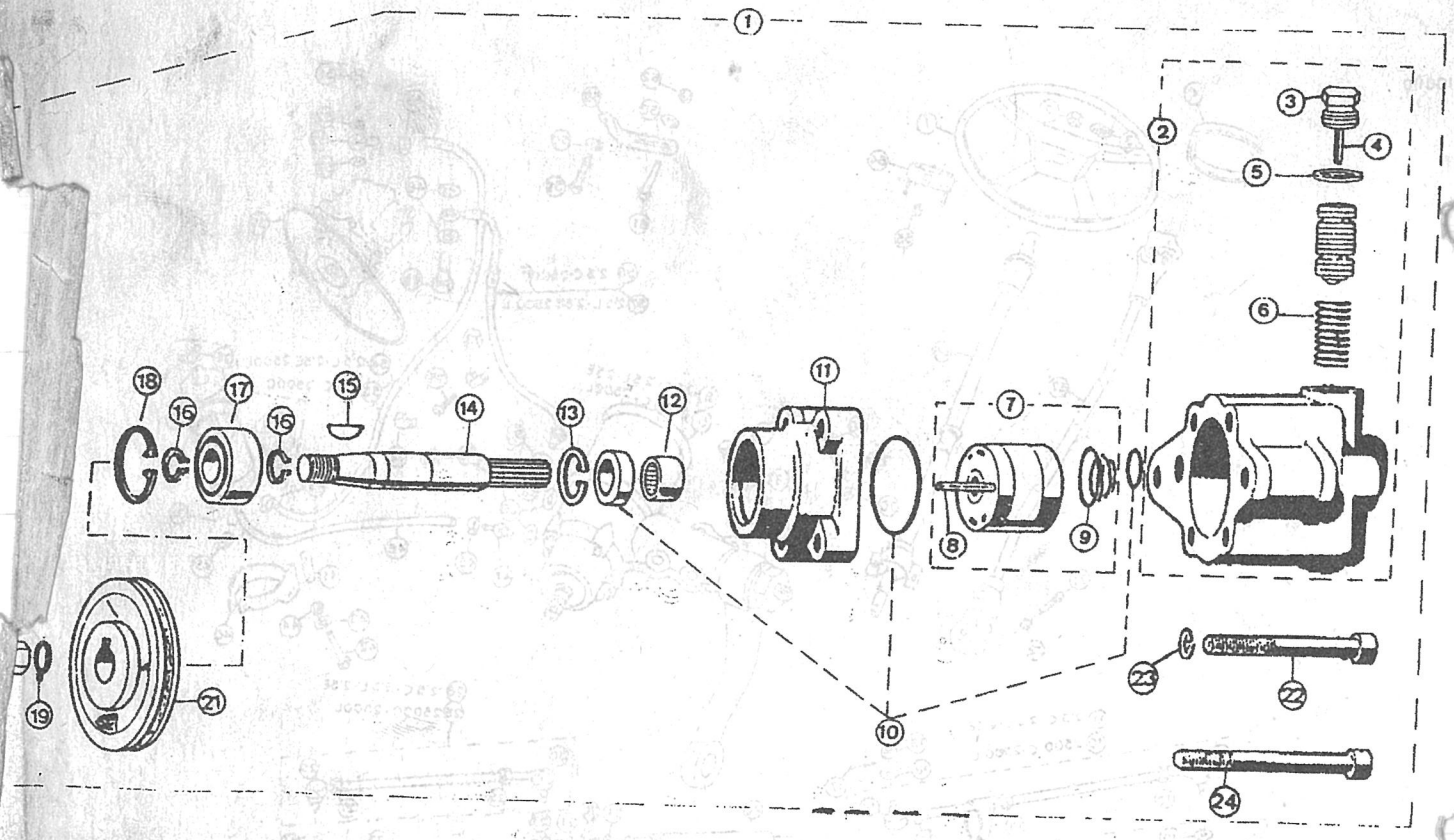

PUBLICACION N:790776 GRUPO=10 DIRECCION SUBGRUPO=CAJA DIRECCION
EDICION N: 1 GROUP=10 STEERING COLUMN SUBGROUP=STEERING BOX
GROUPE=10 DIRECTION SUBGROUPE=BOITE DE DIRECTION

N.FIG PLATE N.FIG	N.PIEZA PARTNUMBER N.PIECE	CAN QTY OUT	DENOMINACION	DESCRIPTION	DENOMINATION	OBSERVACIONES
1	166070	1	CAJA DE DIRECION	STEERING BOX	BOITTE DE DIRECTION	H CHASIS-123414
2	790267	1	TUERCA M26X1,5	NUT M26X1,5	ECROU M26X1,5	
3	790813	1	ARANDELA SEGURIDAD	CATCH	ATTACHE	
4	165107	1	BIELETA	STEERING DROP ARM	LEVIER DE DIRECTION	
5	790256	1	ANILLO ELASTICO	CIRCLIP	CIRCLIP	
6	790258	1	ANILLO	RING	ANNEAU	
7	790257	1	ARANDELA PLANA	PLAIN WASHER	RONDELLE PLANE	
8	790255	3	RODAMIENTO	BEARING	ROULEMENT	
9	790254	1	CARCASA DE CAJA DIRE	STEERING UNIT BOX	CARTER BOITE DE DIRE	
10	790265	1	HUSILLO	END LESS SAMFT	AXE SANS FIN	
11	790259	1	TAPA LATERAL	SIDE COVER	COUVERCLE LATERALE	
12	790262	1	TUERCA	NUT	ECROU	
13	790264	1	ENGRASADOR	GREASER	GRAISSEUR	
14	790260	4	TORNILLO	BOLT	BOULON	
15	790261	4	ARANDELA	WASHER	RONDELLE	
16	790263	1	PISTON-CAJA VALVULAS	PISTON-VALVE BOX	PISTON BOITE DE SOUP	
17	790270	4	TORNILLO	BOLT	BOULON	
18	790269	4	ARANDELA PLANA	PLAIN WASHER	RONDELLE PLANE	
19	790271	1	JUEGO DE JUNTAS	JOINT SET	JEU DE JOINTS	
20	790268	1	ANILLO ELASTICO	CIRCLIP	CIRCLIP	

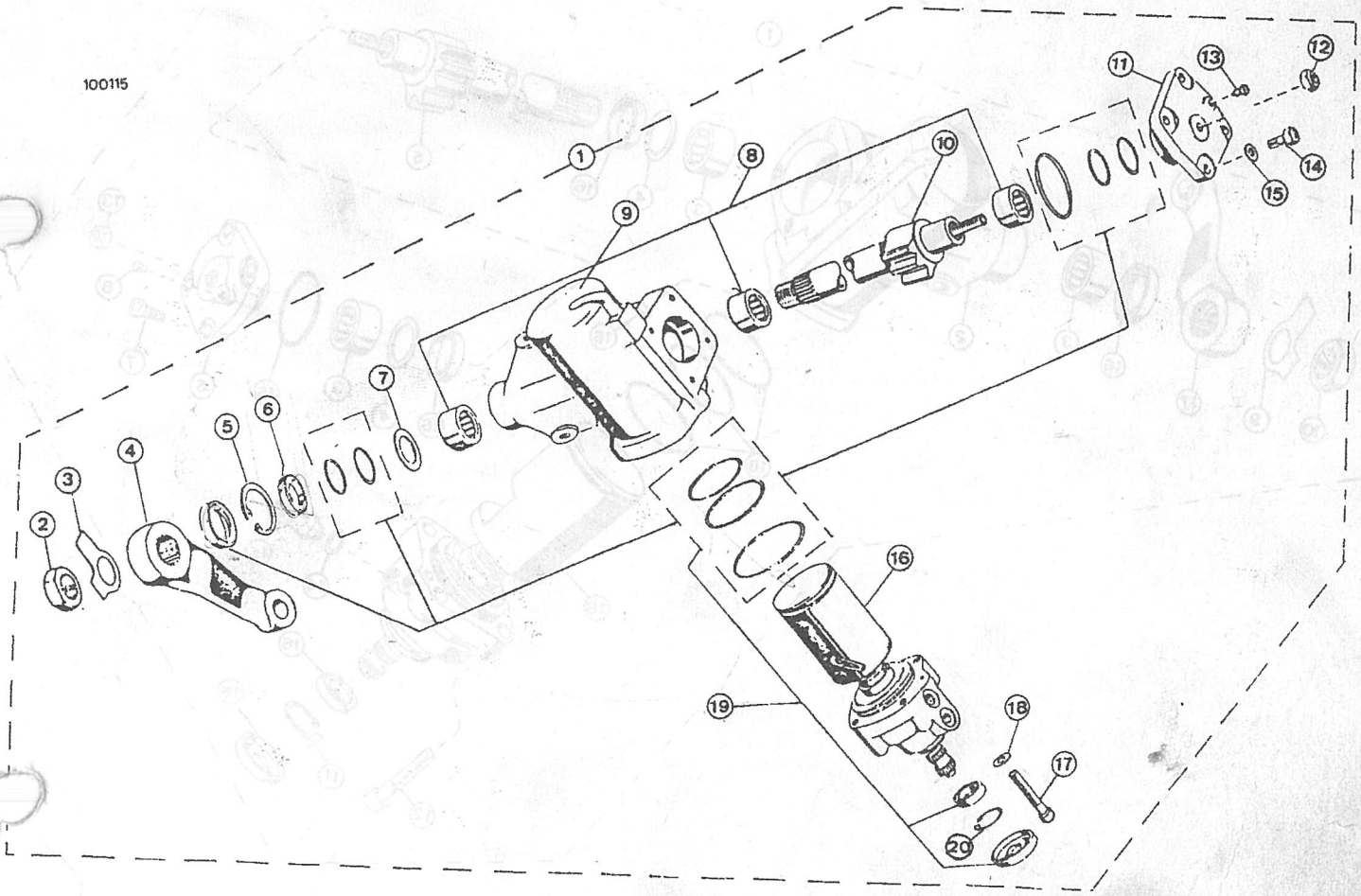

PUBLICACION N:790776 GRUPO=10 DIRECCION SUBGRUPO=CAJA DE DIRECCION
EDICION N: 1 GROUP=10 STEERING COLUMN SUBGROUP=STEERING BOX
GROUPE=10 DIRECTION SUBGROUPE=BOITE DE DIRECTION

N.FIG PLATE N.FIG	N.PIEZA PARTNUMBER N.PIECE	CAN QTY OUT	DENOMINACION	DESCRIPTION	DENOMINATION	OBSERVACIONES
1	165396	1	CAJA DE DIRECCION	STEERING BOX	BOITTE DE DIRECTION	D CHASIS-123415
2	790850	1	CARCASA CAJA DIRECCI	STEERING UNIT BOX	CARTER BOITE DE DIRE	
3	790255	3	RODAMIENTO	BEARING	ROULEMENT	
4	790851	2	ARANDELA	WASHER	RONDELLE	
5	790852	1	HUSILLO	END LESS SAMFT	AXE SANS FIN	
6	790853	1	TAPA LATERAL	SIDE COVER	COUVERCLE LATERALE	
7	790854	4	TORNILLO	BOLT	BOULON	
8	790855	1	TAPON	PLUG	BOUCHON	
9	790813	1	ARANDELA SEGURIDAD	CATCH	ATTACHE	
10	790267	1	TUERCA M26X1'5	NUT M26X1'5	ECROU M26X1'5	
11	790268	1	ANILLO ELASTICO	CIRCLIP	CIRCLIP	
12	790856	4	TORNILLO	BOLT	BOULON	
13	790857	1	TUERCA	NUT	ECROU	
14	790858	1	ARANDELA	WASHER	RONDELLE	
15	790859	1	RACORD	RACORD	RACORD	
16	790860	1	JUEGO DE JUNTAS	JOINT SET	JEU DE JOINT	
17	790861	1	BIELETA	STEERING DROP ARM	LEVIER DE DIRECTION	
18	790862	1	PISTON CAJA VALVULAS	PISTON VALVE BOX	PISTON BOITE DE SOUP	

1001151

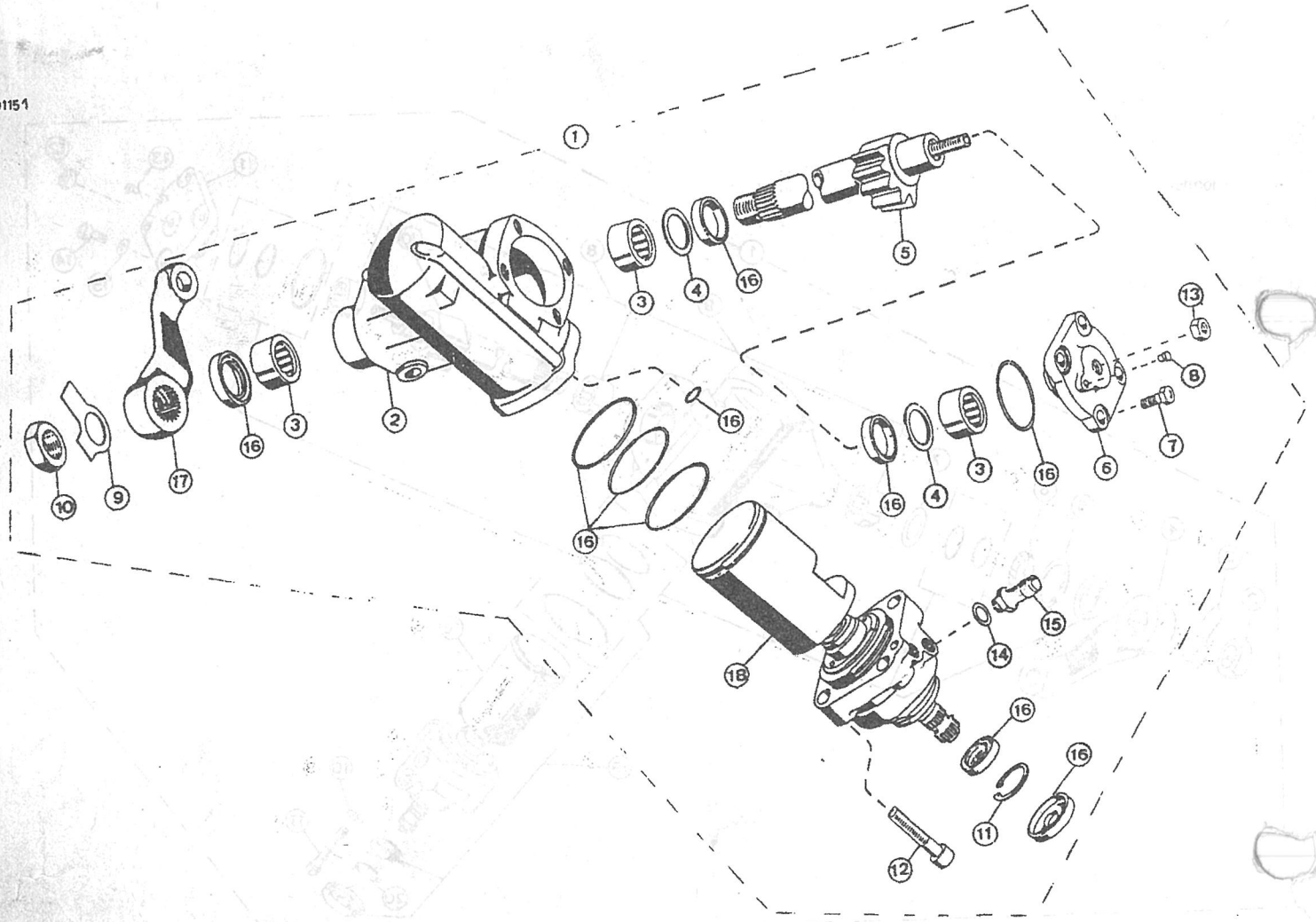

PUBLICACION N:790776 GRUPO=10 DIRECCION SUBGRUPO=CAJA DIRECCION
EDICION N: 1 GROUP=10 STEERING COLUMN SUBGROUP=STEERING BOX
GROUPE=10 DIRECTION SUBGROUPE=BOITE DE DIRECTION

N.FIG PLATE N.FIG	N.PIEZA PARTNUMBER N.PIECE	CAN QTY OUT	DENOMINACION	DESCRIPTION	DENOMINATION	OBSERVACIONES
1	175296	1	CAJA DE DIRECION	STEERING BOX	BOITTE DE DIRECTION	H CHASIS-123440
2	790267	1	TUERCA M26X1'5	NUT M26X1'5	ECROU M26X1'5	
3	790813	1	ARANDELA DE SEGURIDA	CATCH	ATTACHE	
4	790814	1	BIELETA	STEERING DROP ARM	LEVIER DE DIRECTION	
5	790256	1	ANILLO ELASTICO	CIRCLIP	CIRCLIP	
6	790258	1	ANILLO	RING	ANNEAU	
7	790257	1	ARANDELA PLANA	PLAIN WASHER	RONDELLE PLANE	
8	790255	3	RODAMIENTO	BEARING	ROULEMENT	
9	790815	1	CARCASA DE CAJA DIRE	STEERING UNIT BOX	CARTER BOITE DE DIRE	
10	790265	1	HUSILLO	END LESS SAMFT	AXE SANS FIN	
11	790259	1	TAPA LATERAL	SIDE COVER	COUVERCLE LATERALE	
12	790262	1	TUERCA	NUT	ECROU	
13	790264	1	ENGRASADOR	GREASER	GRAISSEUR	
14	790260	4	TORNILLO	BOLT	BOULON	
15	790261	4	ARANDELA	WASHER	RONDELLE	
16	790816	1	PISTON-CAJA VALVULAS	PISTON-VALVE BOX	PISTON BOITE DE SOUP	
17	790270	4	TORNILLO	BOLT	BOULON	
18	790269	4	ARANDELA PLANA	PLAIN WASHER	RONDELLE PLANE	
19	790271	S-N	JUEGO DE JUNTAS	JOINT SET	JEU DE JOINT	
20	790268	1	ANILLO ELASTICO	CIRCLIP	CIRCLIP	

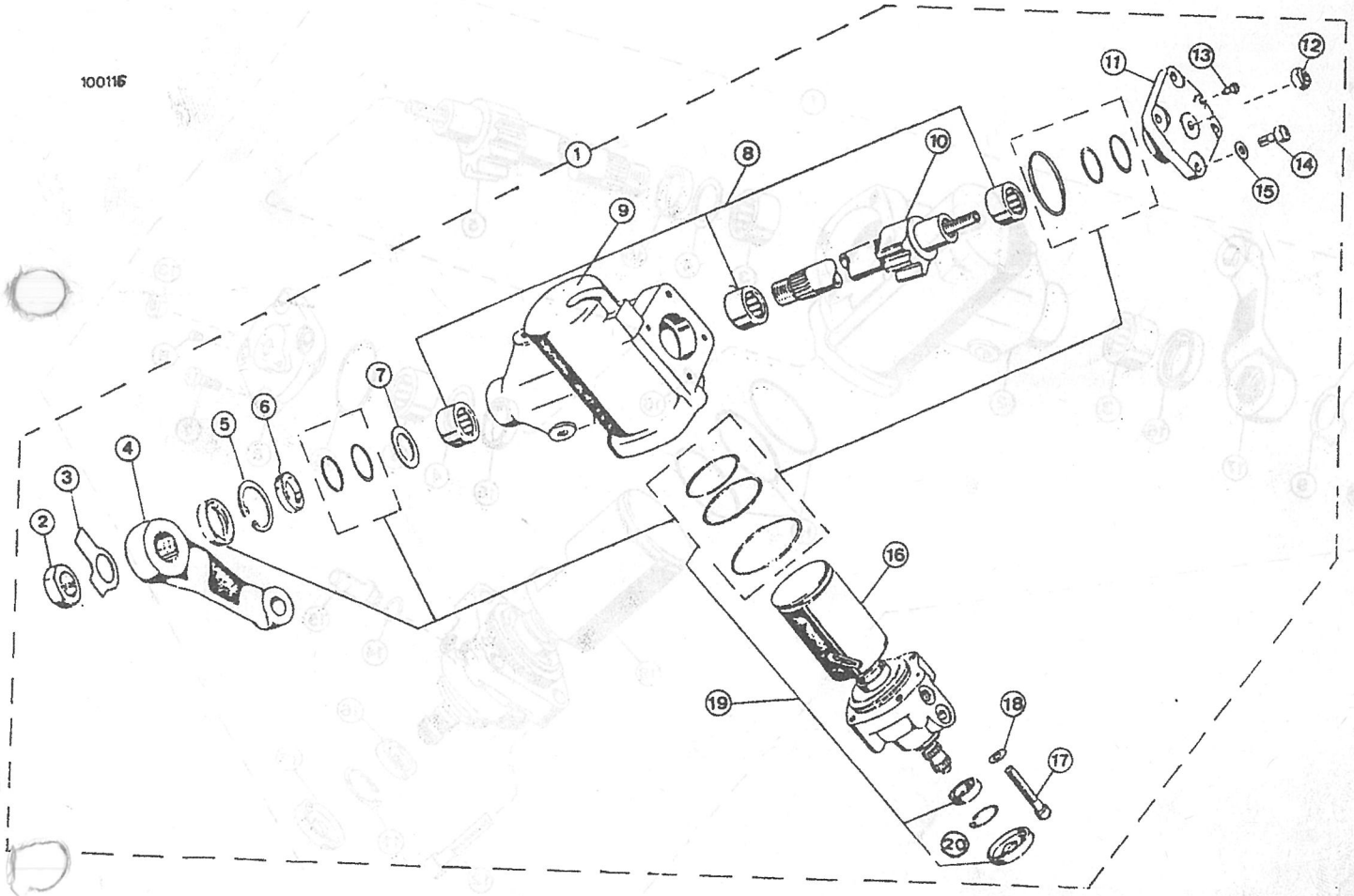

PUBLICACION N:790776 GRUPO=10 DIRECCION SUBGRUPO=CAJA DIRECCION
EDICION N: 1 GROUP=10 STEERING COLUMN SUBGROUP=STEERING BOX
GROUPE=10 DIRECTION SUBGROUPE=BOITE DE DIRECTION

N.FIG PLATE N.FIG	N.PIEZA PARTNUMBER N.PIECE	CAN QTY OUT	DENOMINACION	DESCRIPTION	DENOMINATION	OBSERVACIONES
1	165397	1	CAJA DE DIRECCION	STEERING BOX	BOITTE DE DIRECTION	D CHASIS-123441
2	790850	1	CARCASA CAJA DIRECCI	STEERING UNIT BOX	CARTER BOITE DE DIRE	
3	790255	3	RODAMIENTO	BEARING	ROULEMENT	
4	790851	2	ARANDELA	WASHER	RONDELLE	
5	790852	1	HUSILLO	END LESS SAMFT	AXE SANS FIN	
6	790853	1	TAPA LATERAL	SIDE COVER	COUVERCLE LATERALE	
7	790854	4	TORNILLO	BOLT	BOULON	
8	790855	1	TAPON	PLUG	BOUCHON	
9	790813	1	ARANDELA SEGURIDAD	CATCH	ATTACHE	
10	790267	1	TUERCA M26X1'5	NUT M26X1'5	ECROU M26X1'5	
11	790268	1	ANILLO ELASTICO	CIRCLIP	CIRCLIP	
12	790856	4	TORNILLO	BOLT	BOULON	
13	790857	1	TUERCA	NUT	ECROU	
14	790858	1	ARANDELA	WASHER	RONDELLE	
15	790859	1	RACORD	RACORD	RACORD	
16	790860	1	JUEGO DE JUNTAS	JOINT SET	JEU DE JOINT	
17	790814	1	BIELETA	STEERING DROP ARM	LEVIER DE DIRECTION	
18	790863	1	PISTON CAJA VALVULAS	PISTON VALVE BOX	PISTON BOITE DE SOUP	

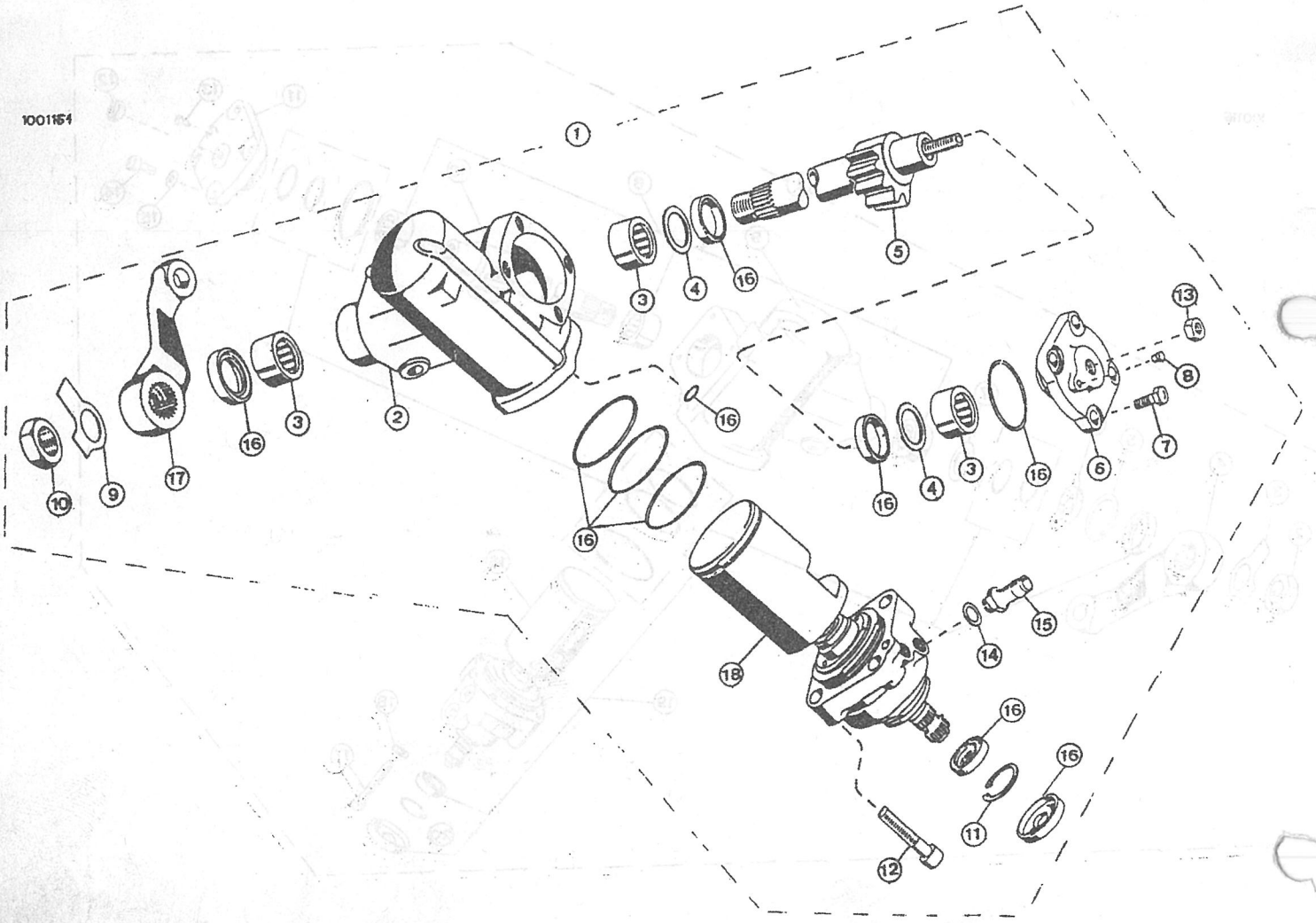

PUBLICACION N:790776 GRUPO=10 DIRECCION SUBGRUPO=SOPORTE CAJA DIRECCI
EDICION N: 1 GROUP=10 STEERING COLUMN SUBGROUP=STEERING BOX BRACKET
GROUPE=10 DIRECTION SUBGROUPE=SUPPORT BOITE DIRECC

N.FIG PLATE N.FIG	N.PIEZA PARTNUMBER N.PIECE	CAN QTY OUT	DENOMINACION	DESCRIPTION	DENOMINATION	OBSERVACIONES
1	169117	1	SOPORTE	SUPPORT	SUPPORT	PARA D.MECANICA
2	181184	2	TUERCA	NUT	ECROU	
3	163149	S-N	PLACA	PLATE	PLAQUE	
4	3840	2	ARANDELA PLANA	PLAIN WASHER	RONDELLE PLANE	
5	3074	2	ARANDELA MUELLE	SPRING WASHER	RONDELLE RESSORT	
6	255209	2	TORNILLO	BOLT	BOULON	
7	184217	6	TORNILLO	BOLT	BOULON	
8	2266	12	ARANDELA PLANA	PLAIN WASHER	RONDELLE PLANE	
9	WM108001	6	ARANDELA MUELLE	SPRING WASHER	RONDELLE RESSORT	
10	181185	6	TUERCA	NUT	ECROU	
11	592984K1	1	SOPORTE L/D	SUPPORT RH	SUPPORT CD	PARA D.MECANICA
	592985K1	1	SOPORTE L/I	SUPPORT LH	SUPPORT CG	PARA D.MECANICA
12	175283	1	SOPORTE L/D	SUPPORT RH	SUPPORT CD	PARA D.HIDRAULICA
	205914	1	SOPORTE L/I	SUPPORT LH	SUPPORT CG	PARA D.HIDRAULICA
13	182120	2	TORNILLO	BOLT	BOULON	
	182124	2	TORNILLO	BOLT	BOULON	
14	3830	4	ARANDELA PLANA	PLAIN WASHER	RONDELLE PLANE	
15	2266	4	ARANDELA PLANA	PLAIN WASHER	RONDELLE PLANE	
16	181173	4	TUERCA	NUT	ECROU	
17	255070	2	TORNILLO	BOLT	BOULON	
18	577271	1	TORNILLO	BOLT	BOULON	
	577272	1	TORNILLO	BOLT	BOULON	
19	3680	4	ARANDELA	WASHER	RONDELLE	
20	252163K1	2	TUERCA	NUT	ECROU	
21	569522	S-N	SUPLEMENTO	SHIM	SUPPLEMENT	

100309

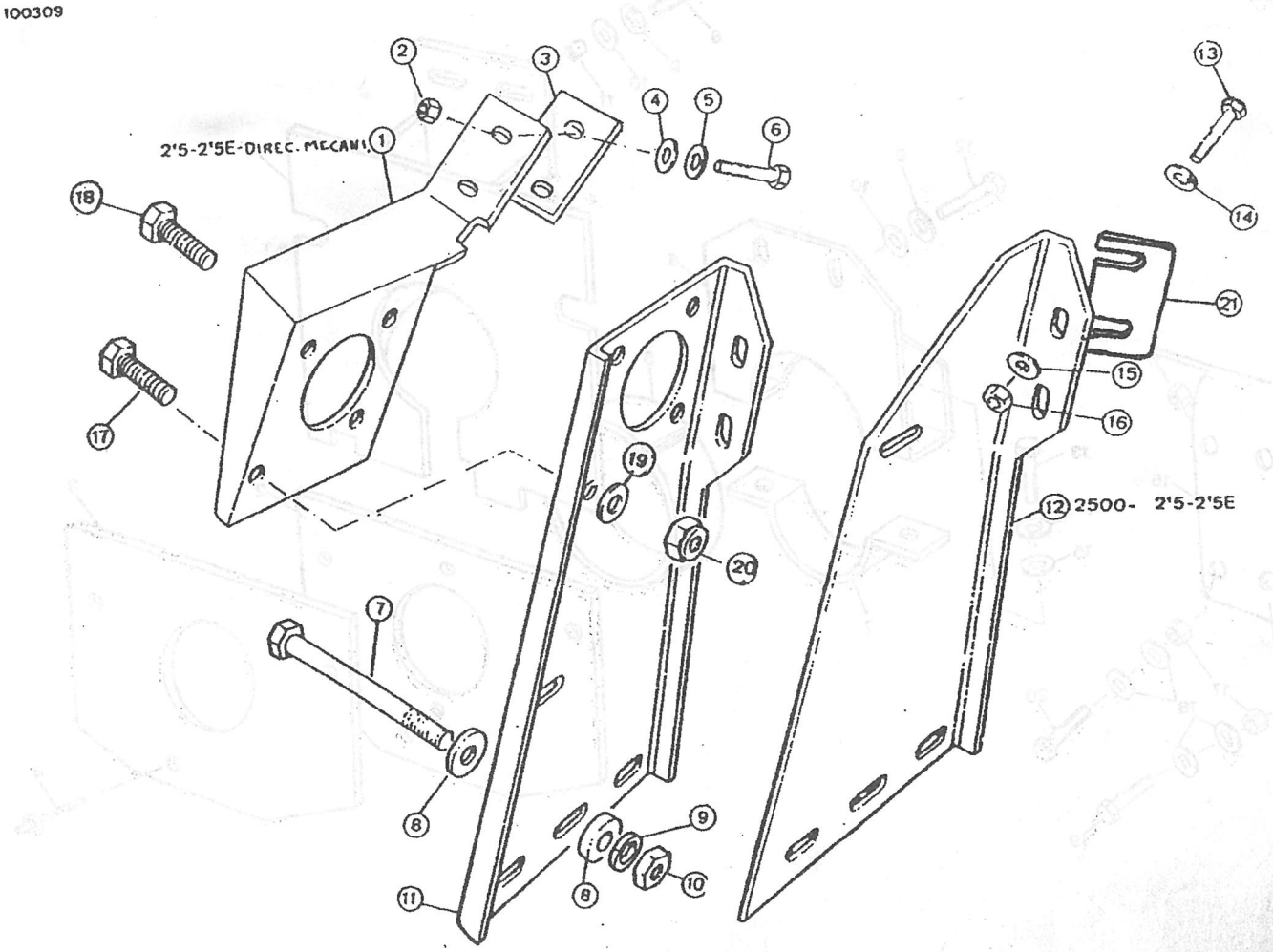

PUBLICACION N:790776 GRUPO=10 DIRECCION SUBGRUPO=SOPORTE COLUMNA DIRE
EDICION N: 1 GROUP=10 STEERING COLUMN SUBGROUP=STEERING COLUMN BRAC
GROUPE=10 DIRECTION SUBGROUPE=SUPPORT CYLONE DIREC

N.FIG PLATE N.FIG	N.PIEZA PARTNUMBER N.PIECE	CAN QTY OUT	DENOMINACION	DESCRIPTION	DENOMINATION	OBSERVACIONES
1	175204	1	SOPORTE SUPERIOR	UPPER SUPPORT	SUPPORT SUPERIEUR	
2	205912	1	GUARDAPOLVOS	DUST-CAP	PARE-POUSSIERE	
3	205911	1	PLACA	PLATE	PLAQUE	
4	78248	3	REMACHE	RIVET	RIVET	
5	348747	1	GOMA	RUBBER	CAOUTCHOUC	
6	346722	1	BRIDA SUPERIOR	UPPER CLAMP	ETRIER SUPERIEUR	
7	346715	1	BRIDA INFERIOR	LOVER CLAMP	ETRIER INFERIEUR	
8	182118	2	TORNILLO	BOLT	BOULON	
9	WM108001	4	ARANDELA MUELLE	SPRING WASHER	RONDELLE RESSORT	
10	3830	4	ARANDELA PLANA	PLAIN WASHER	RONDELLE PLANE	
11	79103	2	TUERCA REMACHE	NUT-RIVET	ECROU RIVET	
12	SH108201	2	TORNILLO	BOLT	BOULON	
13	79242	2	TORNILLO	BOLT	BOULON	
14	3074	2	ARANDELA MUELLE	SPRING WASHER	RONDELLE RESSORT	
15	3912	2	ARANDELA PLANA	PLAIN WASHER	RONDELLE PLANE	
16	175278	1	SOPORTE INFERIOR	LOVER SUPPORT	SUPPORT INFERIEUR	
17	181173	4	TUERCA	NUT	ECROU	
18	3830	8	ARANDELA PLANA	PLAIN WASHER	RONDELLE PLANE	
19	182101	2	TORNILLO	BOLT	BOULON	
20	182124	2	TORNILLO	BOLT	BOULON	

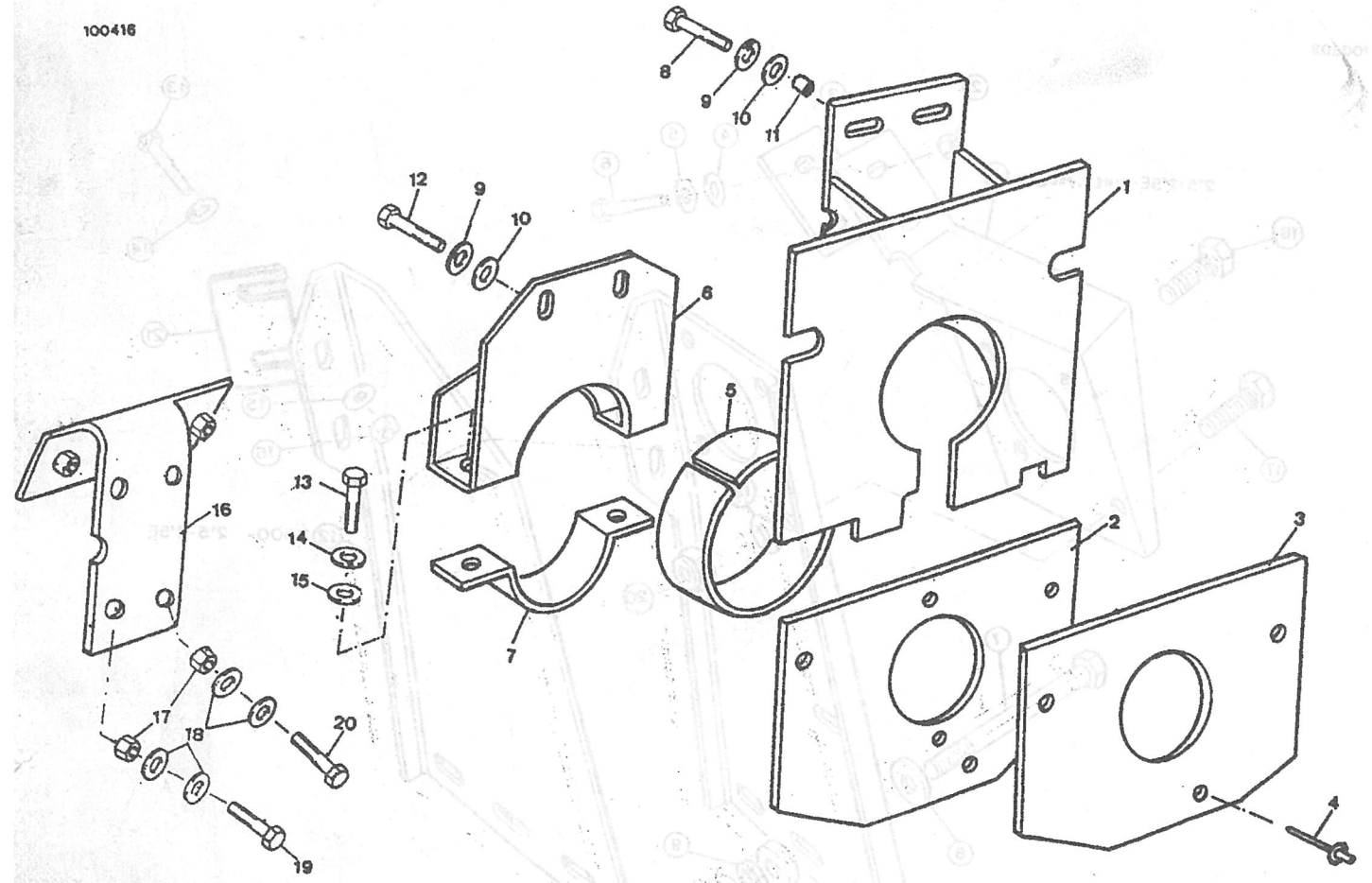

PUBLICACION N:790776
EDICION N: 1

GRUPO=10 DIRECCION
GROUP=10 STEERING COLUMN
GROUPE=10 DIRECTION

SUBGRUPO=UNIDAD COMPENSADORA (DIRECCION MECANICA)
SUBGROUP=STEERING REALY AND
SUBGROUPE=RENVOI ET TIMONERIE

N.FIG PLATE N.FIG	N.PIEZA PARTNUMBER N.PIECE	CAN QTY OUT	DENOMINACION	DESCRIPTION	DENOMINATION	OBSERVACIONES
1	NRC1269	1	CAJA	BOX	BOITE	
2	543972	1	CAJA	BOX	BOITE	
3	562875	1	EJE	SHAFT	AXE	
4	537877	4	CASQUILLO	BUSH	BAGUE	
5	230760	2	ARANDELA	WASHER	RONDELLE	
6	230759	1	MUELLE	SPRING	RESSORT	
7	624434	2	ARANDELA	WASHER	RONDELLE	
8	213340	2	RETEN	OIL SEAL	RETAINER	
9	624433	2	PLACA RETENCION	RETAINER PLATE	ARRETOIR PLAQUE	
10	624436	2	JUNTA	JOINT	JOINT	
11	544337	8	TORNILLO	SCREW	VIS	
12	10882	8	ARANDELA	WASHER	RONDELLE	
13	217694	1	BRIDA	FLANGE	BRIDE	
14	182112	4	TORNILLO	BOLT	BOULON	
15	3074	4	ARANDELA	WASHER	RONDELLE	
16	184288	2	TORNILLO	BOLT	BOULON	
17	3075	2	ARANDELA	WASHER	RONDELLE	
18	181182	2	TUERCA	NUT	ECROU	
19	535286	1	BIELETA	REALY LEVER	LEVIER	
20	256465	2	TORNILLO	BOLT	BOULON	
21	252163	2	TUERCA	NUT	ECROU	
22	531040	1	BIELETA	REALY LEVIER	LEVIER	
23	169158	1	BARRA DE MANDO	STEERING TRACK	BARRE DE CONEXION	
24	162111	3	TUERCA	NUT	ECROU	
25	712678	3	TUERCA	NUT	ECROU	
26	169106	2	ROTULA IZQUIERDA	BALL JOINT LH	ROTULE PASSE CG	
27	169107	3	ROTULA DERECHA	BALL JOINT RH	ROTULE PASSE CD	
28	852467	6	PASADOR	PIN	GOUPILLE	
29	853775	6	TUERCA	NUT	ECROU	
30	850425	6	ARANDELA PLANA	PLAIN WASHER	RONDELLE PLANE	
31	168170	1	BARRA DE MANDO	STEERIN TRACK	BARRE DE CONEXION	
32	169180	1	BARRA DE MANDO	STEERING TRACK ROD	BARRE DE CONEXION	
33	169105	1	ROTULA IZQUIERDAS	BALL JOINT LH	ROTULE PASSE CG	

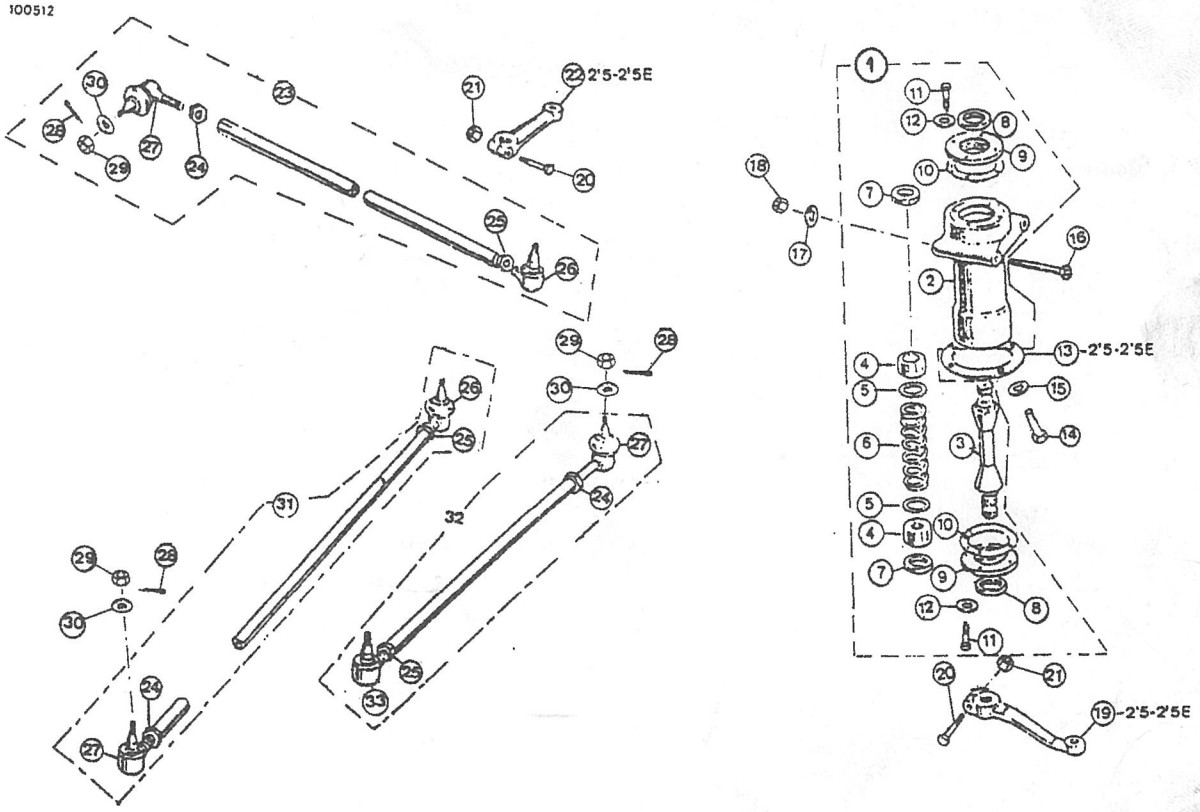

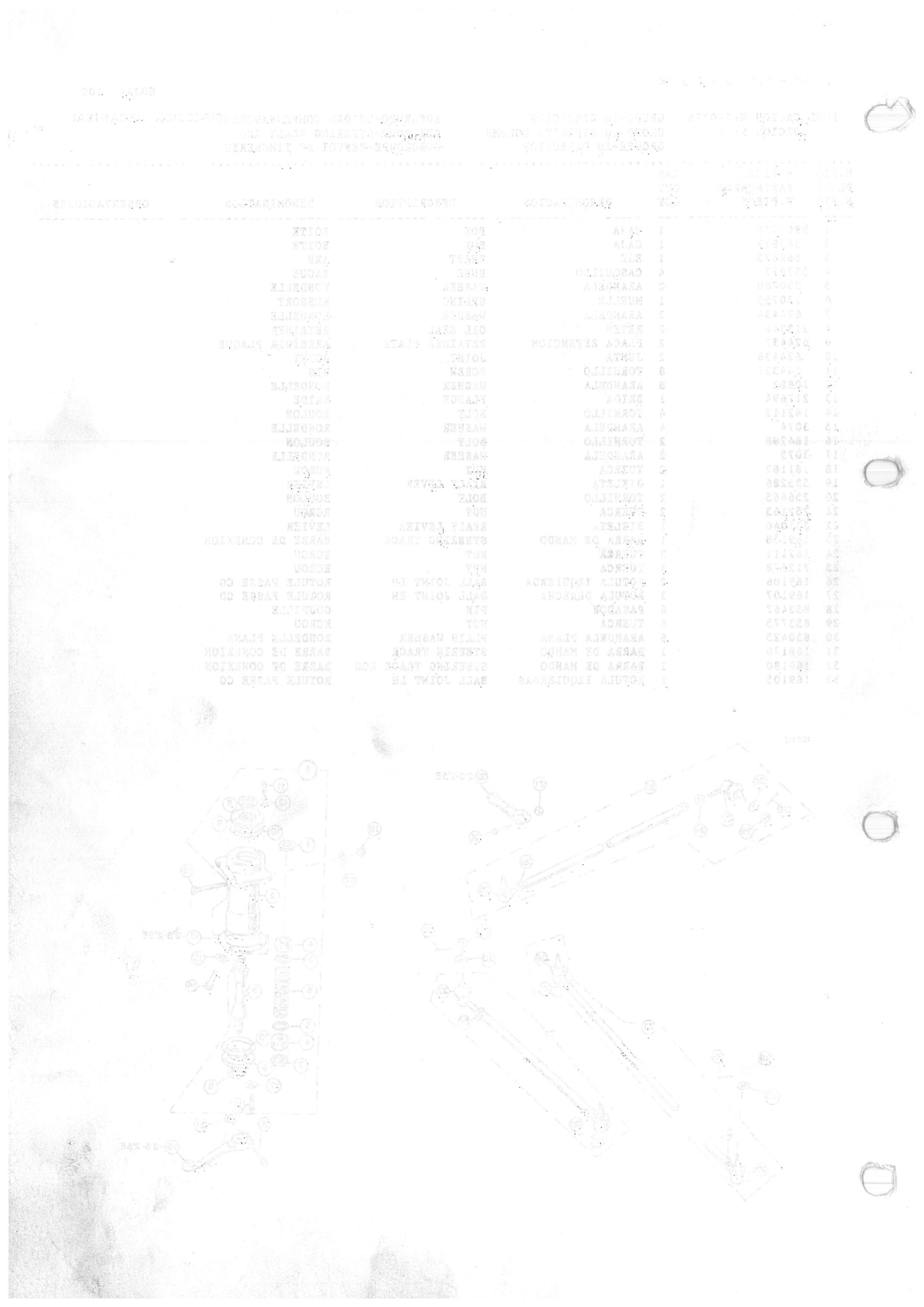

GRUPO 11 11 FRENOS

GROUP 11 11 BRAKES

GROUP 11 11 FREINS

COMPOSICION.....COMPOSITION.....COMPOSICION

REFERENCIA PARTNUMBER NUM.PIECE	DENOMINACION	DESCRIPTION	DENOMINATION
110113	PEDAL Y CILINDRO	PEDAL AND CYLINDER	PEDAL ET CYLINDRE
110223	TUBERIAS	PIPES	TUYAUS
110319	FRENOS DELANTEROS	FRONT BRAKES	FREINS AVANTS
110412	FRENOS TRASEROS	REAR BRAKES	FREINS ARRIERE
110414	FRENOS TRASEROS	REAR BRAKES	FREINS ARRIERE
110505	PALANCA DEL FRENO	HAND BRAKE LEVER	LEVIER DE FREIN
110606	EJE DE LA PALANCA FR	HAND BRAKE LEVER SHA	ARBRE DE LEVIER DE F
110705	FRENO A LA TRANSMISI	TRANSMISSION BRAKE	FREIN SUR TRANSMISSI
110712	FRENO A LA TRANSMISI	TRANSMISSION BRAKE	FREIN SUR TRANSMISSI
110809	DEPRESOR	VACUUM	DEPRESEUR

GRUPO - 11 11 FRENOS

GROUP - 11 11 BRAKES

GROUPE - 11 11 FREINS

CONFORMIDAD ....CONFORMITY....CONFORMITE

REFERENCIA PARTNUMBER NUM.TIRES	DENOMINACION	DESCRIPTION	DENOMINATION
110113	PEDAL Y CILINDRO	PEDAL AND CYLINDER	PEDAL ET CYLINDRE
110223	TUBERIAS	PIPES	TUYAUS
110319	FRENOS DELANTEROS	FRONT BRAKES	FREINS AVANTS
110412	FRENOS TRASEROS	REAR BRAKES	FREINS ARRIERE
110413	FRENOS TRASEROS	REAR BRAKES	FREINS ARRIERE
110505	PALANCA DEL FRENO	HAND BRAKE LEVER	LEVIER DE FREIN
110506	ELE DE LA PALANCA EN	HAND BRAKE LEVER END	ARRET DE LEVIER DE F
110705	FRENO A LA TRANSMISI	TRANSMISSION BRAKE	FREIN SUR TRANSMISSI
110712	FRENO A LA TRANSMISI	TRANSMISSION BRAKE	FREIN SUR TRANSMISSI
110809	DEPRESOR	VACUUM	DEPRESSEUR

PUBLICACION N:790776 GRUPO=11 FRENOS SUBGRUPO=PEDAL Y CILINDRO
EDICION N: 1 GROUP=11 BRAKES SUBGROUP=PEDAL AND CYLINDER
GROUPE=11 FREINS SUBGROUPE=PEDAL ET CYLINDRE

N.FIG PLATE N.FIG	N.PIEZA PARTNUMBER N.PIECE	CAN QTY OUT	DENOMINACION	DESCRIPTION	DENOMINATION	OBSERVACIONES
1	174224	1	SOPORTE	SUPPORT	SUPPORT	
2	338027	1	GOMA	RUBBER	CAOUTCHOUC	
3	087252	4	TUERCA	NUT	ECROU	
4	WM108001	4	ARANDELA	WASHER	RONDELLE	
5	174239	1	GOMA	RUBBER	CAOUTCHOUC	
6	174240	1	JUNTA	JOINT	JOIN	
7	790755	S-N	BOSTIK 13X4	BOSTIK 13X4	BOSTIK 13X4	
8	182118	6	TORNILLO	BOLT	BOULON	
9	2223	6	ARANDELA	WASHER	RONDELLE	
10	181169	6	TUERCA	NUT	ECROU	
11	166778	1	INTERRUPTOR PARE	SWITCH STOP	INTERRUPTEUR D ARRET	
12	171273	1	PEDAL	PEDAL	PEDALE	
13	171288	1	GOMA	RUBBER	CAOUTCHOUC	
14	184233	1	BULON	BOLT	BOULON	
15	2396	1	PASADOR	PIN	GOUPILLE	
16	171279	2	CASQUILLO	BUSH	BAGUE	
17	174221	1	EJE	SHAFT	AXE	
18	171282	1	ANILLO ELASTICO	CIRCLIP	CIRCLIP	
19	171280	1	MUELLE L I	SPRING L H	RESSORT C G	
	171281	1	MUELLE L D	SPRING R H	RESSORT C D	
20	174295	1	CONJ.SERVO	SERVO ASSY	ENS SERVO	
21	193783	1	JUEGO DE REPARACION	OVERHAUL KIT	JEU DE REPARATION	
22	194993	1	CILINDRO	CYLINDER	CYLINDER	
23	194988	1	JUEGO DE REPARACION	OVERHAUL KIT	JEU DE REPARATION	
24	194989	1	DEPOSITO	TANK	RESERVOIR	
25	194990	1	TAPON	PLUG	BOUCHON	
26	193116	2	TUERCA	NUT	ECROU	
27	194860	2	ARANDELA	WASHER	RONDELLE	
28	194992	1	SERVO	SERVO	SERVO	
29	184298	1	ARANDELA	WASHER	RONDELLE	

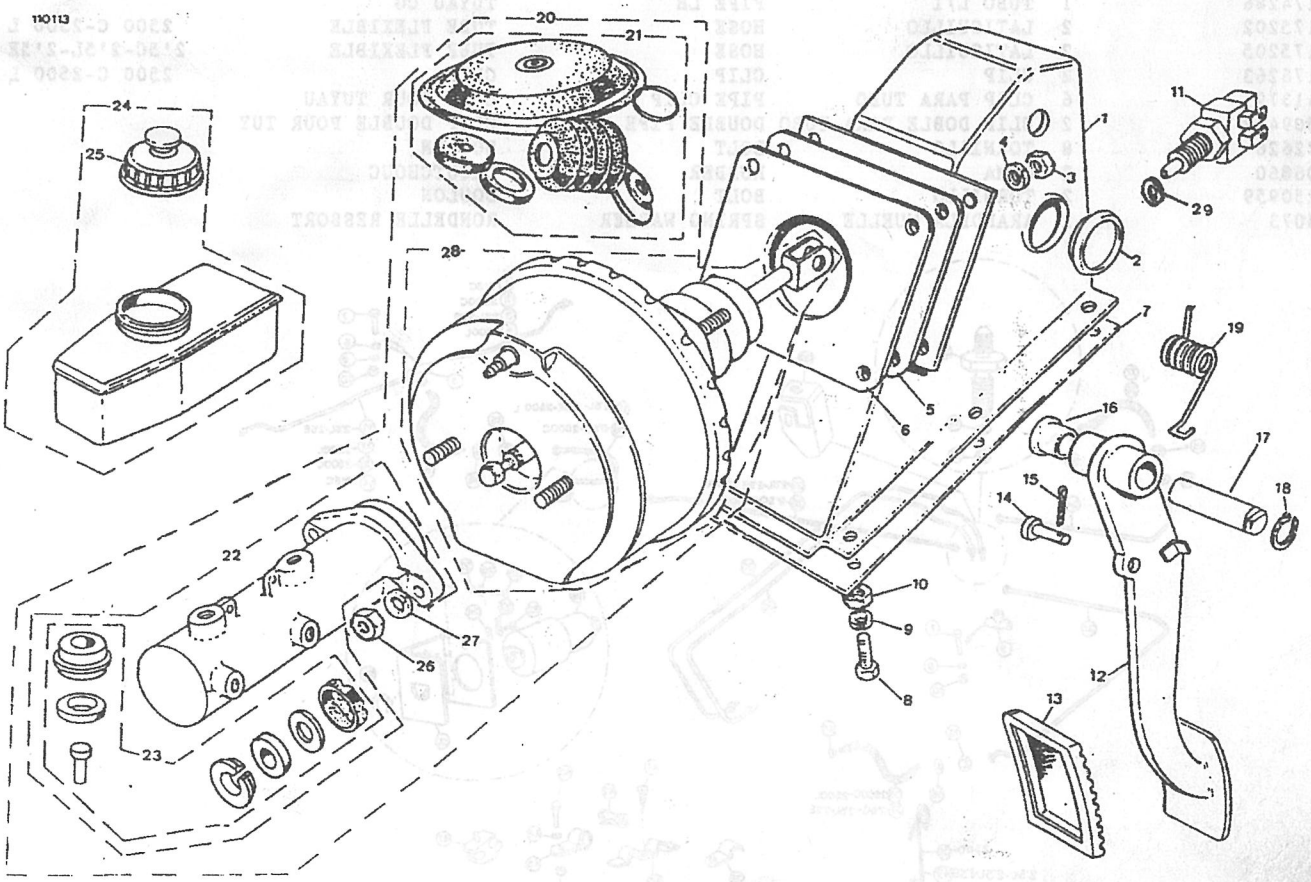

PUBLICACION N:790776 GRUPO=11 FRENOS SUBGRUPO=TUBERIAS
EDICION N: 1 GROUP=11 BRAKES SUBGROUP=PIPES
GROUPE=11 FREINS SUBGROUPE=TUYAUS

N.FIG PLATE N.FIG	N.PIEZA PARTNUMBER N.PIECE	CAN QTY OUT	DENOMINACION	DESCRIPTION	DENOMINATION	OBSERVACIONES
1	174259	1	TUBO L/D	PIPE RH	TUYAU CD	2'5 C
2	175291	1	TUBO L/D	PIPE RH	TUYAU CD	2500 C
3	166383	1	TUBO L/D	PIPE RH	TUYAU CD	2'5 L-2'5 E
4	165103	1	TUBO L/D	PIPE RH	TUYAU CD	2500 L
5	166372	2	T DE DERIVACION	T OF DERIVATTION	T DE DERIVATION	
6	NRC4287	1	LATIGUILLO	HOSE	TUBE FLEXIBLE	
7	SH106201	2	TORNILLO	BOLT	BOULON	
8	3900	1	ARANDELA PLANA	PLAIN WASHER	RONDELLE PLANE	
9	WM106001	2	ARANDELA MUELLE	SPRING WASHER	RONDELLE RESSORT	
10	NH106041	2	TUERCA	NUT	ECROU	
11	166382	1	TUBO L/I	PIPE LH	TUYAU CG	2'5 L-2'5 E
12	165104	1	TUBO L/I	PIPE LH	TUYAU CG	2500 L
13	175292	1	TUBO L/I	PIPE LH	TUYAU CG	2500 C
14	174260	1	TUBO L/I	PIPE LH	TUYAU CG	2'5 C
15	CRC1487	4	TUERCA	NUT	ECROU	
16	189499	4	ARANDELA MUELLE	SPRING WASHER	RONDELLE RESSORT	
17	174209	1	TUBO	PIPE	TUYAU	2'5L-2'5E-2500L
18	174297	1	TUBO	PIPE	TUYAU	2'5 C-2500 C
19	51950A83120	1	VALVULA LIMITADORA	LIMITATION VALVE	SOUPAPE DE LIMITATIO	
20	173297	1	SOPORTE	SUPPORT	SUPPORT	
21	08332T11156	1	CLIP	CLIP	CLIP	
22	77789	1	TORNILLO	BOLT	BOULON	
23	51951B83400	1	FLEVE	BAND	FEVILLARD	
24	09148A35001	1	TUERCA	NUT	ECROU	
25	SH106161	2	TORNILLO	BOLT	BOULON	
26	4071	2	ARANDELA PLANA	PLAIN WASHER	RONDELLE PLANE	
27	WM106001	2	ARANDELA MUELLE	SPRING WASHER	RONDELLE RESSORT	
28	174288	1	TUBO	PIPE	TUYAU	2'5 C-2500 C
29	174285	1	TUBO	PIPE	TUYAU	2'5L-2'5E-2500L
30	175294	1	TUBO	PIPE	TUYAU	
31	175293	1	TUBO	PIPE	TUYAU	
32	174292	1	SOPORTE	SUUPORT	SUPPORT	
33	713593	1	RACORD	RACORD	RACORD	
34	174289	1	TUBO L/D	PIPE RH	TUYAU CD	
35	174286	1	TUBO L/I	PIPE LH	TUYAU CG	
36	175202	2	LATIGUILLO	HOSE	TUBE FLEXIBLE	2500 C-2500 L
37	175205	2	LATIGUILLO	HOSE	TUBE FLEXIBLE	2'5C-2'5L-2'5E
38	176263	2	CLIP	CLIP	CLIP	2500 C-2500 L
39	41379	6	CLIP PARA TUBO	PIPE CLIP	CLIP POUR TUYAU	
40	509412	2	CLIP DOBLE PARA TUBO	DOUBLE PIPE CLIP	CLIP DOUBLE POUR TUY	
41	72626	8	TORNILLO	BOLT	BOULON	
42	06860	2	GOMA	RUBBER	CAOUTCHOUC	
43	250959	2	TORNILLO	BOLT	BOULON	
44	3073	2	ARANDELA MUELLE	SPRING WASHER	RONDELLE RESSORT	

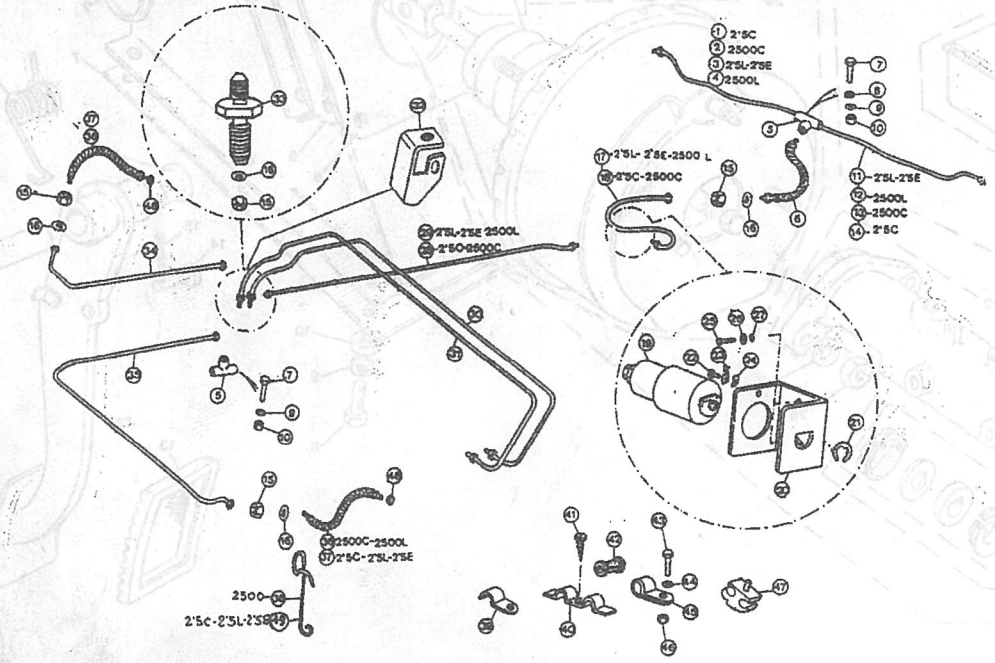

PUBLICACION N:790776 GRUPO=11 FRENOS SUBGRUPO=TUBERIAS
EDICION N: 1 GROUP=11 BRAKES SUBGROUP=PIPES
GROUPE=11 FREINS SUBGROUPE=TUYAUS

N.FIG PLATE N.FIG	N.PIEZA PARTNUMBER N.PIECE	CAN QTY OUT	DENOMINACION	DESCRIPTION	DENOMINATION	OBSERVACIONES
45	56666	2	CLIP PARA TUBO	PIPE CLIP	CLIP POUR TUYAU	
46	2247	2	TUERCA	NUT	ECROU	
47	176214	4	CLIP PARA TUBO	PIPE CLIP	CLIP POUR TUYAU	
48	09161-10009	2	JUNTA	JOIT	JOINT	
49	176264	1	CLIP L/D	CLIP RH	CLIP CD	2'5C-2'5L-2'5E
	177203	1	CLIP L/I	CLIP LH	CLIP CG	

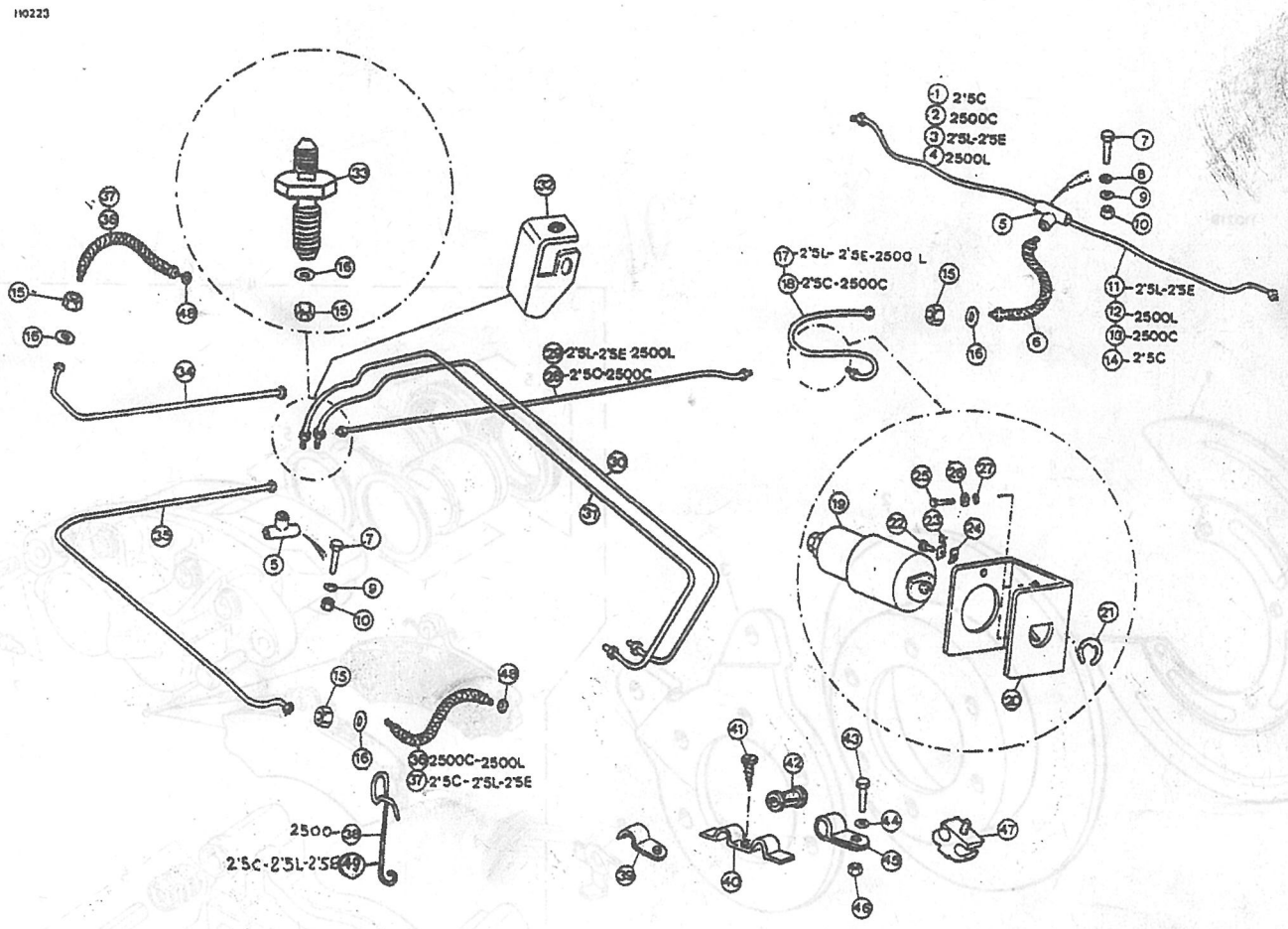

PUBLICACION N:790776 GRUPO=11 FRENOS SUBGRUPO=FRENOS DELANTEROS
EDICION N: 1 GROUP=11 BRAKES SUBGROUP=FRONT BRAKES
GROUPE=11 FREINS SUBGROUPE=FREINS AVANTS

N.FIG PLATE N.FIG	N.PIEZA PARTNUMBER N.PIECE	CAN QTY OUT	DENOMINACION	DESCRIPTION	DENOMINATION	OBSERVACIONES
1	174208	2	PROTECTOR	MUDSHIELD	PROTECTEUR	
2	173214	2	DISCO	DISC	DISQUE	
3	173213	2	SOPORTE	SUPPORT	SUPPORT	
4	173209	1	CONJ. FRENO L/I	BRAKE ASSY LH	ENS FREIN CG	
	173210	1	CONJ. FRENO L/D	BRAKE ASSY RH	ENS FREIN CD	
5	194821	1	JUEGO DE REPARACION	OVERHAUL KIT	JEU DE REPARATION	
6	194820	1	JUEGO 4 PASTILLAS	FRICTION PADS SET 4	JEU DE 4 PASTILLE	
7	194413	2	PURGADOR	BLEED SCREW	VIS DE PURGE	
8	173200	4	FIADOR	LOCKER	PLAQUE DE ARRET	
9	184294	4	TORNILLO	BOLT	BOULON	

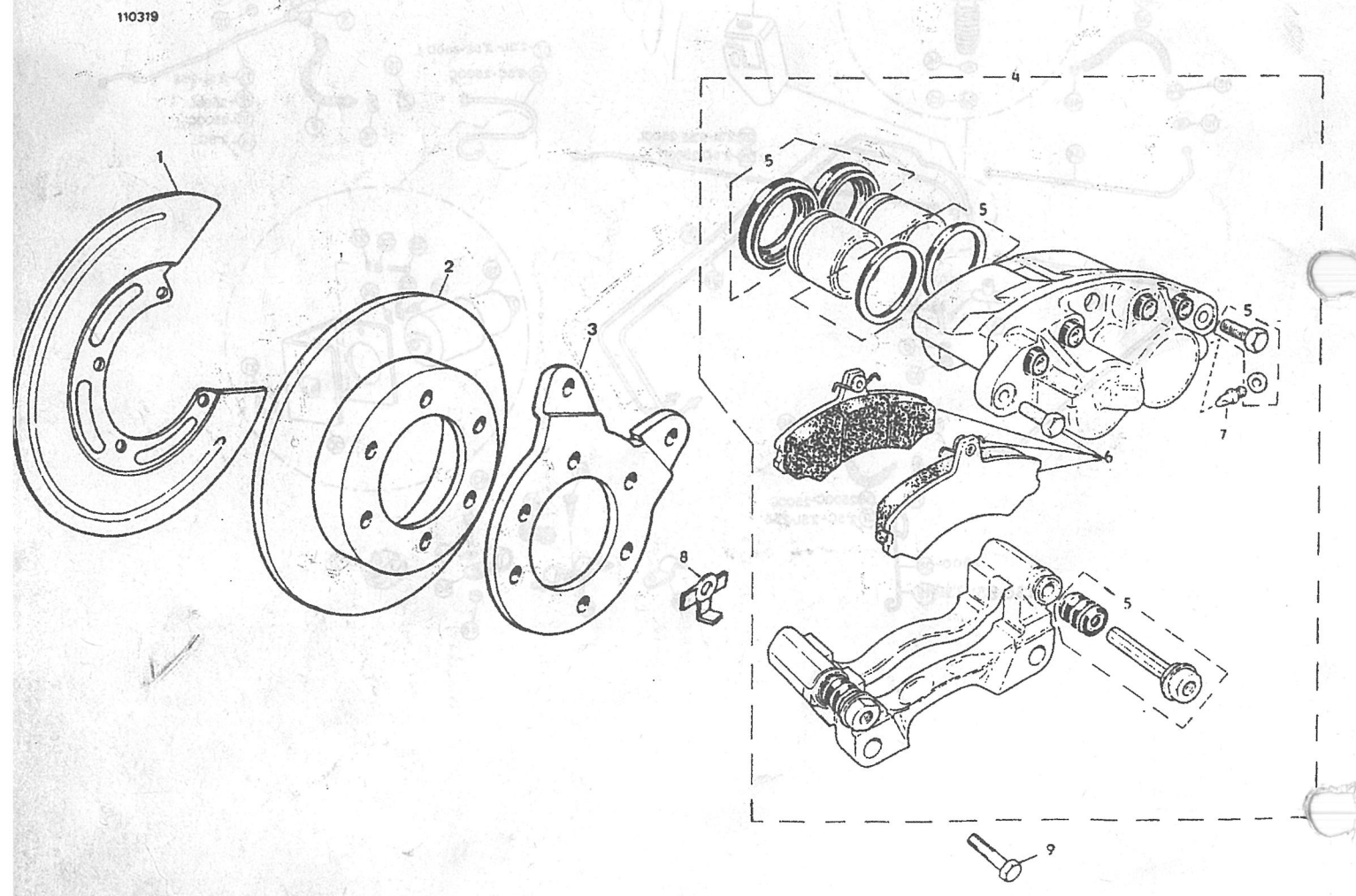

PUBLICACION N:790776
EDICION N: 1

GRUPO=11 FRENOS
GROUP=11 BRAKES
GROUPE=11 FREINS

SUBGRUPO=FRENOS TRASEROS
SUBGROUP=REAR BRAKES
SUBGROUPE=FREINS ARRIERE

N.FIG PLATE N.FIG	N.PIEZA PARTNUMBER N.PIECE	CAN QTY OUT	DENOMINACION	DESCRIPTION	DENOMINATION	OBSERVACIONES
1	515405	1	PLACA DE ANCLAJE LD	BRAKE ANCHOR PLAT RH	PLATEAU DE FREIN CD	
	515406	1	PLACA DE ANCLAJE LI	BRAKE ANCHOR PLAT LH	PLATEAU DE FREIN CG	
2	194852	2	CILINDRO DE FRENO	WHEEL CYLINDER	CYLINDRE DE ROVE	
3	194853	1	JUEGO REPARAC 2 UNID	WHEEL C KIT 2 UNIT	JEU DE REPARAT 4 UNI	
4	194854	2	PURGADOR	BLEED SCREW	VIS DE PURGE	
5	600208	4	ARANDELA	WASHER	RONDELLE	
6	194855	4	TORNILLO	BOLT	BOULON	
7	194851	1	JUEGO DE MUELLES	SPRING KIT	JEU DE RESSORT	
8	236993	2	PLACA	PLATE	PLAQUE	
9	236995	2	FIADOR	LOCKER	PLAQUE DE ARRET	
10	238542	4	TORNILLO	BOLT	BOULON	
11	505675	1	ZAPATA LI 2 UNIDADES	BRAKE SHOE LH 2 UNIT	MACHOIRES CG 2 UNITE	
	505676	1	ZAPATA LD 2 UNIDADES	BRAKE SHOE RH 2 UNIT	MACHOIRES CD 2 UNITE	
12	AAU9942	1	FORRO ZAPATA 4 UNIDA	LINING 4 UNITS	GARNITURE 4 UNITES	
13	591039	2	TAMBOR FRENO	BRAKE DRVM	TAMBOUR DE FREIN	
14	1510	2	TORNILLO	SCREW	VIS	
15	174226	1	CONJ.FRENO TRASE.L/D	REAR BRAKES ASSY RH	ENS FREIN ARRIERE CD	
	174227	1	CONJ.FRENO TRASE.L/I	REAR BRAKE ASSY LH	ENS FREIN ARRIERE CG	

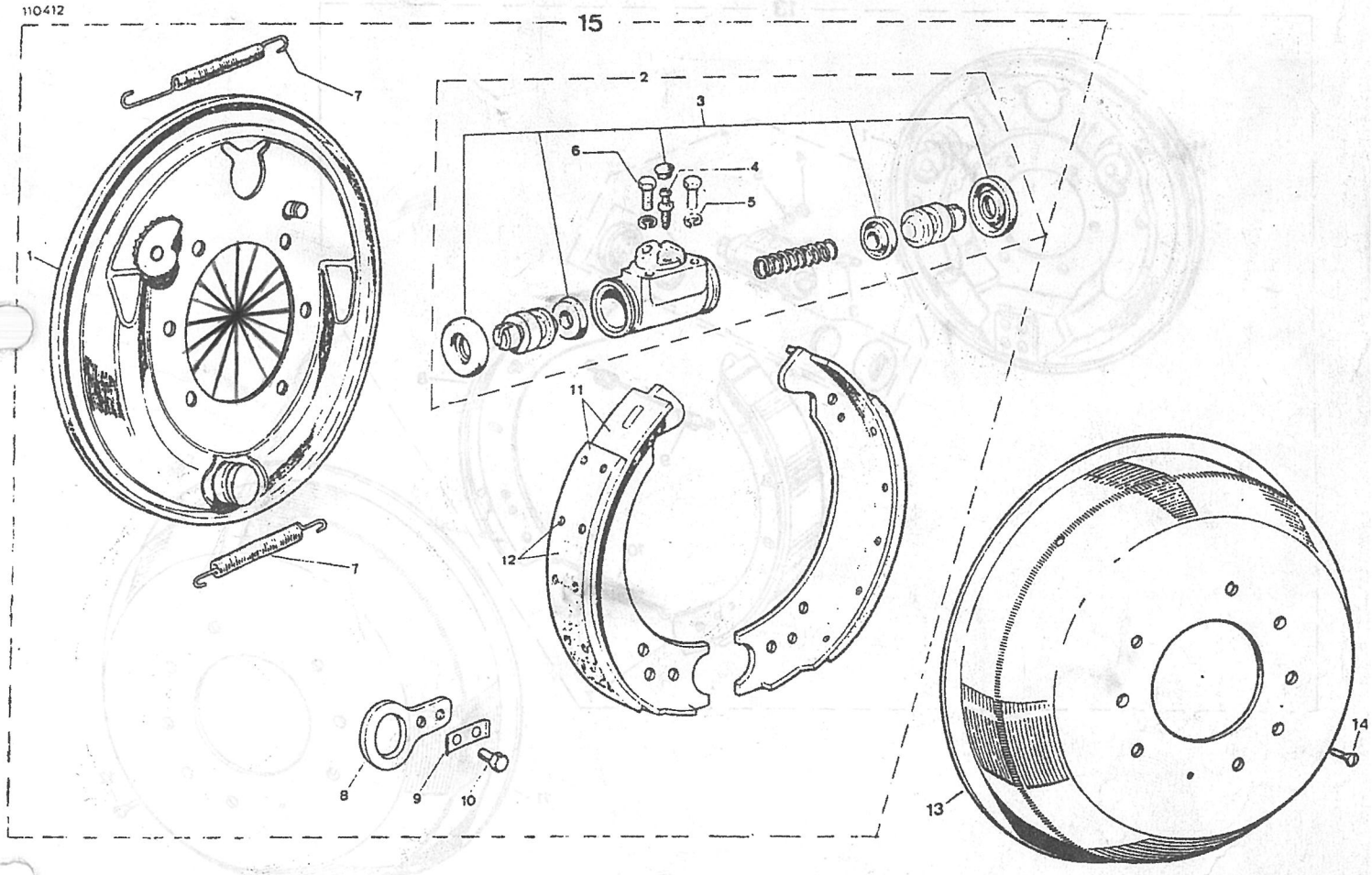

PUBLICACION N:790776 GRUPO=11 FRENOS SUBGRUPO=FRENOS TRASEROS
EDICION N: 1 GROUP=11 BRAKES SUBGROUP=REAR BRAKES
GROUPE=11 FREINS SUBGROUPE=FREINS ARRIERE

N.FIG PLATE N.FIG	N.PIEZA PARTNUMBER N.PIECE	CAN QTY OUT	DENOMINACION	DESCRIPTION	DENOMINATION	OBSERVACIONES
1	531888	1	PLACA DE ANCLAJE LI	BRAKE ANCHOR PLAT LH	PLATEUA DE FREIN CG	
	531889	1	PLACA DE ANCLAJE LD	BRAKE ANCHOR PLAT RH	PLATEAU DE FREIN CD	
2	GWC305	1	CILINDRO FRENO L D	WHEEL CYLINDER R H	CYLONDRE ROUE C D	
	GWC306	1	CILINDRO FRENO L I	WHEEL CYLONDER L H	CYLINDRE ROVE C G	
3	556508	2	PURGADOR	BLEED SCREEW	VIS DEPURGE	
4	233879	4	TUERCA	NUT	ECROU	
5	600208	4	ARANDELA	WASHER	RONDELLE	
6	275744	1	CONJ REPAR CILIND	WHEL CYLINDER KIT A	ENSEMBLE E JEU REPA	
7	532044	2	ZAPATA 2 UNIDADES	BRAKE SHOE 2 UNITS	MACHOIRES 2 UNITES	
8	510574	2	FORRO ZAPATA 4 UNIDA	LINING 4 UNITS	GARNITURE 4 UNITES	
9	531892	2	MUELLES	SPRING	RESSORT	
10	531893	2	MUELLES	SPRING	RESSORT	
11	576973	2	TAMBOR FRENO	BRAKE DRUM	TAMBOUR DE FREIN	
12	1510	12	TORNILLO	SCREW	VIS	
13	FRC3920K1	1	CONJ.FRENO TRASE.L/D	REAR BRAKE ASSY RH	ENS FREIN ARRIERE CD	
	FRC3921K1	1	CONJ.FRENO TRASE.L/I	REAR BRAKE ASSY LH	ENS FREIN ARRIERE CG	

110414

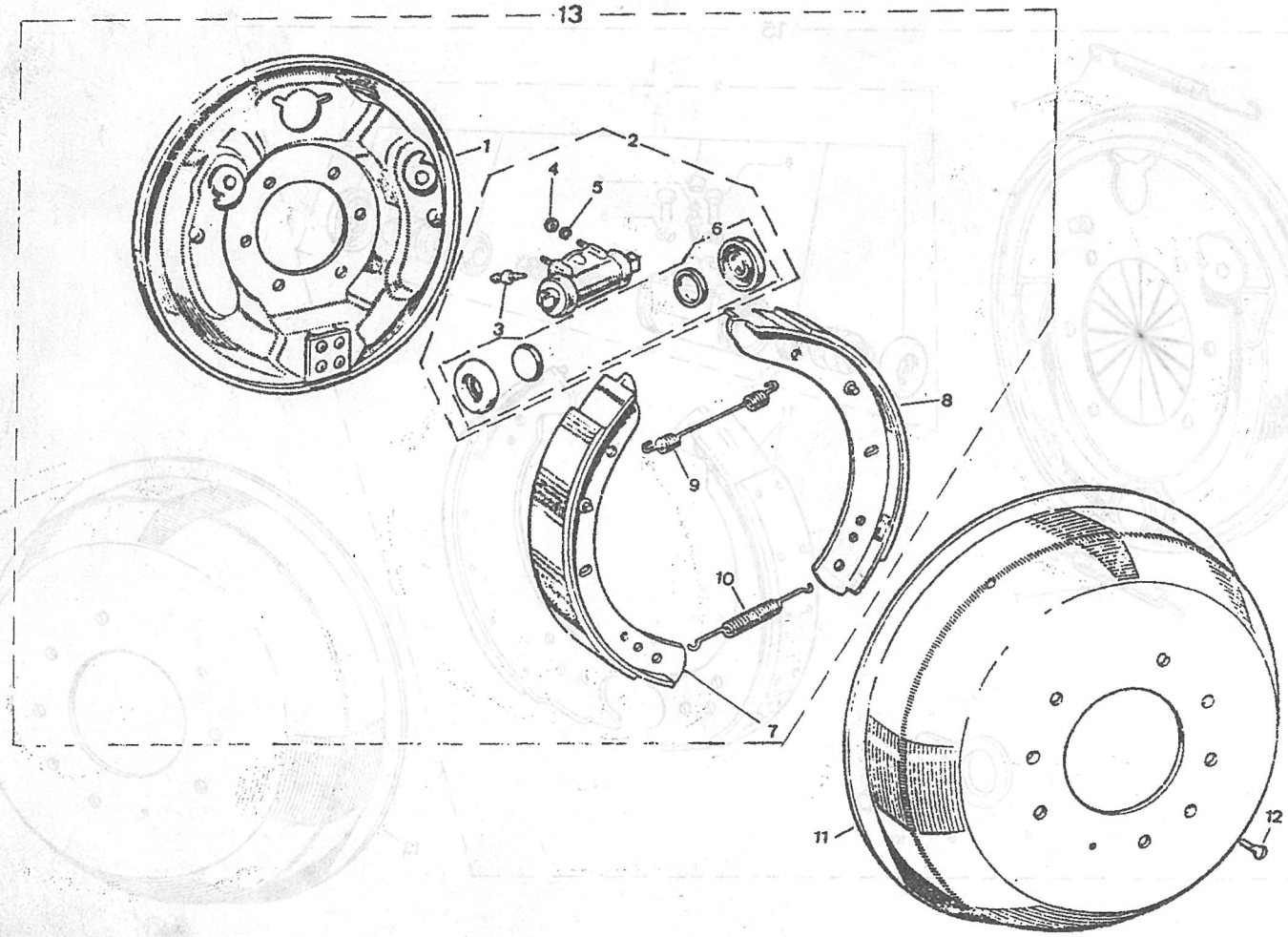

PUBLICACION N:790776 GRUPO=11 FRENOS SUBGRUPO=PALANCA DEL FRENO
EDICION N: 1 GROUP=11 BRAKES SUBGROUP=HAND BRAKE LEVER
GROUPE=11 FREINS SUBGROUPE=LEVIER DE FREIN

N.FIG PLATE N.FIG	N.PIEZA PARTNUMBER N.PIECE	CAN QTY OUT	DENOMINACION	DESCRIPTION	DENOMINATION	OBSERVACIONES
1	562706K1	1	CONJ.PALANCA FRENO	HAND BRAKE LEVER ASS	ENS LEVIER DE FREIN	2'5C-2'5L-2'5E
2	176213	1	CONJ.PALANCA FRENO	HAND BRAKE LEVER ASS	ENS LEVIER DE FREIN	2500 C-2500 L
3	562705	1	PALANCA FRENO	BRACKE LEVER	LEVIER DE FREIN	
4	552856	1	BOTON	PLUNGER	PISTON	
5	58702	1	MUELLE	SPRING	RESSORT	
6	552857	S-N	ARANDELA	WASHER	RONDELLE	
7	543292	1	VARILLA	ROD	TRINGLE	
8	543291	1	VARILLA	ROD	TRINGLE	
9	559563	1	BULON PASADOR	BOLT-PIN	BOULON-GOUPILLE	
10	4432	2	PASADOR	PIN	GOUPILLE	
11	543275	2	CASQUILLO	BUSH	BAGUE	
12	50235	1	TRINQUETE	BRAKE CATCH	TRINQUET	
13	4574	1	ARANDELA PLANA	PLAIN WASHER	RONDELLE PLANE	
14	182120	2	TORNILLO	BOLT	BOULON	
15	WM108001	4	ARANDELA MUELLE	SPRING WASHER	RONDELLE RESSORT	
16	217983	4	ALOJAMIENTO	HOUSING	MANCHON DE COUSSINET	
17	164633	2	COJINETE ESFERICO	SPHERICAL BEARING	COUSSINET	
18	217985	4	ANILLO FIELTRO	FELT RING	ANNEAU FEUTRE	
19	552805	2	CASQUILLO	BUSH	BAGUE	
20	256043	1	TORNILLO	BOLT	BOULON	
21	2210	2	ARANDELA	WASHER	RONDELLE	
22	255046	4	TORNILLO	BOLT	BOULON	
23	180426	4	ARANDELA	WASHER	RONDELLE	
24	254812	4	TUERCA	NUT	ECROU	
25	176206	1	PLACA CREMALLERA	RATCHER	SECTEUR DENTE	2500 C-2500 L
26	552583K1	1	PLACA CREMALLERA	RATCHER	SECTEUR DENTE	2'5C-2'5L-2'5E
27	2218	2	ARANDELA	WASHER	RONDELLE	
28	181170	1	TUERCA	NUT	ECROU	
29	172281	1	EJE	SHAFT	AXE	2500 C-2500 L
30	552578K1	1	EJE	SHAFT	AXE	2'5C-2'5L-2'5E
31	2210	1	ARANDELA	WASHER	RONDELLE	
32	218408	1	BULON-PASADOR	BOLT-PIN	BOULON-GOUPILLE	
33	218410	2	CASQUILLO	BUSH	BAGUE	
34	218409	1	PLACA	PLATE	PLAQUE	
35	181153	2	TORNILLO	BOLT	BOULON	
36	03141T04106	1	TORNILLO	BOLT	BOULON	
37	37940A79000	1	INTERRUPTOR FRENO	BRAKE SWITCH	INTERRUPTEUR FREIN	2500 C-2500 L
38	543293	1	PLACA	PLATE	PLAQUE	
39	3904	1	PASADOR	PIN	GOUPILLE	

110505

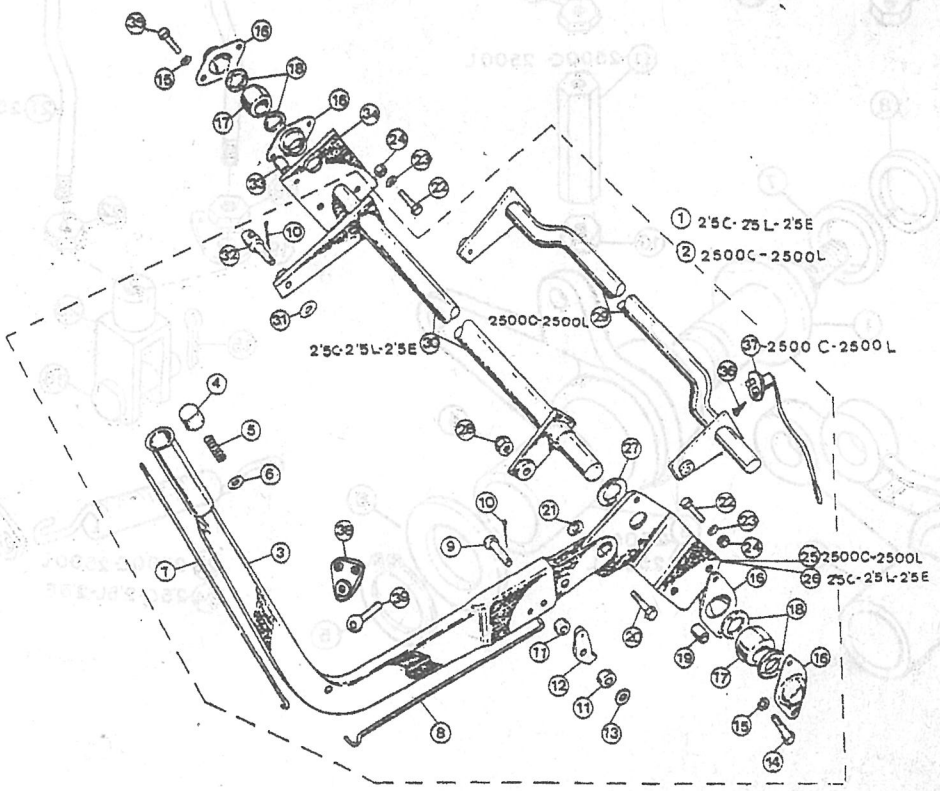

PUBLICACION N:790776 GRUPO=11 FRENOS SUBGRUPO=EJE DE LA PALANCA FR
EDICION N: 1 GROUP=11 BRAKES SUBGROUP=HAND BRAKE LEVER SHA
GROUPE=11 FREINS SUBGROUPE=ARBRE DE LEVIER DE F

N.FIG PLATE N.FIG	N.PIEZA PARTNUMBER N.PIECE	CAN QTY OUT	DENOMINACION	DESCRIPTION	DENOMINATION	OBSERVACIONES
1	577137	1	EJE	SHAFT	AXE	
2	238180	1	PALANCA	LEVER	LEVIER	2'5C-2'5L-2'5E
3	172236	1	PALANCA	LEVER	LEVIER	2500 C-2500 L
4	171237	1	CASQUILLO	BUSH	BAGUE	
5	09203	1	ANILLO ELASTICO	CIRCLIP	CIRCLIP	
6	3299	1	ARANDELA PLANA	PLAIN WASHER	RONDELLE PLANE	
7	3680	1	ANILLO	RING	ANNEAU	
8	3077	1	ARANDELA MUELLE	SPRING WASHER	RONDELLE RESSORT	
9	254813	1	TUERCA	NUT	ECROU	
10	180108	1	TUERCA	NUT	ECROU	
11	175211	1	TUERCA DE REGLAJE	ADJUSTING NUT	ECROU DE REGLAGE	2500 C-2500 L
12	187135	1	TUERCA ROSCADA IZQUI	LEFT SCREW NUT	ECROU FILETAGE A GOS	
13	176283	1	HORQUILLA	CLAVIS FORK	FOURCHETTE	2500 C-2500 L
14	176200	1	HORQUILLA	CLAVIS FORK	FOURCHETTE	2'5C-2'5L-2'5E
15	4432	2	PASADOR	PIN	GOUPILLE	
16	178227	2	BULON-PASADOR	BOLT-PIN	BOULON-GOUPILLE	
17	278020	1	VARILLA	ROD	TRINGLE	2'5C-2'5L-2'5E
18	181185	3	TUERCA	NUT	ECROU	
19	240708	1	PLACA	PLATE	PLAQUE	
20	175299	1	HORQUILLA	CLAVIS FORK	FOURCHETTE	
21	173291	1	VARILLA	ROD	TRINGLE	2500 C-2500 L
22	181185	4	TUERCA	NUT	ECROU	
23	183297	1	MUELLE	SPRING	RESSORT	2500 C-2500 L
24	59663	1	MUELLE	SPRING	RESSORT	2.5C-2'5L-2'5E
25	267412	1	PLACA	PLATE	PLAQUE	

110606

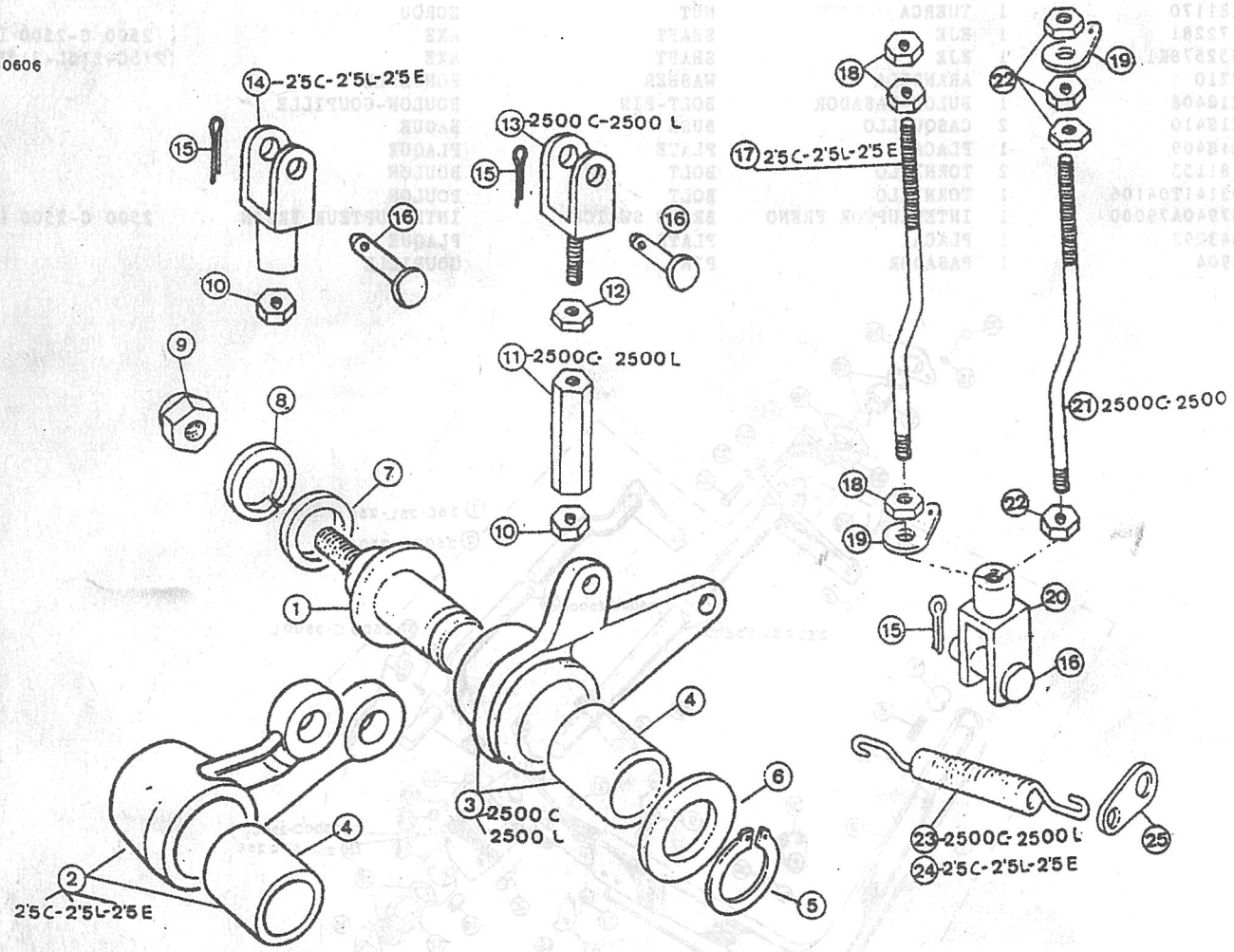

PUBLICACION N:790776 GRUPO=11 FRENOS SUBGRUPO=FRENO A LA TRANSMISI
EDICION N: 1 GROUP=11 BRAKES SUBGROUP=TRANSMISSION BRAKE
GROUPE=11 FREINS SUBGROUPE=FREIN SUR TRANSMISSI

N.FIG PLATE N.FIG	N.PIEZA PARTNUMBER N.PIECE	CAN QTY OUT	DENOMINACION	DESCRIPTION	DENOMINATION	OBSERVACIONES
1	175212	1	FRENO A LA TRANSMISI	TRANSMISSION BRAKE	FREIN SUR TRANSMISSI	D -CHASIS-123234
	FRC4968	1	FRENO A LA TRANSMISI	TRANSMISSION BRAKE	FREIN SUR TRANSMISSI	H -CHASIS-123233
2	515365	1	PLACA DE ANCLAJE	ANCHOR PLATE	PLATEAN DE FREIN	
3	515467	1	HORQUILLA	FORK	FOURCHETTE	
4	515470	1	HORQUILLA	FORK	FOURCHETTE	
5	515468	1	HORQUILLA	FORK	FOURCHETTE	
6	515466	1	GUARDAPOLVOS	DUST COVER	CAPUCHON	
7	GBS552	1	JUEGO DE 2 ZAPATAS	SHOE ASSY BOXED PAIR	ENS DE DEUX MACHOIRE	
8	515465	2	MUELLE	SPRING	RESSORT	
9	515925	1	UNIDAD REGULADORA	ADJUSTER UNIT	BOITIER DE REGLEUR	
10	515366	1	UNIDAD EXPANSORA	EXPANDER UNIT	BOITIER DE EXPANSION	
11	515926	1	VARILLA	ROD	TRINGLE	
12	524515	1	PLACA	PLATE	PLAQUE	
13	254800	2	TUERCA	NUT	ECROU	
14	515927	1	MUELLE	SPRING	RESSORT	
15	274423K1	1	TAMBOR DE FRENO	BRAKE DRUM	TAMBOUR DE FREIN	
16	180138	3	TUERCA	NUT	ECROU	
17	561368	1	CAJA	OIL CATCHER	BOITIER	
18	561856	1	JUNTA	JOINT	JOINT	
19	180107	4	TUERCA	NUT	ECROU	
20	180426	4	ARANDELA	WASHER	RONDELLE	
21	176200	1	HORQUILLA	FORK	FOURCHETTE	H -CHASIS-123233
	177209	1	HORQUILLA	FORK	FOURCHETTE	D -CHASIS-123234
22	4432	1	PASADOR	PIN	GOUPILLE	
23	180108	1	TUERCA	NUT	ECROU	H -CHASIS-123233
24	178227	1	BULON PASADOR	BOLT-PIN	BOULON-GOUPILLE	

110705

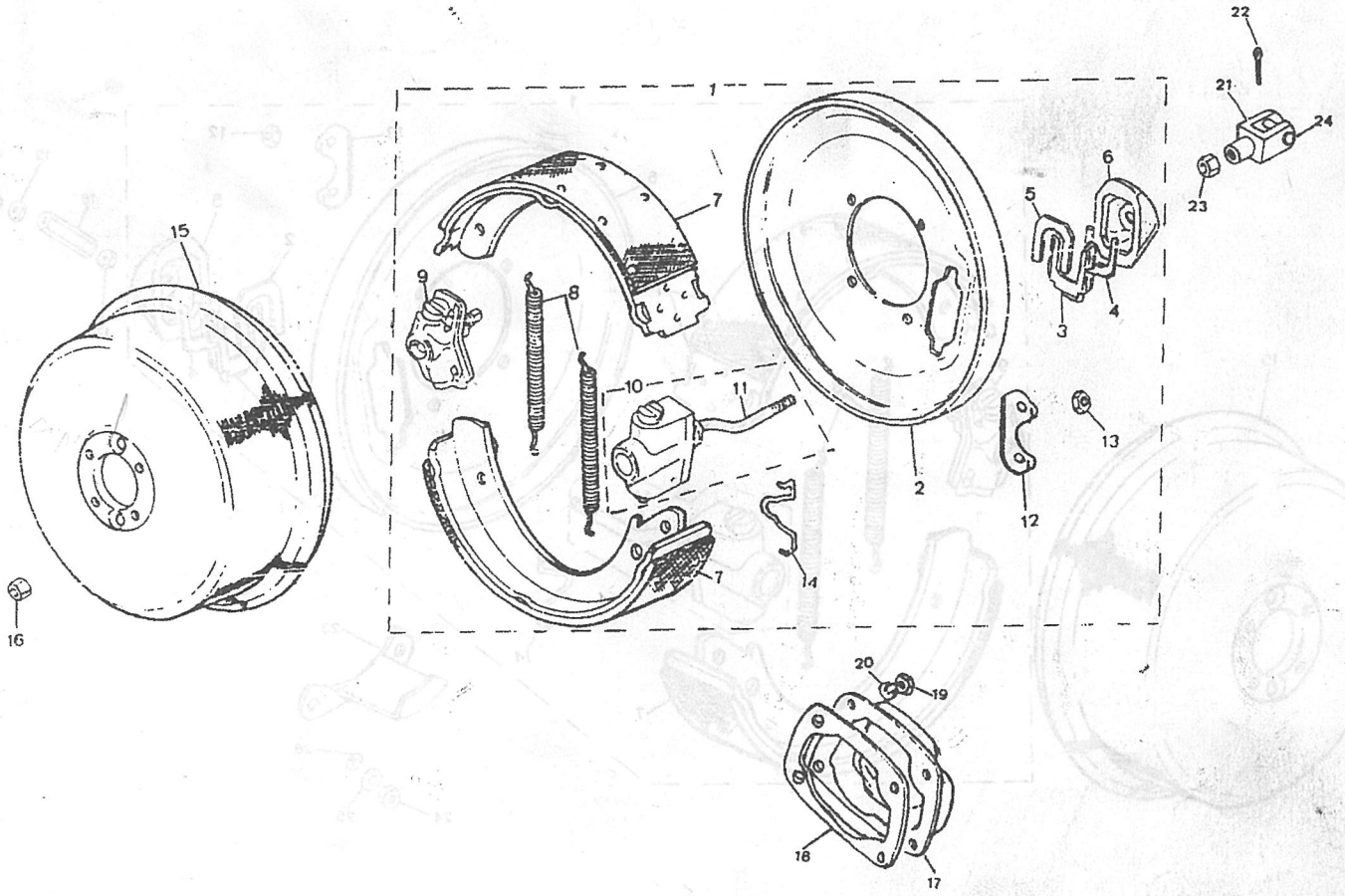

PUBLICACION N:790776 GRUPO-11 FRENOS SUBGRUPO-FRENO A LA TRANSMISI
EDICION N: 1 GROUP-11 BRAKES SUBGROUP-TRANSMISSION BRAKE
GROUPE-11 FREINS SUBGROUPE-FREIN SUR TRANSMISSI

N.FIG PLATE N.FIG	N.PIEZA PARTNUMBER N.PIECE	CAN QTY OUT	DENOMINACION	DESCRIPTION	DENOMINATION	OBSERVACIONES
1	175212	1	FRENO A LA TRANSMISI	TRANSMISSION BRAKE	FREIN SUR TRANSMISSI	
2	515468	1	HORQUILLA	FORK	FOURCHETTE	
3	515467	1	HORQUILLA	FORK	FOURCHETTE	
4	515470	1	HORQUILLA	FORK	FOURCHETTE	
5	515466	1	GUARDAPOLVOS	DUST COVER	CAPUCHON	
6	515365	1	PLACA DE ANCLAJE	ANCHOR PLATE	PLATEAN DE FREIN	
7	GBS552	1	JUEGO DE 2 ZAPATAS	SHOE ASSY BOXED PAIR	ENS DE DEUX MACHOIRE	
8	515465	2	MUELLE	SPRING	RESSORT	
9	515925	1	UNIDAD REGULADORA	ADJUSTED UNIT	BOITIER DE REGLEUR	
10	790817	1	UNIDAD EXPANSORA	EXPANDER UNIT	BOITIER DE EXPANSION	
11	790818	1	VARILLA	ROD	TRINGLE	
12	254800	2	TUERCA	NUT	ECROU	
13	524515	1	PLACA	PLATE	PLAQUE	
14	515927	1	MUELLE	SPRING	RESSORT	
15	274423K1	1	TAMBOR DE FRENO	BRAKE DUM	TAMBOUR DE FREIN	
16	180138	3	TUERCA	NUT	ECROU	
17	187135	1	TUERCA ROSCADA IZQUI	LEFT SCREW NUT	ECROU FILETAGE A GOS	H -CHASIS-123233
18	175211	1	TUERCA DE REGLAJE	ADJUSTING NUT	ECROU DE REGLAGE	H -CHASIS-123233
19	180108	1	TUERCA	NUT	ECROU	H -CHASIS-123233
20	178227	1	BULON PASADOR	BOLT-PIN	BOULON-GOUPILLE	
21	4432	1	PASADOR	PIN	GOUPILLE	
22	176283	1	HORQUILLA	FORK	FOURCHETTE	H -CHASIS-123233
	177209	1	HORQUILLA	FORK	FOURCHETTE	D -CHASIS-123234
23	121396	1	DEFLECTOR	OIL DEFLECTOR	CHICANE D'HUILE	
24	180107	4	TUERCA	NUT	ECROU	
25	4574	2	ARANDELA PLANA	PLAIN WASHER	RONDELLE PLANE	
26	180426	4	ARANDELA MUELLE	SPRING WASHER	RONDELLE RESSORT	

410712

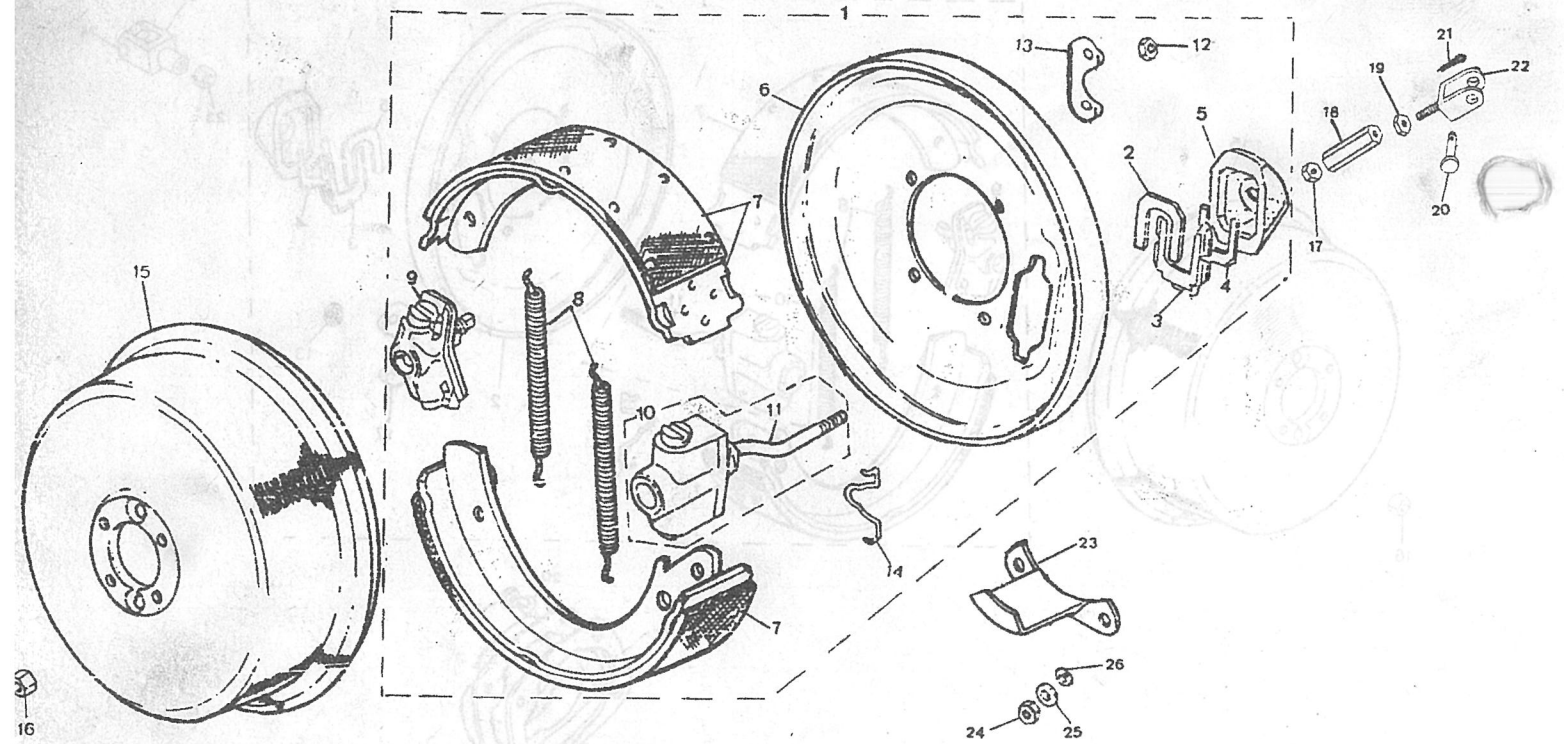

PUBLICACION N:790776 GRUPO=11 FRENOS SUBGRUPO=DEPRESOR
EDICION N: 1 GROUP=11 BRAKES SUBGROUP=VACUUM
GROUPE=11 FREINS SUBGROUPE=DEPRESEUR

N.FIG PLATE N.FIG	N.PIEZA PARTNUMBER N.PIECE	CAN QTY OUT	DENOMINACION	DESCRIPTION	DENOMINATION	OBSERVACIONES
1	176252	1	DEPRESOR AUTOPLAS	VACUUM AUTOPLAS	DEPRESOR AUTOPLAS	
2	194086	1	JUEGO DE REPARACION	REPAIR KIT	JEU DE REPARATION	
3	194346	1	POLEA	PULLEY	POULIE	
4	711644	1	CORREA	BELT	COURRIE	
5	176281	1	SOPORTE DEPRESOR	VACUUM BRACKET	SUPPORT DEPRESOR	
6	176259	1	TENSOR	ADJUSTING LINK	TENDEUR	
7	182103	1	TORNILLO	BOLT	BOULON	
8	WM108001	1	ARANDELA MUELLE	SPRING WASHER	RONDELLE RESSORT	
9	587405	1	ARANDELA PLANA	PLAIN WASHER	RONDELLE PLANE	
10	181181	1	TUERCA	NUT	ECROU	
11	185100	1	TORNILLO	BOLT	BOULON	
12	WM108001	1	ARANDELA MUELLE	SPRING WASHER	RONDELLE RESSORT	
13	181181	1	TUERCA	NUT	ECROU	
14	SH108251	3	TORNILLO	BOLT	BOULON	
15	WM108001	3	ARANDELA MUELLE	SPRING WASHER	RONDELLE RESSORT	
16	188408	1	CLIP	CLIP	CLIP	
17	175285	1	CALDERIN DE VACIO	AIR CONTAINER	CHAUDIERE DE AIR	
18	112983	1	TUBERIA	PIPE	TUYAU	
19	165385	3	TUBERIA	PIPE	TUYAU	
20	G04137	8	ABRAZADERA	CLAMP	ETRIER	
21	592443	1	"T" DE DERIVACION	"T" OF DERIVATION	"T" DE DERIVATION	
22	78227	4	TORNILLO	BOLT	BOULON	

110909

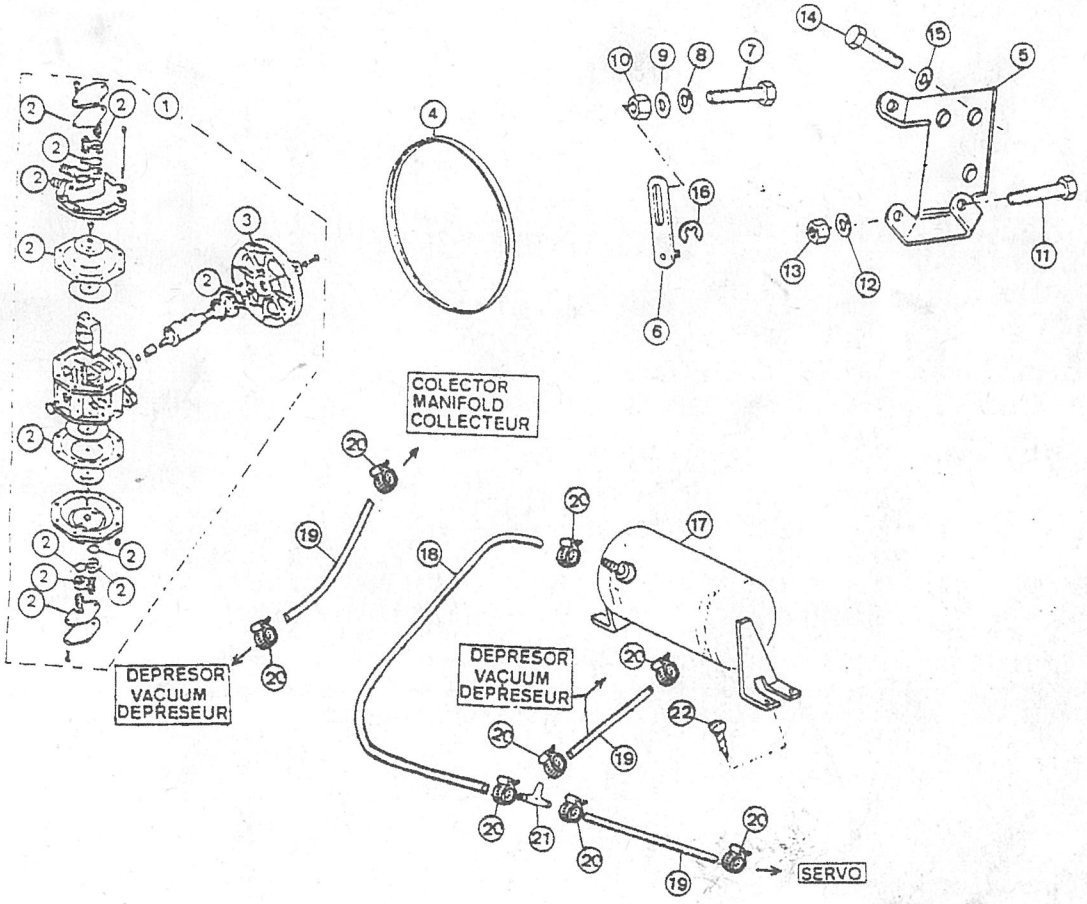

FUNCTIONAL DIAGRAM
FIG. NUM #1 :

GROUP-1: FRAME
GROUP-11 FRAME
GROUP-11 FRAME

SUSPENSION-DEPRESSOR
SUSPENSION-VACUUM
SUSPENSION-DEPRESSOR

PLATE NO. / N.PIECE	N.PIECE / PART NUMBER / N.PIECE	QTY IN / QTY OUT	DENOMINATION	DESCRIPTION	DENOMINATION	OBSERVATIONS
1	176232	1	DEPRESSOR AUTOPLAS	VACUUM AUTOPLAS	DEPRESSOR AUTOPLAS	
2	190086	1	JUEGO DE REPARACION	REPAIR KIT	JEU DE REPARATION	
3	190126	1	POLEA	PULLEY	POULIE	
4	176840	1	CORREA	BELT	COURRIE	
5	176231	1	SOPORTE DEPRESOR	VACUUM BRACKET	SUPPORT DEPRESSOR	
6	176239	1	TENSOR	ADJUSTING LINK	TENDEUR	
7	182107	1	TORNILLO	BOLT	BOULON	
8	WH10800	1	ARANDELA MUELLE	SPRING WASHER	RONDELLE RESSORT	
9	182205	1	ARANDELA PLANA	PLAIN WASHER	RONDELLE PLANE	
10	181181	1	TUERCA	NUT	ECROU	
11	183108	1	TORNILLO	BOLT	BOULON	
12	WH10800	1	ARANDELA MUELLE	SPRING WASHER	RONDELLE RESSORT	
13	181181	1	TUERCA	NUT	ECROU	
14	BH10821	2	TORNILLO	BOLT	BOULON	
15	WH10800	2	ARANDELA MUELLE	SPRING WASHER	RONDELLE RESSORT	
16	188408	1	CLIP	CLIP	CLIP	
17	172285	1	CALEFACTOR DE VACIO	AIR CONTAINER	CHAUDIERE DE AIR	
18	112982	1	TUBERIA	PIPE	TUYAU	
19	165285	2	TUBERIA	PIPE	TUYAU	
20	004187	8	ABRAZADERA	CLAMP	ETRIER	
21	352445	1	"T" DE DERIVACION	"T" OF DERIVATION	"T" DE DERIVATION	
22	18227	4	TORNILLO	BOLT	BOULON	

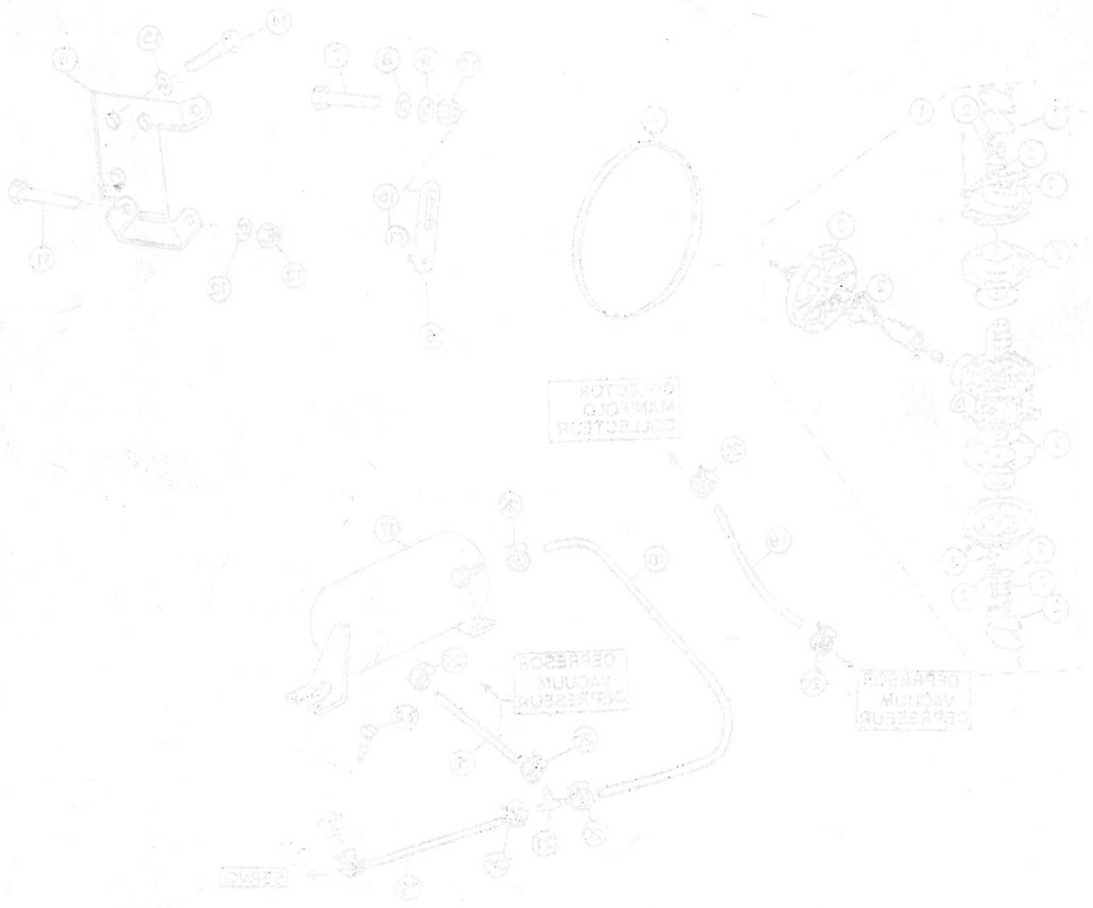

GRUPO 12 12 PANEL DE INSTRUME

GROUP 12 12 INSTRUMENT PANEL

GROUP 12 12 PANNEDUX ET INCIC

COMPOSICION.....COMPOSITION.....COMPOSICION

REFERENCIA PARTNUMBER NUM.PIECE	DENOMINACION	DESCRIPTION	DENOMINATION
120110	PANEL DE INSTRUMENTO	INSTRUMENT PANEL	PANNEAUX ET INDICATE
120116	PANEL DE INSTRUMENTO	INSTRUMENT PANEL	PANNEAUX ET INDICATE

PUBLICACION N:790776 GRUPO=12 PANEL DE INSTRUME SUBGRUPO=PANEL DE INSTRUMENTO
EDICION N: 1 GROUP=12 INSTRUMENT PANEL SUBGROUP=INSTRUMENT PANEL
GROUPE=12 PANNEDUX ET INCIC SUBGROUPE=PANNEAUX ET INDICATE

N.FIG PLATE N.FIG	N.PIEZA PARTNUMBER N.PIECE	CAN QTY OUT	DENOMINACION	DESCRIPTION	DENOMINATION	OBSERVACIONES
1	MTC5459	1	PANEL DE INSTRUMENTO	INSTRUMENT PANEL	PANNEAU D INSTRUMENT	
2	MUC7599	1	BASE DE PANEL INSTRU	BASE STIFFENER-PANEL	BASE D'APPUI PANNEAU	
3	MTC2808	1	CUBIERTA PANEL INSTR	COWL-INSTRUMENT PANE	COUVERCLE PANNEAU	
4	AB610081	5	TORNILLO	BOLT	BOULON	
5	08321A31056	5	ARANDELA MUELLE	SPRING WASHER	RONDELLE RESSORT	
6	3987	5	ARANDELA PLANA	PLAIN WASHER	RONDELLE PLANE	
7	CZA4705	5	TUERCA PLASTICO	LOCKUT	LUCK	
8	78121	4	TORNILLO	BOLT	BOULON	
9	AJ608041	4	TUERCA MUELLE	SPRING NUT	ECROU RESSORT	
10	127662	1	CABLE VELOCIMETRO	SPPEDOMETER CABLE	CABLE DE COMTERU DE	
11	185254	4	TORNILLO	BOLT	BOULON	
12	WF703084	4	ARANDELA SEGURIDAD	SHAKEPROOF WASHER	RONDELLE SECURITE	
13	730929	4	TUERCA MUELLE	SPRING NUT	ECROU RESSORT	
14	78227	1	TORNILLO	BOLT	BOULON	
15	239600	1	CLIP	CLIP	CLIP	
16	166659	1	VOLTIMETRO	VOLTMETER	VOLTMETER	
17	166658	1	INDICADOR TEMPE AGUA	TEMPERATURE WATER IN	INDICAT TEMPERAT EAU	
18	166660	1	INDICADOR NIVEL COMB	FUEL GANGE INDICATOR	INDICAT DE CARBURANT	
19	166768	1	VELOCIMETRO	SPPEDOMETER	CONTEUR DE VITESSE	2'5 C
20	166769	1	VELOCIMETRO	SPPEDOMETER	CONTEUR DE VITESSE	2'5 L-2'5 E
21	PRC5598	1	MODULO LAMPARAS CON	WARLING LAMP MODULE	MODULE DE LAMPES CON	
22	790247	1	CIRCUITO IMPRESO	PRINTED CIRCUIT	CIRCUIT IMPRIME	
23	166770	1	INTERRUPTOR CALEFACC	HEATING SWITCH	INTERRUP DE CHAUFFAG	
24	78924	3	TORNILLO	BOLT	BOULON	
25	054959	3	ARANDELA	WASHER	RONDELLE	
26	166655	1	INDICADOR PRESION AC	OIL PRESSURE INDICAT	INDIC PRESION D'HUIL	
27	790248	5	BOMBILLA 3W	BULB 3W	LAMPE 3W	
28	DRC1186	13	BOMBILLA 2W	BULB 2W	LAMPE 2W	
29	166531	1	INTERRUPTOR DE ARRAN	IGNITION SWITCH	COMMUTATEUR DE DEPAR	
30	194312	S-N	LLAVE EN BRUTO	KEY BLANK	CLEF RUSTIQUE	
31	37400A84420	1	MANDO DE LUCES	SWITCH FOR FLASHER	INTERRUPTEUR DE LUMI	
32	37400B84420	1	MANDO LIMPIAPARABRIS	WASH WIPE SWITCH	INTERRUP DE ESSUIE G	
33	06860	2	GOMA	RUBBER	CAOUTCHOUC	
34	189469	1	CLIP	CLIP	CLIP	
35	575395K1	1	CAJA DE FUSIBLES	FUSE BOX	BOITE DE FUSIBLES	
36	541572	6	FUSIBLE 20A	FUSE 20A	FUSIBLE 20A	
37	SP105204	2	TORNILLO	BOLT	BOULON	
38	WC105004	4	ARANDELA	WASHER	RONDELLE	
39	NH105041	2	TUERCA	NUT	ECROU	
40	346786	1	TAPA INSTRUMENTOS AU	COVER INSTRUMENTS	COUVERCLE INSTRUMENT	
41	730803	4	TORNILLO PLASTICO	PLASTIC SCREW	VIS EN PLASTIQUE	

20110

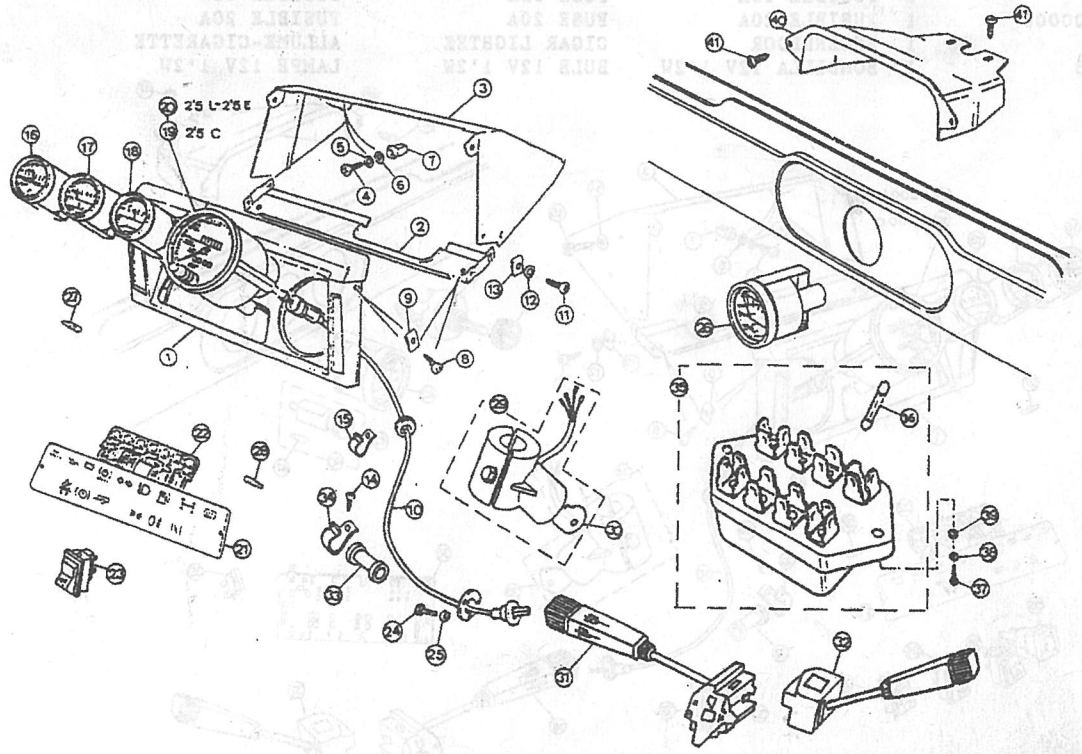

PUBLICACION N:790776 GRUPO-12 PANEL DE INSTRUME SUBGRUPO-PANEL DE INSTRUMENTO
EDICION N: 1 GROUP-12 INSTRUMENT PANEL SUBGROUP-INSTRUMENT PANEL
GROUPE-12 PANNEDUX ET INCIC SUBGROUPE-PANNEAUX ET INDICATE

N.FIG PLATE N.FIG	N.PIEZA PARTNUMBER N.PIECE	CAN QTY OUT	DENOMINACION	DESCRIPTION	DENOMINATION	OBSERVACIONES
1	MTC5459	1	PANEL DE INSTRUMENTO	INSTRUMENT PANEL	PANNEAU D INSTRUMENT	
2	MUC7599	1	BASE DE PANEL INSTRU	BASE STIFFENER-PANEL	BASE D'APPUI PANNEAU	
3	MTC2808	1	CUBIERTA PANEL INSTR	COWL-INSTRUMENT PANE	COUVERCLE PANNEAU	
4	AB610081	5	TORNILLO	BOLT	BOULON	
5	08321A31056	5	ARANDELA MUELLE	SPRING WASHER	RONDELLE RESSORT	
6	3987	5	ARANDELA PLANA	PLAIN WASHER	RONDELLE PLANE	
7	CZA4705	5	TUERCA PLASTICO	LOCKUT	LUCK	
8	78121	4	TORNILLO	BOLT	BOULON	
9	AJ608041	4	TUERCA MUELLE	SPRING NUT	ECROU RESSORT	
10	127649	1	CABLE VELOCIMETRO	SPPEDOMETER CABLE	CABLE DE COMTERU DE	
11	185254	4	TORNILLO	SCREW	VIS	
12	WF703084	4	ARANDELA SEGURIDAD	SHAKEPROOF WASHER	RONDELLE SECURITE	
13	730929	4	TUERCA MUELLE	SPRING NUT	ECROU RESSORT	
14	WA105001	2	ARANDELA	WASHER	RONDELLE	
15	SE105161	2	TORNILLO	BOLT	BOULON	
16	166659	1	VOLTIMETRO	VOLTMETER	VOLTMETER	
17	166658	1	INDICADOR TEMPE AGUA	TEMPERATURE WATER IN	INDICAT TEMPERAT EAU	
18	166660	1	INDICADOR NIVEL COMB	FUEL GANGE INDICATOR	INDICAT DE CARBURANT	
19	166657	1	VELOCIMETRO	SPPEDOMETER	CONTEUR DE VITESSE	2500 C
20	166678	1	VELOCIMETRO	SPPEDOMETER	CONTEUR DE VITESSE	2500 L
21	PRC5598	1	MODULO LAMPARAS CONT	WARLING LAMP MODULE	MODULE DE LAMPES CON	
22	790247	1	CIRCUITO IMPRESO	PRINTED CIRCUIT	CIRCUIT IMPRIME	
23	37280A80000	1	INTERRUPTOR ANTINIEB	ANTI-FOG SWITCH	INTERRUP ANTI-BUEE	
24	35003-00000	1	INTERRUPTOR LUNETA	GLASS CALORIF SWITCH	INTERRUP DE LUNETE T	
25	37400D84420	1	INTERRUPTOR EMERGENC	WARNING SWITCH	INTERRUP AVERT AVARI	
26	37400F84420	1	CONTROL LUCES EMERGE	WARNING LIGHTS CONTR	CONTROLE FEUX DE DET	
27	790248	5	BOMBILLA 3W	BULB 3W	LAMPE 3W	
28	DRC1186	13	BOMBILLA 2W	BULB 2W	LAMPE 2W	
29	533765	1	PLACA	PLATE	PLAQUE	
30	NY106041	1	TUERCA	NUT	ECROU	
31	WA106041	1	ARANDELA	WASHER	RONDELLE	
32	189469	1	CLIP	CLIP	CLIP	
33	06860	2	GOMA	RUBBER	CAOUTCHOUC	
34	166531	1	INTERRUPTOR DE ARRAN	IGNITION SWITCH	COMMUTATEUR DE DEPAR	
35	194312	S-N	LLAVE EN BRUTO	KEY BLANK	CLEF RUSTIQUE	
36	37400A84420	1	MANDO DE LUCES	SWITCH FOR FLASHER	INTERRUPTEUR DE LUMI	
37	37400B84420	1	MANDO LIMPIAPARABRIS	WASH WIPE SWITCH	INTERRUP DE ESSUIE G	
38	35160-00000	1	CIRCUITO IMPRESO	PRINTED CIRCUIT	CIRCUIT IMPRIME	
39	166630	5	FUSIBLE 5A	FUSE 5A	FUSIBLE 5A	
	166631	2	FUSIBLE 10A	FUSE 10A	FUSIBLE 10A	
	166663	6	FUSIBLE 15A	FUSE 15A	FUSIBLE 15A	
	35157-00000	1	FUSIBLE 20A	FUSE 20A	FUSIBLE 20A	
40	175730	1	ENCENDEDOR	CIGAR LIGHTER	ALLUME-CIGARETTE	
41	RTC3635	1	BOMBILLA 12V 1'2W	BULB 12V 1'2W	LAMPE 12V 1'2W	

120116

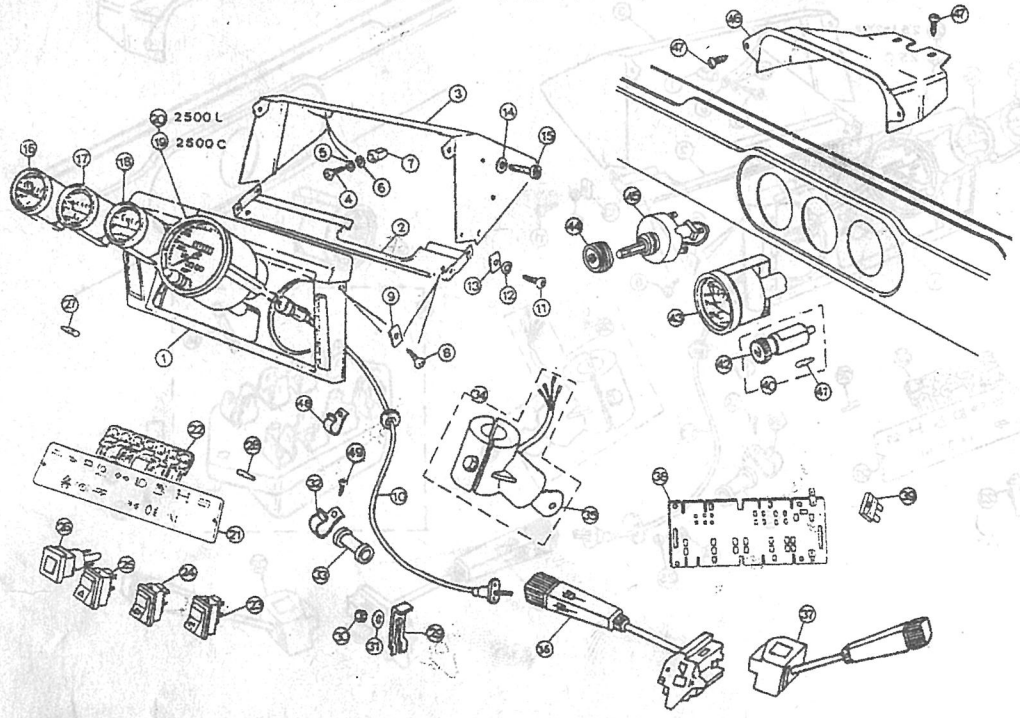

PUBLICACION N:790776 GRUPO=12 PANEL DE INSTRUME SUBGRUPO=PANEL DE INSTRUMENTO
EDICION N: 1 GROUP=12 INSTRUMENT PANEL SUBGROUP=INSTRUMENT PANEL
GROUPE=12 PANNEDUX ET INCIC SUBGROUPE=PANNEAUX ET INDICATE

N.FIG PLATE N.FIG	N.PIEZA PARTNUMBER N.PIECE	CAN QTY OUT	DENOMINACION	DESCRIPTION	DENOMINATION	OBSERVACIONES
42	790825	1	MANDO ENCENDEDOR	POPOUT UNIT	COMMANDE ALLUME-CIGA	
43	166655	1	INDICADOR PRESION AC	OIL PRESSURE INDICAT	INDIC PRESION D'HUIL	
44	PRC4454	1	MANDO INTERRUP LAVAC	KNOB-WASH WIPE SWITC	COMMANDE INTERRUP ES	
45	PRC4449	1	INTERR LAVACRIS TRAS	REAR WASH WIPE SWITC	INTERRUP ESSUIEGLAS	
46	346786	1	TAPA INSTRUMENTOS AU	COVER INTRUMENTS	COUVERCLE INSTRUMENT	
47	730803	4	TORNILLO DE PLASTICO	PLASTIC SCREW	VIS EN PLASTIQUE	
48	239600	1	CLIP	CLIP	CLIP	
49	78227	1	TORNILLO	BOLT	BOULON	

120116

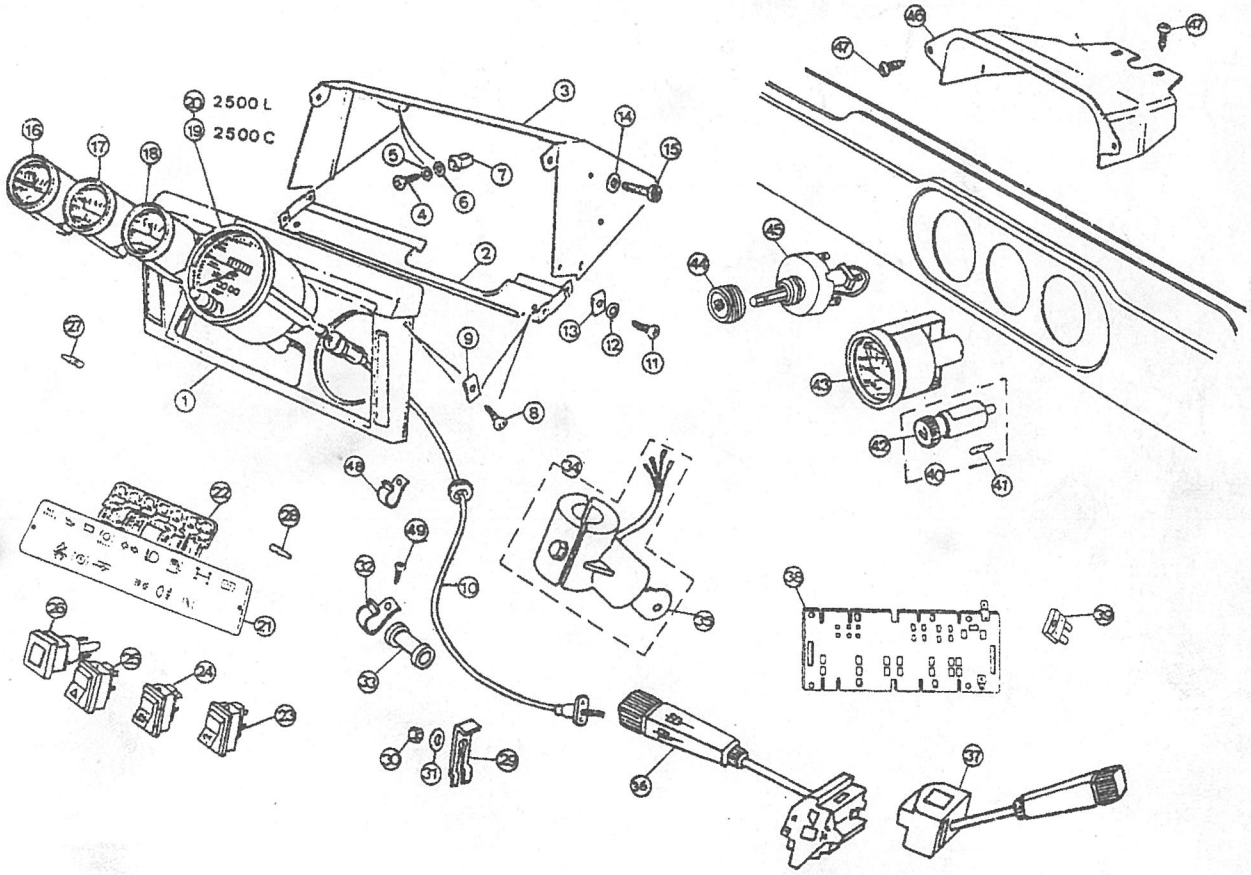

GRUPO 13 13 BASTIDOR Y SUSPEN

GROUP 13 13 FRAME AND SUSPENS

GROUP 13 13 CHASSIS ET SUSPEN

COMPOSICION.....COMPOSITION.....COMPOSICION

REFERENCIA PARTNUMBER NUM.PIECE	DENOMINACION	DESCRIPTION	DENOMINATION
130103	BASTIDOR	FRAME	CHASSIS
1301031	BASTIDOR	FRAME	CHASSIS
130105	BASTIDOR	FRAME	CHASSIS
1301051	BASTIDOR	FRAME	CHASSIS
13010511	BASTIDOR	FRAME	CHASSIS
130121	PARAGOLPES	BUMPER	PARE CHOC
130208	SOPORTES DE MOTOR	ENGINE SUPPORT	SUPPORT DE MOTEUR
130404	BALLESTA DELANTERA	FRONT SPRING	RESSORT AVANT
130438	BALLESTA DELANTERA	FRONT SPRING	RESSORT AVANT
130503	BALLESTA TRASERA	REAR SPRING	RESSORT ARRIERE
130519	BALLESTA TRASERA	REAR SPRING	RESSORT ARRIERE
1305191	BALLESTA TRASERA	REAR SPRING	RESSORT ARRIERE
130541	BALLESTA TRASERA	REAR SPRING	RESSORT ARRIERE
130550	BALLESTA TRASERA	REAR SPRING	RESSORT ARRIERE
130601	BARRA ESTABILIZ DELA	FRONT PANHARD ROD	BARRE DE STABIL AVAN
130613	BARRA ESTABILIZ TRAS	REAR PANHARD ROD	BARRE DE STABIL ARRI

GROUPE 13 - 13 SUSPENSION Y SUSPEN

GROUPE 13 13 FRAME AND CHASSIS

GROUPE 13 13 CHASSIS ET SUSPEN

COMPOSITION.....COMPOSITION.....COMPOSICION

REFERENCIA PARTNUMBER NUMERO	DENOMINATION	DESCRIPTION	DENOMINACION
130103	RASTIDOR	FRAME	CHASSIS
1301031	RASTIDOR	FRAME	CHASSIS
130103	RASTIDOR	FRAME	CHASSIS
1301031	RASTIDOR	FRAME	CHASSIS
1301031	RASTIDOR	FRAME	CHASSIS
130131	PARAGOLPES	BUMPER	PARA CHOC
130208	SOPORTES DE MOTOR	ENGINE SUPPORT	SUPPORT DE MOTEUR
130404	BALLESTA DELANTERA	FRONT SPRING	RESSORT AVANT
130410	BALLESTA DELANTERA	FRONT SPRING	RESSORT AVANT
130503	BALLESTA TRASERA	REAR SPRING	RESSORT ARRIERE
130519	BALLESTA TRASERA	REAR SPRING	RESSORT ARRIERE
1301519	BALLESTA TRASERA	REAR SPRING	RESSORT ARRIERE
130541	BALLESTA TRASERA	REAR SPRING	RESSORT ARRIERE
130530	BALLESTA TRASERA	REAR SPRING	RESSORT ARRIERE
130601	BARRA ESTABILIZ DELA	FRONT FARNARD ROD	BARRE DE STABIL AVAN
130615	BARRA ESTABILIZ TRAS	REAR FARNARD ROD	BARRE DE STABIL ARRI

PUBLICACION N:790776 GRUPO=13 BASTIDOR Y SUSPEN SUBGRUPO=BASTIDOR
EDICION N: 1 GROUP=13 FRAME AND SUSPENS SUBGROUP=FRAME
GROUPE=13 CHASSIS ET SUSPEN SUBGROUPE=CHASSIS

N.FIG PLATE N.FIG	N.PIEZA PARTNUMBER N.PIECE	CAN QTY OUT	DENOMINACION	DESCRIPTION	DENOMINATION	OBSERVACIONES
1	790217	1	BASTIDOR 2500C	FRAME 2500C	CHASSIS 2500C	
2	552457F1	1	TRAVESA/O	FRAME CROSSEMEMBER	TRAVERSE	
3	256051	4	TORNILLO	BOLT	BOULON	
4	2251	4	ARANDELA PLANA	PALIN WASHER	RONDELLE PLANE	
5	181170	4	TUERCA	NUT	ECRON	
6	589452	1	GOMA	RUBBER	CAOUTCHOUC	
7	78248	3	REMACHE	RIVET	RIVET	
8	09404A06402	3	ABRAZADERA	CLAMP	COLLIER	
9	141628	2	CORREA	DASH	COURROIE	
10	255047	8	TORNILLO	BOLT	BOULON	
11	2851	8	ARANDELA PLANA	PLAIN WASHER	RONDELLE PLANE	
12	180426	8	ARANDELA MUELLE	SPRING WASHER	RONDELLE RESSORT	
13	254812	8	TUERCA	NUT	ECROU	
14	241380	4	TOPE DE GOMA	BUMP RUBBER	COC DE CAOUTCHOUC	
15	252220	8	TUERCA	NUT	ECROU	
16	182113	8	TORNILLO	BOLT	BOULON	

130103

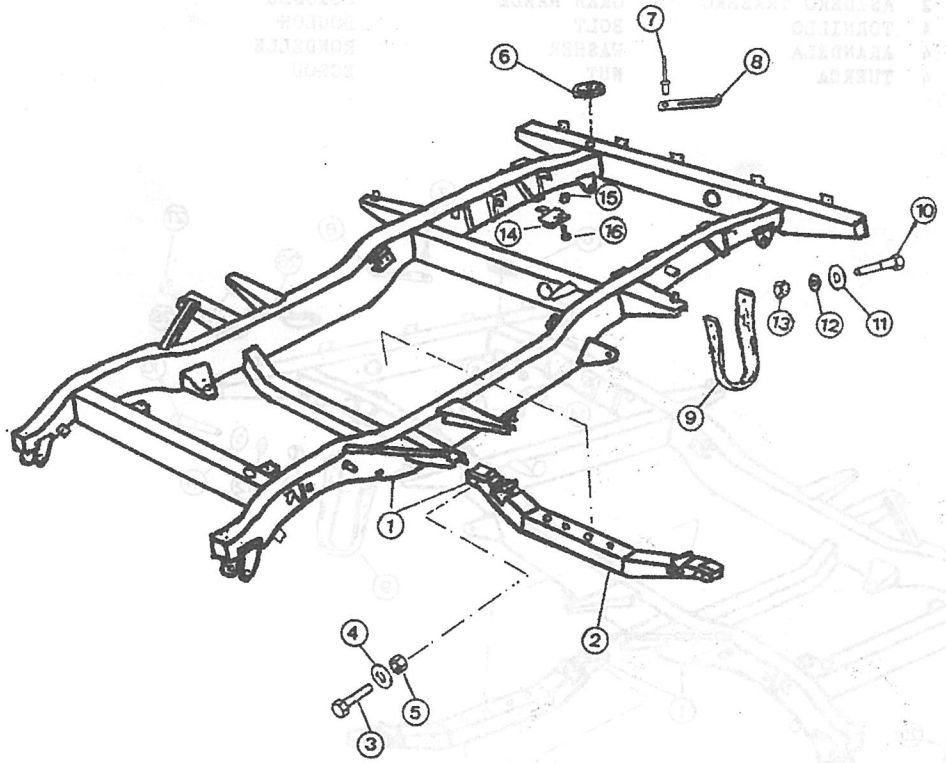

PUBLICACION N:790776 GRUPO=13 BASTIDOR Y SUSPEN SUBGRUPO=BASTIDOR
EDICION N: 1 GROUP=13 FRAME AND SUSPENS SUBGROUP=FRAME
GROUPE=13 CHASSIS ET SUSPEN SUBGROUPE=CHASSIS

N.FIG PLATE N.FIG	N.PIEZA PARTNUMBER N.PIECE	CAN QTY OUT	DENOMINACION	DESCRIPTION	DENOMINATION	OBSERVACIONES
1	790841	1	BASTIDOR	FRAME	CHASSIS	CON DIRECC.HIDRA
	790844	1	BASTIDOR	FRAME	CHASSIS	CON DIRECC.MECA.
2	552457F1	1	TRAVESA\O	FRAME CROSSEMEMBER	TRAVERSE	
3	256051	4	TORNILLO	BOLT	BOULON	
4	2251	4	ARANDELA PLANA	PLAIN WASHER	RONDELLE PLANE	
5	181170	4	TUERCA	NUT	ECROU	
6	589452	1	ARANDELA DE GOMA	RUBBER WASHER	RONDELLE DE CAOUTCHO	
7	78248	3	REMACHE	RIVET	RIVET	
8	09404A06402	3	ABRAZADERA	CLAMP	COLLIER	
9	141627	2	CORREA	DASH	COURROIE	
10	255047	8	TORNILLO	BOLT	BOULON	
11	2851	8	ARANDELA PLANA	PLAIN WASHER	RONDELLE PLANE	
12	180426	8	ARANDELA MUELLE	SPRING WASHER	RONDELLE RESSORT	
13	254812	8	TUERCA	NUT	ECROU	
14	241380	4	TOPE DE GOMA	BUMP RUBBER	COC DE CAOUTCHOUC	
15	252220	8	TUERCA	NUT	ECROU	
16	182113	8	TORNILLO	BOLT	BOULON	
17	148569	1	PARAGOLPES	BUMPER	PARE CHOC	
18	182112	2	TORNILLO	BOLT	BOULON	
19	3074	2	ARANDELA	WASHERLE	RONDELLE	
20	181184	2	TUERCA	NUT	ECROU	
21	256254	4	TORNILLO	BOLT	BOULON	
22	850641	4	ARANDELA	WASHER	RONDELLE	
23	850621	4	ARANDELA	WASHER	RONDELLE	
24	509751	4	TUERCA	NUT	ECROU	
25	730799	1	CHAPA MATRICULA	REGISTRATION PLAIN	PLAQUE POLICE	
26	164725	2	ASIDERO TRASERO	GRAB HANLE	POIGNEE	
27	182117	4	TORNILLO	BOLT	BOULON	
28	WM108001	4	ARANDELA	WASHER	RONDELLE	
29	181185	4	TUERCA	NUT	ECROU	

1301031

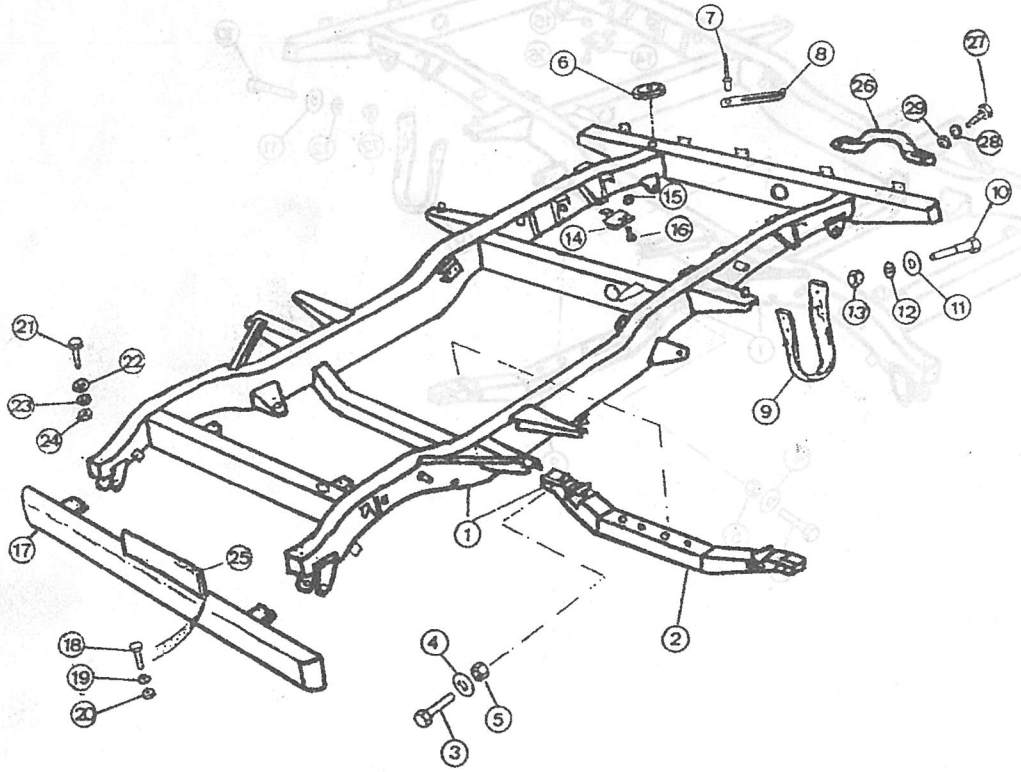

PUBLICACION N:790776 GRUPO=13 BASTIDOR Y SUSPEN SUBGRUPO=BASTIDOR
EDICION N: 1 GROUP=13 FRAME AND SUSPENS SUBGROUP=FRAME
GROUPE=13 CHASSIS ET SUSPEN SUBGROUPE=CHASSIS

N.FIG PLATE N.FIG	N.PIEZA PARTNUMBER N.PIECE	CAN QTY OUT	DENOMINACION	DESCRIPTION	DENOMINATION	OBSERVACIONES
1	790842	1	BASTIDOR	FRAME	CHASSIS	CON DIRECC.HIDRA
	790845	1	BASTIDOR	FRAME	CHASSIS	CON DIRECC.MECA.
2	148196	1	TRAVESA/O 2'5E-2'5L	FRAME CROS 2'5E-2'5L	TRAVERSE 2'5E-2'5L	
3	256051	4	TORNILLO	BOLT	BOULON	
4	2251	4	ARANDELA PLANA	PLAIN WASHER	RONDELLE PLANE	
5	181170	4	TUERCA	NUT	ECROU	
6	148569	1	PARAGOLPES	BUMPER	PARE CHOC	
7	730799	1	CHAPA MATRICULA	RESGISTRATION PLAIN	PLAQUE POLICE	
8	182112	2	TORNILLO	BOLT	BOULON	
9	3074	2	ARANDELA PLANA	PLAIN WASHER	RONDELLE PLANE	
10	181184	2	TUERCA	NUT	ECRON	
11	256254	4	TORNILLO	BOLT	BOULON	
12	850641	4	ARANDELA	WASHER	RONDELLE	
13	509751	4	TUERCA	NUT	ECROU	
14	241380	4	TOPE DE GOMA	BUMP RUBBER	CHOC DE CAOUTCHOUC	
15	182113	8	TORNILLO	BOLT	BOULON	
16	252220	8	TUERCA	NUT	ECRON	
17	141630	2	CORREA	DASH	COURROIE	
18	255047	8	TORNILLO	BOLT	BOULON	
19	2851	8	ARANDELA PLANA	PLAIN WASHER	RONDELLE PLANE	
20	180426	8	ARANDELA MUELLE	SPRING WASHER	RONDELLE RESSORT	
21	254812	8	TUERCA	NUT	ECROU	
22	164725	2	ASIDERO TRASERO	GRAB HANDLE	POIGNEE	
23	182117	4	TORNILLO	BOLT	BOULON	
24	WM108001	4	ARANDELA MUELLE	SPRING WASHER	RONDELLE RESSORT	
25	181185	4	TUERCA	NUT	ECRON	
26	850621	4	ARANDELA	WASHER	RONDELLE	
27	589452	1	ARANDELA DE GOMA	RUBBER WASHER	RONDELLE DE CAOUTCHO	
28	78248	3	REMACHE	RIVET	RIVET	
29	09404A06402	3	ABRAZADERA	CLAMP	COLLIER	

130105

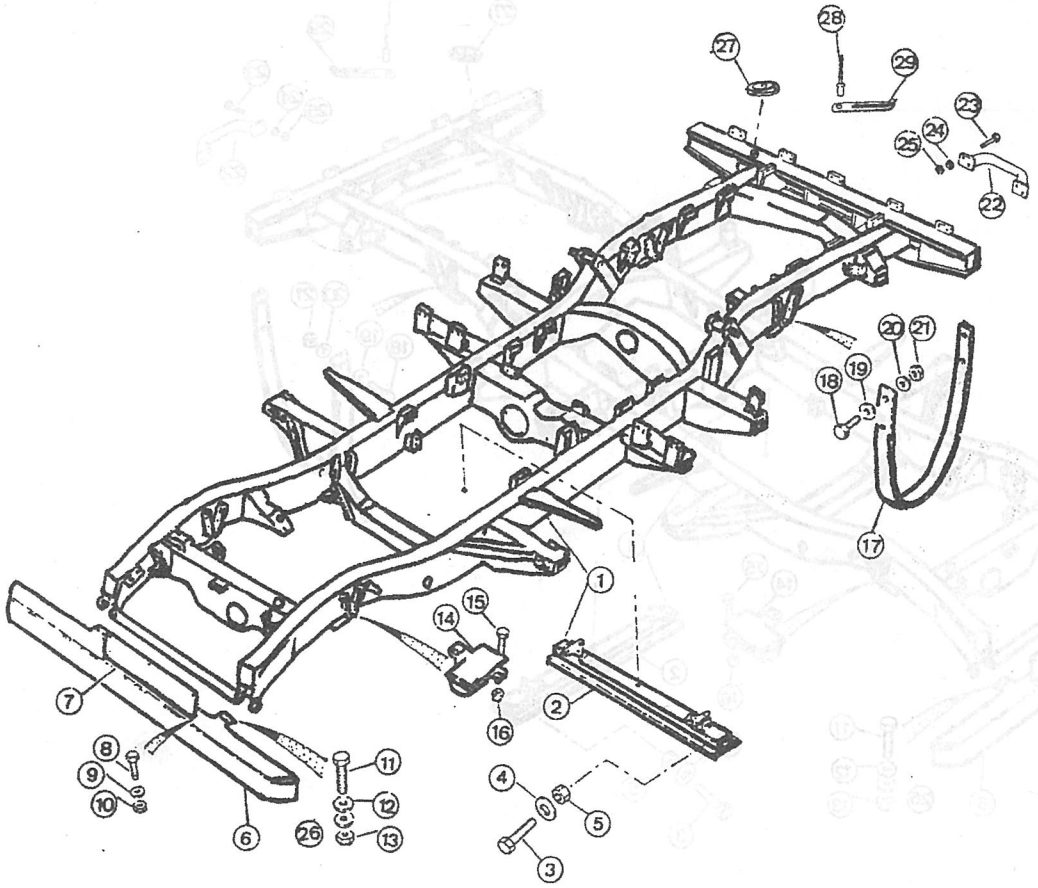

PUBLICACION N:790776 GRUPO-13 BASTIDOR Y SUSPEN SUBGRUPO-BASTIDOR
EDICION N: 1 GROUP-13 FRAME AND SUSPENS SUBGROUP-FRAME
GROUPE-13 CHASSIS ET SUSPEN SUBGROUPE-CHASSIS

N.FIG PLATE N.FIG	N.PIEZA PARTNUMBER N.PIECE	CAN QTY OUT	DENOMINACION	DESCRIPTION	DENOMINATION	OBSERVACIONES
1	790843	1	BASTIDOR	FRAME	CHASSIS	
2	148196	1	TRAVESA\O	FRAME CROSSEMEMBER	TRAVERSE	
3	256051	4	TORNILLO	BOLT	BOULON	
4	2251	4	ARANDELA PLANA	PLAIN WASHER	RONDELLE PLANE	
5	181170	4	TUERCA	NUT	ECROU	
6	148569	1	PARAGOLPES	BUMPER	PARE CHOC	
7	730799	1	CHAPA MATRICULA	REGISTRATION PLAIN	PLAQUE POLICE	
8	182112	2	TORNILLO	BOLT	BOULON	
9	3074	2	ARANDELA PLANA	PLAIN WASHER	RONDELLE PLANE	
10	181184	2	TUERCA	NUT	ECROU	
11	256254	4	TORNILLO	BOLT	BOULON	
12	850641	4	ARANDELA PLANA	PLAIN WASHER	RONDELLE PLANE	
13	509751	4	TUERCA	NUT	ECROU	
14	241380	4	TOPE DE GOMA	BUMP RUBBER	CHOC DE CAOUTCHOUC	
15	182113	8	TORNILLO	BOLT	BOULON	
16	252220	8	TUERCA	NUT	ECROU	
17	141630	2	CORREA	DASH	COURROIE	
18	255047	8	TORNILLO	BOLT	BOULON	
19	2851	8	ARANDELA PLANA	PLAIN WASHER	RONDELLE PLANE	
20	180426	8	ARANDELA MUELLE	SPRING WASHER	RONDELLE RESSORT	
21	254812	8	TUERCA	NUT	ECROU	
22	164725	2	ASIDERO TRASERO	GRAB HANDLE	POIGNEE	
23	182117	4	TORNILLO	BOLT	BOULON	
24	WM108001	4	ARANDELA MUELLE	SPRING WASHER	RONDELLE RESSORT	
25	181185	4	TUERCA	NUT	ECROU	
26	850621	4	ARANDELA PLANA	PLAIN WASHER	RONDELLE PLANE	
27	589452	1	ARANDELA GOMA	RUBBER WASHER	RONDELLE DE CAOUTCHO	
28	78248	3	REMACHE	RIVET	RIVET	
29	09404A06402	3	ABRAZADERA	CLAMP	COLLIER	

1301051

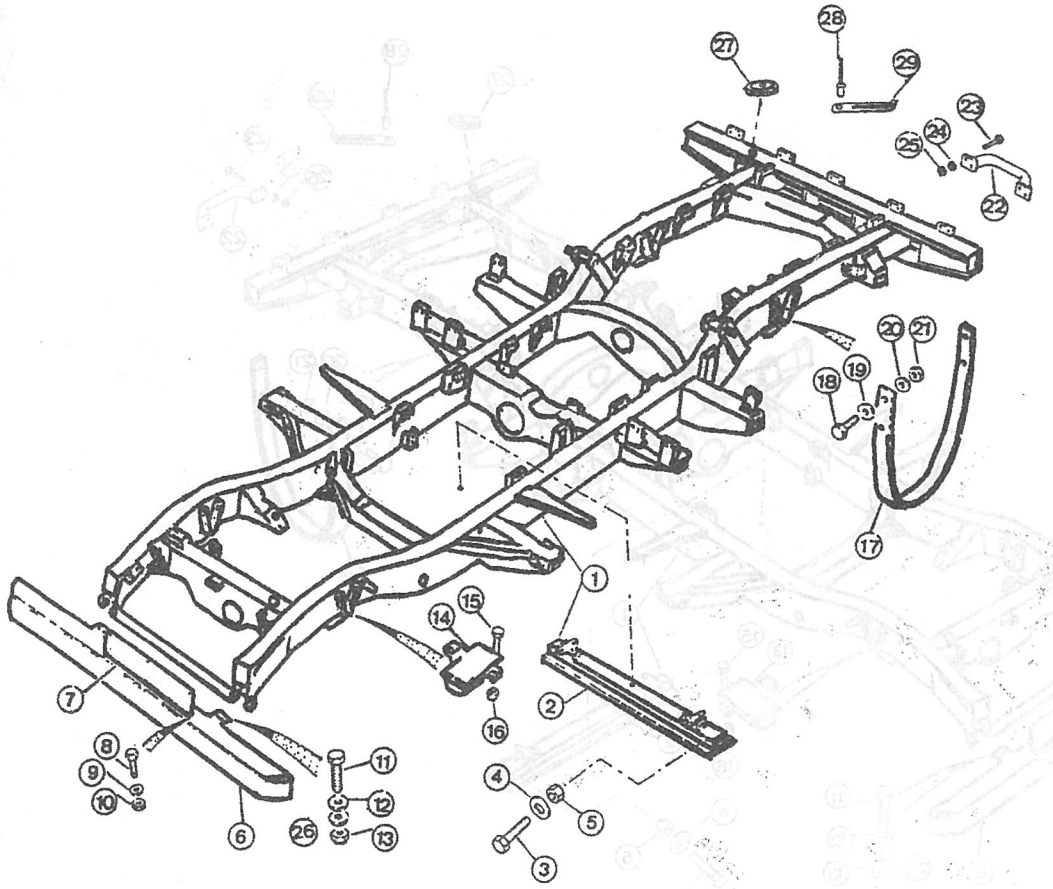

PUBLICACION N:790776 GRUPO=13 BASTIDOR Y SUSPEN SUBGRUPO=BASTIDOR
EDICION N: 1 GROUP=13 FRAME AND SUSPENS SUBGROUP=FRAME
GROUPE=13 CHASSIS ET SUSPEN SUBGROUPE=CHASSIS

N.FIG PLATE N.FIG	N.PIEZA PARTNUMBER N.PIECE	CAN QTY OUT	DENOMINACION	DESCRIPTION	DENOMINATION	OBSERVACIONES
1	790218	1	BASTIDOR	FRAME	CHASSIS	
2	148196	1	TRAVESA\O	FRAME CROSSEMBER	TRAVERSE	
3	256051	4	TORNILLO	BOLT	BOULON	
4	2251	4	ARANDELA PLANA	PLAIN WASHER	RONDELLE PLANE	
5	181170	4	TUERCA	NUT	ECROU	
6	589452	1	ARANDELA DE GOMA	RUBBER WASHER	RONDELLE DE CAOUTCHO	
7	78248	3	REMACHE	RIVET	RIVET	
8	09404A06402	3	ABRAZADERA	CLAMP	COLLIER	
9	141630	2	CORREA	DASH	COURROIE	
10	255047	8	TORNILLO	BOLT	BOULON	
11	2851	8	ARANDELA PLANA	PLAIN WASHER	RONDELLE PLANE	
12	180426	8	ARANDELA MUELLE	SPRING WASHER	RONDELLE RESSORT	
13	254812	8	TUERCA	NUT	ECROU	
14	241380	4	TOPE DE GOMA	BUMP RUBBER	CHOC DE CAOUTCHOUC	
15	182113	8	TORNILLO	BOLT	BOULON	
16	252220	8	TUERCA	NUT	ECROU	

13010511

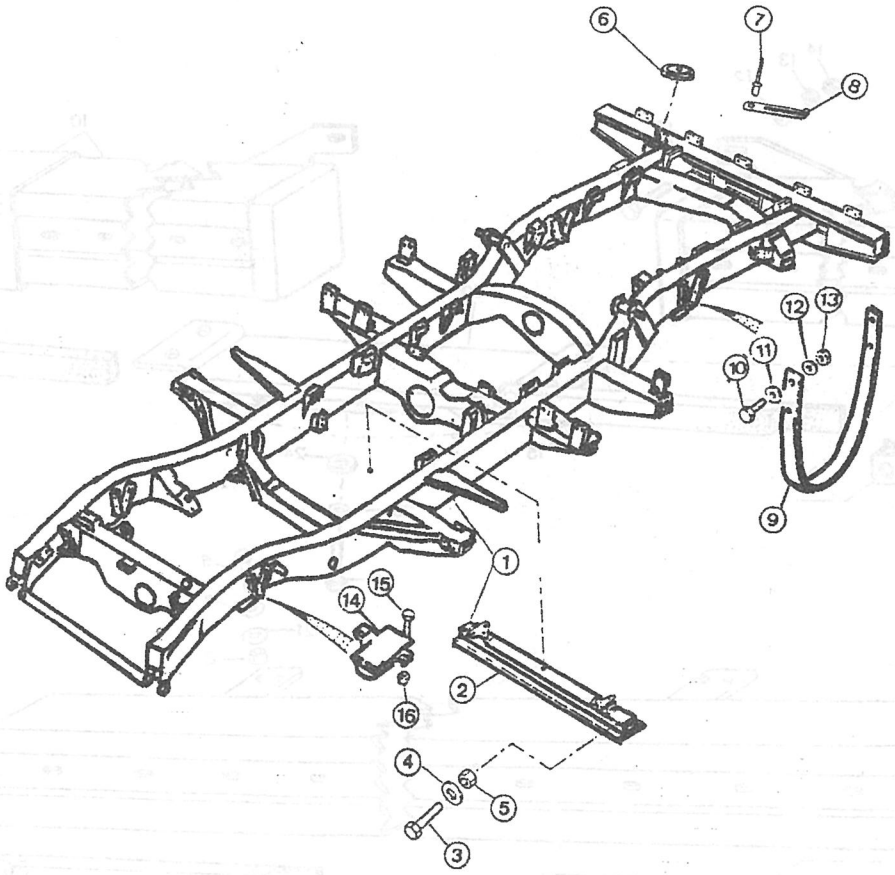

PUBLICACION N:790776 GRUPO=13 BASTIDOR Y SUSPEN SUBGRUPO=PARAGOLPES
EDICION N: 1 GROUP=13 FRAME AND SUSPENS SUBGROUP=BUMPER
GROUPE=13 CHASSIS ET SUSPEN SUBGROUPE=PARE CHOC

N.FIG PLATE N.FIG	N.PIEZA PARTNUMBER N.PIECE	CAN QTY OUT	DENOMINACION	DESCRIPTION	DENOMINATION	OBSERVACIONES
1	738016	1	PARAGOLPES DELANTERO	FRONT BUMPER	PARA CHOC AVANT	
2	206336	2	GOMA	RUBBER	CAOUTCHOUC	
3	184280	12	TUERCA	NUT	ECROU	
4	184230	12	ARANDELA	WASHER	RONDELLE	
5	3073	12	ARANDELA	WASHER	RONDELLE	
6	256254	4	TORNILLO	BOLT	BOULON	
7	850641	4	ARANDELA	WASHER	RONDELLE	
8	509751	4	TUERCA	NUT	ECROU	
9	206421	1	PARAGOLPES TRASEROLI	REAR BUMPER L H	PARE CHOC ARIERE CG	
10	206422	1	PARAGOLPES TRASEROLD	REAR BUMPER RH	PARE CHOC ARRIERE CD	
11	182118	4	TORNILLO	BOLT	BOULON	
12	2249	8	ARANDELA	WASHER	RONDELLE	
13	3075	4	ARANDELA	WASHER	RONDELLE	
14	181185	4	TUERCA	NUT	ECROU	
15	206337	2	GOMA	RUBBER	CAOUTCHOUC	
16	087212	4	TORNILLO	BOLT	BOULON	
17	3840	4	ARANDELA	WASHER	RONDELLE	
18	3074	4	ARANDELA	WASHER	RONDELLE	
19	184290	4	TUERCA	NUT	ECROU	
20	206344	1	ESTRIBO TRASERO	REAR STEP	ETIER ARRIERE	
21	850621	4	ARANDELA	WASHER	RONDELLE	
22	255045	3	TORNILLO	BOLT	BOULON	
23	180426	3	ARANDELA	WASHER	RONDELLE	
24	2210	3	ARANDELA	WASHER	RONDELLE	

130121

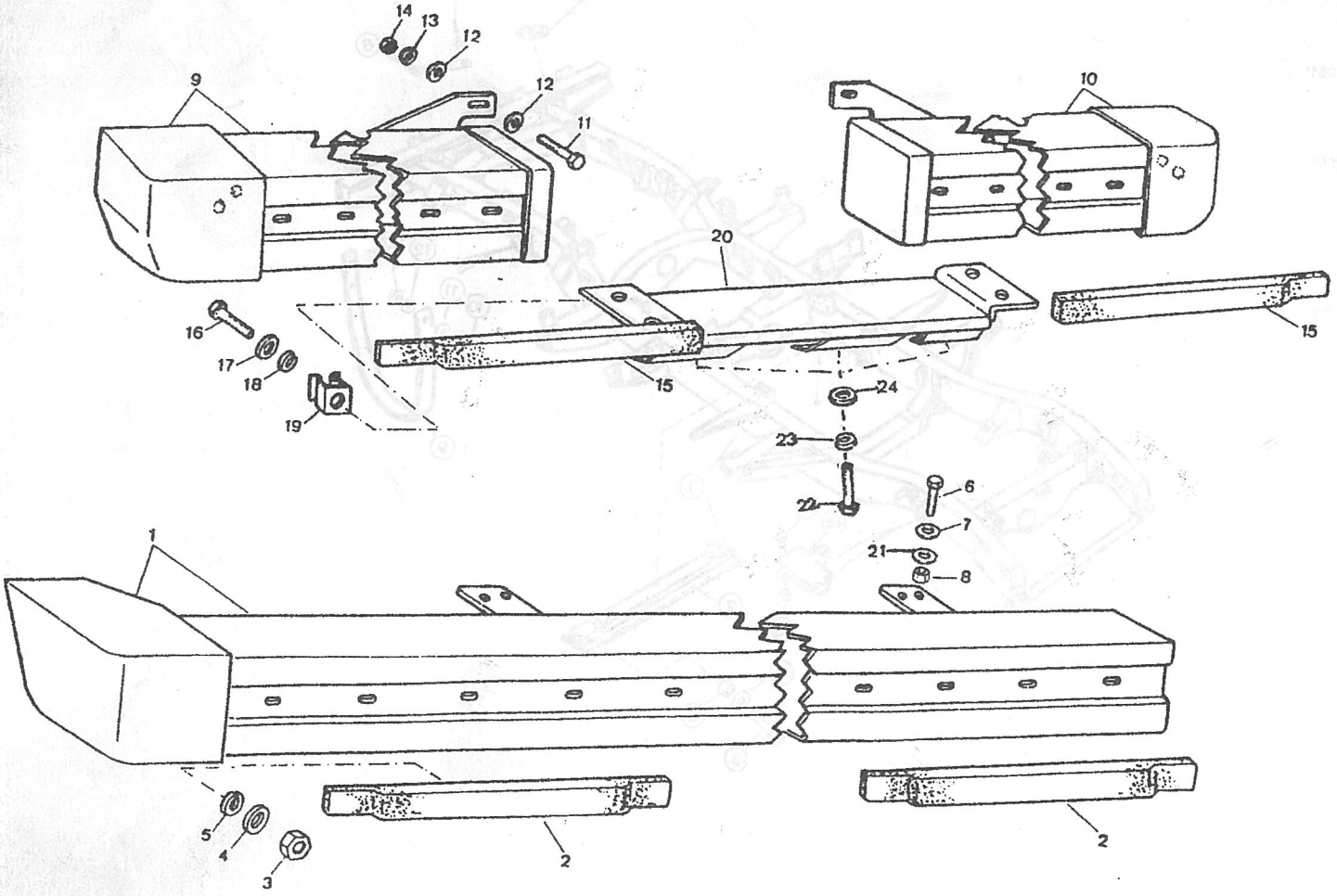

PUBLICACION N:790776 GRUPO=13 BASTIDOR Y SUSPEN SUBGRUPO=SOPORTES DE MOTOR
EDICION N: 1 GROUP=13 FRAME AND SUSPENS SUBGROUP=ENGINE SUPPORT
GROUPE=13 CHASSIS ET SUSPEN SUBGROUPE=SUPPORT DE MOTEUR

N.FIG PLATE N.FIG	N.PIEZA PARTNUMBER N.PIECE	CAN QTY OUT	DENOMINACION	DESCRIPTION	DENOMINATION	OBSERVACIONES
1	272501	1	SOPORTE LD	SUPPORT RH	SUPPORT CD	
2	272498	1	SOPORTE LI	SUPPORT LH	SUPPORT CG	
3	255047	4	TORNILLO	BOLT	BOULON	
4	2251	4	ARANDELA PLANA	PLAIN WASHER	RONDELLE PLANE	
5	180426	4	ARANDELA MUELLE	SPRING WASHER	RONDELLE RESSORT	
6	254812	4	TUERCA	NUT	ECROU	
7	NRC2052	4	SILENTBLOC	SUSPENSION RUBBER	SILENTBLOCK	
8	853035	4	TUERCA	NUT	ECROU	
9	810503	4	TUERCA	NUT	ECROU	
10	810003	4	ARANDELA MUELLE	SPRING WASHER	RONDELLE RESSORT	
11	850621	4	ARANDELA PLANA	PLAIN WASHER	RONDELLE PLANE	

130208

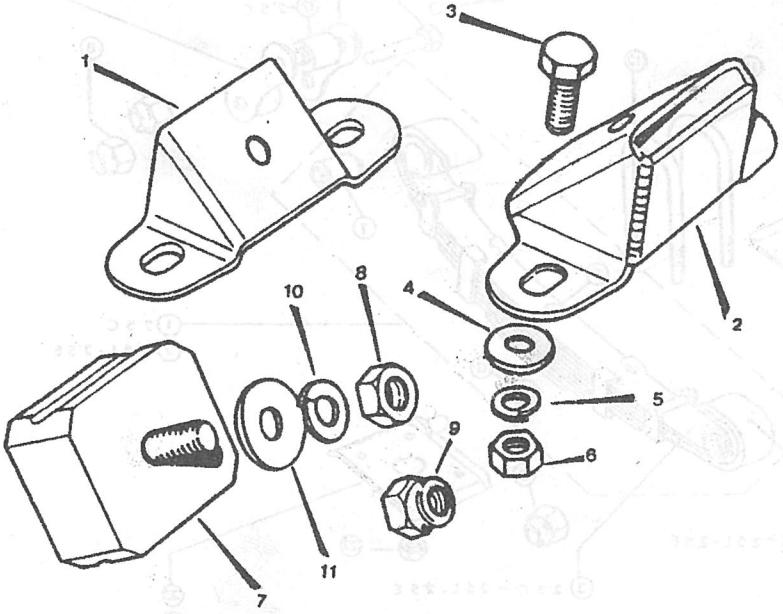

PUBLICACION N:790776 GRUPO=13 BASTIDOR Y SUSPEN SUBGRUPO=BALLESTA DELANTERA
EDICION N: 1 GROUP=13 FRAME AND SUSPENS SUBGROUP=FRONT SPRING
GROUPE=13 CHASSIS ET SUSPEN SUBGROUPE=RESSORT AVANT

N.FIG PLATE N.FIG	N.PIEZA PARTNUMBER N.PIECE	CAN QTY OUT	DENOMINACION	DESCRIPTION	DENOMINATION	OBSERVACIONES
1	264563	1	BALLESTA DELANTER LD	FRONT SPRING RH	RESSORT AVANT CD	2'5 CORTO
	276034	1	BALLESTA DELANTE.L/I	FRONT SPRING LH	RESSORT AVANT CG	2'5 CORTO
2	265627	1	BALLESTA DELANTER LD	FRONT SPRING RH	RESSORT AVANT CD	2'5 L-2'5 E
	276034	1	BALLESTA DELANTER LI	FRONT SPRING LH	RESSORT AVANT CG	2'5 L-2'5 E
3	265459	2	HOJA MAESTRA	MAIN LEAF	LAME MAITRESSE	
4	265460	2	HOJA SEGUNDA	2 AND LEAF	2 EME LAME	
5	189464	2	TORNILLO 57 MM M8	BOLT 57 MM M8	BOULON 57 MM M8	
6	NY108041	2	TUERCA	NUT	ECROU	
7	233573	4	CASQUILLO	BUSH	BAGUE	
8	252165	6	TUERCA	NUT	ECROU	
9	537743	2	TORNILLO	BOLT	BOULON	
10	NRC3472	2	PLACA	PLATE	PLAQUE	
11	NRC3882F1	3	ABARCON CORTO	SHORT "U"BOLT	BRICE COURT	
12	NRC3888K1	1	ABARCON LARGO	LONG "U" BOLT	BRIDE LONG	
13	537742	4	TORNILLO	BOLT	BOULON	
14	270520	2	PLACA LISA	PLAIN PLATE	PLAQUE LISSE	2'5 CORTO
15	147685	2	PLACA LISA	PLAIN PLATE	PLAQUE LISSE	2'5 L-2'5 E
16	577434 ZA-4-6	2	CASQUILLO	BUSH	BAGUE	2'5 L-2'5 E
17	569746 ZA-4-6	2	CASQUILLO	BUSH	BAGUE	2'5 CORTO
18	537687E1	2	PLACA ROSCADA	SCREWED PLATE	PLAQUE AVEC SPIRALE	2'5 CORTO
19	147684	2	PLACA ROSCADA	SCREWED PLATE	PLAQUE AVEC SPIRALE	2'5 L-2'5 E
20	NRC3891F2	1	PLACA L/D	PLATE RH	PLAQUE CD	
21	NRC3892F2	1	PLACA L/I	PLATE LH	PLAQUE CG	
22	810502	8	TUERCA	NUT	ECROU	
23	168700	2	AMORTIGUADOR	SHOCK ABSORBER	AMORTISSEUR	2'5 CORTO
	168744	2	AMORTIGUADOR	SHOCK ABSORBER	AMORTISSEUR	2'5 C (REFORZADO
24	167796	2	AMORTIGUADOR	SHOCK ABSORBER	AMORTISSEUR	2'5 L-2'5 E
	168723	2	AMORTIGUADOR	SHOCK ABSORBER	AMORTISSEUR	2'5L-2'5E (REFOR.
25	243057E2	8	GOMA	RUBBER	CAOUTCHOUC	
26	264024	4	ARANDELA PLANA	PLAIN WASHER	RONDELLE PLANE	
27	4063	4	PASADOR	PIN	GOUPILLE	

130404

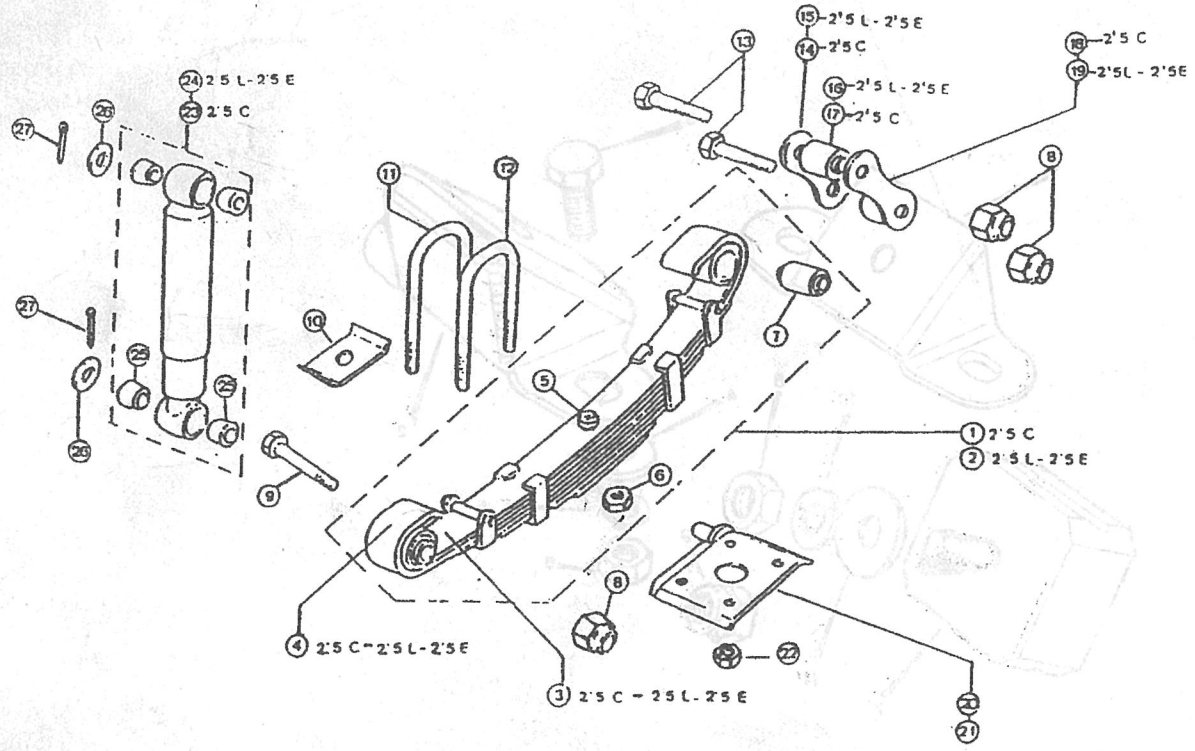

PUBLICACION N:790776 GRUPO=13 BASTIDOR Y SUSPEN SUBGRUPO=BALLESTA DELANTERA
EDICION N: 1 GROUP=13 FRAME AND SUSPENS SUBGROUP=FRONT SPRING
GROUPE=13 CHASSIS ET SUSPEN SUBGROUPE=RESSORT AVANT

N.FIG PLATE N.FIG	N.PIEZA PARTNUMBER N.PIECE	CAN QTY OUT	DENOMINACION	DESCRIPTION	DENOMINATION	OBSERVACIONES
1	163767	1	BALLESTA DELANTER LI	FRONT SPRING LH	RESSORT AVANT CG	2500 CORTO
	163768	1	BALLESTA DELANTER LD	FRONT SPRING RH	RESSORT AVANT CD	2500 CORTO
2	169795	1	BALLESTA DELANTER LI	FRONT SPRING LH	RESSORT AVANT CG	2500 LARGO
	169796	1	BALLESTA DELANTER LD	FRONT SPRING RH	RESSORT AVANT CD	2500 LARGO
3	233573	4	CASQUILLO	BUSH	BAGUE	
4	194636	6	PLACA	PLATE	PLAQUE	
5	163714	2	TORNILLO M8	BOLT M8	BOULON M8	
6	194395	2	TUERCA M8	NUT M8	ECROU M8	
7	194393	4	BRIDA	FLANGE	BRIDE	
8	194394	4	REMACHE	RIVET	RIVET	
9	147685	2	PLACA LISA	PLAIN PLATE	PLAQUE LISSE	2500 L
10	270520	2	PLACA LISA	PLAIN PLATE	PLAQUE LISSE	2500 C
11	569746	2	CASQUILLO	BUSH	BAGUE	2500 C
12	577434	2	CASQUILLO	BUSH	BAGUE	2500 L
13	537687E1	2	PLACA ROSCADA	SCREWED PLATE	PLAQUE AVEC SPIRALE	2500 C
14	147684	2	PLACA ROSCADA	SCREWED PLATE	PLAQUE AVEC SPIRALE	2500 L
15	537742	4	TORNILLO	BOLT	BOULON	
16	252165	6	TUERCA	NUT	ECROU	
17	NRC3895F1	1	PLACA LD	PLATE RH	PLAQUE CD	2500 C
	NRC3896F1	1	PLACA LI	PLATE LH	PLAQUE CG	2500 C
18	NRC3891F2	1	PLACA LD	PLATE RH	PLAQUE CD	2500 L
	NRC3892F2	1	PLACA LI	PLATE LH	PLAQUE CG	2500 L
19	810502	8	TUERCA	NUT	ECROU	
20	164722	1	ABARCON LARGO	LONG "U" BOLT	BRIDE LONG	
21	162783	3	ABARCON CORTO	SHORT "U" BOLT	BRIDE COURT	
22	NRC3472	2	PLACA	PLATE	PLAQUE	
23	537743	2	TORNILLO	BOLT	BOULON	
24	162792	2	AMORTIGUADOR	SHOCK ABSORBER	AMORTISSEUR	2500 C
25	169799	2	AMORTIGUADOR	SHOCK ABSORBER	AMORTISSEUR	2500 L
26	243057E2	8	GOMA	RUBBER	CAOUTCHOUC	
27	264024	4	ARANDELA PLANA	PLAIN WASHER	RONDELLE PLANE	
28	4063	4	PASADOR	PIN	GOUPILLE	

130438

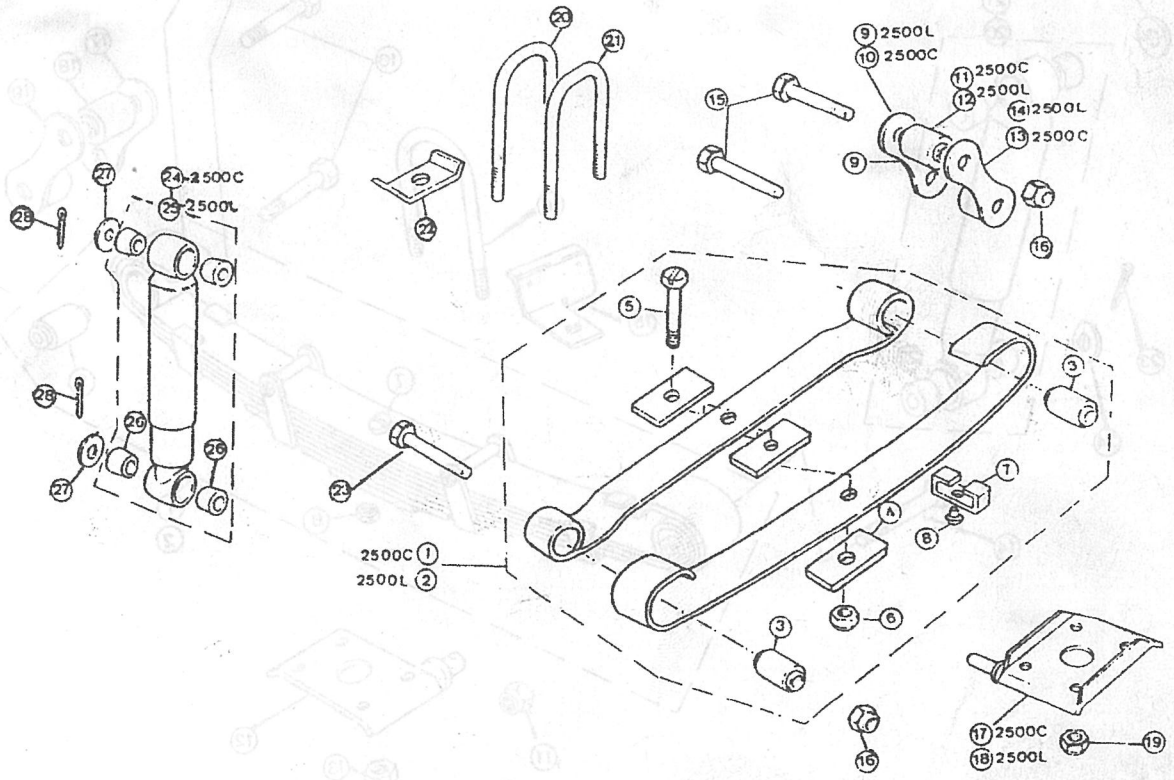

PUBLICACION N:790776 GRUPO=13 BASTIDOR Y SUSPEN SUBGRUPO=BALLESTA TRASERA
EDICION N: 1 GROUP=13 FRAME AND SUSPENS SUBGROUP=REAR SPRING
GROUPE=13 CHASSIS ET SUSPEN SUBGROUPE=RESSORT ARRIERE

N.FIG PLATE N.FIG	N.PIEZA PARTNUMBER N.PIECE	CAN QTY OUT	DENOMINACION	DESCRIPTION	DENOMINATION	OBSERVACIONES
1	517588	1	BALLESTA TRASERA LI	REAR SPRING LH	RESSORT ARRIERE CG	BASICA
	517589	1	BALLESTA TRASERA LD	REAR SPRING RH	RESSORT ARRIERE CD	BASICA
2	272967	1	BALLESTA TRASERA L/I	REAR SPRING LH	RESSORT ARRIERE CG	REFORZADA
	272968	1	BALLESTA TRASERA L/D	REAR SPRING RH	RESSORT ARRIERE CD	REFORZADA
3	243123E2	2	HOJA MAESTRA	MAIN LEAF	LAME MAITRESSE	BASICA
4	537964	2	HOJA MAESTRA	MAIN LEAF	LAME MAITRESSE	REFORZADA
5	243124E2	2	HOJA SEGUNDA	2 AND LEAF	2 EME LAME	BASICA
6	537966	2	HOJA SEGUNDA	2 AND LEAF	2 EME LAME	REFORZADA
7	189463	2	TORNILLO	BOLT	BOULON	
8	810503	2	TUERCA	NUT	ECROU	
9	233573	4	CASQUILLO	BUSH	BAGUE	
10	537740	4	TORNILLO	BOLT	BOULON	
11	252165	6	TUERCA	NUT	ECROU	
12	NRC3897F1	1	PLACA L/D	PLATE RH	PLAQUE CD	
	NRC3898F1	1	PLACA L/I	PLATE LH	PLAQUE CG	
13	810502	8	TUERCA	NUT	ECROU	
14	537743	2	TORNILLO	BOLT	BOULON	
15	NRC3448	1	PLACA L/D	PLATE RH	PLAQUE CD	
	NRC3449	1	PLACA L/I	PLATE LH	PLAQUE CG	
16	NRC3885F1	4	ABARCON	"U"BOLT	BRIDE	
17	244162	2	PLACA LISA	PLAIN PLATE	PLACA LISSE	
18	233573	2	CASQUILLO	BUSH	BAGUE	
19	537686	2	PLACA ROSCADA	SCREWD PLATE	PLAQUE AVEC SPIRALE	
20	167799	2	AMORTIGUADOR	SHOCK ABSORBER	AMORTISSEUR	BASICO
21	168745	2	AMORTIGUADOR	SHOCK ABSORBER	AMORTISSEUR	REFORZADO
22	243057E2	8	GOMA	RUBBER	CAOUTCHOUC	
23	4063	4	PASADOR	PIN	GOUPILLE	
24	264024	4	ARANDELA	WASHER	RONDELLE	

130503

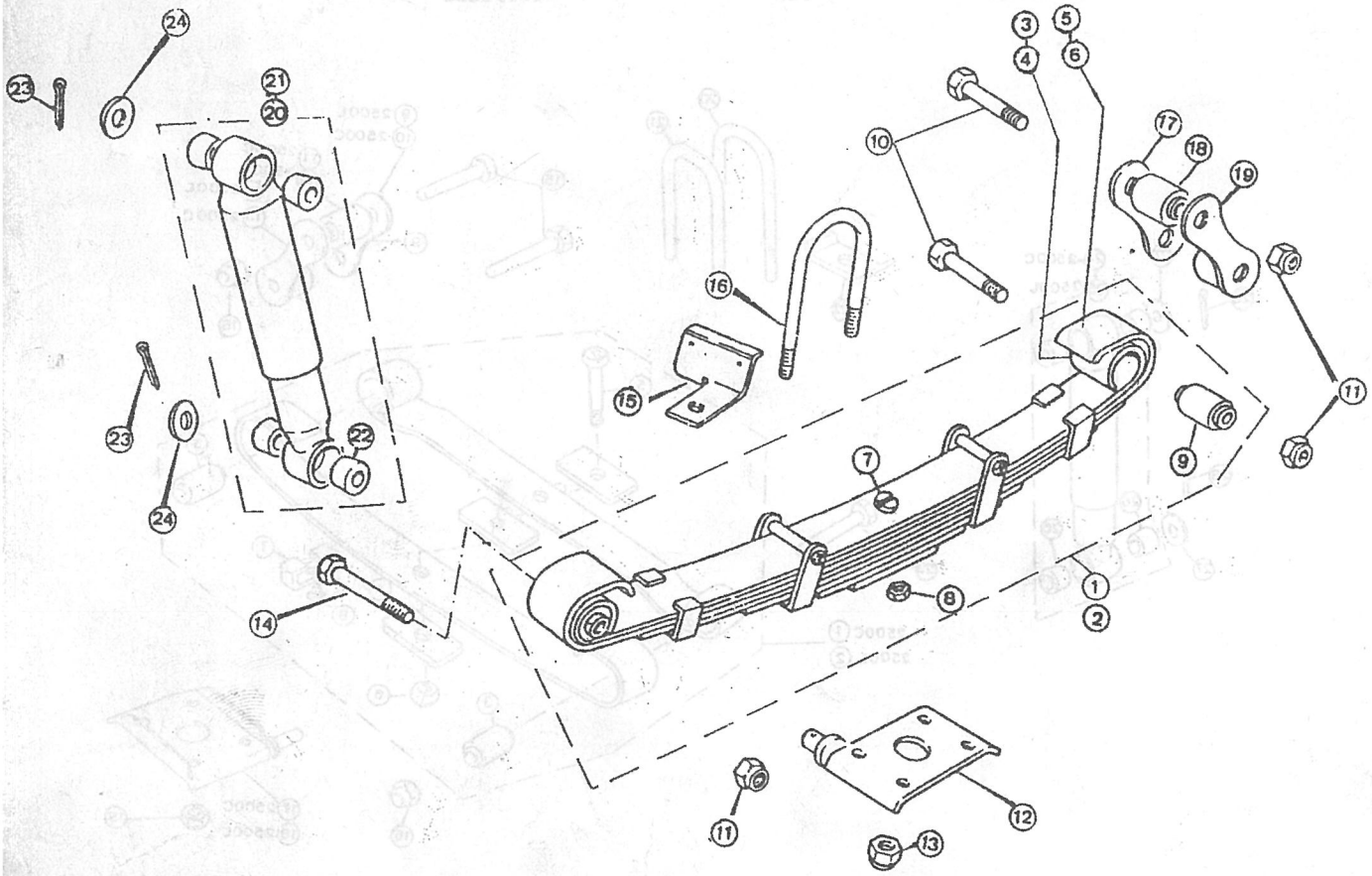

PUBLICACION N:790776 GRUPO=13 BASTIDOR Y SUSPEN SUBGRUPO=BALLESTA TRASERA
EDICION N: 1 GROUP=13 FRAME AND SUSPENS SUBGROUP=REAR SPRING
GROUPE=13 CHASSIS ET SUSPEN SUBGROUPE=RESSORT ARRIERE

N.FIG PLATE N.FIG	N.PIEZA PARTNUMBER N.PIECE	CAN QTY OUT	DENOMINACION	DESCRIPTION	DENOMINATION	OBSERVACIONES
1	279678	1	BALLESTA TRASERA LI	REAR SPRING LH	RESSORT ARRIERE CG	BASICA
	279679	1	BALLESTA TRASERA LD	REAR SPRING RH	RESSORT ARRIERE CD	BASICA
2	169728	1	BALLESTA TRASERA LD	REAR SPRING RH	RESSORT ARRIERE CD	REFORZADA
	169730	1	BALLESTA TRASERA LI	REAR SPRING LH	RESSORT ARRIERE CG	REFORZADA
3	501390E2	2	HOJA MAESTRA	MDIN LEAF	LAME MAITRESSE	BASICA
4	193909	2	HOJA MAESTRA	MAIN LEAF	LAME MAITRESSE	REFORZADA
5	501391E2	2	HOJA SEGUNDA	2 AND LEAF	2 EME LAME	BASICA
6	193910	2	HOJA SEGUNDA	2 AND LEAF	2 EME LAME	REFORZADA
7	189463	2	TORNILLO	BOLT	BOULON	
8	NY108041	2	TUERCA	NUT	ECROU	
9	233573	4	CASQUILLO	BUSH	BAGUE	
10	279970	2	PLACA LISA	PLAIN PLATE	PLAQUE LISSE	
11	233573	2	CASQUILLO	BUSH	BAGUE	
12	537685	2	PLAZCA ROSCADA	SCREWED PLATE	PLAQUE AVEC SPIRALE	
13	537740	4	TORNILLO	BOLT	OULON	
14	252165	6	TUERCA	NUT	ECROU	
15	162754	2	PLACA	PLATE	PLAQUE	
16	810502	8	TUERCA	NUT	ECROU	
17	NRC3885F1	4	ABARCON	"U" BOLT	BRIDE	BASICO
18	163789	4	ABARCON	"U" BOLT	BRIDE	REFORZADO
19	537741	2	TORNILLO	BOLT	BOULON	
20	NRC3448	1	PLACA L/D	PLATE RH	PLAQUE CD	
	NRC3449	1	PLACA L/I	PLATE LH	PLAQUE CG	
21	167795	2	AMORTIGUADOR	SHOCK ABSORBER	AMORTISSEUR	BASICO
22	168724	2	AMORTIGUADOR	SHOCK ABSORBER	AMORTISSEUR	REFORZADO
23	243057E2	4	GOMA	RUBBER	CAOUTCHOUC	
24	500746	4	ARANDELA	WASHER	RONDELLE	
25	508896E2	4	GOMA	RUBBER	CAOUTCHOUC	
26	508895	4	ARANDELA	WASHER	RONDELLE	
27	087914	2	TUERCA	NUT	ECROU	
28	088016	2	TUERCA	NUT	ECROU	
29	264024	2	ARANDELA	WASHER	RONDELLE	
30	4063	2	PASADOR	PIN	GOUPILLE	

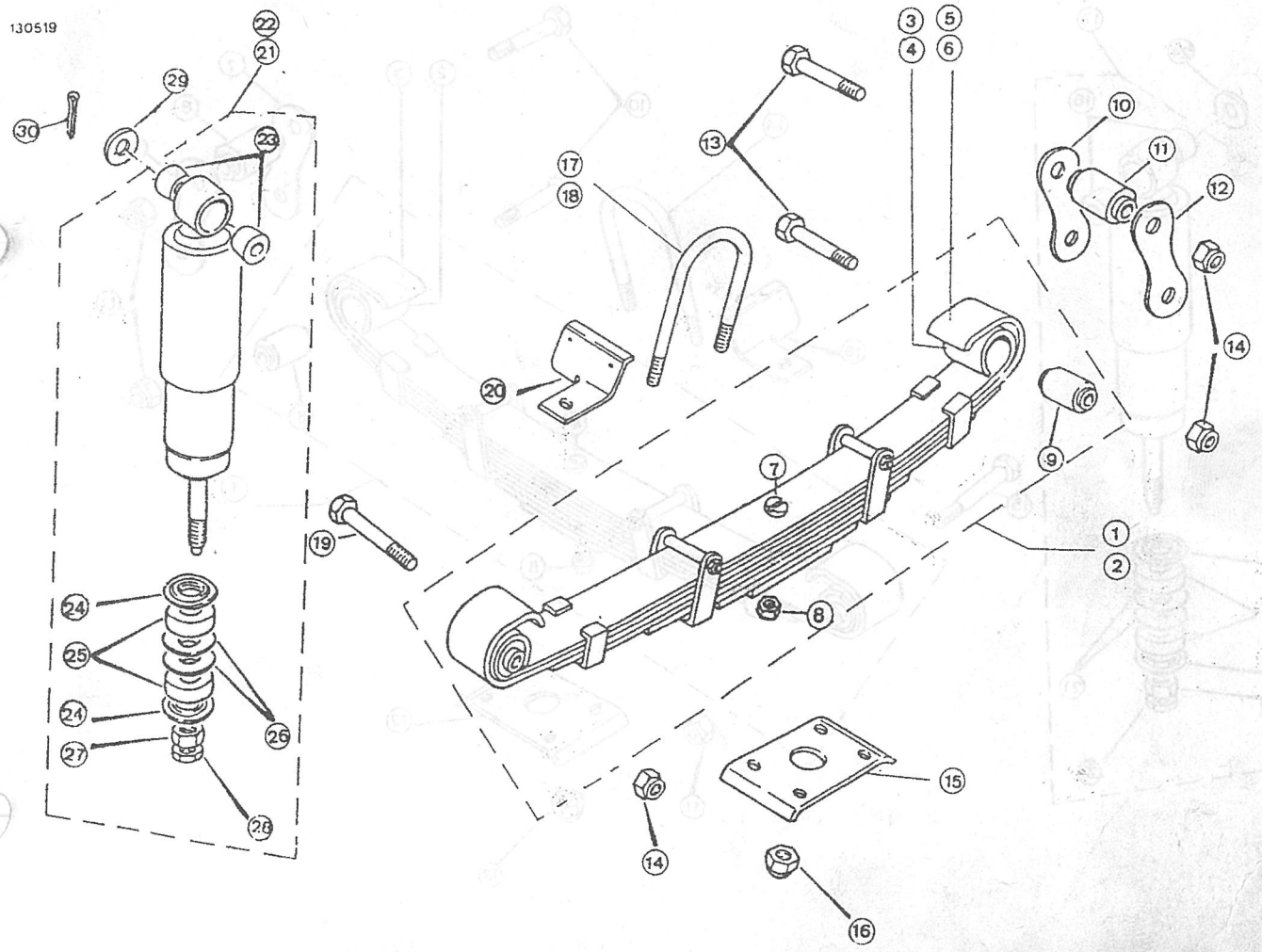

PUBLICACION N:790776 GRUPO-13 BASTIDOR Y SUSPEN SUBGRUPO-BALLESTA TRASERA
EDICION N: 1 GROUP-13 FRAME AND SUSPENS SUBGROUP-REAR SPRING
GROUPE-13 CHASSIS ET SUSPEN SUBGROUPE-RESSORT ARRIERE

N.FIG PLATE N.FIG	N.PIEZA PARTNUMBER N.PIECE	CAN QTY OUT	DENOMINACION	DESCRIPTION	DENOMINATION	OBSERVACIONES
1	169700	1	BALLESTA TRASERA L/I	REAR SPRING LH	RESSORT ARRIERE CG	2'5 L CON GRUA
	169701	1	BALLESTA TRASERA L/D	REAR SPRING RH	RESSORT ARRIERE CD	
2	193909	2	HOJA MAESTRA	MAIN LEAF	LAME MAITRESSE	
3	193910	2	HOJA SEGUNDA	2 AND LEAF	2 EME LAME	
4	189463	2	TORNILLO	BOLT	BOULON	
5	NY108041	2	TUERCA	NUT	ECROU	
6	233573	4	CASQUILLO	BUSH	BAGUE	
7	279970	2	PLACA LISA	PLAIN PLATE	PLAQUE LISSE	
8	233573	2	CASQUILLO	BUSH	BAGUE	
9	537685	2	PLACA ROSCADA	SCREWED PLATE	PLAQUE AVEC SPIRALE	
10	537740	4	TORNILLO	BOLT	BOULON	
11	252165	6	TUERCA	NUT	ECROU	
12	162754	2	PLACA	PLATE	PLAQUE	
13	810502	8	TUERCA	NUT	ECROU	
14	163789	4	ABARCON	"U" BOLT	BRIDE	
15	537741	2	TORNILLO	BOLT	BOULON	
16	NRC3448	1	PLACA L/D	PLATE RH	PLAQUE CD	
	NRC3449	1	PLACA L/I	PLATE LH	PLAQUE CG	
17	168724	2	AMORTIGUADOR	SHOCK ABSORBER	AMORTISSEUR	
18	243057E2	4	GOMA	RUBBER	CAOUTCHOUC	
19	500746	4	ARANDELA	WASHER	RONDELLE	
20	508896E2	4	GOMA	RUBBER	CAOUTCHOUC	
21	508895	4	ARANDELA	WASHER	RONDELLE	
22	087914	2	TUERCA	NUT	ECROU	
23	088016	2	TUERCA	NUT	ECROU	
24	264024	2	ARANDELA	WASHER	RONDELLE	
25	4063	2	PASADOR	PIN	GOUPILLE	

1305191

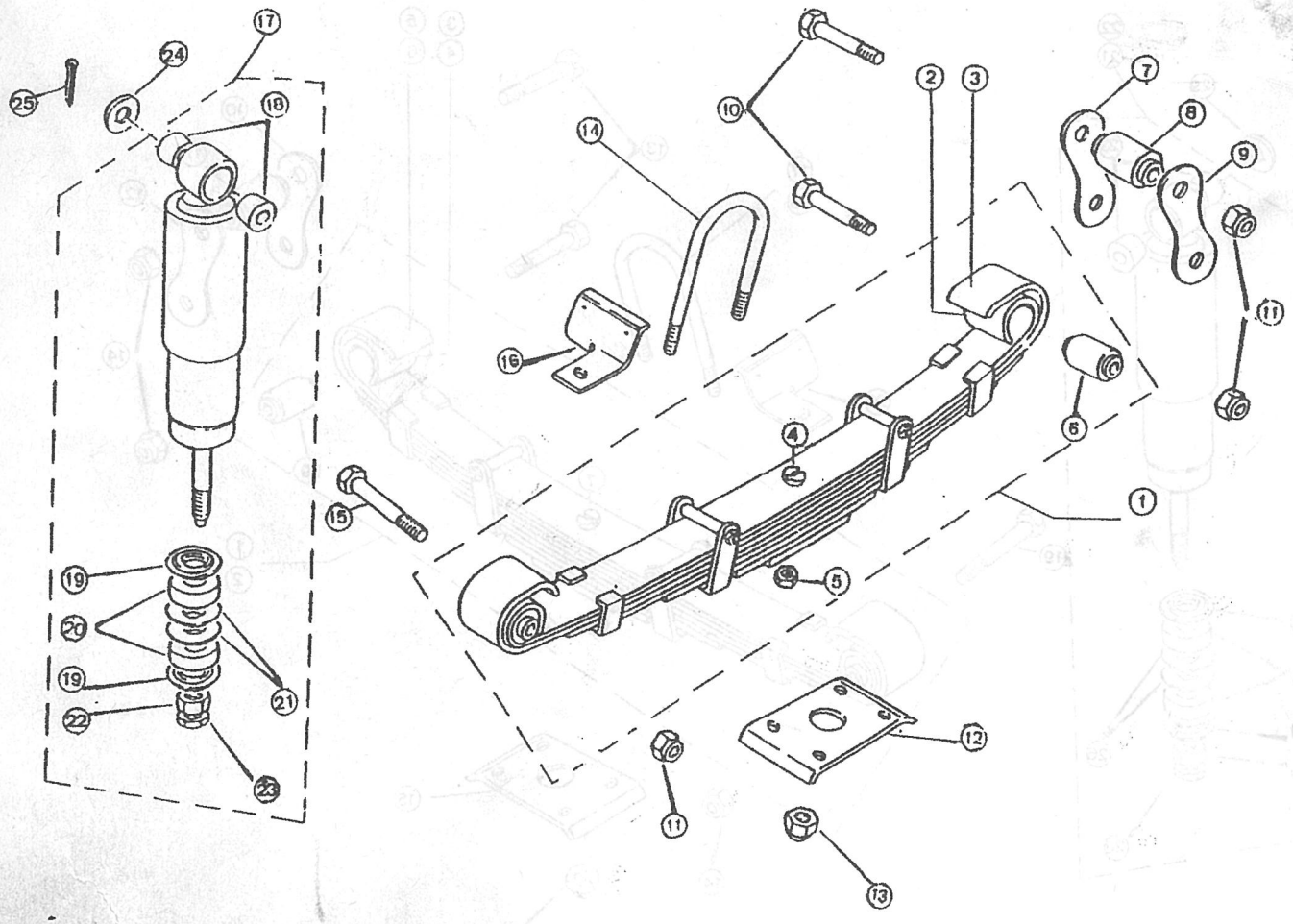

PUBLICACION N:790776 GRUPO=13 BASTIDOR Y SUSPEN SUBGRUPO=BALLESTA TRASERA
EDICION N: 1 GROUP=13 FRAME AND SUSPENS SUBGROUP=REAR SPRING
GROUPE=13 CHASSIS ET SUSPEN SUBGROUPE=RESSORT ARRIERE

N.FIG PLATE N.FIG	N.PIEZA PARTNUMBER N.PIECE	CAN QTY OUT	DENOMINACION	DESCRIPTION	DENOMINATION	OBSERVACIONES
1	162787	1	BALLESTA TRASERA LI	REAR SPRING LH	RESSORT ARRIERE CG	
	162788	1	BALLESTA TRASERA LD	REAR SPRING RH	RESSORT ARRIERE CD	
2	233573	4	CASQUILLO	BUSH	BAGUE	
3	194636	8	PLACA	PLATE	PLAQUE	
4	163772	2	TORNILLO M	BOLT M	BOULON	
5	194534	2	TUERCA M10	NUT M10	ECROU M10	
6	194398	4	BRIDA	FLANGE	BRIDE	
7	194400	4	PASADOR	PIN	GOUPILLE	
8	194399	4	CASQUILLO	RUSH	BAGUE	
9	194460	4	GOMA	RUBBER	CAOUTCHOUC	
10	244162	2	PLACA LISA	PLAIN PLATE	PLAQUE LISSE	
11	233573	2	CASQUILLO	BUSH	BAGUE	
12	537686	2	PLACA ROSCADA	SCREWED PLATE	PLAQUE AVEC SPIRALE	
13	537740	4	TORNILLO	BOLT	BOULON	
14	252165	6	TUERCA	MUT	ECROU	
15	NRC3897F1	1	PLACA LD	PLATE RM	PLAQUE CD	
	NRC3898F1	1	PLACA LI	PLATE LM	PLAQUE CG	
16	810502	8	TUERCA	NUT	ECROU	
17	NRC3882F1	4	ABARCON	U BOLT	BRIDE	
18	NRC3448	1	PROTECCION LD	SMIELD RH	PROTECTION CD	
	NRC3449	1	PROTECCION LI	SMIELD LH	PROTECTION CG	
19	537743	2	TORNILLO	BOLT	BOULON	
20	162795	2	AMORTIGUADOR	SHOCK ABSORBER	AMORTISSEUR	
21	243057E2	8	GOMA	RUBBER	CAOUTCHOUC	
22	4063	4	PASADOR	PIN	GOUPILLE	
23	264024	4	ARANDELA	WASHER	RONDELLE	

130541

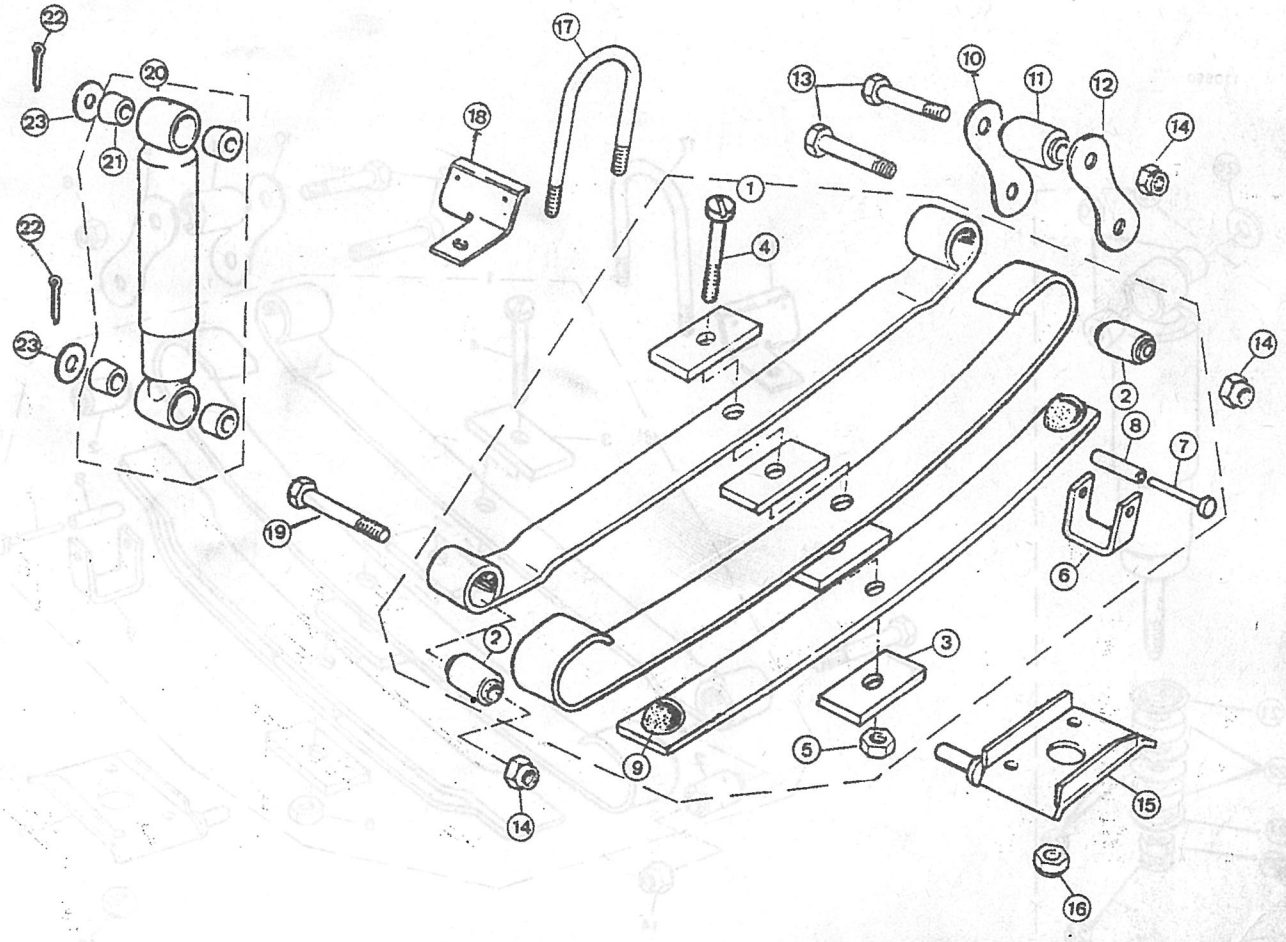

PUBLICACION N:790776 GRUPO=13 BASTIDOR Y SUSPEN SUBGRUPO=BALLESTA TRASERA
EDICION N: 1 GROUP=13 FRAME AND SUSPENS SUBGROUP=REAR SPRING
GROUPE=13 CHASSIS ET SUSPEN SUBGROUPE=RESSORT ARRIERE

N.FIG PLATE N.FIG	N.PIEZA PARTNUMBER N.PIECE	CAN QTY OUT	DENOMINACION	DESCRIPTION	DENOMINATION	OBSERVACIONES
1	163785	1	BALLESTA T LI 109SUP	REAR SPRIN LH 109SUP	RESSORT AR CG 109SUP	
	163786	1	BALLESTA T LD 109SUP	REAR SPRIN RH 109SUP	RESSORT AR CD 109SUP	
2	233573	4	CASQUILLO	BUSH	BAGUE	
3	194636	10	PLACA	PLATE	PLAQUE	
4	163713	2	TORNILLO M10	BOLT M10	BOULON M10	
5	194534	2	TUERCA M10	NUT M10	ECROU M10	
6	194398	4	BRIDA	FLANGE	BRIDE	
7	194400	4	PASADOR	BOLT	BOULON	
8	194399	4	CASQUILLO	BUSH	BAGUE	
9	537685	2	PLACA ROSCADA	SCREWED PLATE	PLAQUE AVEC SPIRALE	
10	279970	2	PLACA LISA	PLAIN PLATE	PLAQUE LISSE	
11	233573	2	CASQUILLO	BUSH	BAGUE	
12	537740	4	TORNILLO	BOLT	BOULON	
13	537741	2	TORNILLO	BOLT	BOULON	
14	252165	6	TUERCA	NUT	ECROU	
15	264466K2	1	PLCA L I	PLATE L H	PLAQUE C G	
	264467K2	1	PLACA L D	PLATE R H	PLAQUE C D	
16	810502	8	TUERCA	NUT	ECROU	
17	NRC3885F1	4	ABARCON	U BOLT	BRIDE	
18	NRC3448	1	PROTECCION L I	SHIELD L H	PROTECTION C G	
	NRC3449	1	PROTECCION L D	SHILD R H	PROTECTION C D	
19	162790	2	AMORTIGUADOR	SHOCK ABSORBER	AMORTISSEUR	
20	243057E2	4	GOMA	RUBBER	CAOUTCHOUC	
21	500746	4	ARANDELA	WASHER	RONDELLE	
22	508896E2	4	GOMA	RUBBER	CAOUTCHOUC	
23	087914	2	TUERCA	NUT	ECROU	
24	088016	2	TUERCA	NUT	ECROU	
25	508895	4	ARANDELA	WASHER	RONDELLE	
26	264024	2	ARANDELA	WASHER	RONDELLE	
27	4063	2	PASADOR	PIN	GOUPILLE	

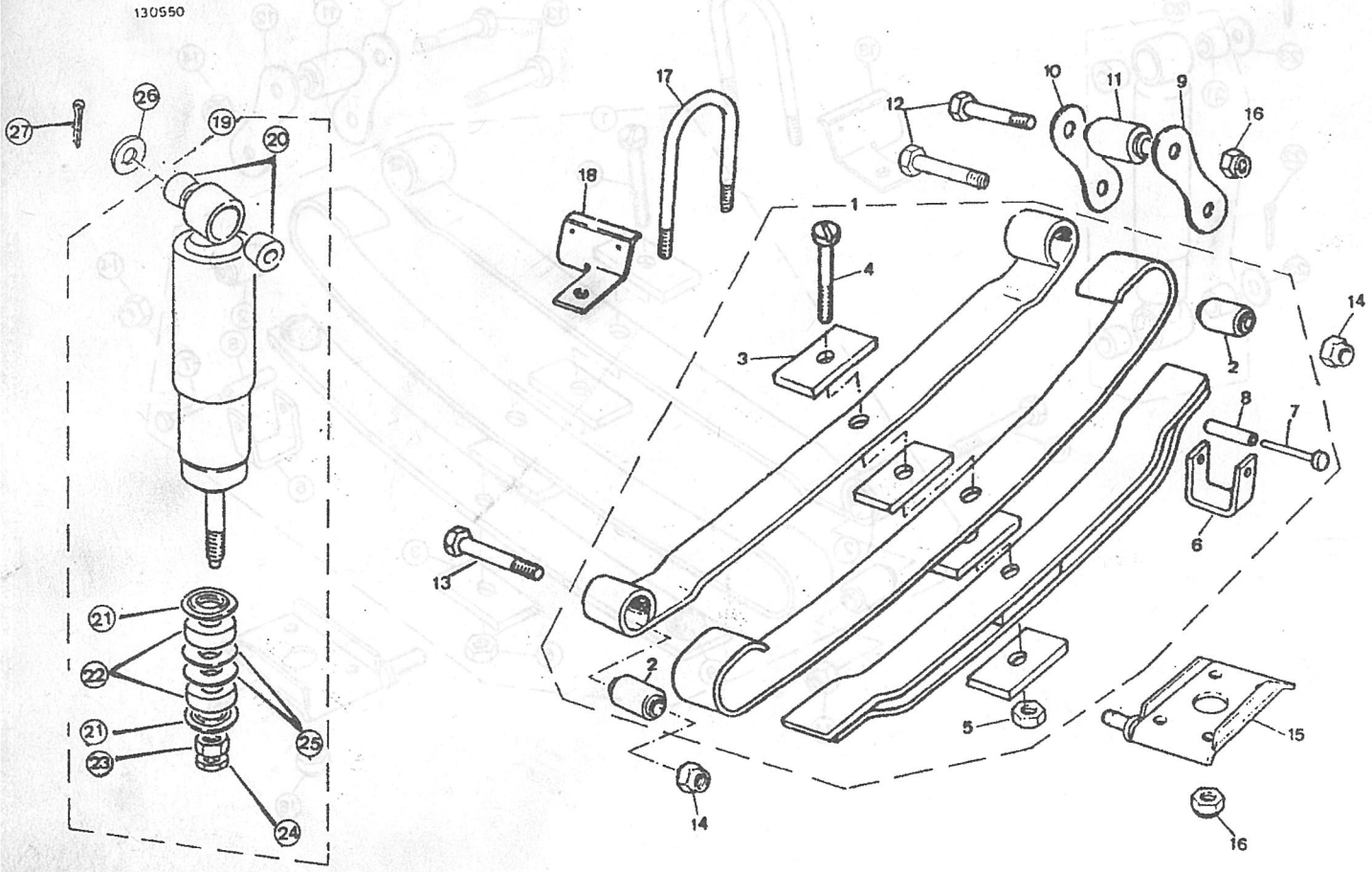

PUBLICACION N:790776 GRUPO=13 BASTIDOR Y SUSPEN SUBGRUPO=BARRA ESTABILIZ DELA
EDICION N: 1 GROUP=13 FRAME AND SUSPENS SUBGROUP=FRONT PANHARD ROD
GROUPE=13 CHASSIS ET SUSPEN SUBGROUPE=BARRE DE STABIL AVAN

N.FIG PLATE N.FIG	N.PIEZA PARTNUMBER N.PIECE	CAN QTY OUT	DENOMINACION	DESCRIPTION	DENOMINATION	OBSERVACIONES
1	164752	1	BARRA ESTABILIZADORA	PANHARD ROD	BARRE DE STABILISATI	
2	255047	4	TORNILLO	BOLT	BOULON	
3	544772	2	SOPORTE	SUPPORT	SUPPORT	
4	552418	2	GOMA	RUBBER	CAONTCHOUC	
5	180426	4	ARANDELA	WASHER	RONDELLE	
6	254812	4	TUERCA	NUT	ECROU	
7	256207	2	TORNILLO	2500C	BOLT 2500C	
8	141133	2	ARANZADERA 2500C	CLAMP 2500C	ETRIER 2500C	
9	3912	2	ARANDELA 2500C	WASHER 2500C	RONDELLE 2500C	
10	252220	2	TUERCA	2500C	NUT 2500C	
11	169800	2	BARRA	PIVOTED ROD	BARRE	
12	243057E2	4	GOMA	RUBBER	CAOUTCHOUC	
13	264024	2	ARANDELA	WASHER	RONDELLE	
14	4063	2	PASADOR	PIN	GOUPILLE	
15	500746	4	ARANDELA	WASHER	RONDELLE	
16	552818	4	GOMA	RUBBER	CAOUTCHOUC	
17	508895	4	ARANDELA	WASHER	RONDELLE	
18	252164	2	TUERCA	NUT	ECROU	
19	164753	1	SOPORTE LD	SUPPORT RH	SUPPORT CD	
	164754	1	SOPORTE LI	SUPPORT LH	SUPPORT CG	
20	576522	6	TORNILLO	BOLT	BOULON	
21	181165	6	TUERCA	NUT	ECROU	

130601

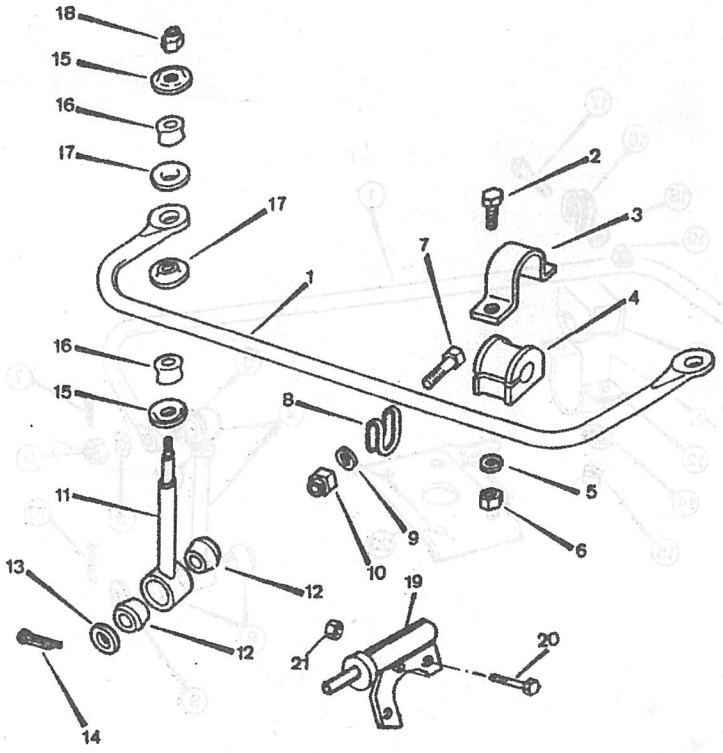

PUBLICACION N:790776 GRUPO=13 BASTIDOR Y SUSPEN SUBGRUPO=BARRA ESTABILIZ TRAS
EDICION N: 1 GROUP=13 FRAME AND SUSPENS SUBGROUP=REAR PANHARD ROD
GROUPE=13 CHASSIS ET SUSPEN SUBGROUPE=BARRE DE STABIL ARRI

N.FIG PLATE N.FIG	N.PIEZA PARTNUMBER N.PIECE	CAN QTY OUT	DENOMINACION	DESCRIPTION	DENOMINATION	OBSERVACIONES
1	577442	1	BARRA ESTABILIZADORA	PANHARD ROD	BARRE DE STABILISATE	
2	148458	2	BARRA 2500L	TRACK ROD 2500L	BARRE 2500L	
3	169107	2	ROTULA	BALL KOINT	ROTULE	
4	162111	2	TUERCA	NUT	ECROU	
5	850425	2	ARANDELA PLANA	PLAIN WASHER	RONDELLE PLANE	
6	853775	2	TUERCA	NUT	ECROU	
7	852467	2	PASADOR	PIN	GOUPILLE	
8	243057E2	4	GOMA	RUBBER	CAOUTCHOUC	
9	264024	2	ARANDELA PLANA	PLAIN WASHER	RONDELLE PLANE	
10	4063	2	PASADOR	PIN	GOUPILLE	
11	552418	2	GOMA	RUBBER	CAOUTCHOUC	
12	544772	2	SOPORTE	SUPPORT	SUPPORT	
13	889655	4	TORNILLO	BOLT	BOULON	
14	3077	4	ARANDELA MUELLE	SPRING WASHER	RONDELLE RESSORT	
15	853035	4	TUERCA	NUT	ECROU	
16	141133	2	BRIDA	CLAMP	ETRIER	
17	256207	2	TORNILLO	BOLT	BOULON	
18	3912	2	ARANDELA PLANA	PLAIN WASHER	RONDELLE PLANE	
19	252220	2	TUERCA	NUT	ECROU	
20	264466K2	1	PLACA LI	PLATE LM	PLAQUE CG	
	264467K2	1	PLACA LD	PLATE RH	PLAQUE CD	

130613

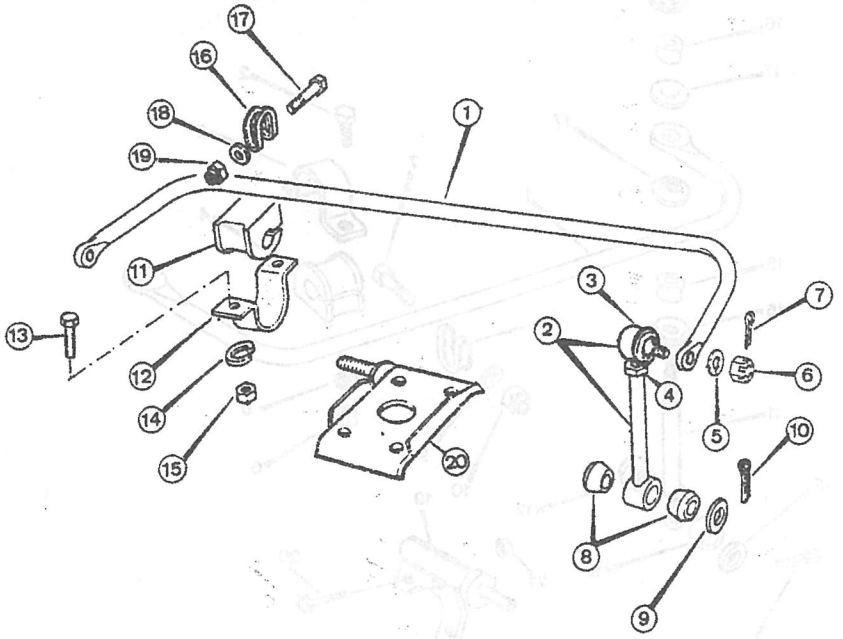

GRUPO 14 14 CARROCERIA

GROUP 14 14 BODY

GROUP 14 14 CARROSSERIE

COMPOSICION.....COMPOSITION.....COMPOSICION

REFERENCIA PARTNUMBER NUM.PIECE	DENOMINACION	DESCRIPTION	DENOMINATION
140116	FRONTAL	FRONT	AVANT
140204	SOPORTE BATERIA	BATTERY SUPPORT	SUPPORT DE BATTERIE
140321	ALETAS	WINGS	DILES
140323	ALETAS	WINGS	DILES
140523	CAPO	BONNET	CAPOT
140604	SALPICADERO Y PARABR	DASH AND WINDSCREEN	TABLIER ET PAREBRISS
1406041	SALPICADERO Y PARABR	DASH AND WINDSCREEN	TABLIER ET PAREBRISS
140707	PANEL SUPERIOR SALPI	DASH UPPER PANEL	PANNEAU SUPERIEUR TD
140708	PANEL DE SALPICADERO	PANEL OF DASH	PANNEAU DE TABLIER
1407081	PANEL DE SALPICADERO	PANEL OF DASH	PANNEAU DE TABLIER
140805	CLAPETA DE VENTILACI	AERATION LID	VOLET DE VENTILACION
140909	TAPA MANDO DE INSTRU	INSTRUMENTS COVER	COUVERCLE DE MANDO
141012	PUERTAS DELANTERAS	FRONT DOOR	PORTES AVANT
141015	PUERTAS LATERAL TRAS	SIDE REAR DOOR	PORTES LATERALE ARRI
141017	PUERTAS DELANTERAS	FRONT DOOR	PORTES AVANT
141018	PUERTAS LATERAL TRAS	SIDE REAR DOOR	PORTES LATERALE ARRI
141308	COMPUERTA TRASERA	REAR TAILBOARD	HAYON ARRIERE
141408	PUERTA TRASERA	REAR DOOR	PORTE ARRIERE
141409	PUERTA TRASERA	REAR DOOR	PORTE ARRIERE
141419	SOPORTE RUEDA	WHEEL SUPPORT	SUPPORT ROUE
141426	DOBLE PUERTA TRASERA	REAR DOUBLE DOOR	PORTE DOUBLE ARRIERE
141514	CERRADURAS	LOCKS	SERRURES
141515	CERRADURAS	LOCKS	SERRURES
141516	TIRANTES DE CERRADUR	LOCK TIE ROD	TIRANT DE SERRURE
141706	BISAGRAS Y TIRANTES	HINGE AND TIE RODS	CHARNIERE ET TIRANTS
141709	BISAGRAS Y TIRANTES	HINGE AND TIE RODS	CHARNIERE ET TIRANTS
141822	PANELES DE UMBRAL	SILL PANELS	PANNEAUX LONGERON
141911	BASE DE ASIENTOS	SEAT BASE	BASE DE SIEGE
142009	PISO DELANTERO	FRONT FLOOR	PLANCHER AVANT
142012	PISO DELANTERO	FRONT FLOOR	PLANCHER AVANT
142110	CAJA TRASERA	REAR BOX	BOITE ARRIERE
142111	CAJA TRASERA	REAR BOX	BOITE ARRIERE
142113	CAJA TRASERA	REAR BOX	BOITE ARRIERE

GRUPO 14 14 CARROCERIA

GROUP 14 14 BODY

GROUP 14 14 CARROSSERIE

COMPOSICION.....COMPOSITION.....COMPOSICION

REFERENCIA PARTNUMBER NUM.PIECE	DENOMINACION	DESCRIPTION	DENOMINATION
142114	CAJA TRASERA	REAR BOX	BOITE ARRIERE
142116	CAJA TRASERA	REAR BOX	BOITE ARRIERE
142132	CAJA TRASERA-DOBLE P	REAR BOX-DOUBLE DOOR	BOITE ARRIERE-DOUBLE
142213	REMATES DE CAJA	REAR BODY CAPPING	COUVRE JOINT
142214	REMATES DE CAJA	REAR BODY CAPPING	COUVRE JOINT
142215	REMATES DE CAJA	REAR BODY CAPPING	COUVRE JOINT
142400	LATERAL DE CAJA	BOX SIDE	LATERAL BOITE
142401	LATERAL DE CAJA	BOX SIDE	LATERAL BOITE
142411	LATERAL DE CAJA	BOX SIDE	LATERAL BOITE
142420	LATERAL DE CAJA	BOX SIDE	LATERAL BOITE
142604	CABINA Y TECHO	CAB AND TROPICAL ROD	CABINE ET TOIT
142710	TECHO DE POLIESTER	POLIESTER TOP	TOIT POLIESTER
142713	TECHO DE POLIESTER	POLIESTER TOP	TOIT POLIESTER
142715	TECHO DE POLIESTER	POLIESTER TOP	TOIT POLIESTER
1427151	TECHO DE POLIESTER	POLIESTER TOD	TOIT POLIESTER
142814	GOMAS	RUBBER	CAOUTCHOUC
142816	ANAGRAMAS	ANAGRAM	ANAGRAME
1428161	ANAGRAMAS	ANAGRAM	ANAGRAME
142826	PLACA CARASTERISTICA	PLATE CHARACTERISTIC	PLAQUE CARACTERISTIQ
142901	TOLDO CORTO	SHORT HOOD	BACHE COURT

PUBLICACION N:790776 GRUPO=14 CARROCERIA SUBGRUPO=FRONTAL
EDICION N: 1 GROUP=14 BODY SUBGROUP=FRONT
GROUPE=14 CARROSSERIE SUBGROUPE=AVANT

N.FIG PLATE N.FIG	N.PIEZA PARTNUMBER N.PIECE	CAN QTY OUT	DENOMINACION	DESCRIPTION	DENOMINATION	OBSERVACIONES
1	MTC3862	1	PARRILLA FRONTAL	GRILLE	GRILLE	
2	205867	1	PARRILLA LD	GRILLE RH	GRILLE CD	
3	205861	1	PARRILLA LI	GRILLE LH	GRILLE CG	
4	184260	8	TORNILLO	SCREW	VIS	
5	79051	8	TUERCA PLASTICO	PLASTIC NUT	ECROU PLASTIQUE	
6	09409-07306	8	CLIP	CLIP	CLIP	
7	730790	2	ESCUADRA DE CALANDRA	GRILL ANGLE	EQUERRE POUR CALANDR	
8	MRC8960K3	1	CALANDRA RADIADOR	RADIATOR GRILLE PANE	PANNEAU DE GRILLE DE	
9	MRC9586	1	PANEL SUPERIOR CALAN	GRILLE TOP PANEL	PANNEAU SUPERIEUR DE	
10	113345	1	CAMPANA DE RADIADOR	FAN BELL	CARENAGE DE VENTILAT	
11	77814U80000	1	ANAGRAMA SANTANA	RIVETTED TYPE SANTAN	PLACA SANTANA	
12	185254	4	TORNILLO	SCREW	VIS	
13	184255	4	ARANDELA	WASHER	RONDELLE	
14	79013	4	TUERCA PLASTICO	LOCKUT NUT	ECROU LOCKUT	
15	MTC1902	1	SOPORTE ALETA LD	WING SUPPORT RH	SUPPORT AILE CD	
	MTC1903	1	SOPORTE ALETA LI	WING SUPPORT LH	SUPPORT AILE CG	
16	SX108201	4	TORNILLO	BOLT	BOULON	
17	WM108001	4	ARANDELA MUELLE	SPRING WASHER	RONDELLE RESSORT	
18	3830	4	ARANDELA PLANA	PLAIN WASHER	RONDELLE PLANE	
19	78248	4	REMACHE	RIVET	RIVET	
20	182124	2	TORNILLO	BOLT	BOULON	
21	3898	S-N	ARANDELA PLANA	PLAIN WASHER	RONDELLE PLANE	
22	WM108001	2	ARANDELA MUELLE	SPRING WASHER	RONDELLE RESSORT	
23	181185	2	TUERCA	NUT	ECROU	
24	255008	2	TORNILLO	BOLT	BOULON	
25	3074	2	ARANDELA MUELLE	SPRING WASHER	RONDELLE RESSORT	
26	3817	4	ARANDELA PLANA	PLAIN WASHER	RONDELLE PLANE	
27	181184	2	TUERCA	NUT	ECROU	
28	182120	2	TORNILLO	BOLT	BOULON	
29	4374	4	ARANDELA PLANA	PLAIN WASHER	RONDELLE PLANE	
30	WM108001	2	ARANDELA MUELLE	SPRING WASHER	RONDELLE RESSORT	
31	181185	2	TUERCA	NUT	ECROU	
32	209037	1	TIRANTE L/I	CROSS BRACE TUBE LH	TIRANT CG	
	209038	1	TIRANTE L/D	CROSS BRACE TUBE RH	TIRANT CD	
33	202371	1	TIRANTE	CROSS BRACE	TIRANT	
34	182117	2	TORNILLO	BOLT	BOULON	
35	3899	4	ARANDELA PLANA	PLAIN WASHER	RONDELLE PLANE	
36	WM108001	2	ARANDELA MUELLE	SPRING WASHER	RONDELLE RESSORT	
37	181185	2	TUERCA	NUT	ECROU	
38	255045	2	TORNILLO	BOLT	BOULON	
39	4094	2	ARANDELA PLANA	PLAIN WASHER	RONDELLE PLANE	
40	180426	2	ARANDELA MUELLE	SPRING WASHER	RONDELLE RESSORT	

140116

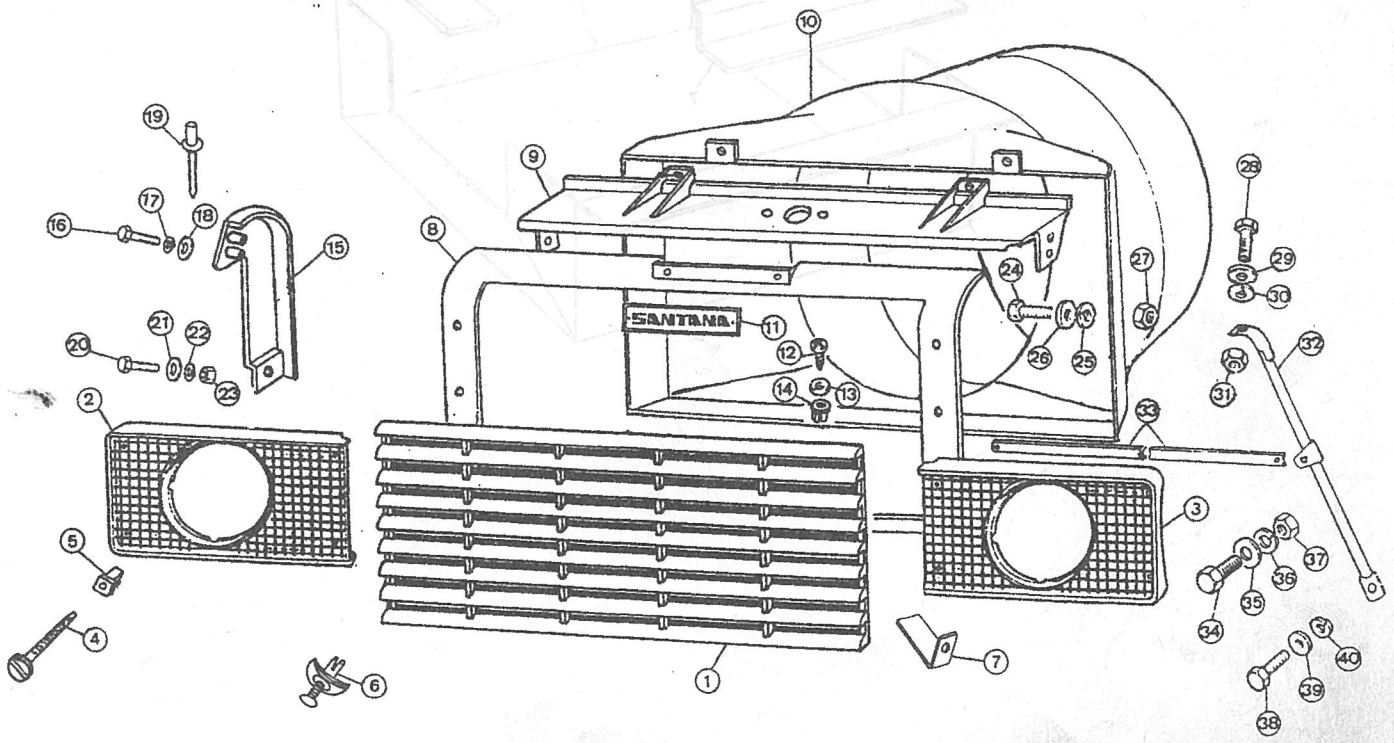

PUBLICACION N:790776 GRUPO=14 CARROCERIA SUBGRUPO=SOPORTE BATERIA
EDICION N: 1 GROUP=14 BODY SUBGROUP=BATTERY SUPPORT
GROUPE=14 CARROSSERIE SUBGROUPE=SUPPORT DE BATTERIE

N.FIG PLATE N.FIG	N.PIEZA PARTNUMBER N.PIECE	CAN QTY OUT	DENOMINACION	DESCRIPTION	DENOMINATION	OBSERVACIONES
1	201776	1	SOPORTE BATERIA	BATTERY SUPPORT	SUPPORT DE BATTERIE	
2	203375	1	PERFIL	ANGLE	PROFIL	
3	209793	1	PLETINA CON ESPARRAG	PLATE WITH STUD	PLAQUE AVEC GOUJONS	
4	250431	2	TUERCA	NUT	ECROU	
5	3840	2	ARANDELA	WASHER	RONDELLE	
6	203379	3	GOMA	RUBBER	CAOUTCHOUC	
7	203381	1	PERFIL	ANGLE	PROFIL	
8	203380	2	PERFIL	ANGLE	PROFIL	

140204

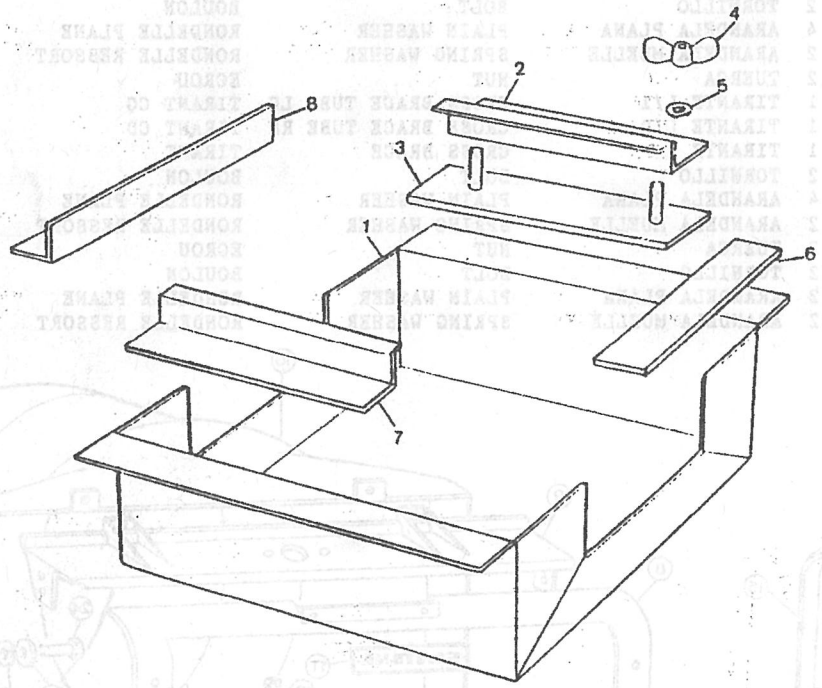

PUBLICACION N:790776 GRUPO=14 CARROCERIA SUBGRUPO=ALETAS
EDICION N: 1 GROUP=14 BODY SUBGROUP=WINGS
GROUPE=14 CARROSSERIE SUBGROUPE=DILES

N.FIG PLATE N.FIG	N.PIEZA PARTNUMBER N.PIECE	CAN QTY OUT	DENOMINACION	DESCRIPTION	DENOMINATION	OBSERVACIONES
1	738303	1	CONJ.ALETA L/I	WING ASSY LH	ENS AILE CG	2'5 C-DIR.HIDRAU.
	738308	1	CONJ.ALETA L/D	WING ASSY RH	ENS AILE CD	2'5 C
	738330	1	CONJ.ALETA L/I	WING ASSY LH	ENS AILE CG	2'5C-DIR.MECANICA
2	738304	1	CONJ.ALETA L/I	WING ASSY LH	ENS AILE CG	2'5L-2'5E-D.HIDRA
	738307	1	CONJ.ALETA L/D	WING ASSY RH	ENS AILE CD	2'5L-2'5E
	738331	1	CONJ.ALETA L/I	WING ASSY LH	ENS AILE CG	2'5L-2'5E-D.MECAN
3	737128	1	ALETA L/D	WING RH	AILE CD	2'5 C
	737866	1	ALETA L/I	WING LH	AILE CG	2'5 C-DIRE.MECANI
	738305	1	ALETA L/I	WING LH	AILE CG	2'5 C-DIRE.HIDRAU
4	737134	1	ALETA L/D	WING RH	AILE CD	2'5L-2'5E
	737865	1	ALETA L/I	WING LH	AILE CG	2'5L-2'5E-DI.MECA
	738306	1	ALETA L/I	WING LH	AILE CG	2'5L-2'5E-DI.HIDR
5	737125	1	PANEL FRONTAL LI	FRONT PANEL LH	PANNEAU AVANT CG	
	737126	1	PANEL FRONTAL LD	FRONT PANELRH	PANNEAU AVANT CD	
6	204313	2	PANEL	PANEL	PANNEAU	
7	330426	1	PANEL L/D	PANEL RH	PANNEAU CD	
	330427	1	PANEL L/I	PANEL LH	PANNEAU CG	
8	182112	10	TORNILLO	BOLT	BOULON	
	182113	1	TORNILLO	BOLT	BOULON	
9	3467	22	ARANDELA PLANA	PLAIN WASHER	RONDELLE PLANE	
10	3074	11	ARANDELA MUELLE	SPRING WASHER	RONDELLE RESSORT	
11	181184	11	TUERCA	NUT	ECROU	
12	302222	5	REMACHE	RIVET	RIVET	
13	78392	8	TORNILLO	SCREW	VIS	
14	3966	8	ARANDELA PLANA	PLAIN WASHER	RONDELLE PLANE	
15	78393	8	TUERCA J	NUT J	ECROU J	
16	182113	2	TORNILLO	BOLT	BOULON	
17	3817	4	ARANDELA PLANA	PLAIN WASHER	RONDELLE PLANE	
18	3074	2	ARANDELA MUELLE	SPRING WASHER	RONDELLE RESSORT	
19	181184	2	TUERCA	NUT	ECROU	
20	219680	2	ARANDELA GOMA	RUBBER WASHER	RONDELLE CAOUTCHOUC	
21	204846	1	GUARDABARROS L/I	FENDER LH	GARDE-BOUE CG	
22	202945	1	GUARDABARROS L/D	FENDER RH	GARDE-BOUE CD	
23	203743	1	TIRANTE L/I	TIE ROD LH	TIRANT CG	
	203744	1	TIRANTE L/D	TIE ROD RH	TIRANT CD	
24	78248	3	REMACHE	RIVET	RIVET	
25	09404A06402	3	ABRAZADERA	CLAMP	COLLIER	
26	182112	13	TORNILLO	BOLT	BOULON	
27	3074	15	ARANDELA MUELLE	SPRING WASHER	RONDELLE RESSORT	
28	320045	6	TORNILLO	BOLT	BOULON	
29	3900	6	ARANDELA PLANA	PLAIN WASHER	RONDELLE PLANE	
30	302532	6	TUERCA	NUT	ECROU	
31	3821	19	ARANDELA PLANA	PLAIN WASHER	RONDELLE PLANE	
32	181184	15	TUERCA	NUT	ECROU	

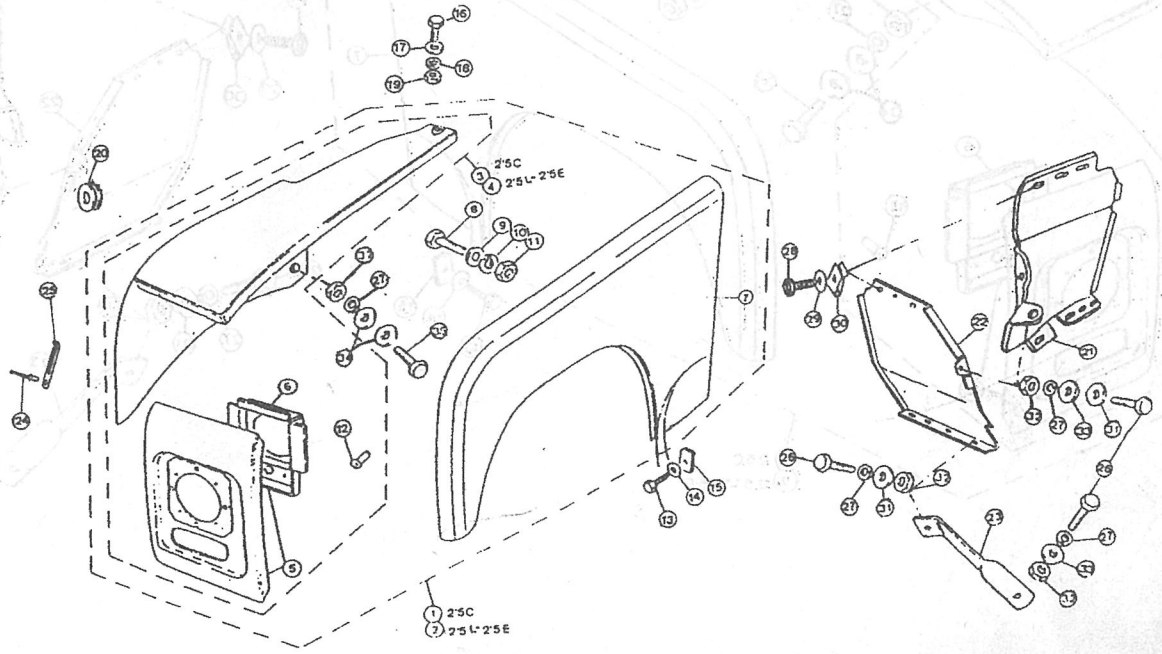

PUBLICACION N:790776 GRUPO=14 CARROCERIA SUBGRUPO=ALETAS
EDICION N: 1 GROUP=14 BODY SUBGROUP=WINGS
GROUPE=14 CARROSSERIE SUBGROUPE=DILES

N.FIG PLATE N.FIG	N.PIEZA PARTNUMBER N.PIECE	CAN QTY OUT	DENOMINACION	DESCRIPTION	DENOMINATION	OBSERVACIONES
33	3840	7	ARANDELA PLANA	PLAIN WASHER	RONDELLE PLANE	
34	3817	4	ARANDELA PLANA	PLAIN WASHER	RONDELLE PLANE	
35	182113	2	TORNILLO	BOLT	BOULON	

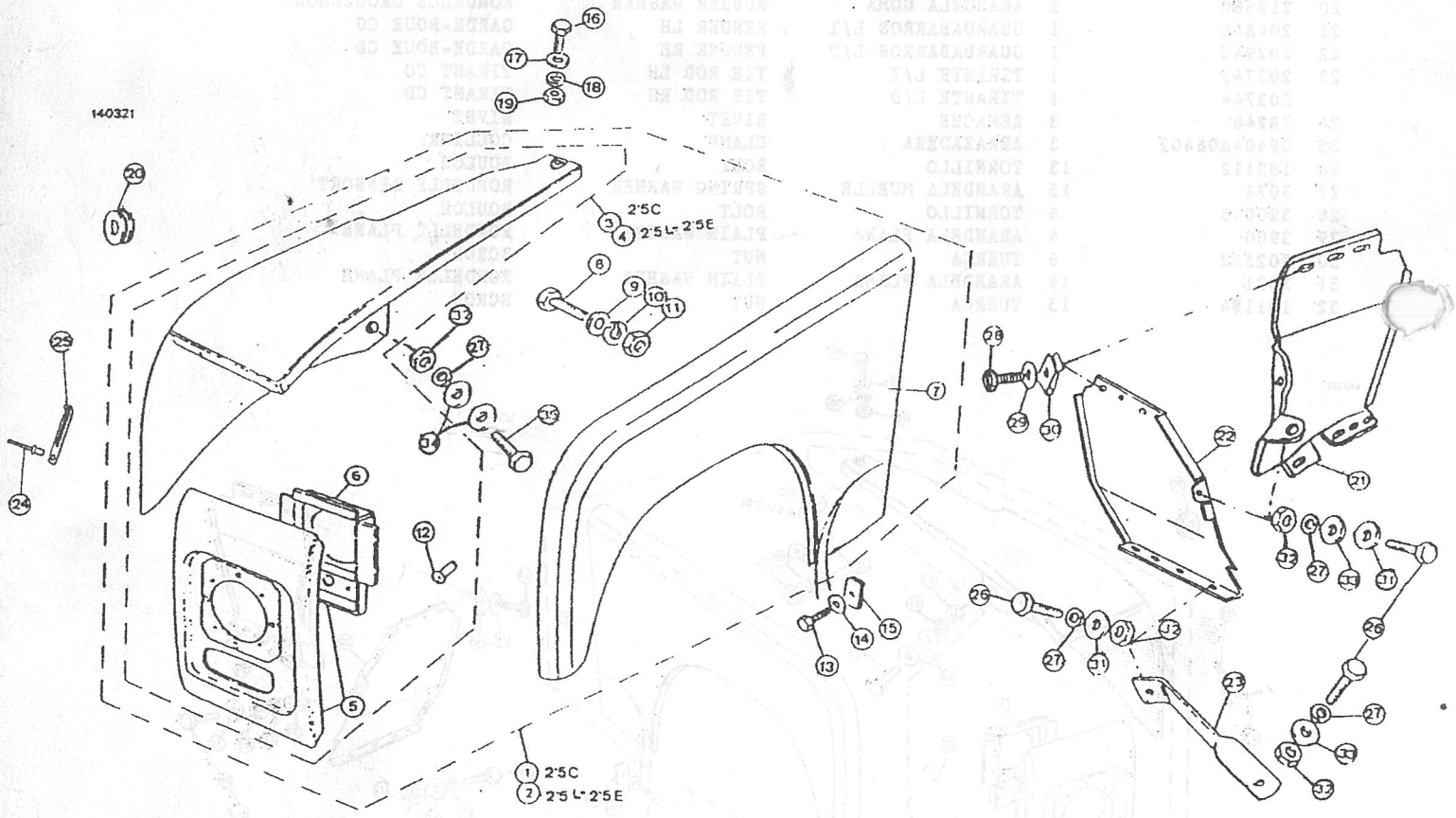

PUBLICACION N:790776 GRUPO=14 CARROCERIA SUBGRUPO=ALETAS
EDICION N: 1 GROUP=14 BODY SUBGROUP=WINGS
GROUPE=14 CARROSSERIE SUBGROUPE=DILES

N.FIG PLATE N.FIG	N.PIEZA PARTNUMBER N.PIECE	CAN QTY OUT	DENOMINACION	DESCRIPTION	DENOMINATION	OBSERVACIONES
1	737561	1	CON ALETA LD 2500C	WING ASSY RH 2500C	ENS AILE CD 2500C	
	737794	1	CONJ ALETA LI 2500C	WING ASSY LH 2500C	ENS AILE CG 2500C	
2	737562	1	CONJ.ALETA L/D 2500L	WING ASSY RH 2500L	ENS AILE CD 2500L	
	737795	1	CONJ.ALETA L/I 2500L	WING ASSY LH 2500L	ENS AILE CG 2500L	
3	737558	1	ALETA LD 2500C	WING RH 2500C	AILE CD 2500C	
	737791	1	ALETA LI 2500C	WING LH 2500C	AILE CG 2500C	
4	737560	1	ALETA L/D 2500L	WING RH 2500L	AILE CD 2500L	
	737792	1	ALETA L/I 2500L	WING LH 2500L	AILE CG 2500L	
5	737125	1	PANEL FRONTAL LI	PANEL FRONT LH	PANNEAU AVANT CG	
	737126	1	PANEL FRONTAL LD	PANEL FRONT RH	PANNEAU AVANT CD	
6	204313	2	PANEL	PANEL	PANNEAU	
7	737555	1	PANEL LI	PANEL LH	PANNEAU CG	
	737556	1	PANEL LD	PANEL RH	PANNEAU CD	
8	182112	10	TORNILLO	BOLT	BOULON	
	182113	1	TORNILLO	BOLT	BOULON	
9	3467	22	ARANDELA PLANA	PLAIN WASHER	RONDELLE PLANE	
10	3074	11	ARANDELA MUELLE	SPRING WASHER	RONDELLE RESSORT	
11	181184	11	TUERCA	NUT	ECROU	
12	78392	8	TORNILLO	BOLT	BOULON	
13	3966	8	ARANDELA PLANA	PALIN WASHER	RONDELLE PLANE	
14	78393	8	TUERCA	NUT	ECROU	
15	182113	2	TORNILLO	BOLT	BOULON	
16	3817	4	ARANDELA PLANA	PLAIN WASHER	RONDELLE PLANE	
17	3074	2	ARANDELA MUELLE	SPRING WASHER	RONDELLE RESSORT	
18	181184	2	TUERCA	NUT	ECROU	
19	MRC9377K1	1	ALETINES L/I	EYEBROW MOULDING LH	MOULURE D'AILE CG	
	MRC9378K1	1	ALETINES L/D	EYEBROW MOULDING RH	MOULURE D'AILE CD	
20	09409-07306	24	REMACHE DE PLASTICO	PLASTIC RIVET	RIVET PLASTIQUE	
21	204846	1	GUARDABARROS L/I	FENDER LH	PARE BOVE CG	
22	730005	1	GUARDABARROS L/D	FENDER RH	PARE BOVE CD	
23	203743	1	TIRANTE L/I	TIE ROD LH	TIRANT CG	
	203744	1	TIRANTE L/D	TIE ROD RH	TIRANT CD	
24	219680	2	ARANDELA GOMA	RUBBER WASHER	RONDELLE CAOUTCHOUC	
25	3621	2	CLIP	CLIP	CLIP	
26	182113	2	TORNILLO	BOLT	BOULON	
27	3840	2	ARANDELA PLANA	PLAIN WASHER	RONDELLE PLANE	
28	320045	6	TORNILLO	BOLT	BOULON	
29	3900	6	ARANDELA PLANA	PLAIN WASHER	RONDELLE PLANE	
30	302532	6	TUERCA	NUT	ECROU	
31	182112	5	TORNILLO	BOLT	BOULON	
32	3074	17	ARANDELA MUELLE	SPRING WASHER	RONDELLE RESSORT	
33	3840	7	ARANDELA PLANA	PLAIN WASHER	RONDELLE PLANE	
34	181184	17	TUERCA	NUT	ECROU	
35	182112	4	TORNILLO	BOLT	BOULON	

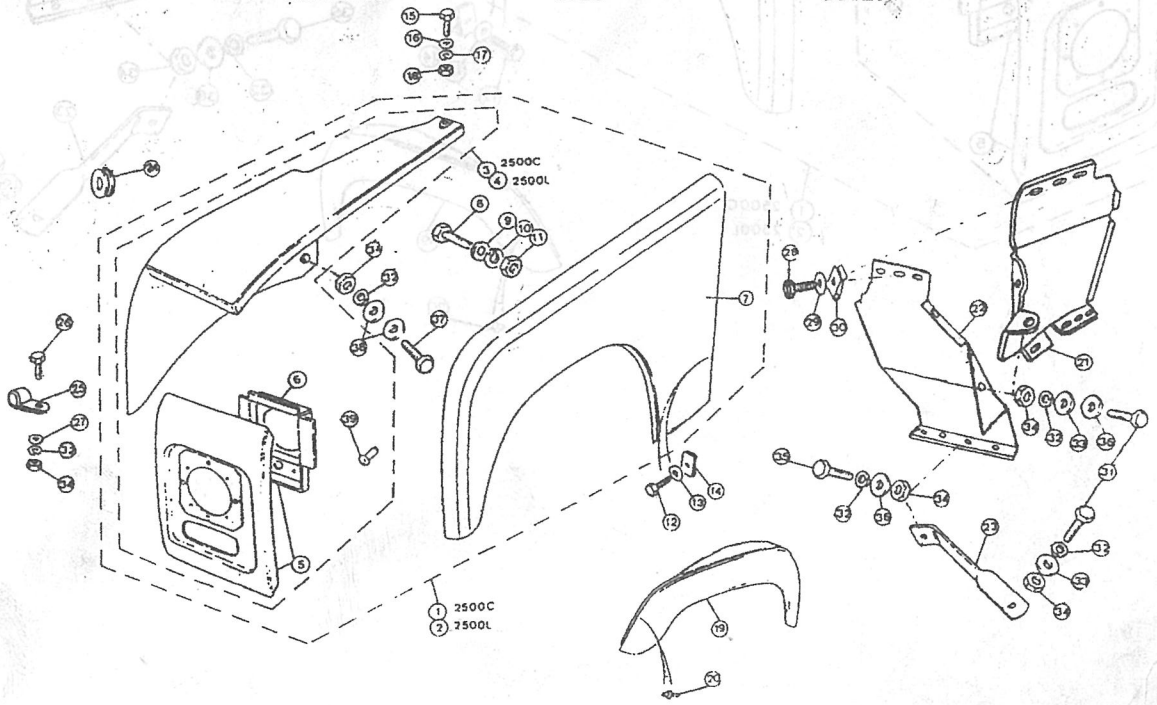

PUBLICACION N:790776 GRUPO=14 CARROCERIA SUBGRUPO=ALETAS
EDICION N: 1 GROUP=14 BODY SUBGROUP=WINGS
GROUPE=14 CARROSSERIE SUBGROUPE=DILES

N.FIG PLATE N.FIG	N.PIEZA PARTNUMBER N.PIECE	CAN QTY OUT	DENOMINACION	DESCRIPTION	DENOMINATION	OBSERVACIONES
	182113	2	TORNILLO	BOLT	BOULON	
	255209	2	TORNILLO	BOLT	BOULON	
36	3821	19	ARANDELA PLANA	PLAIN WASHER	RONDELLE PLANE	
37	182113	2	TORNILLO	BOLT	BOULON	
38	3817	4	ARANDELA PLANA	PLAIN WASHER	RONDELLE PLANE	
39	302222	5	REMACHE	RIVET	RIVET	

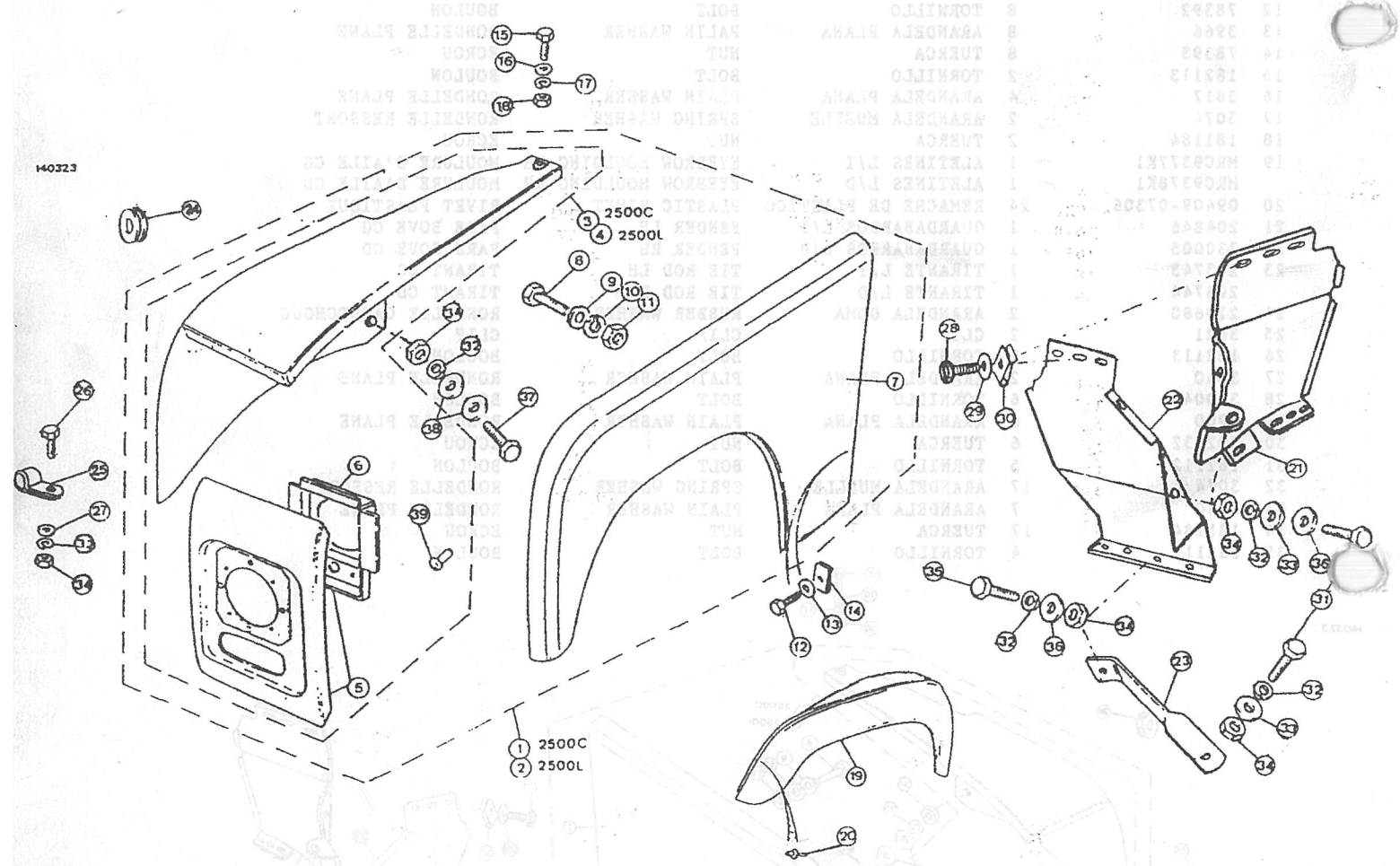

PUBLICACION N:790776 GRUPO=14 CARROCERIA SUBGRUPO=CAPO
EDICION N: 1 GROUP=14 BODY SUBGROUP=BONNET
GROUPE=14 CARROSSERIE SUBGROUPE=CAPOT

N.FIG PLATE N.FIG	N.PIEZA PARTNUMBER N.PIECE	CAN QTY OUT	DENOMINACION	DESCRIPTION	DENOMINATION	OBSERVACIONES
1	738143	1	CAPO	BONNET	CAPOT	
2	203580	2	BISAGRA	HINGE	CHARNIERE	2'5C-2'5L-2'5E
3	730025	4	CASQUILLO	BUSH	BAGUE	
4	203164	2	EJE	SHAFT	AXE	
5	111147	2	ANILLO ELASTICO	CIRCLIP	CIRCLIP	
6	78233	6	TORNILLO	BOLT	BOULON	
7	3912	6	ARANDELA PLANA	PLAIN WASHER	RONDELLE PLANE	
8	3074	6	ARANDELA MUELLE	SPRING WASHER	RONDELLE RESSORT	
9	254800	6	TUERCA	NUT	ECROU	
10	209233	1	TIRANTE CAPOT	BONNET STAY	ENTRETOISE CAPOT	
11	MRC9244	2	BISAGRA	HINGE	CHARNIERE	2500C-2500L
12	346849	2	CASQUILLO	BUSCH	BAGUE	
13	SF106201	6	TORNILLO	BOLT	BOULON	
14	3912	6	ARANDELA PLANA	PLAIN WASHER	RONDELLE PLANE	
15	08321A31066	6	ARANDELA MUELLE	SPRING WASHER	RONDELLE RESSORT	
16	NH106041	6	TUERCA	NUT	ECROU	
17	737786	1	CABLE APERTURA CAPOT	CABLE HOOK LOCK	CABLE OUVERTURE CAPO	
18	336535	1	PASADOR	PIN	GOUJON	
19	566902K1	1	TERMINAL CABLE	CABLE TERMINAL	SERRECABLES	
20	41379	1	CLIP	CLIP	CLIP	
21	237120	1	TORNILLO	BOLT	BOULON	
22	189484	1	ARANDELA PLANA	PLAIN WASHER	RONDELLE PLANE	
23	3073	1	ARANDELA MUELLE	SPRING WASHER	RONDELLE RESSORT	
24	180124	1	TUERCA	NUT	ECROV	
25	09320A06014	2	TOPE DE GOMA	RUBBER STOP	PARE-CHOC DE CAOUTCH	
26	02112-06163	2	TORNILLO	BOLT	BOULON	
27	337969K1	1	PIVOTE DE CERRADURA	STRIMER PIN OF CAPOT	CHEVILLE DE SERRURE	
28	MRC6978K2	1	PLACA DE CIERRE	HOOD FASTENER PLATE	PLAQUE DE ATTACHE CA	
29	MRC6977K2	1	CIERRE DE CAPO	HOOD FASTENER ASSY	ENS ATTACHE DE CAPOT	
30	3829	1	ARANDELA	WASHER	RONDELLE	
31	182120	2	TORNILLO	BOLT	BOULON	
32	WM108001	2	ARANDELA MUELLE	SPRING WASHER	RONDELLE RESSORT	
33	4374	4	ARANDELA PLANA	PLAIN WASHER	RONDELLE PLANE	
34	181184	2	TUERCA	NUT	ECROU	
35	336536	1	CLIP	CLIP	CLIP	
36	182113	3	TORNILLO	BOLT	BOULON	
37	3817	6	ARANDELA PLANA	PLAIN WASHER	RONDELLE PLANE	
38	3074	3	ARANDELA MUELLE	SPRING WASHER	RONDELLE RESSORT	
39	181184	3	TUERCA	NUT	ECROU	

140523

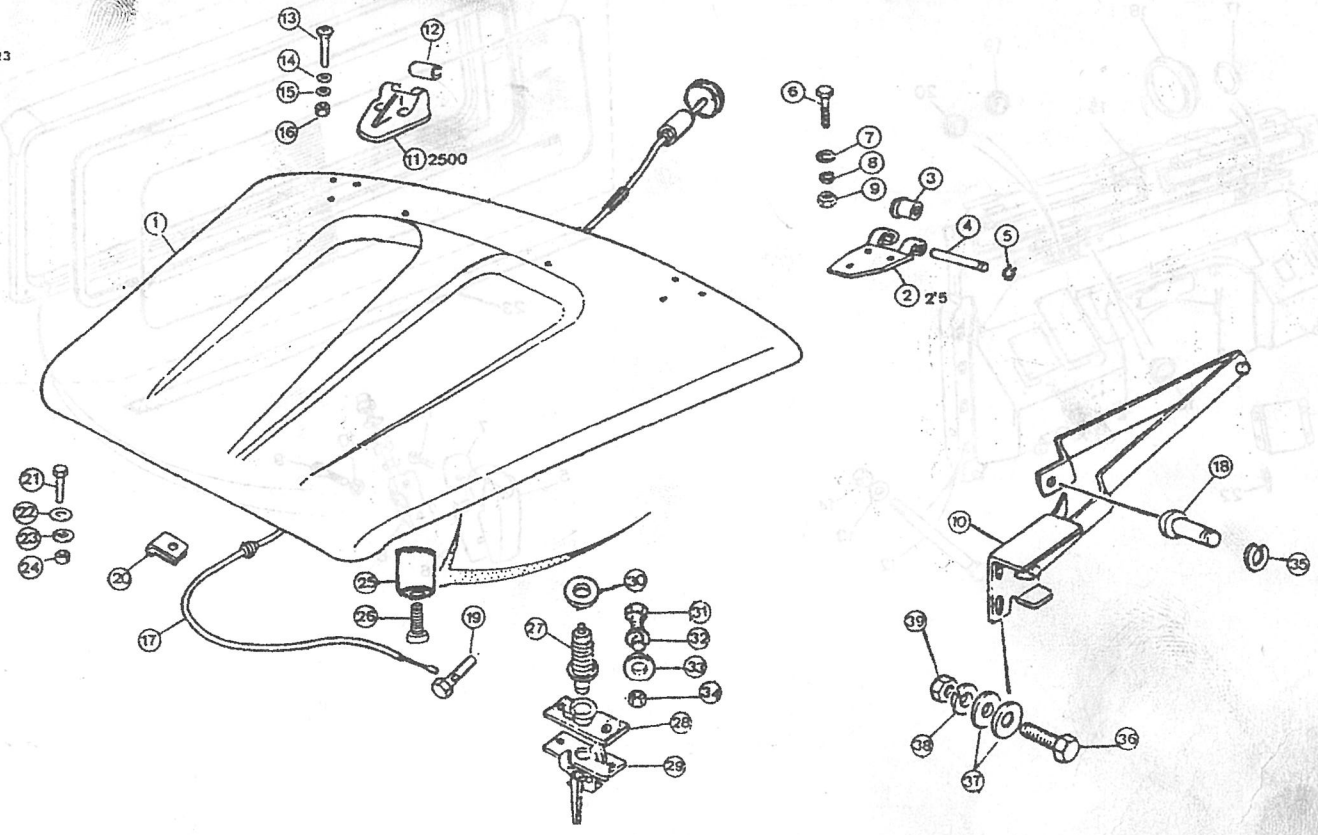

PUBLICACION N:790776
EDICION N: 1

GRUPO=14 CARROCERIA
GROUP=14 BODY
GROUPE=14 CARROSSERIE

SUBGRUPO=SALPICADERO Y PARABR
SUBGROUP=DASH AND WINDSCREEN
SUBGROUPE=TABLIER ET PAREBRISS

N.FIG PLATE N.FIG	N.PIEZA PARTNUMBER N.PIECE	CAN QTY OUT	DENOMINACION	DESCRIPTION	DENOMINATION	OBSERVACIONES
1	MUC2592	1	PARABRISAS	WINDSCREEN	PAREBRISE	
2	MTC2864	1	CRISTAL	GLASS	CRISTAL	
3	MUC3733	1	GOMA	RUBBER	CAONTCHONC	
4	MUC2594	1	BASTIDOR PARABRISAS	WINDSCREEN FRAME	CHASSIS PAREBRISES	
5	MUC3530	1	BISAGRA L/D	HINGE RH	CHARNIERE CD	
	MUC3531	1	BISAGRA L/I	HINGE LH	CHARNIERE CG	
6	MUC7903	2	JUNTA	JOINT	JOINT	
7	MUC7904	2	JUNTA	JOINT	JOINT	
8	MTC4400	2	ABRAZADERA	CLAMP	ETRIER	
9	189521	4	TORNILLO	BOLT	BOULON	
10	054760	4	ARANDELA	WASHER	RONDELLE	
11	SE110401	2	TORNILLO	BOLT	BOULON	
12	336738	2	TORNILLO	BOLT	BOULON	
13	4171	2	ARANDELA	WASHER	RONDELLE	
14	254814	2	TUERCA	NUT	ECROU	
15	MTC7491K2	1	SALPICADERO	DASH	TABLIER	
16	332647	2	TOPE PARA CAPO	BUFFER FOR BONNET	BOUCHON POUR CAPOT	
17	338023	2	TAPON	PLUG	BOUCHON	
18	338024	1	TAPON	PLUG	BOUCHON	
19	276054	1	ARANDELA DE GOMA	RUBBER WASHER	RONDELLE DE CAOUTCHO	
20	555711	2	ARANDELA DE GOMA	RUBBER WASHER	RONDELLE DE CAOUTCHO	
21	PRC3037	1	CUBIERTA	COVER	COUVERCLE	
22	BRC8089	4	REMACHE DE PLASTICO	PLASTIC RIVET	RIVET EN PLASTIQUE	
23	205960	1	JUNTA	JOINT	JOINT	

140604

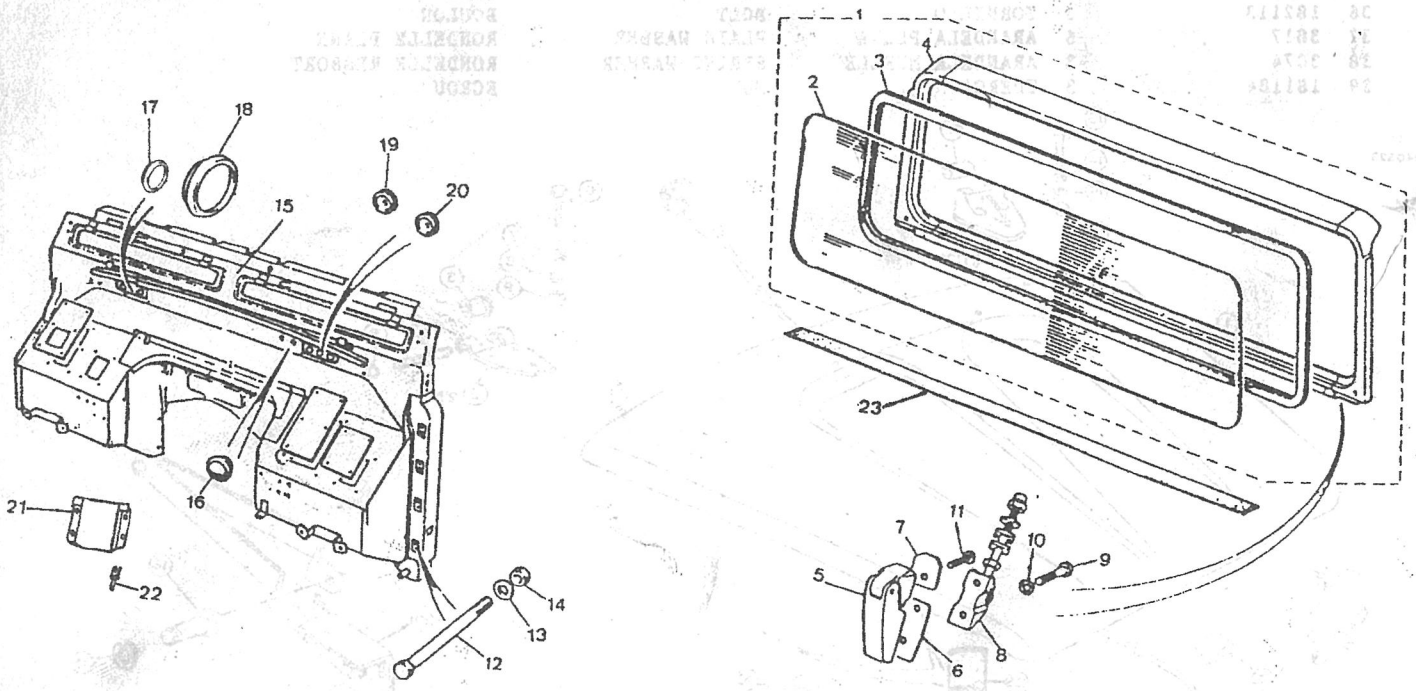

PUBLICACION N:790776
EDICION N: 1

GRUPO=14 CARROCERIA
GROUP=14 BODY
GROUPE=14 CARROSSERIE

SUBGRUPO=SALPICADERO Y PARABR
SUBGROUP=DASH AND WINDSCREEN
SUBGROUPE=TABLIER ET PAREBRISS

N.FIG PLATE N.FIG	N.PIEZA PARTNUMBER N.PIECE	CAN QTY OUT	DENOMINACION	DESCRIPTION	DENOMINATION	OBSERVACIONES
1	MUC2592	1	PARABRISAS	WINDSCREEN	PAREBRISE	
2	MTC2864	1	CRISTAL	GLASS	CRISTAL	
3	MUC3733	1	GOMA	RUBBER	CAOUTCHOUC	
4	MUC2594	1	BASTIDOR PARABRISAS	WINDSCREEN FRAME	CHASSIS PAREBRISSE	
5	MUC3530	1	BISAGRA L/D	HINGE RH	CHARNIERE CD	
	MUC3531	1	BISAGRA L/I	HINGE LH	CHARNIERE CG	
6	MUC7903	2	JUNTA	JOINT	JOINT	
7	MUC7904	2	JUNTA	JOINT	JOINT	
8	MTC4400	2	ABRAZADERA	CLAMP	ETRIER	
9	189521	4	TORNILLO	BOLT	BOULON	
10	054760	4	ARANDELA	WASHER	RONDELLE	
11	SE110401	2	TORNILLO	BOLT	BOULON	
12	336738	2	TORNILLO	BOLT	BOULON	
13	4171	2	ARANDELA	WASHER	RONDELLE	
14	254814	2	TUERCA	NUT	ECROU	
15	738120	1	SALPICADERO	DASH	TABLIER	
16	332647	2	TOPE PARA CAPO	BUFFER FOR BONNET	BOUCHON POUR CAPOT	
17	338023	2	TAPON	PLUG	BOUCHON	
18	09308-14006	2	ARANDELA DE GOMA	RUBBER WASHER	RONDELLE DE CAOUTCHO	
19	205960	1	JUNTA	JOINT	JOINT	
20	555711	2	ARANDELA DE GOMA	RUBBER WASHER	RONDELLE DE CAOUTCHO	

cristal parabrisas (antiguo) → REF: 202905

1406044

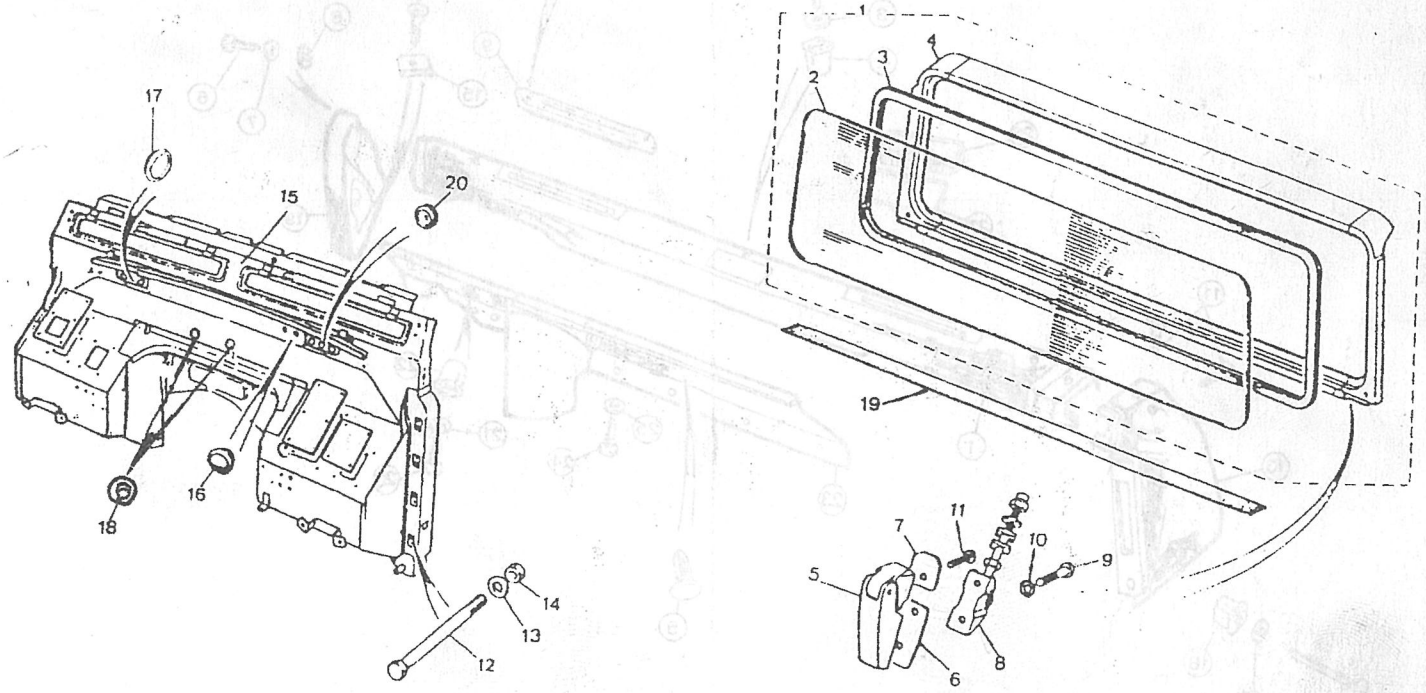

PUBLICACION N:790776 GRUPO=14 CARROCERIA SUBGRUPO=PANEL SUPERIOR SALPI
EDICION N: 1 GROUP=14 BODY SUBGROUP=DASH UPPER PANEL
GROUPE=14 CARROSSERIE SUBGROUPE=PANNEAU SUPERIEUR TD

N.FIG PLATE N.FIG	N.PIEZA PARTNUMBER N.PIECE	CAN QTY OUT	DENOMINACION	DESCRIPTION	DENOMINATION	OBSERVACIONES
1	MWC9327PUA	1	PANEL SUPERIOR SALPI	UPPER CRASH PAD-WITH	PANNEAU SUPERIEUR TA	
2	AB614064	8	TORNILLO	SCREW	VIS	
3	WA106041	3	ARANDELA PLANA	PLAIN WASHER	RONDELLE PLANE	
4	CZK3164	3	TUERCA PLASTICO	LOKUT NUT	ECROU PLASTIQUE	
5	AFU1897	2	REMACHE DE PLASTICO	DRIVE FASTENER-TRIM	RIVET PLASTIQUE	
6	SE105124	1	TORNILLO	BOLT	BOULON	
7	184255	1	ARANDELA	WASHER	RONDELLE	
8	74236E1	1	ARANDELA ESTRELLA	STARLOCK WASHER	RONDELLE ETOILE	
9	MTC6040	2	TAPA SALIDA AIRE	DEMISTER OUTLET	COUVERCLE SORTIE AIR	
10	00008-00000	4	TORNILLO	BOLT	BOULON	
11	79245	2	TORNILLO	BOLT	BOULON	
12	RTC3745	4	TUERCA PLASTICO	LOKUT NUT	ECROU PLASTIQUE	
13	MWC9339	1	REMATE LATERAL L/I	END CLOSING TRIM LH	PANNEAU LATERAL CG	
14	189519	1	TORNILLO	BOLT	BOULON	
15	730929	1	TUERCA MUELLE	SPRING NUT	ECROU RESSORT	
16	AB610124	1	TORNILLO	SCREW	VIS	
17	184255	1	ARANDELA	WASHER	RONDELLE	
18	RTC3745	1	TUERCA PLASTICO	LOKUT NUT	ECROU PLASTIQUE	
19	MTC6142	1	REMATE LATERAL L/D	END CLOSING TRIM RH	PANNEAU LATERAL CD	
20	00008-00000	2	TORNILLO	BOLT	BOULON	
21	184255	2	ARANDELA	WASHER	RONDELLE	
22	RTC3745	2	TUERCA PLASTICO	LOKUT NUT	ECROU PLASTIQUE	
23	MTC4618	1	PANEL ACONDICIONADOR	TRIM PANEL-AIR	PANNEAU SORTIE AIR	
24	185254	6	TORNILLO	BOLT	BOULON	
25	184255	6	ARANDELA	WASHER	RONDELLE	
26	DZA5097	1	CENICERO	ASH TRAY	CENDRIER	
27	MUC1582	1	SOPORTE CENICERO	ASHTRAY BRACKET	SUPPORT CENDRIER	

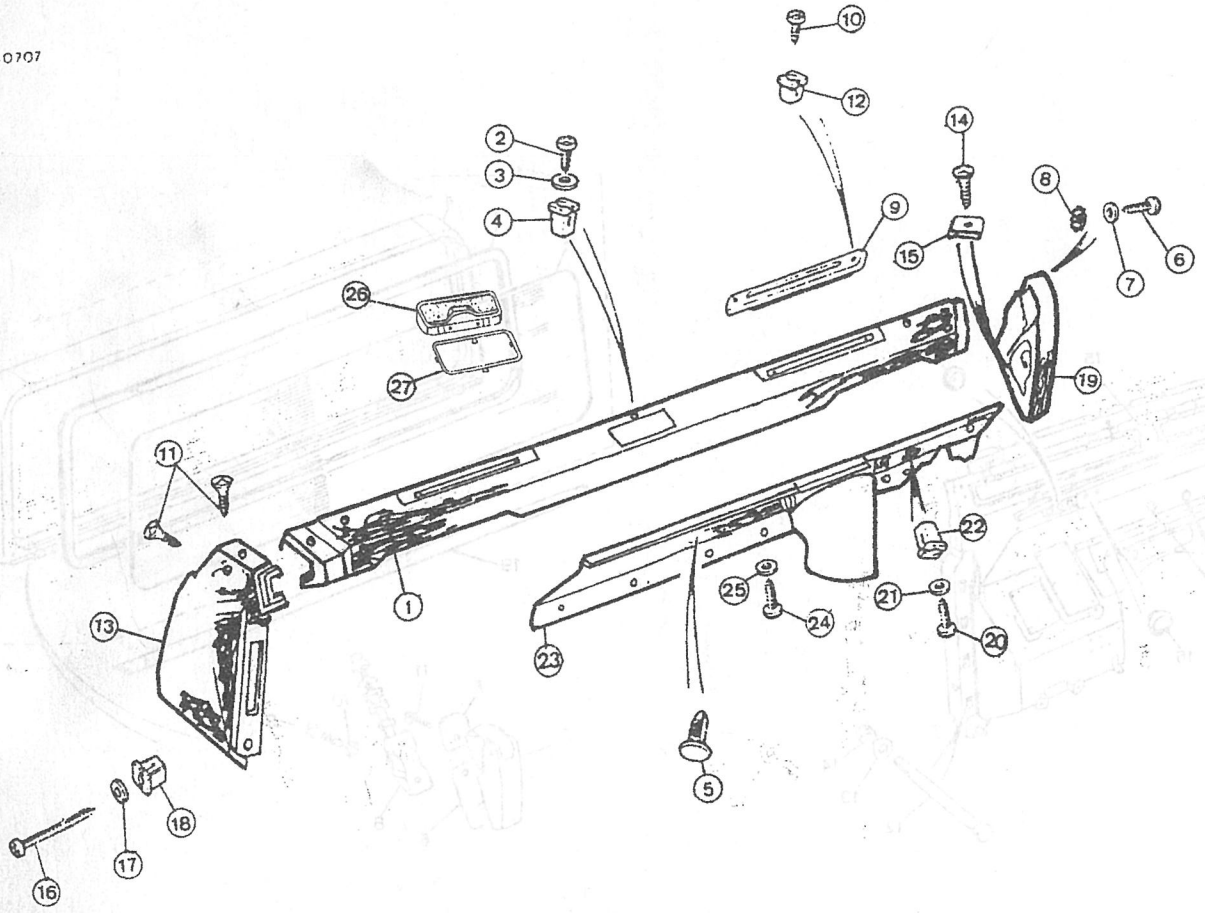

PUBLICACION N:790776 GRUPO=14 CARROCERIA SUBGRUPO=PANEL DE SALPICADERO
EDICION N: 1 GROUP=14 BODY SUBGROUP=PANEL OF DASH
GROUPE=14 CARROSSERIE SUBGROUPE=PANNEAU DE TABLIER

N.FIG PLATE N.FIG	N.PIEZA PARTNUMBER N.PIECE	CAN QTY OUT	DENOMINACION	DESCRIPTION	DENOMINATION	OBSERVACIONES
1	MTC2827	1	CONS PANEL DE SALPIC	HEATER DUCT PADDED A	ENS PROTECTION TABLE	
2	MTC6080K1	1	TAPA MOTOR LIMPIAPAR	WIPER MOTOR COVER-PA	COUVERCLE MOTEUR ESS	
3	185254	10	TORNILLO	SCREW	VIS	
4	184255	10	ARANDELA	WASHER	RONDELLE	
5	369077	10	TUERCA	NUT	ECROU	
6	266992	10	ARANDELA DE GOMA	RUBBER WASHER	RONDELLE DE CAOUTCHO	
7	MTC6871	1	JUNTA CALEFACCION	SEAL-HEATER DUCT	JOINT CHAUFFAGE	
8	78485	21	TORNILLO	BOLT	BOULON	
9	78944	3	TORNILLO	BOLT	BOULON	
10	PRC2443K1	1	SOPORTE CAJA FUSIBLE	FUSE BOX BRACKET	SUPPORT DE BOITE DE	
11	MUC7905	1	TAPA CAJA FISIBLES	FUSE BOX COVER	COUVERCLE DE BOITE D	
12	MTC9968	2	TORNILLO FIJACION	SCREW-FIXING COVER	VIS FIXATON COUVERCL	
13	MTC6167	1	PERFIL DE REFUERZO	FINISHER	PROFIL DE RENFORCEME	
14	MRC8585	1	PANEL DE CIERRE E IN	CLOSING PANEL AND IN	PANNEAU DE FERMETURE	
15	MRC7283	1	GUANTERA	PARCEL TRAY	BOITE A GANTS	
16	77993	4	TORNILLO	BOLT	BOULON	
17	166662	4	CASQUILLO	BUSH	BAGUE	
18	3816	4	ARANDELA PLANA	PLAIN WASHER	RONDELLE PLANE	
19	054959	4	ARANDELA	WASHER	RONDELLE	
20	180124	4	TUERCA	NUT	ECROU	
21	SE106121	2	TORNILLO	BOLT	BOULON	
22	052257	2	ARANDELA	WASHER	RONDELLE	
23	121455	1	PLACA INSTRUCCIONES	INSTRUCTIONS PLATE	PLAQUE D'INSTRUCTION	
24	395829	1	CONDUCTO DE AIRE L/D	AIR CONDUCT RH	CONDUIT D'AIR CD	
	395830	1	CONDUCTO AIRE L/I	AIR CONDUCT LH	CONDUIT D'AIR CG	
25	185254	4	TORNILLO	BOLT	BOULON	
26	257020	2	TORNILLO	BOLT	BOULON	
27	08321A31056	2	ARANDELA MUELLE	SPRING WASHER	RONDELLE RESSORT	
28	3816	2	ARANDELA PLANA	PLAIN WASHER	RONDELLE PLANE	
29	79239	2	TUERCA REMACHE	NUT SERT	ECROU DE RIVET	

140708

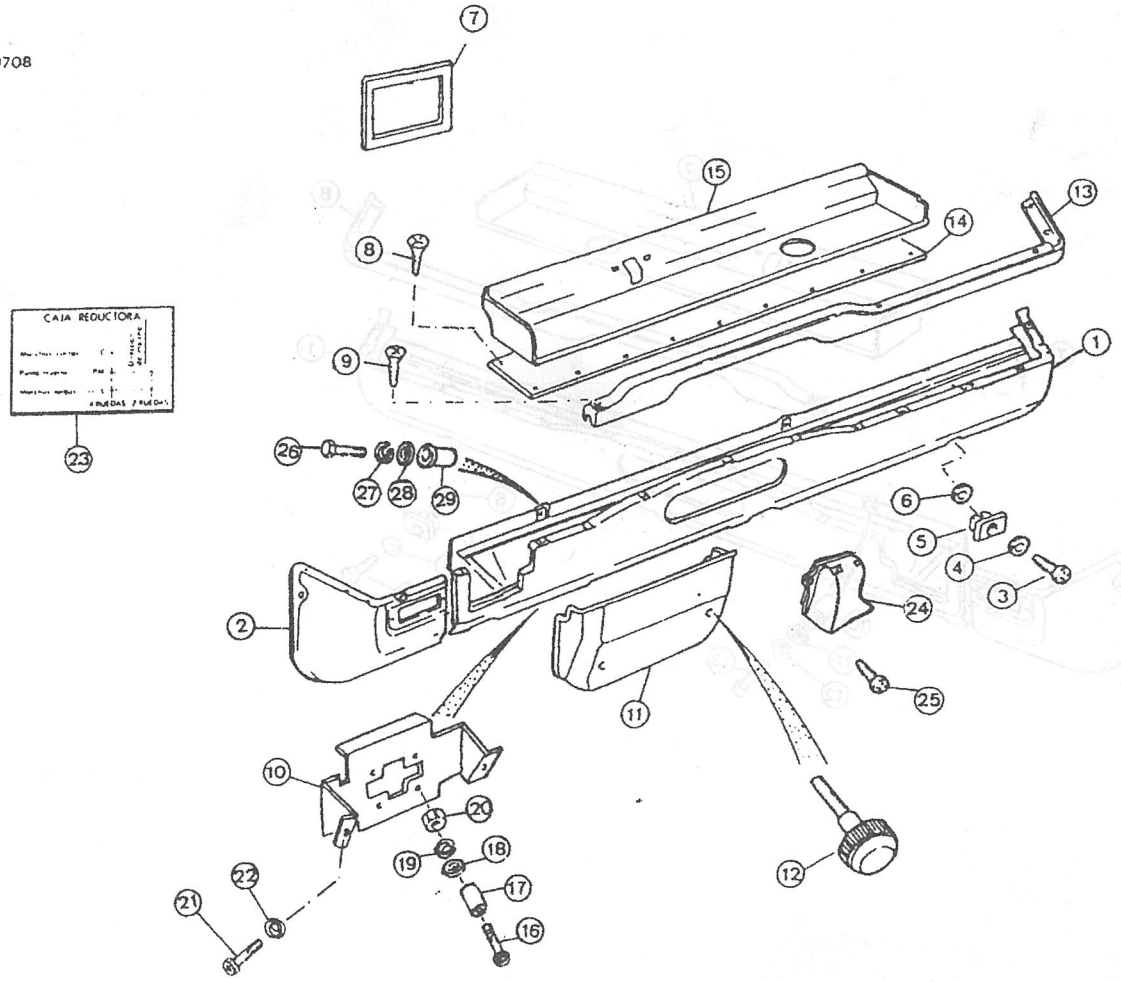

PUBLICACION N:790776 GRUPO=14 CARROCERIA SUBGRUPO=PANEL DE SALPICADERO
EDICION N: 1 GROUP=14 BODY SUBGROUP=PANEL OF DASH
GROUPE=14 CARROSSERIE SUBGROUPE=PANNEAU DE TABLIER

N.FIG PLATE N.FIG	N.PIEZA PARTNUMBER N.PIECE	CAN QTY OUT	DENOMINACION	DESCRIPTION	DENOMINATION	OBSERVACIONES
1	346724K3	1	CONJ.PANEL SALPICADE	HEATER DUCT PADDED A	ENS PROTECTION TABLI	
2	347698K1	1	TAPA MOTOR LIMPIAPAR	WIPER MOTOR COVER-PA	COUVERCLE MOTEUR ESS	
3	185254	10	TORNILLO	BOLT	BOULON	
4	184255	10	ARANDELA	WASHER	RONDELLE	
5	369077	10	TUERCA PLASTICO	LOKUT NUT	ECROU PLASTIQUE	
6	266992	10	ARANDELA GOMA	RUBBER WASHER	RONDELLE CAOUTCHOUC	
7	78944	3	TORNILLO	BOLT	BOULON	
8	MTC6167	1	PERFIL DE REFUERZO	FINISHER	PROFIL DE RENFORCEME	
9	395508K1	1	GUANTERA	PARCEL TRAY	BOITE A GANTS	
10	79239	2	TUERCA REMACHE	NUT SERT	ECROU DE RIVET	
11	3816	2	ARANDELA PLANA	PLAIN WASHER	RONDELLE PLANE	
12	08321A31056	2	ARANDELA MUELLE	SPRING WASHER	RONDELLE RESSORT	
13	257020	2	TORNILLO	BOLT	BOULON	

1407081

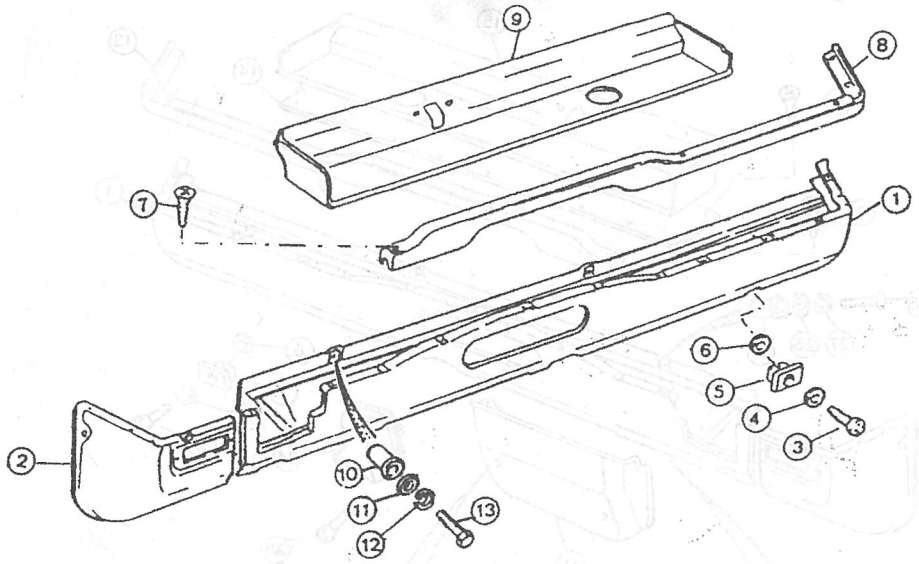

PUBLICACION N:790776 GRUPO=14 CARROCERIA SUBGRUPO=CLAPETA DE VENTILACI
EDICION N: 1 GROUP=14 BODY SUBGROUP=AERATION LID
GROUPE=14 CARROSSERIE SUBGROUPE=VOLET DE VENTILACION

N.FIG PLATE N.FIG	N.PIEZA PARTNUMBER N.PIECE	CAN QTY OUT	DENOMINACION	DESCRIPTION	DENOMINATION	OBSERVACIONES
1	MTC4145	1	PLACA	PLATE	PLAQUE	
2	155088	2	MOSQUITERA LARGA	LONG FLYSCREEN	MOUSTIQUAIRE LONG	
	155089	2	MOSQUITERA CORTA	SMALL FLYSCREEN	MOUSTIQUAIRE COURT	
3	396139	2	GOMA SELLANTE	SEALING RUBBER	CAOUTCHOUC COURT	
4	346576	2	MANDO DE VENTILACION	VENTILATOR CONTROL	COMANDE DE VENTILATE	
5	SH105121	4	TORNILLO	BOLT	BOULON	
6	3073	4	ARANDELA MUELLE	SPRING WASHER	RONDELLE RESSORT	
7	3816	4	ARANDELA PLANA	PLAIN WASHER	RONDELLE PLANE	
8	78137	4	TORNILLO	SCREW	VIS	
9	3816	4	ARANDELA PLANA	PLAIN WASHER	RONDELLE PLANE	
10	79013	4	TUERCA	NUT	ECROV	
11	78921	20	TORNILLO	SCREW	VIS	
12	3816	11	ARANDELA PLANA	PLAIN WASHER	RONDELLE PLANE	
13	RTC3745	5	TUERCA	NUT	ECROV	
14	78137	11	TORNILLO	BOLT	BOULON	
15	334121	4	PASADOR	HINGE PIN	GOUPILLE DE CHARNIER	
16	345845K1	1	CLAPETA L/D	LID RH	VOLET CD	
	345846K1	1	CLAPETA L/I	LID LH	VOLET CG	

140805

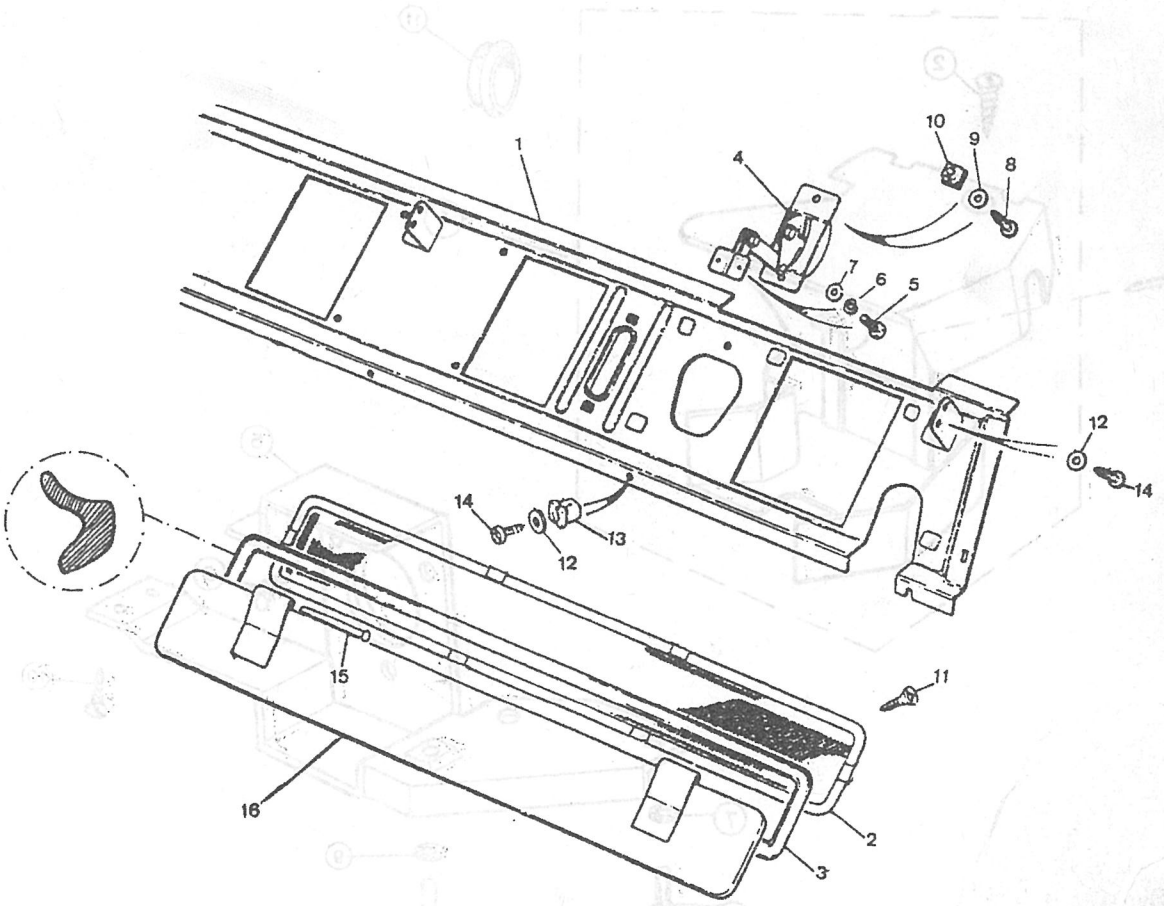

PUBLICACION N:790776 GRUPO=14 CARROCERIA SUBGRUPO=TAPA MANDO DE INSTRU
EDICION N: 1 GROUP=14 BODY SUBGROUP=INSTRUMENTS COVER
GROUPE=14 CARROSSERIE SUBGROUPE=COUVERCLE DE MANDO

N.FIG PLATE N.FIG	N.PIEZA PARTNUMBER N.PIECE	CAN QTY OUT	DENOMINACION	DESCRIPTION	DENOMINATION	OBSERVACIONES
1	108243	1	CONJ CUBIERTA	SHROUD ASSY	ENS CUBIERTA	
2	09103A08152	2	TORNILLO	BOLT	BOULON	
3	78485	3	TORNILLO	BOLT	BOULON	
4	AB606084	2	TORNILLO	BOLT	BOULON	
5	166665	1	SOPORTE SUP COLUMNA	COLUMN TOP SUPPORT	SUPPORT PYLONE DIREC	
6	02112-05126	2	TORNILLO	BOLT	BOULON	
7	08321A31066	2	ARANDELA ESTRELLA	STAR WASHER	RONDELLE ETOILE	
8	SP105204	1	TORNILLO	BOLT	BOULON	
9	184255	1	ARANDELA PLANA	PLAIN WASHER	RONDELLE PLANE	
10	03141T04106	2	TORNILLO	BOLT	BOULON	
11	205405	1	ARANDELA GOMA	RUBBER WASHER	RONDELLE CAOUTCHOUC	

140909

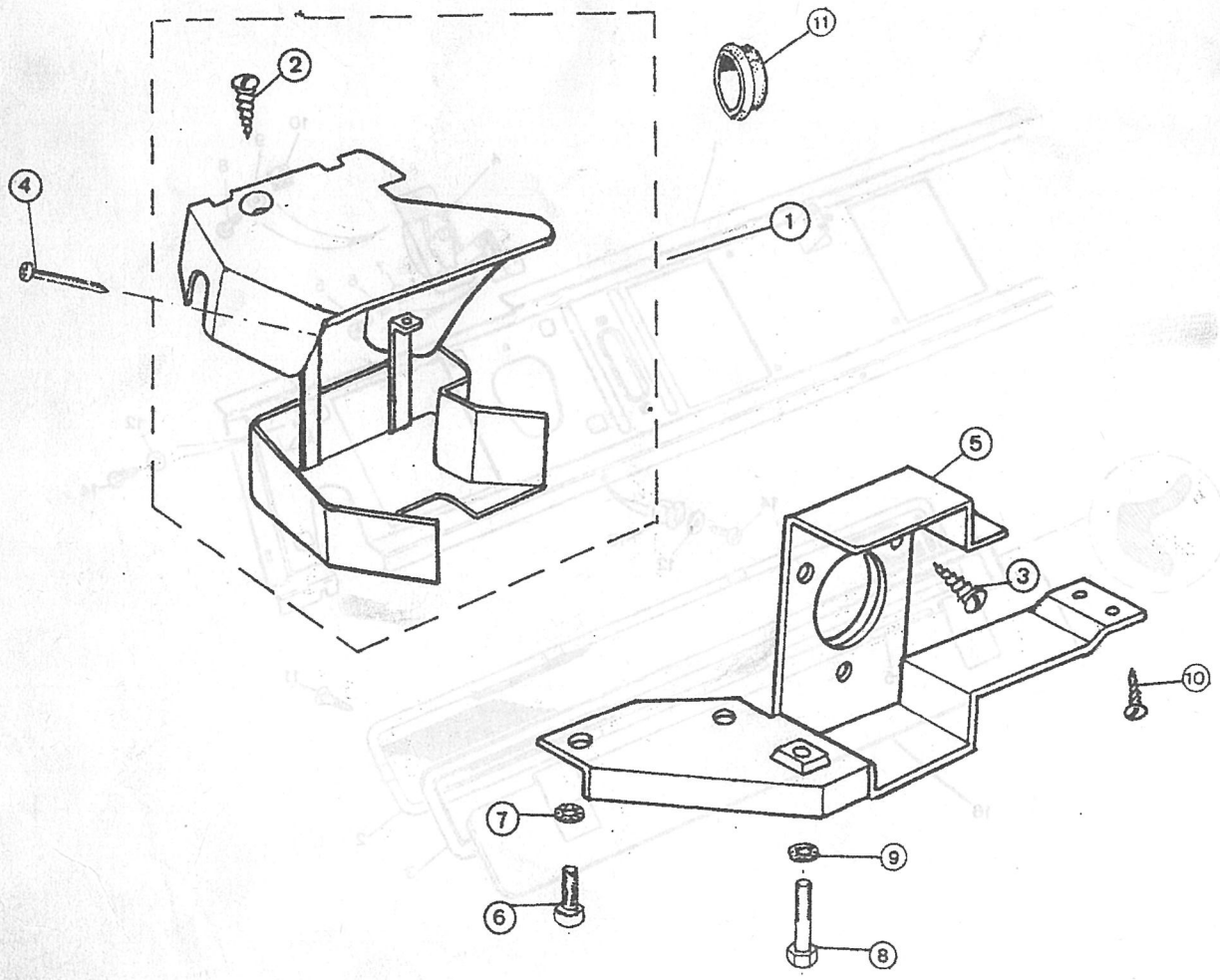

PUBLICACION N:790776 GRUPO=14 CARROCERIA SUBGRUPO=PUERTAS DELANTERAS
EDICION N: 1 GROUP=14 BODY SUBGROUP=FRONT DOOR
GROUPE=14 CARROSSERIE SUBGROUPE=PORTES AVANT

N.FIG PLATE N.FIG	N.PIEZA PARTNUMBER N.PIECE	CAN QTY OUT	DENOMINACION	DESCRIPTION	DENOMINATION	OBSERVACIONES
1	206917	1	CONJ.PUERTA L/D	DOOR ASSY RH	ENS PORTE CD	
	206918	1	CONJ.PUERTA L/I	DOOR ASSY LH	ENS PORTE CG	
2	206545	1	PUERTA L/I	DOOR LH	PORTE CG	
	206546	1	PUERTA L/D	DOOR RH	PORTE CD	
3	201945	1	PANEL PUERTA L/I	DOOR PANEL LH	PANNEAU PORTE CG	
	201946	1	PANEL PUERTA L/D	DOOR PANEL RH	PANNEAU PORTE CD	
4	203421	2	CRISTAL	GLASS	GLACE	
5	204179	2	PERFIL DE GOMA	RUBBER PROFILE	PROFIL DE CAOUTCHOUC	
6	206981	2	PERFIL	PROFILE	PROFIL	
7	204236	1	CERRADURA L/I	LOCK LH	SERRURE CG	
	204237	1	CERRADURA L/D	LOCK RH	SERRURE CD	
8	204147	2	EMPU\ADURA	CONTROL KNOB	BOUTON	
9	206575	1	ELEVALUNAS L/I	WINDOW OPENER LH	ELEVATEUR DE GLA CG	
	206576	1	ELEVALUNAS L/D	WINDOW OPENER RH	ELEVATEUR DE GLA CD	
10	204277	1	TAPICERIA L/I	TRIM LH	GARNITURE CG	
	204278	1	TAPICERIA L/D	TRIM RH	GARNITURE CD	
11	204160	2	FIJACION	FIXING	FIXATION	
12	206988	1	VARILLA L/I	TIE ROD LH	TIRANT CG	
	206989	1	VARILLA L/D	TIE ROD RH	TIRANT CD	
13	206843	2	BISAGRA L/D	HINGE RH	CHARNIERE CD	
	206844	2	BISAGRA L/I	HINGE LH	CHARNIERE CG	
14	204159	1	PERFIL SUPERIOR L/D	UPPER PROFILE RH	PROFIL SUPERIEUR CD	
	204249	1	PERFIL SUPERIOR L/I	UPPER PROFILE LH	PROFIL SUPERIEUR CG	
15	301346	4	TAPON	PLUG	BOUCHON	
16	203618	8	TUERCA	NUT	ECROU	
17	088190	8	ARANDELA	WASHER	RONDELLE	
18	237120	4	TORNILLO	BOLT	BOULON	
19	3816	8	ARANDELA	WASHER	RONDELLE	
20	257023	4	TUERCA	NUT	ECROU	
21	78248	6	REMACHE	RIVET	RIVET	
22	02132-05205	4	TORNILLO	BOLT	BOULON	
23	MUC4072	2	CANAL PARA CRISTAL	GLASS CHANNEL	CANAL POUR VITRE	
24	MTC8468	2	CANAL PARA CRISTAL	GLASS CHANNEL	CANAL POUR VITRE	
25	MUC4071	2	CANAL PARA CRISTAL	GLASS CHANNEL	CANAL POUR VITRE	
26	201647	2	REFUERZO DELANTERO	FRONT REINFORCEMENT	RENFORT AVANT	
27	201235	2	REFUERZO TRASERO	REAR REINFORCEMENT	RENFORT ARRIERE	
28	070838	12	REMACHE	RIVET	RIVET	
29	204168	2	GOMA 725 MM	RUBBER 725 MM	CAOUTCHOUC 725 MM	
30	204166	2	GOMA 810 MM	RUBBER 810 MM	CAOUTCHOUC 810 MM	
31	201232	S-N	SUPLEMENTO	SHIM	SUPPLEMENT	
32	201233	1	PIEZA RELLENO L/I	BACK PACKING STRA LH	BANDE GARNISSAGE CG	
	201234	1	TIRA RELLENO L/D	BACK PACKING STRA RH	BANDE GARNISSAGE CD	
33	201237	2	TIRA RELLENO	BACK PACKING STRAP	BANDE GARNISSAGE	
34	201643	2	TIRA RELLENO	BACK PACKING STRAP	BANDE GARNISSAGE	

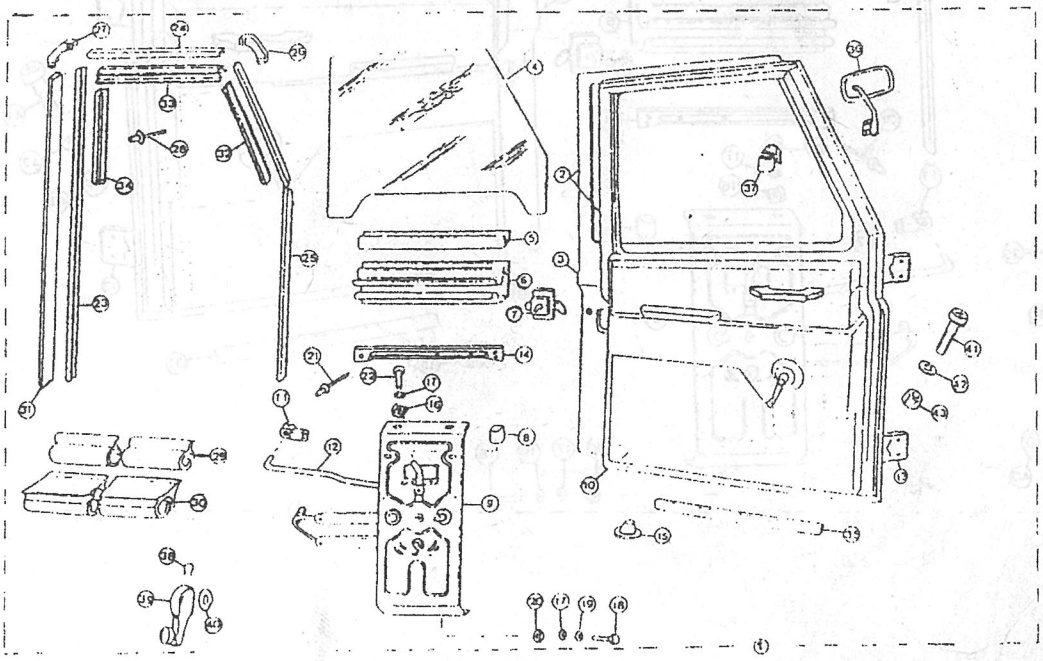

PUBLICACION N:790776 GRUPO=14 CARROCERIA SUBGRUPO=PUERTAS DELANTERAS
EDICION N: 1 GROUP=14 BODY SUBGROUP=FRONT DOOR
GROUPE=14 CARROSSERIE SUBGROUPE=PORTES AVANT

N.FIG PLATE N.FIG	N.PIEZA PARTNUMBER N.PIECE	CAN QTY OUT	DENOMINACION	DESCRIPTION	DENOMINATION	OBSERVACIONES
35	203811	2	TIRA SELLANTE 1660 M	SEAL STRIP 1660 MM	BANDE SCELLEUR 1660	
36	206889	1	ESPEJO RETROVISOR LI	MIRROR LH	RETROVISEUR CG	
	206890	1	ESPEJO RE.L/D(EXTRA)	MIRROR RH (EXTRA)	RETROVISE CD (EXTRA)	
37	78861-78400	2	GUIA CRISTAL	GLASS GUIDE	GUIDE DE GLACE	
38	183258	2	CLIP	CLIP	CLIP	
39	203751	2	MANIVELA	CRANK	MANIEVELLE	
40	78472-78000	2	SEPARADOR	SPACER	ENTRETOISE	
41	183283	6	TORNILLO	BOLT	BOULON	
	185267	2	TORNILLO	BOLT	BOULON	
42	WM108001	8	ARANDELA MUELLE	SPRING WASHER	RONDELLE RESSORT	
43	181185	8	TUERCA	NUT	ECROU	

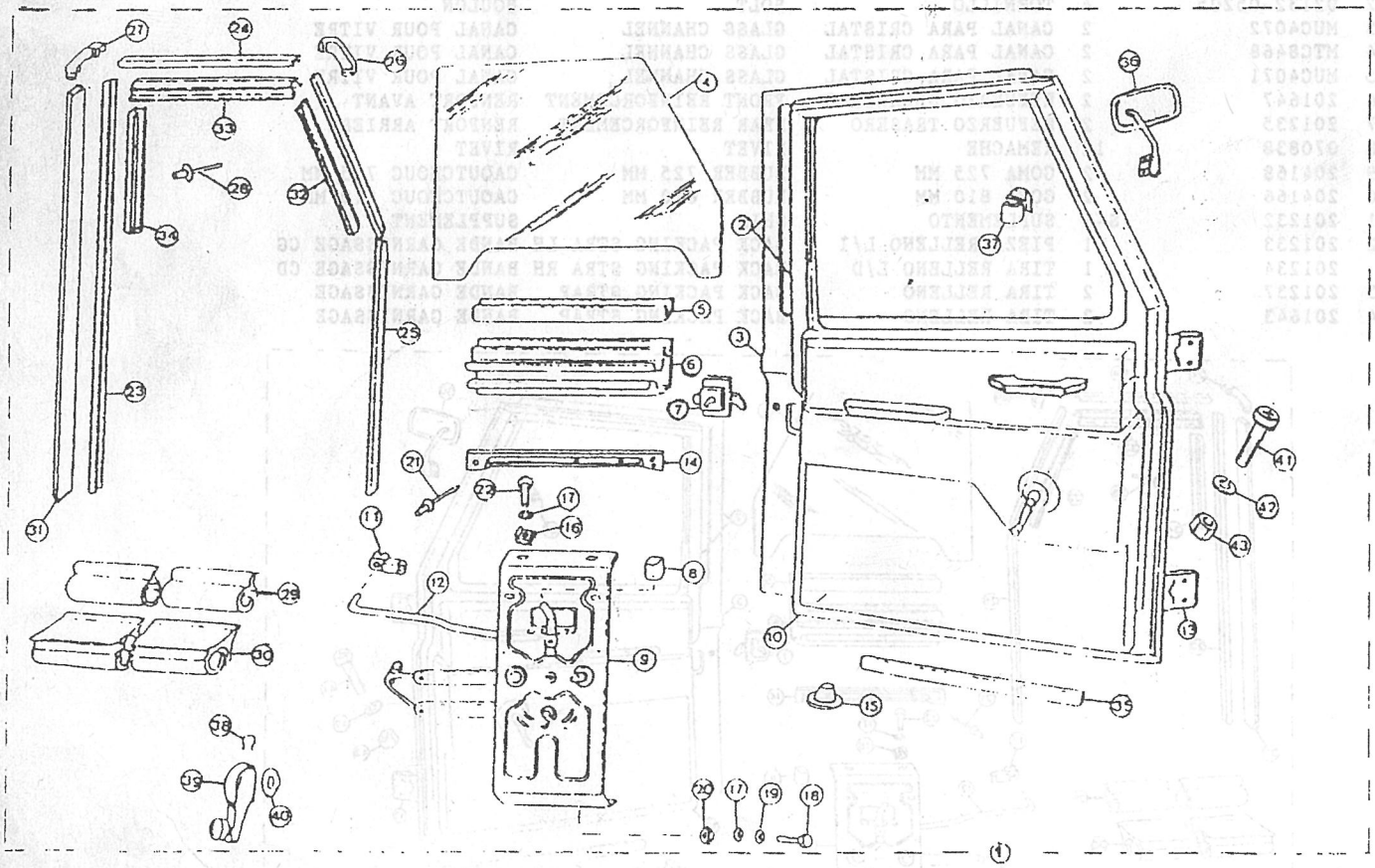

PUBLICACION N:790776 GRUPO=14 CARROCERIA SUBGRUPO=PUERTAS LATERAL TRAS
EDICION N: 1 GROUP=14 BODY SUBGROUP=SIDE REAR DOOR
GROUPE=14 CARROSSERIE SUBGROUPE=PORTES LATERALE ARRI

N.FIG PLATE N.FIG	N.PIEZA PARTNUMBER N.PIECE	CAN QTY OUT	DENOMINACION	DESCRIPTION	DENOMINATION	OBSERVACIONES
1	206567	1	CONJ PUERTA L I	DOOR ASSY L H	ENS PORTE C G	D 5-84 H 1-87
	206568	1	CONJ PUERTA L D	DOOR ASSY R H	ENS PORTE C D	D 5-84 H 1-87
2	206522	1	PUERTA L I	DOOR L H	PORTE C G	
	206523	1	PUERTA L D	DOOR R H	PORTE C D	
3	201947	1	PANEL PUERTA L I	DOOR PANEL L H	PANNEAU PORTE C G	
	201948	1	PANEL PUERTA L D	DOOR PANEL R H	PANNEAU PORTE C D	
4	206843	2	BISAGRA L/D	HINGE RH	CHARNIERE CD	
	206844	2	BISAGRA L/I	HINGE LH	CHARNIERE CG	
5	203811	2	TIRA SELLANTE 1480MM	SEAL STRIP 1480 MM	BANDE SCELLEUR 1480	
6	201390	2	CRISTAL	GLASS	GLACE	
7	204178	2	PERFIL	ANGLE	PROFIL	
8	206981	2	PERFIL	ANGLE	PROFIL	
9	206577	1	ELEVALUNAS L I	WINDOW OPENER L H	ELEVATEUR DE GLA C G	
	206578	1	ELEVALUNAS L D	WINDOW OPENER R H	ELEVATEUR DE GLA C D	
10	204147	2	EMPU/ADURA	CONTROL KNOB	BOUTON	
11	206990	1	VARILLA LI	TIE ROD LH	TIRANT CG	
	206991	1	VARILLA LD	TIE ROD RH	TIRANT CD	
12	204160	2	FIJACION	FIXING	FIXATION	
13	02132-05205	4	TORNILLO	BOLT	BOULON	
14	088190	8	ARANDELA	WASHER	RONDELLE	
15	203618	8	TUERCA	NUT	ECROU	
16	MTC8460	2	CRISTAL	GLASS	GLACE	
17	332647	2	TOPE	STOP	CHOC	
18	203751	2	MANIVELA	CRANK	MANIVELLE	
19	183258	2	CLIP	CLIP	CLIP	
20	204167	2	GOMA 640 MM EXTERIOR	RUBBER 640 MM	CAOUTCHOUC 640 MM	
21	204165	2	GOMA 705 MM INTERIOR	RUBBER 705 MM	CAOUTCHOUC 705 MM	
22	204223	1	SOPORTE L I	SUPPORT L H	SUPPORT C G	
	204224	1	SOPORTE L D	SUPPORT R H	SUPPORT C D	
23	075805	2	REMACHE	RIVET	RIVET	
24	78137	2	TORNILLO	SCREW	VIS	
25	301346	4	TAPON	PLUG	BOUCHON	
26	204163	2	PERFIL	ANGLE	PROFIL	
27	201235	4	REFUERZO	REINFORCEMENT	RENFORT	
28	201643	4	PERFIL	ANGLE	PROFIL	
29	204162	2	SOPORTE	SUPPORT	SUPPORT	
30	78137	4	TORNILLO	BOLT	BOULON	
31	MTC8790	2	CANAL PARA CRISTAL	GLASS CHANNEL	CANAL POUR VITRE	
32	MTC8791	2	CANAL PARA CRISTAL	GLASS CHANNEL	CANAL POUR VITRE	
33	MTC8471	2	CANAL PARA CRISTAL	GLASS CHANNEL	CANAL POUR VITRE	
34	MTC8472	2	CANAL PARA CRISTAL	GLASS CHANNEL	CANAL POUR VITRE	
35	201396	S-N	SUPLEMENTO	SHIM	SUPPLEMENT	
36	204238	1	CERRADURA L/I	LOCK LH	SERRURE CG	
	204239	1	CERRADURA L/D	LOCK RH	SERRURE CD	

141015

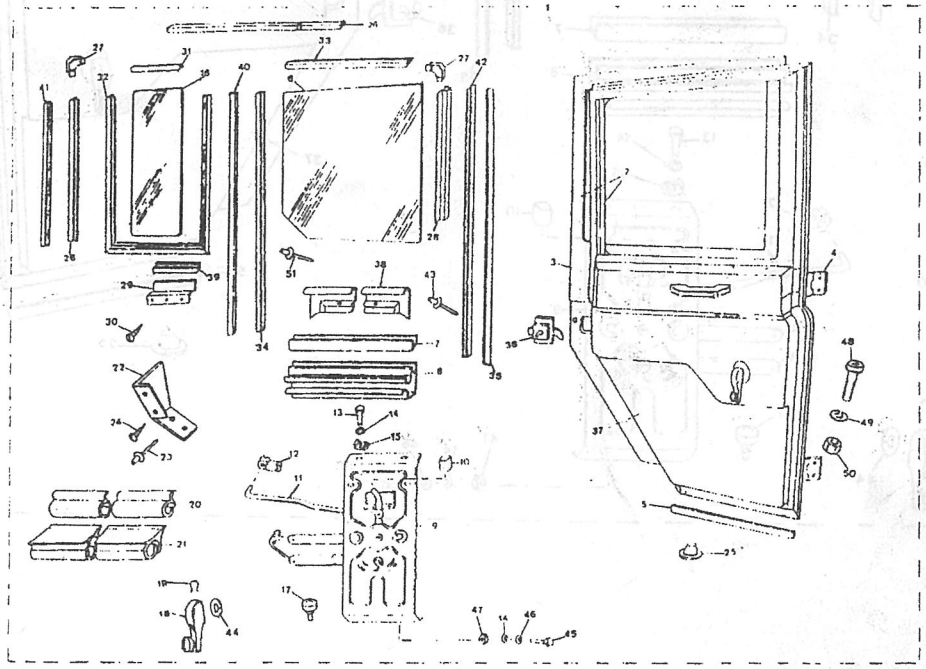

PUBLICACION N:790776 GRUPO=14 CARROCERIA SUBGRUPO=PUERTAS LATERAL TRAS
EDICION N: 1 GROUP=14 BODY SUBGROUP=SIDE REAR DOOR
GROUPE=14 CARROSSERIE SUBGROUPE=PORTES LATERALE ARRI

N.FIG PLATE N.FIG	N.PIEZA PARTNUMBER N.PIECE	CAN QTY OUT	DENOMINACION	DESCRIPTION	DENOMINATION	OBSERVACIONES
37	204279	1	TAPICERIA L/I	TRIM LH	GARNITURE CG	
	204280	1	TAPICERIA L/D	TRIM RH	GARNITURE CD	
38	204247	1	PERFIL L/I	ANGLE LH	PROFIL CG	
	204248	1	PERFIL L/D	ANGLE RH	PROFIL CD	
39	204314	2	GOMA 110 MM	RUBBER 110 MM	CAOUTCHOUC 110 MM	
40	730298	2	CANAL DOBLE	DOUBLE CHANNEL	CANAL DOUBLE	
41	205026	S-N	SUPLEMENTO	SHIM	SUPPLEMENT	
42	MUC4072	2	CANAL PARA CRISTAL	GLASS CHANNEL	CANAL POUR VITRE	
43	78248	4	REMACHE	RIVET	RIVET	
44	78472-78000	2	SEPARADOR	SPACER	ENTRETOISE	
45	237120	4	TORNILLO	BOLT	BOULON	
46	3816	8	ARANDELA	WASHER	RONDELLE	
47	257023	4	TUERCA	NUT	ECROU	
48	183283	4	TORNILLO	BOLT	BOULON	
	185267	4	TORNILLO	BOLT	BOULON	
49	WM108001	8	ARANDELA MUELLE	SPRING WASHER	RONDELLE RESSORT	
50	181185	8	TUERCA	NUT	ECROU	
51	070838	14	REMACHE	RIVET	RIVET	

141015

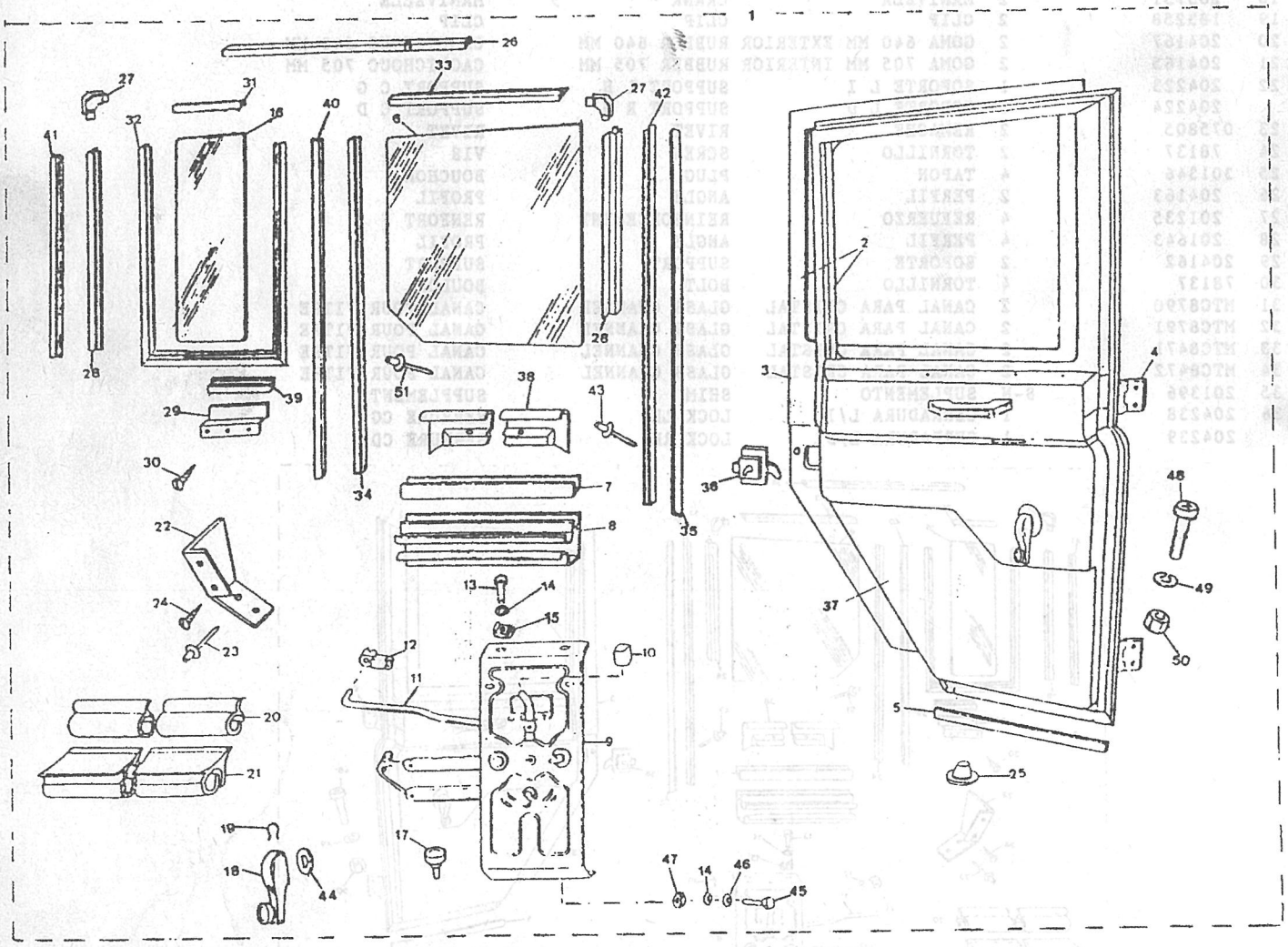

PUBLICACION N:790776 GRUPO=14 CARROCERIA SUBGRUPO=PUERTAS DELANTERAS
EDICION N: 1 GROUP=14 BODY SUBGROUP=FRONT DOOR
GROUPE=14 CARROSSERIE SUBGROUPE=PORTES AVANT

N.FIG PLATE N.FIG	N.PIEZA PARTNUMBER N.PIECE	CAN QTY OUT	DENOMINACION	DESCRIPTION	DENOMINATION	OBSERVACIONES
1	MWC2340K2	1	CONJ.PUERTA L/D	DOOR ASSY RH	ENS PORTE CD	
	MWC2341K2	1	CONJ.PUERTA L/I	DOOR ASSY LH	ENS PORTE CG	
2	MWC2324K2	1	PUERTA L/D	DOOR RH	PORTE CD	
	MWC2325K2	1	PUERTA L/I	DOOR LH	PORTE CG	
3	MUC9312	1	PANEL EXTERIOR LD	OUTDOOR PANEL RH	PANNEAU EXTERIEUR CD	
	MUC9313	1	PANEL EXTERIOR LI	OUTDOOR PANEL LH	PANNEAU EXTERIEUR CG	
4	MWC1434	1	PANEL INTERIOR LD	INDOOR PANEL RH	PANNEAU INTERIEUR CD	
	MWC1435	1	PANEL INTERIOR LI	INDOOR PANEL LH	PANNEAU INTERIEUR CG	
5	MUC3024	1	ELEVALUNAS L/D	WINDOW OPENER RH	ELEVATEUR DE GLAC CD	
	MUC3025	1	ELEVALUNAS L/I	WINDOW OPENER L/I	ELEVATEUR DE GLAC CG	
6	SH106101	18	TORNILLO	BOLT	BOULON	
7	WL106001	8	ARANDELA MUELLE	SPRING WASHER	RONDELLE RESSORT	
8	WA106041	18	ARANDELA PLANA	PLAIN WASHER	RONDELLE PLANE	
9	78861-78400	2	GUIA CRISTAL	GLASS GUIDE	GUIDE DE GLACE	
10	201647	2	ESQUINA RELLENO	FRONT CORNER FILLER	PROFIL DE COIN AVANT	
11	Y003199PMA	2	MANIVELA	CRANK	MANIVELLE	
12	Y003200PMA	2	TAPON	PLUG	BOUCHON	
13	ADU5727	2	TORNILLO	SCREW	VIS	
14	JBC9023	2	SEPARADOR	SPACER	ENTRETOISE	
15	MTC7825	2	CRISTAL	GLASS	GLACE	
16	MUC1713F1	2	PERFIL GOMA	RUBBER ANGLE	PROFIL CAOUTCHOUC	
17	MTC8477	2	SOPORTE CRISTAL	GLASS SUPPORT	SUPPORT GLACE	
18	070838	12	REMACHE	RIVET	RIVET	
19	MTC8474	2	GOMA ESCURREAGUA EXT	WAIST SEAL OUTER	CAOUTCHOUC EGOUTT EX	
20	MTC8473	2	GOMA ESCURREAGUA INT	WAIST SEAL INNER	CAOUTCHOUC AGOUTT IN	
21	201237	2	PIEZA RELLENO	BACK PACKING STRAP	BANDE GARNISSAGE	
22	MUC3285	S-N	SUPLEMENTO	SHIM	SUPPLEMENT	
23	MTC8468	2	GUIA SUPERIOR CRISTA	TOP FILLER	GUIDE SUPERIEUR GLAC	
24	201233	1	PIEZA RELLENO L/I	BACK PACKING STRA LH	BANDE GARNISSAGE CG	
	201234	1	PIEZA RELLENO L/D	BACK PACKING STRA RH	BANDE GARNISSAGE CD	
25	201235	2	ESQUINA RELLENO	REAR CORNER FILLER	PROFIL DE COIN ARRIE	
26	MUC4071	2	GUIA DELANT.CRISTAL	VERTICAL FILLER FRON	GUIDE AVANT DE GLACE	
27	MUC4072	2	GUIA VERTICAL TRASER	VERTICAL FILLER FRON	GUIDE VERTICAL ARRIE	
28	201643	2	PIEZA RELLENO	BACK PACKING STRAP	BANDE GARNISSAGE	
29	MUC4073	S-N	SUPLEMENTO	SHIM	SUPPLEMENT	

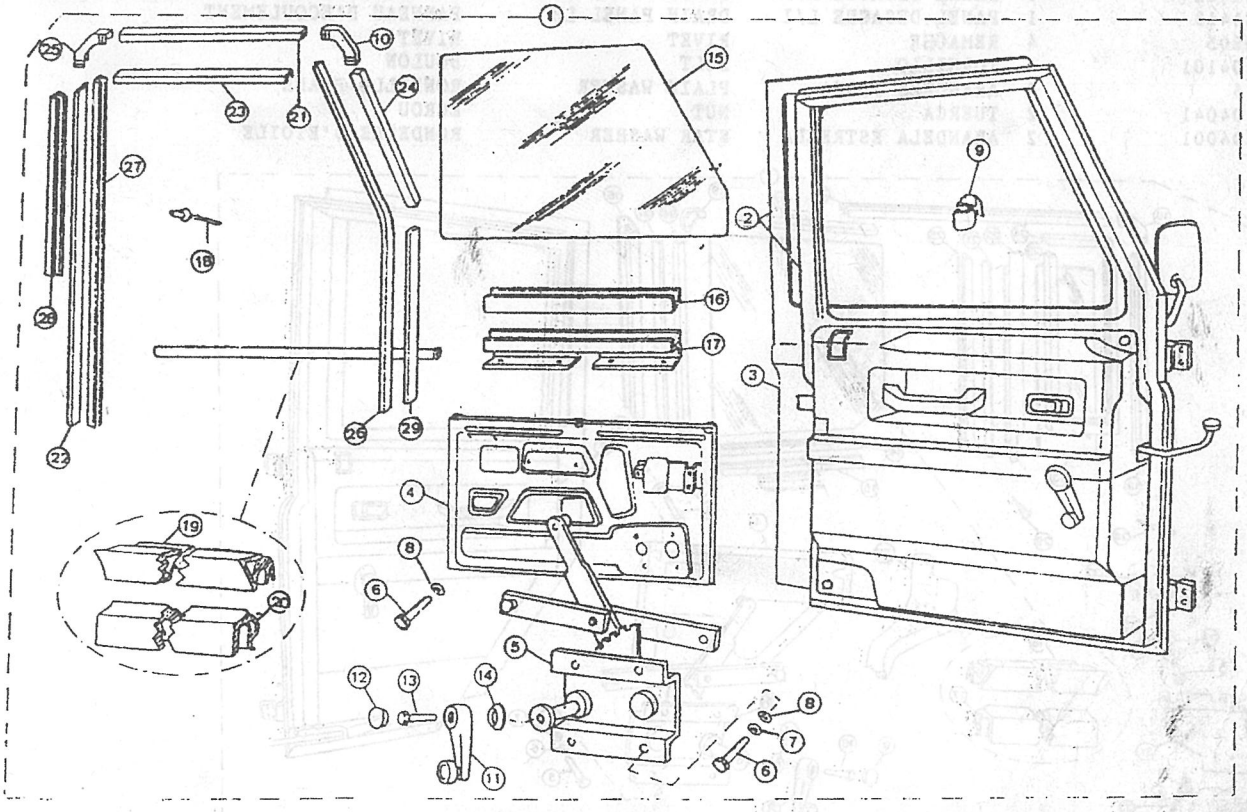

PUBLICACION N:790776 GRUPO=14 CARROCERIA SUBGRUPO=PUERTAS LATERAL TRAS
EDICION N: 1 GROUP=14 BODY SUBGROUP=SIDE REAR DOOR
GROUPE=14 CARROSSERIE SUBGROUPE=PORTES LATERALE ARRI

N.FIG PLATE N.FIG	N.PIEZA PARTNUMBER N.PIECE	CAN QTY OUT	DENOMINACION	DESCRIPTION	DENOMINATION	OBSERVACIONES
1	MWC2502K2	1	CONJ.PUERTA L/D	DOOR ASSY RH	ENS PORTE CD	
	MWC2503K2	1	CONJ.PUERTA L/I	DOOR ASSY LH	ENS PORTE CG	
2	MWC2346K2	1	PUERTA L/D	DOOR RH	PORTE CD	
	MWC2347K2	1	PUERTA L/I	DOOR LH	PORTE CG	
3	MUC9324	1	PANEL EXTERIOR LD	OUTDOOR PANEL RH	PANNEAU EXTERIEUR CD	
	MUC9325	1	PANEL EXTERIOR LI	OUTDOOR PANEL LH	PANNEAU EXTERIEUR CG	
4	MWC1602	1	PANEL INTERIOR LD	INDOOR PANEL RH	PANNEAU INTERIEUR CD	
	MWC1603	1	PANEL INTERIOR LI	INDOOR PANEL LH	PANNEAU INTERIEUR CG	
5	SH106101	18	TORNILLO	BOLT	BOULON	
6	WA106041	18	ARANDELA PLANA	PLAIN WASHER	RONDELLE PLANE	
7	WL106001	8	ARANDELA MUELLE	SPRING WASHER	RONDELLE RESSORT	
8	Y003199PMA	2	MANIVELA	CRANK	MANIVELLE	
9	Y003200PMA	2	TAPON	PLUG	BOUCHON	
10	ADU5727	2	TORNILLO	SCREW	VIS	
11	JBC9023	2	SEPARADOR	SPACER	ENTRETOISE	
12	MTC7828	2	CRISTAL	GLASS	CRISTAL	
13	MTC8460	2	CRISTAL	GLASS	CRISTAL	
14	MUC1714F1	2	PERFIL GOMA	RUBBER ANGLE	PROFIL CAOUTCHOUC	
15	MTC8478	2	SOPORTE CRISTAL	GLASS SUPPORT	SUPPORT CRISTAL	
16	MUC1604	1	GOMA ESCURREA EXT LD	WAIST SEAL OUTER RH	CAOUTCHOUC EGO EX CD	
	MUC1605	1	GOMA ESCURREA INT LI	WAIST SEAL OUTER LH	CAOTCHOUC EGO EX CG	
17	MWC1900	2	GOMA ESCURREAGUAS	WAIST SEAL INVER	CAOUTCHOUC EGO IN	
18	201643	4	PIEZA RELLENO	BACK PACKING STRAP	BANDE GARNISSAGE	
19	201235	4	ESQUINA RELLENO	REAR CORNER FILLER	PROFIL DE COIN	
20	204163	2	PIEZA RELLENO	BACK PACKING STRAP	BANDE GARNISSAGE	
21	MUC3285	1	SUPLEMENTO	SHIM	SUPPLEMENT	
	MUC4073	1	SUPLEMENTO	SHIM	SUPPLEMENT	
22	MUC3492	1	PERFIL DIVISOR LD	DIVISION CHANNEL RH	PROFIL DIVISEUR CD	
	MUC3493	1	PERFIL DIVISOR LI	DIVISION CHANNEL LH	PROFIL DIVISEUR CG	
23	MTC8791	2	PERFIL	LOWER CHANNEL	PROFIL INFERIEUR	
24	MTC8790	2	PERFIL SUPERIEUR	TUR CHANNEL	PROFIL SUPERIEUR	
25	MTC8472	2	GUIA TRASERA	REAR GUIDE	GUIDE ARRIERE	
26	MUC4072	2	GUIA DELANTERA	FRONT GUIDE	GUIDE AVANT	
27	MTC8471	2	PERFIL SUPERIOR	TUR CHANNEL	PROFIL SUPERIEUR	
28	070838	12	REMACHE	RIVET	RIVET	
29	AC606031	2	TORNILLO	BOLT	BOULON	
30	MWC1627	2	SOPORTE	SUPPORT	SUPPORT	
31	MWC4412	1	PANEL DESAGUE L/D	DRAIN PANEL RH	PANNEAU D'ECOULEMENT	
	MWC4413	1	PANEL DESAGUE L/I	DRAIN PANEL LH	PANNEAU D'ECOULEMENT	
32	075805	4	REMACHE	RIVET	RIVET	
33	SH104101	4	TORNILLO	BOLT	BOULON	
34	3816	4	ARANDELA PLANA	PLAIN WASHER	RONDELLE PLANE	
35	NH104041	2	TUERCA	NUT	ECROU	
36	WE104001	2	ARANDELA ESTRELLA	STAR WASHER	RONDELLE D'ETOILE	

141018

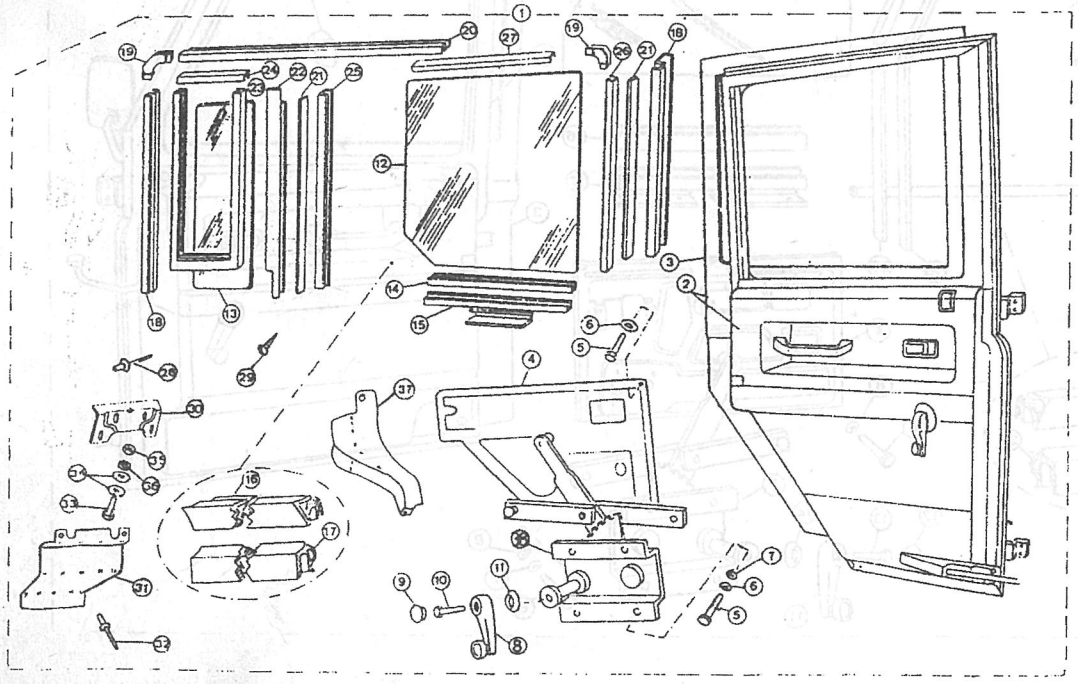

PUBLICACION N:790776 GRUPO=14 CARROCERIA SUBGRUPO=PUERTAS LATERAL TRAS
EDICION N: 1 GROUP=14 BODY SUBGROUP=SIDE REAR DOOR
GROUPE=14 CARROSSERIE SUBGROUPE=PORTES LATERALE ARRI

N.FIG PLATE N.FIG	N.PIEZA PARTNUMBER N.PIECE	CAN QTY OUT	DENOMINACION	DESCRIPTION	DENOMINATION	OBSERVACIONES
37	MXC9586	1	PANEL DESAGUE L/D	DRAIN PANEL RH	PANNEAU DRAINAGE CD	
	MXC9587	1	PANEL DESAGUE L/I	DRAIN PANEL LH	PANNEAU DRAINAGE CG	
38	MUC3026	1	ELEVALUNAS L/D	WINDOW OPENER RH	ELEVATEUR DE GLAC CD	
	MUC3027	1	ELEVALUNAS L/I	WINDOW OPENER L/I	ELEVATEUR DE GLAC CG	

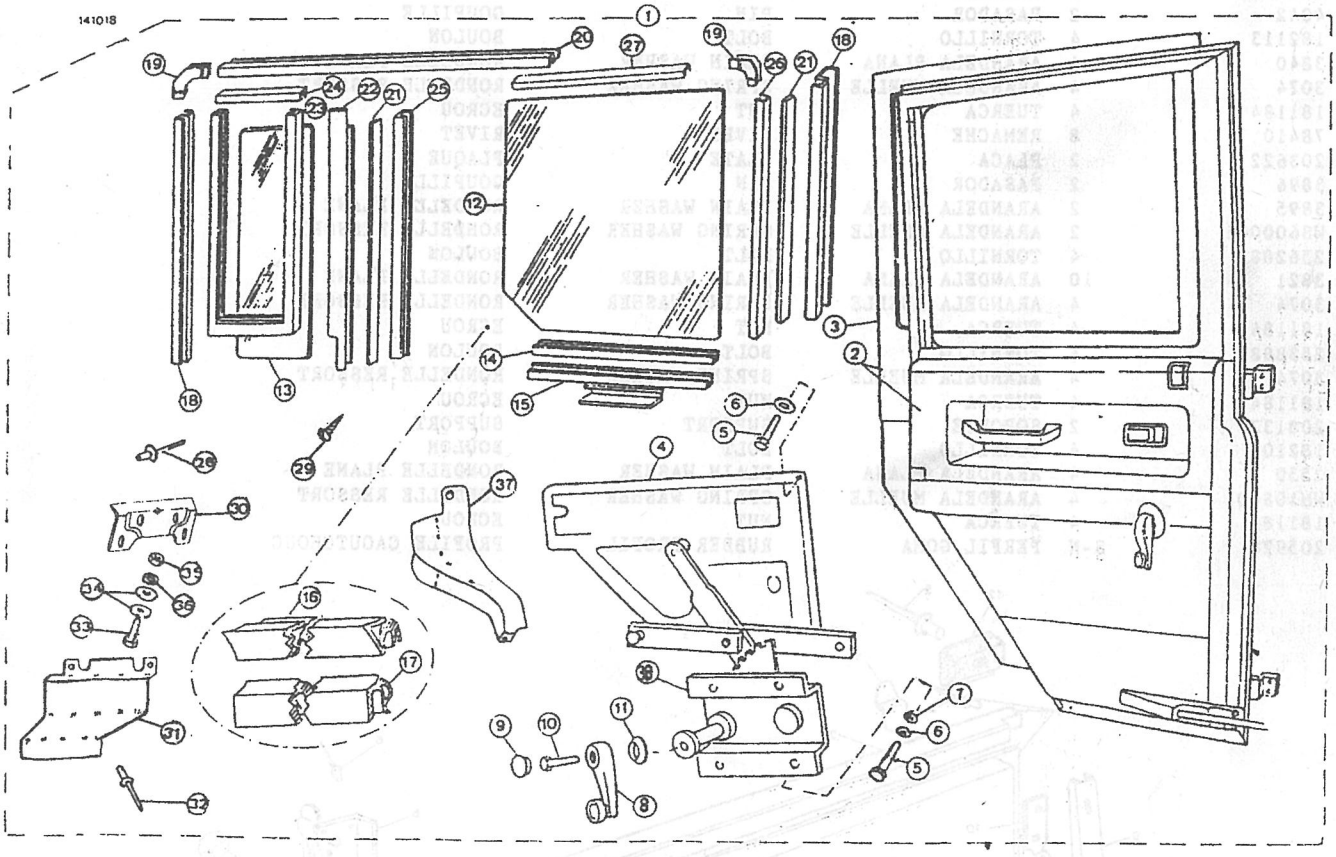

PUBLICACION N:790776 GRUPO=14 CARROCERIA SUBGRUPO=COMPUERTA TRASERA
EDICION N: 1 GROUP=14 BODY SUBGROUP=REAR TAILBOARD
GROUPE=14 CARROSSERIE SUBGROUPE=HAYON ARRIERE

N.FIG PLATE N.FIG	N.PIEZA PARTNUMBER N.PIECE	CAN QTY OUT	DENOMINACION	DESCRIPTION	DENOMINATION	OBSERVACIONES
1	338627	1	COMPUERTA	TAILBOARD	HAYON	
2	345915	1	PANEL	PANEL	PANNEAU	
3	78248	23	REMACHE	RIVET	RIVET	
4	301328	3	GANCHO	HOOK	CROCHET	
5	330233	1	CONJ CERROJO L D	LATCH ASSY R H	ENS VERROU C D	
	330234	1	CONJ CERROJO L I	LATCH ASSY L H	ENS VERROU C G	
6	78248	6	REMACHE	RIVET	RIVET	
7	336412	2	PLACA	PLATE	PLAQUE	
8	338617	1	BISAGRA L/I	HINGE LH	CHARNIERE CG	
9	338618	1	BISAGRA L/D	HINGE RH	CHARNIERE CD	
10	332445	1	GANCHO L/D	HOOK RH	CROCHET CD	
11	332446	1	GANCHO L/I	HOOK LH	CROCHET CG	
12	332146	2	GOMA	RUBBER	CAOUTCHOUC	
13	330399	2	CADENA	CHAIN	CHAINE	
14	330422	4	FUNDA	COVER	PROTECTION	
15	302825	2	SOPORTE	SUPPORT	SUPPORT	
16	302828	2	PASADOR	PIN	GOUPILLE	
17	4042	2	PASADOR	PIN	GOUPILLE	
18	182113	4	TORNILLO	BOLT	BOULON	
19	3840	4	ARANDELA PLANA	PLAIN WASHER	RONDELLE PLANE	
20	3074	4	ARANDELA MUELLE	SPRING WASHER	RONDELLE RESSORT	
21	181184	4	TUERCA	NUT	ECROU	
22	78410	8	REMACHE	RIVET	RIVET	
23	203622	2	PLACA	PLATE	PLAQUE	
24	3896	2	PASADOR	PIN	GOUPILLE	
25	3895	2	ARANDELA PLANA	PLAIN WASHER	RONDELLE PLANE	
26	WS600091	2	ARANDELA MUELLE	SPRING WASHER	RONDELLE RESSORT	
27	256208	4	TORNILLO	BOLT	BOULON	
28	3821	10	ARANDELA PLANA	PLAIN WASHER	RONDELLE PLANE	
29	3074	4	ARANDELA MUELLE	SPRING WASHER	RONDELLE RESSORT	
30	181184	4	TUERCA	NUT	ECROU	
31	253888	4	TORNILLO	BOLT	BOULON	
32	3074	4	ARANDELA MUELLE	SPRING WASHER	RONDELLE RESSORT	
33	181184	4	TUERCA	NUT	ECROU	
34	208137	2	SOPORTE	SUPPORT	SUPPORT	
35	182101	4	TORNILLO	BOLT	BOULON	
36	2550	4	ARANDELA PLANA	PLAIN WASHER	RONDELLE PLANE	
37	WM108001	4	ARANDELA MUELLE	SPRING WASHER	RONDELLE RESSORT	
38	181185	4	TUERCA	NUT	ECROU	
39	205928	S-N	PERFIL GOMA	RUBBER PROFIL	PROFILE CAOUTCHOUC	

141308

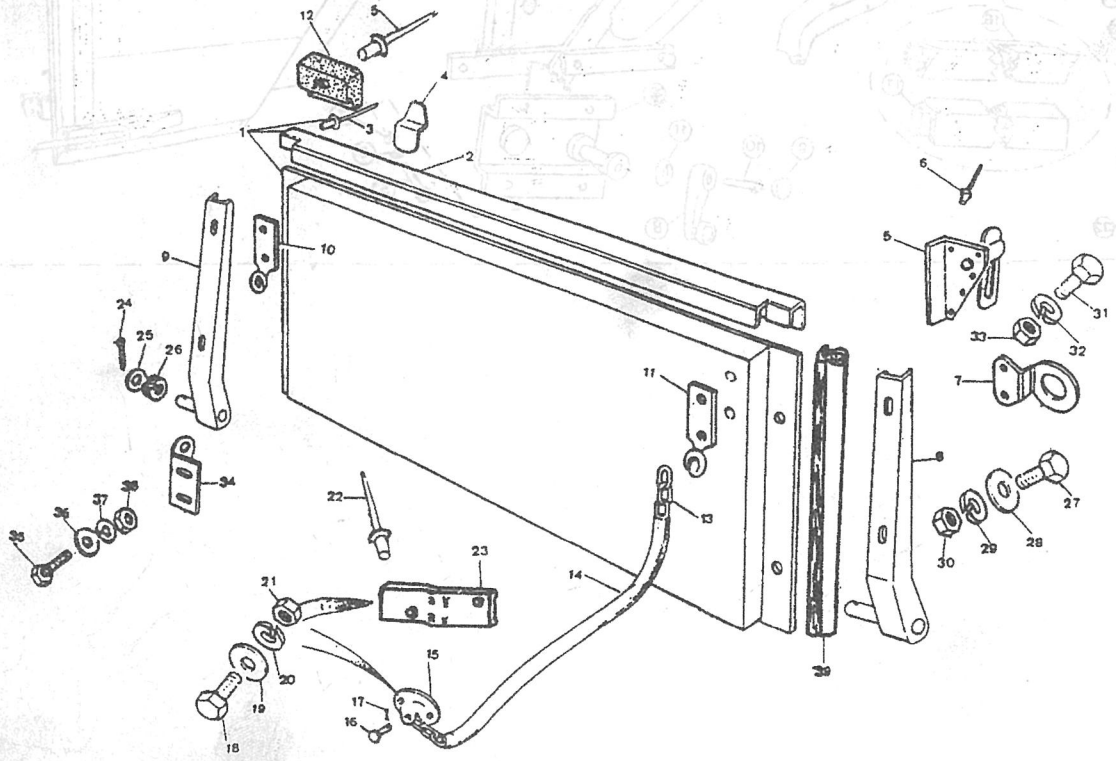

PUBLICACION N:790776 GRUPO=14 CARROCERIA SUBGRUPO=PUERTA TRASERA
EDICION N: 1 GROUP=14 BODY SUBGROUP=REAR DOOR
GROUPE=14 CARROSSERIE SUBGROUPE=PORTE ARRIERE

N.FIG PLATE N.FIG	N.PIEZA PARTNUMBER N.PIECE	CAN QTY OUT	DENOMINACION	DESCRIPTION	DENOMINATION	OBSERVACIONES
1	738254	1	CONJ.PUERTA TRASERA	REAR DOOR ASSY	ENS PORTE ARRIERE	
2	738253	1	PUERTA TRASERA	REAR DOOR	PORTE ARRIERE	
3	730722	1	PANEL PUERTA	DOOR PANEL	PANEL PORTE	
4	730574	1	CRISTAL	GLASS	GLACE	
5	205972	1	GOMA 2280 MM	RUBBER 2280 MM	CAOUTCHOUC 2280 MM	
6	205973	1	GOMA 2280 MM	RUBBER 2280 MM	CAOUTCHOUC 2280 MM	
7	312886	2	TAPON	PLUG	BOUCHON	
8	738249	1	CERRADURA	LOCK	SERRURE	
9	208434	2	PLACA CON ESPARRAGOS	SCREWRETAINER-LOCK	PLATE AVEC GOUJONS	
10	054781	4	ARANDELA	WASHER	RONDELLE	
11	181184	4	TUERCA	NUT	ECROU	
12	332942	1	CIERRE MACHO	MALE DOVETAIL	QUEVE D'ARONDE	
13	332147	1	CIERRE HEMBRA	FEMALE DOVETAIL	QUEVE D'ARONDE	
14	332943F1	1	DISTANCIADOR	SPACER	ENTRETOISE	
15	305232	S-N	SUPLEMENTO	SHIM	SUPPLEMENT	
16	201940	1	EMBELLECEDOR	SEAL-DOOR LOCK	ENJOLIVEUR DE SERRUR	
17	181184	2	TUERCA	NUT	ECROU	
18	3074	2	ARANDELA MUELLE	SPRING WASHER	RONDELLE RESSORT	
19	78389	2	TORNILLO	BOLT	BOULON	
20	78233	2	TORNILLO	BOLT	BOULON	
21	3900	2	ARANDELA PLANA	PLAIN WASHER	RONDELLE PLANE	
22	3074	2	ARANDELA MUELLE	SPRING WASHER	RONDELLE RESSORT	
23	182113	2	TORNILLO	BOLT	BOULON	
24	738264	1	CERRADERO	STRIKER	GACHE DE SERRURE	
25	182120	2	TORNILLO	BOLT	BOULON	
26	3830	2	ARANDELA PLANA	PLAIN WASHER	RONDELLE PLANE	
27	054760	2	ARANDELA	WASHER	RONDELLE	
28	737010	1	PLACA CON TUERCAS	NUT RETAINER-LOCK	PLATE AVEC ECROU	
29	204800	S-N	SUPLEMENTO	SHIM	SUPPLEMENT	
30	SG103084	1	TORNILLO	BOLT	BOULON	
31	MTC2805	1	POMO	KNUB	POMMEAU	

141408

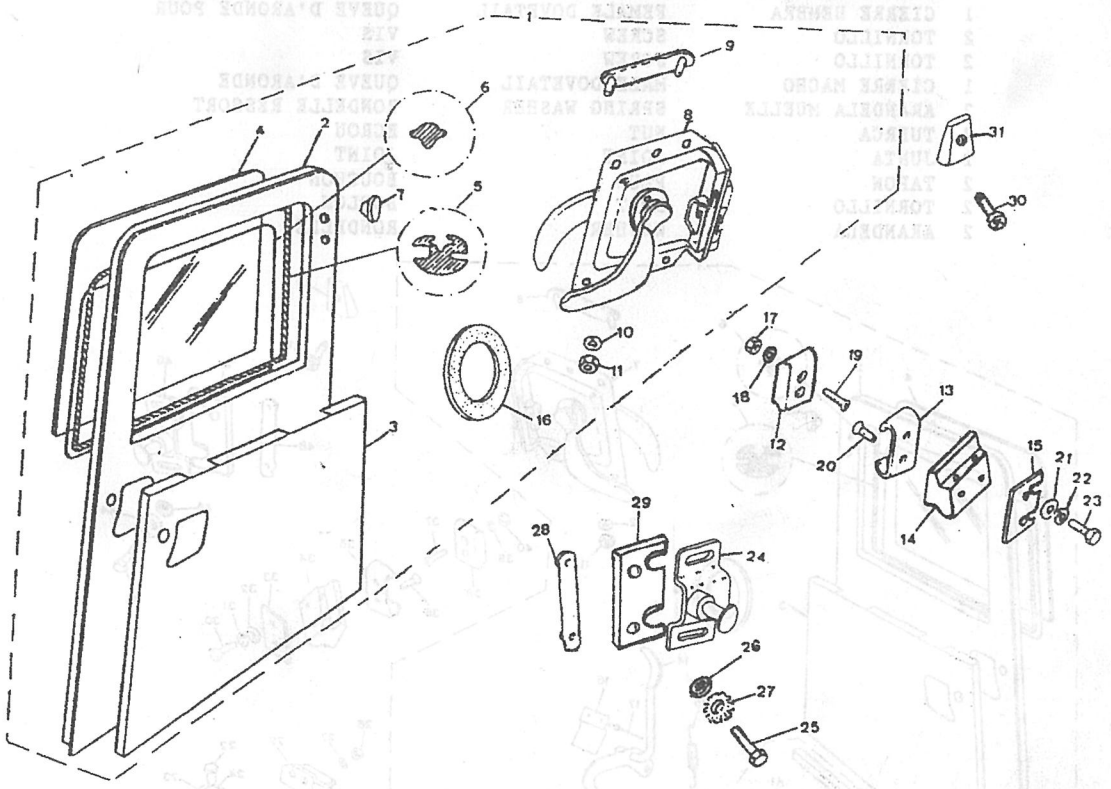

PUBLICACION N:790776 GRUPO=14 CARROCERIA SUBGRUPO=PUERTA TRASERA
EDICION N: 1 GROUP=14 BODY SUBGROUP=REAR DOOR
GROUPE=14 CARROSSERIE SUBGROUPE=PORTE ARRIERE

N.FIG PLATE N.FIG	N.PIEZA PARTNUMBER N.PIECE	CAN QTY OUT	DENOMINACION	DESCRIPTION	DENOMINATION	OBSERVACIONES
1	738251	1	CONJ.PUERTA TRASERA	REAR DOOR ASSY	ENS PORTE ARRIERE	
2	738250	1	PUERTA TRASERA	REAR DOOR	PORTE ARRIERE	
3	730722	1	PANEL PUERTA	DOOR PANEL	PANEL PORTE	
4	205812	1	CRISTAL	GLASS	GLACE	
5	205972	1	GOMA 2280 MM	RUBBER 2280 MM	CAOUTCHOUC 2280 MM	
6	205973	1	GOMA 2280 MM	RUBBER 2280 MM	CAOUTCHOUC 2280 MM	
7	738249	1	CERRADURA	LOCK	SERRURE	
8	208434	2	PLACA CON ESPARRAGOS	SCREW RETAINER-LOCK	PLATE AVEC GOUJONS	
9	201940	1	EMBELLECEDOR	SEAL DOOR LOCK	ENJOLIVEUR DE SERRUR	
10	MUC4471	1	TIRANTE PUERTA	CHECK STRAP LINK	TIRANT DE PORTE	
11	181184	4	TUERCA	NUT	ECROU	
12	054781	4	ARANDELA	WASHER	RONDELLE	
13	MTC2805	1	POMO	KNUB	POMMEAU	
14	MUC4474	1	PALANCA SEGURIDAD	RELIASE LEVER	LEVIER DE SECURITE	
15	MUC4481	1	MUELLE	SPRING	RESSORT	
16	MUC4486	1	PLACA RETENEDORA	RETAINER	RETENTION	
17	RA608177	2	REMACHE	RIVET	RIVET	
18	SG103084	1	TORNILLO	BOLT	BOULON	
19	MUC4545	1	GOMA TOPE-CORTA	RUBBER BUFFER-SHORT	GOMA PARA CHO-COURT	
20	MUC4544	1	GOMA TOPE-LARGA	RUBBER BUFFER-LONG	GOMA PARE CHOC-COURT	
21	346878	1	SOPORTE RETENEDOR	RETAINING BRACKET	SUPPORT DE RETENTION	
22	306564	1	BULON	CLEVIS PIN	GOUPILLE	
23	3901	1	PASADOR DE ALETAS	PIN	GOUPILLE	
24	3899	1	ARANDELA PLANA	PLAIN WASHER	RONDELLE PLANE	
25	182113	3	TORNILLO	BOLT	BOULON	
26	4071	3	ARANDELA PLANA	PLAIN WASHER	RONDELLE PLANE	
27	3074	3	ARANDELA MUELLE	SPRING WASHER	RONDELLE RESSORT	
28	181184	3	TUERCA	NUT	ECROU	
29	205913	1	SOPORTE	BRACKET	SUPPORT	
30	182113	2	TORNILLO	BOLT	BOULON	
31	3900	2	ARANDELA PLANA	PLAIN WASHER	RONDELLE PLANE	
32	3074	2	ARANDELA MUELLE	SPRING WASHER	RONDELLE RESSORT	
33	305232	S-N	PLACA	PLATE	PLAQUE	
34	332943F1	1	DISTANCIADOR	SPACER	ENTRETOISE	
35	332147	1	CIERRE HEMBRA	FEMALE DOVETAIL	QUEVE D'ARONDE POUR	
36	78233	2	TORNILLO	SCREW	VIS	
37	78389	2	TORNILLO	SCREW	VIS	
38	332942	1	CIERRE MACHO	MALE DOVETAIL	QUEVE D'ARONDE	
39	3074	2	ARANDELA MUELLE	SPRING WASHER	RONDELLE RESSORT	
40	181184	2	TUERCA	NUT	ECROU	
41	204750	1	JUNTA	JOINT	JOINT	
42	312886	2	TAPON	PLUG	BOUCHON	
43	182120	2	TORNILLO	BOLT	BOULON	
44	054760	2	ARANDELA	WASHER	RONDELLE	

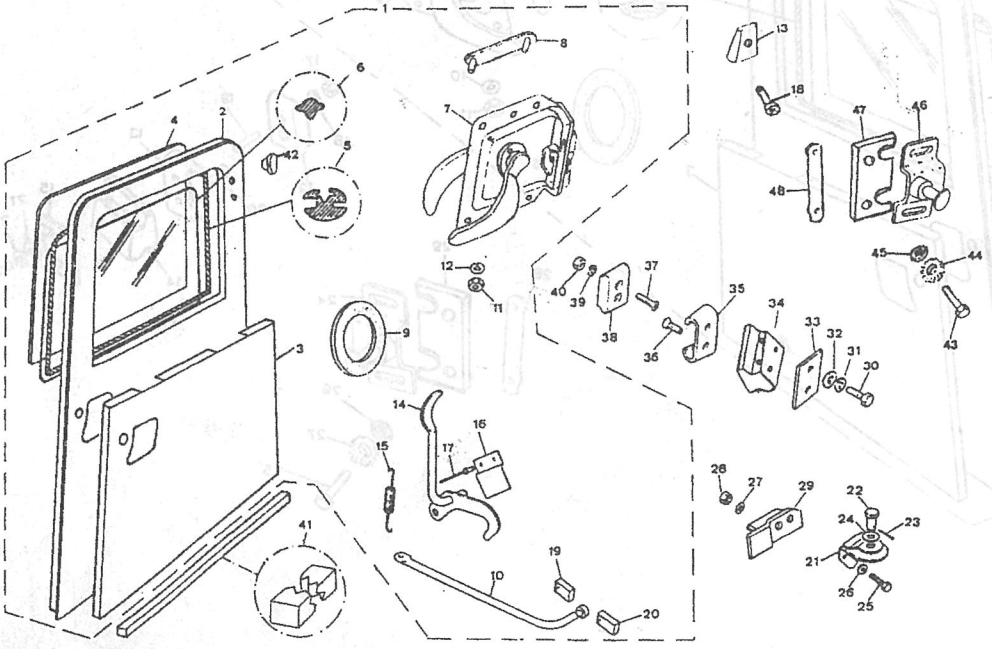

PUBLICACION N:790776 GRUPO=14 CARROCERIA SUBGRUPO=PUERTA TRASERA
EDICION N: 1 GROUP=14 BODY SUBGROUP=REAR DOOR
GROUPE=14 CARROSSERIE SUBGROUPE=PORTE ARRIERE

N.FIG PLATE N.FIG	N.PIEZA PARTNUMBER N.PIECE	CAN QTY OUT	DENOMINACION	DESCRIPTION	DENOMINATION	OBSERVACIONES
45	3830	2	ARANDELA PLANA	PLAIN WASHER	RONDELLE PLANE	
46	738264	1	CERRADERO	STRIKER	GACHE DE SERRURE	
47	204800	S-N	SUPLEMENTO	SHIM	SUPPLEMENT	
48	737010	1	PLACA CON TUERCAS	NUT RETAINER-LOCK	PLATE AVEC ECROU	

141409

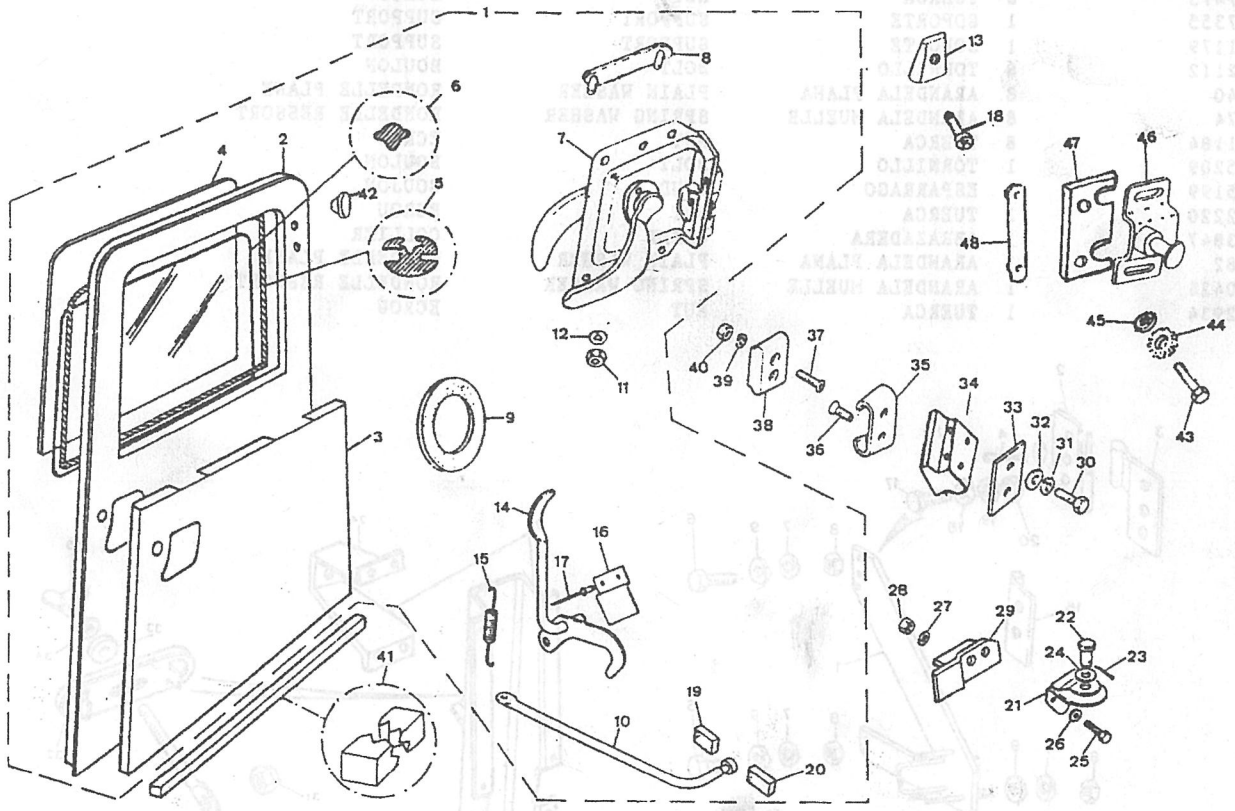

PUBLICACION N:790776 GRUPO=14 CARROCERIA SUBGRUPO=SOPORTE RUEDA
EDICION N: 1 GROUP=14 BODY SUBGROUP=WHEEL SUPPORT
GROUPE=14 CARROSSERIE SUBGROUPE=SUPPORT ROUE

N.FIG PLATE N.FIG	N.PIEZA PARTNUMBER N.PIECE	CAN QTY OUT	DENOMINACION	DESCRIPTION	DENOMINATION	OBSERVACIONES
1	737598	1	CONJ SOPORTE RUEDA	WHEEL SUPPORT ASSY	ENS SUPPORT ROVE	
2	205820	1	BISAGRA SUPERIOR	UPPER HINGE	CHARNIERE SUPERIEUR	
3	202995	1	BISAGRA SUPERIOR PUE	DOOR UPPER HINGE	CHARNIERE SUPERIEUR	
4	3707	1	PASADOR	PIN	GOUPILLE	
5	189502	1	ARANDELA PLANA	PLAIN WASHER	RONDELLE PLANE	
6	183231	5	TORNILLO	BOLT	BOULON	
7	WM108001	9	ARANDELA MUELLE	SPRING WASHER	RONDELLE RESSORT	
8	181185	9	TUERCA	NUT	ECROU	
9	3830	9	ARANDELA PLANA	PLAIN WASHER	RONDELLE PLANE	
10	205850	1	SOPORTE INFERIOR	LOWER SUPPORT	SUPPORT INFERIEUR	
11	2205	1	ARANDELA PLANA	PLAIN WASHER	RONDELLE PLANE	
12	182120	4	TORNILLO	BOLT	BOULON	
13	3830	8	ARANDELA PLANA	PLAIN WASHER	RONDELLE PLANE	
14	WM108001	4	ARANDELA MUELLE	SPRING WASHER	RONDELLE RESSORT	
15	181185	4	TUERCA	NUT	ECROU	
16	202994	1	BISAGRA INFERIOR PTA	DOOR LOWER HINGE	CHARNIERE INFERIEUR	
17	182118	3	TORNILLO	BOLT	BOULON	
18	3830	3	ARANDELA PLANA	PLAIN WASHER	RONDELLE PLANE	
19	WM108001	3	ARANDELA MUELLE	SPRING WASHER	RONDELLE RESSORT	
20	181185	3	TUERCA	NUT	ECROU	
21	185217	3	ARANDELA PLANA	PLAIN WASHER	RONDELLE PLANE	
22	577473	6	TUERCA	NUT	ECROU	
23	157355	1	SOPORTE	SUPPORT	SUPPORT	
24	151179	1	SOPORTE	SUPPORT	SUPPORT	
25	182112	8	TORNILLO	BOLT	BOULON	
26	3840	8	ARANDELA PLANA	PLAIN WASHER	RONDELLE PLANE	
27	3074	8	ARANDELA MUELLE	SPRING WASHER	RONDELLE RESSORT	
28	181184	8	TUERCA	NUT	ECROU	
29	255209	1	TORNILLO	BOLT	BOULON	
30	185199	1	ESPARRAGO	STUD	GOUJON	
31	252220	1	TUERCA	NUT	ECROU	
32	303847	1	ABRAZADERA	CLAMP	COLLIER	
33	3982	1	ARANDELA PLANA	PLAIN WASHER	RONDELLE PLANE	
34	180426	1	ARANDELA MUELLE	SPRING WASHER	RONDELLE RESSORT	
35	302934	1	TUERCA	NUT	ECROU	

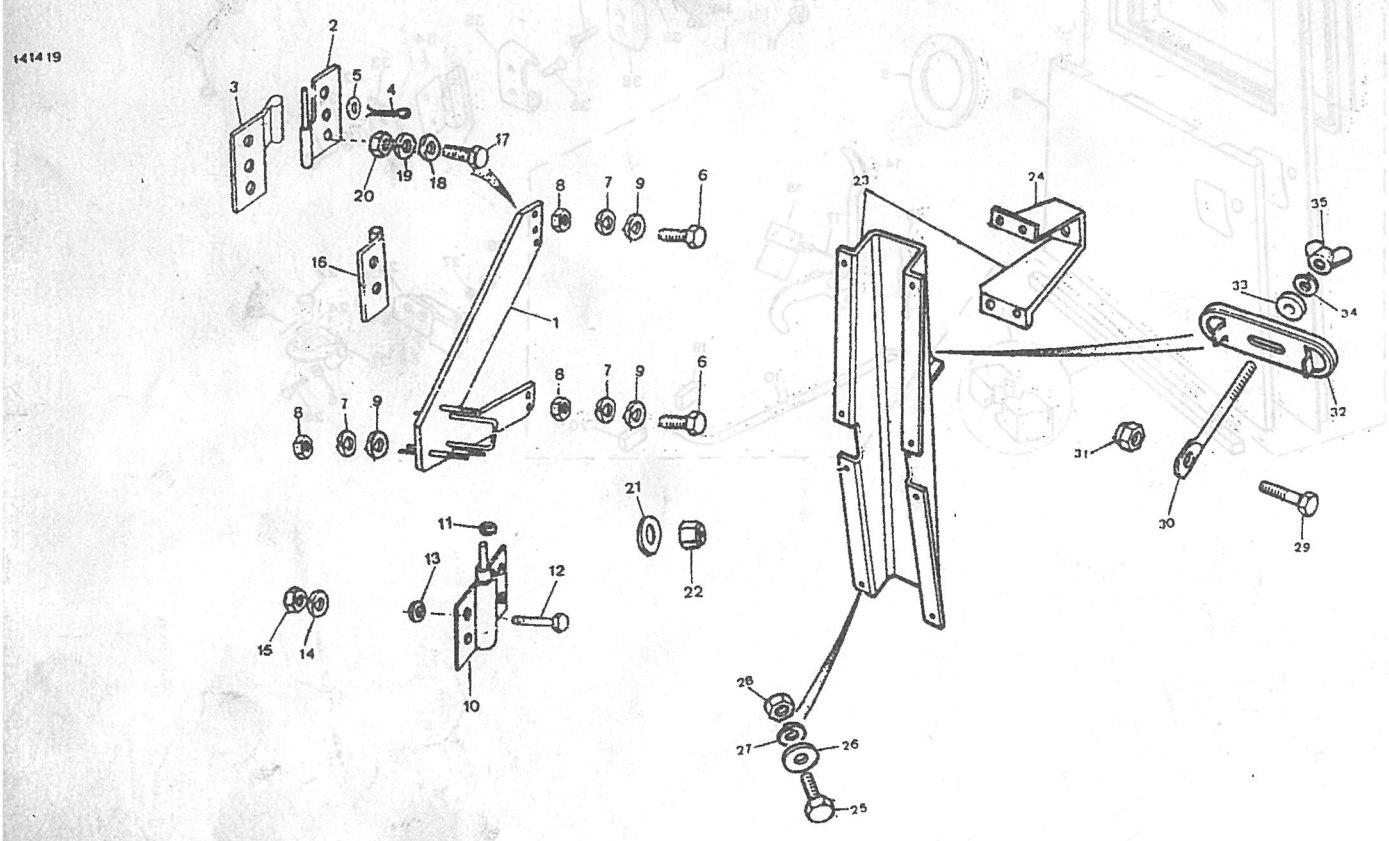

PUBLICACION N:790776
EDICION N: 1

GRUPO=14 CARROCERIA
GROUP=14 BODY
GROUPE=14 CARROSSERIE

SUBGRUPO=DOBLE PUERTA TRASERA
SUBGROUP=REAR DOUBLE DOOR
SUBGROUPE=PORTE DOUBLE ARRIERE

N.FIG PLATE N.FIG	N.PIEZA PARTNUMBER N.PIECE	CAN QTY OUT	DENOMINACION	DESCRIPTION	DENOMINATION	OBSERVACIONES
1	672-V-001	1	CONJ.PUERTA TRAS.L/I	REAR DOOR ASSY LH	ENS PORTE ARRIERE CG	
2	614-V-004	1	CRISTAL	GLASS	GLACE	
3	672-V-002	1	GOMA	RUBBER	CAOUTCHOUC	
4	672-V-009	1	GOMA	RUBBER	CAOUTCHOUC	
5	672-V-003	1	PANEL PUERTA L/I	DOOR PANEL LH	PANNEAU PORTE CG	
6	182112	2	TORNILLO	BOLT	BOULON	
7	3840	4	ARANDELA PLANA	PLAIN WASHER	RONDELLE PLANE	
8	3074	2	ARANDELA MUELLE	SPRING WASHER	RONDELLE RESSORT	
9	181184	2	TUERCA	NUT	ECROU	
10	333140F2	1	PLACA	PLATE	PLAQUE	
11	201664	1	PLACA	PLATE	PLAQUE	
12	672-V-040	1	CONJ.PUERTA TRAS.L/D	REAR DOOR ASSY RH	ENS PORTE ARRIERE CD	
13	672-V-004	1	CRISTAL	GLASS	GLACE	
14	672-V-002	1	GOMA	RUBBER	CAOUTCHOUC	
15	672-V-009	1	GOMA	RUBBER	CAOUTCHOUC	
16	672-V-046	1	PANEL PUERTA L/D	DOOR PANEL RH	PANNEAU PORTE CD	
17	158387	1	CERRADURA	LOCK	SERRURE	
18	192277	S-N	LLAVE EN BRUTO	KEY BLANK	CLEF RUSTIQUE	
19	345498	1	PLACA CON TUERCAS	PLATE WITH NUTS	PLAQUE AVEC ECROU	
20	337806	1	PLACA CON ESPARRAGOS	PLATE WITH STUDS	PLAQUE AVEC GOUJONS	
21	78792	2	TORNILLO	BOLT	BOULON	
22	3074	2	ARANDELA MUELLE	SPRING WASHER	RONDELLE RESSORT	
23	181184	2	TUERCA	NUT	ECROU	
24	3074	2	ARANDELA MUELLE	SPRING WASHER	RONDELLE RESSORT	
25	672-V-032	1	GUIA DE FALLEBA	GUIDE OF ESPAGNOLETT	GUIDE DE ESPAGNOLETT	
26	672-V-018	2	GUIA DE FALLEBA	GUIDE OF ESPAGNOLETT	GUIDE DE ESPAGNOLETT	
27	672-V-016	1	BARRA DE FALLEBA	BAR OF ESPAGNOLETT	BARRE DE ESPAGNOLETT	
28	672-V-013	1	FALLEBA	ESPAGNOLETTE	ESPAGNOLETTE	
29	672-V-017	1	BARRA DE FALLEBA	BAR OF ESPAGNOLETT	BARRE DE ESPAGNOLETT	
30	672-V-029	1	GUIA DE FALLEBA	GUIDE OF ESPAGNOLETT	GUIDE DE ESPAGNOLETT	
31	256241	8	TORNILLO	BOLT	BOULON	
32	4094	8	ARANDELA PLANA	PLAIN WASHER	RONDELLE PLANE	
33	180426	8	ARANDELA MUELLE	SPRING WASHER	RONDELLE RESSORT	
34	182118	12	TORNILLO	BOLT	BOULON	
35	3830	12	ARANDELA PLANA	PLAIN WASHER	RONDELLE PLANE	
36	WM108001	12	ARANDELA MUELLE	SPRING WASHER	RONDELLE RESSORT	
37	181185	12	TUERCA	NUT	ECROU	
38	790896	4	BISAGRA	HINGE	CHARNIERE	
39	790106	2	SUJETADOR PUERTA	DOOR HULDER	SUJETION DE PORTE	

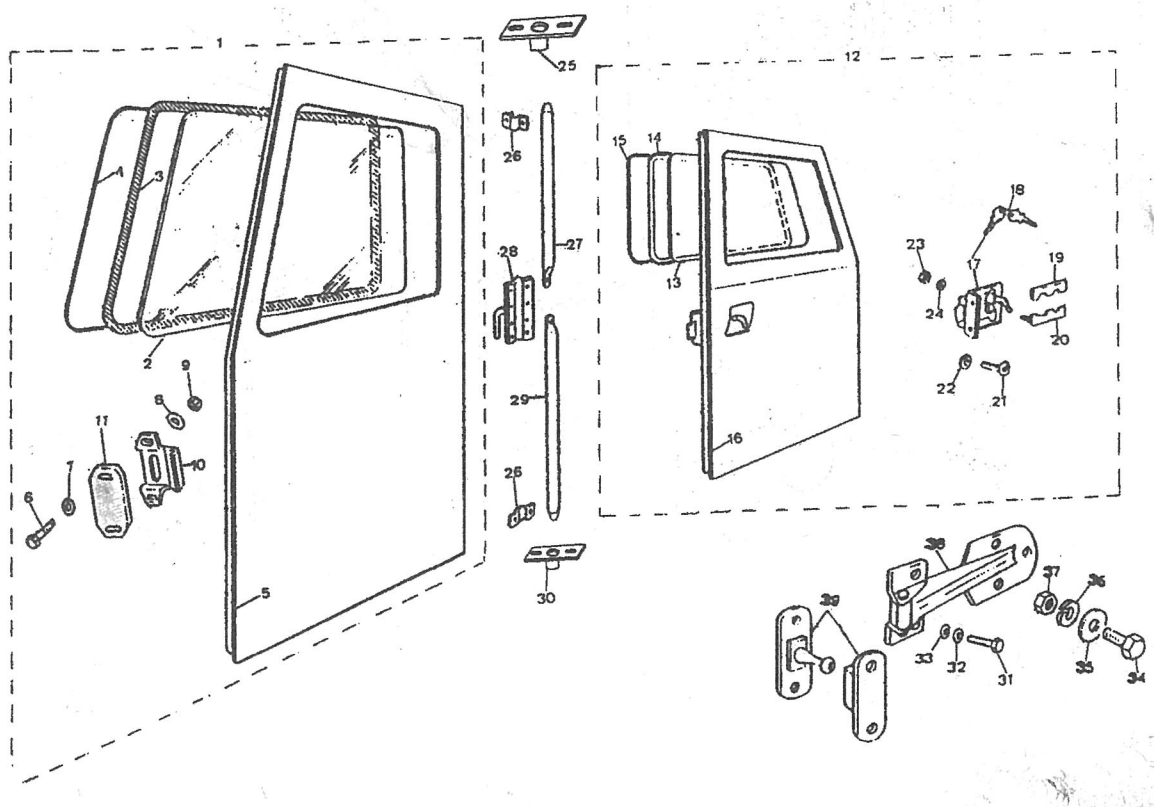

PUBLICACION N:790776 GRUPO=14 CARROCERIA SUBGRUPO=CERRADURAS
EDICION N: 1 GROUP=14 BODY SUBGROUP=LOCKS
GROUPE=14 CARROSSERIE SUBGROUPE=SERRURES

N.FIG PLATE N.FIG	N.PIEZA PARTNUMBER N.PIECE	CAN QTY OUT	DENOMINACION	DESCRIPTION	DENOMINATION	OBSERVACIONES
1	108248	1	JUEGO CERRADURAS	KIT LOCK	JEU SERRURE	2'5 C-2'5 L
	108252	1	JUEGO CERRADURAS	KIT LOCK	JEU SERRURE	2'5 ESPECIAL
2	204236	1	CERRADURA DELANTE LI	FRONT LOCK LH	SERRURE AVANT CG	
	204237	1	CERRADURA DELANTE LD	FRONT LOCK RH	SERRURE AVANT CD	
3	790129	S-N	LLAVE EN BRUTO	KEY BLANK	CLEF RUSTIQUE	
4	204238	1	CERRADURA TRASERA LI	REAR LOCK LH	SERRURE ARRIERE CG	
	204239	1	CERRADURA TRASERA LD	REAR LOCK RH	SERRURE ARRIERE CD	
5	208434	4	PLACA CON TORNILLOS	PLATE WHIT BOLTS	PLAQUE AVEC BOULONS	
6	054781	8	ARANDELA ESTRELLA	STAR WASHER	RONDELLE ETOILE	
7	181184	4	TUERCA	NUT	ECROU	
8	201940	2	EMBELLECEDOR	PARAPHERNALIA	ORNEMENT	
9	737009	2	CERRADERO	STRIKER	GACHE DE SERRURE	
10	204800	S-N	SUPLEMENTO	SHIM	SUPPLEMENT	
11	737010	S-N	PLACA CON TUERCAS	PLATE WHIT NUTS	PLAQUE AVEC ECROUS	
12	182120	4	TORNILLO	BOLT	BOULON	
13	054760	4	ARANDELA ESTRELLA	STAR WASHER	RONDELLE ETOILE	
14	330146	2	SOPORTE CERRADERO	SHROUD-STRIKER	SUPPORT DE GACHE	
15	182112	4	TORNILLO	BOLT	BOULON	
16	3840	4	ARANDELA PLANA	PLAIN WASHER	RONDELLE PLANE	
17	3074	4	ARANDELA MUELLE	SPRING WASHER	RONDELLE RESSORT	
18	181185	4	TUERCA	NUT	ECROU	
19	78248	4	REMACHE	RIVET	RIVET	

141514

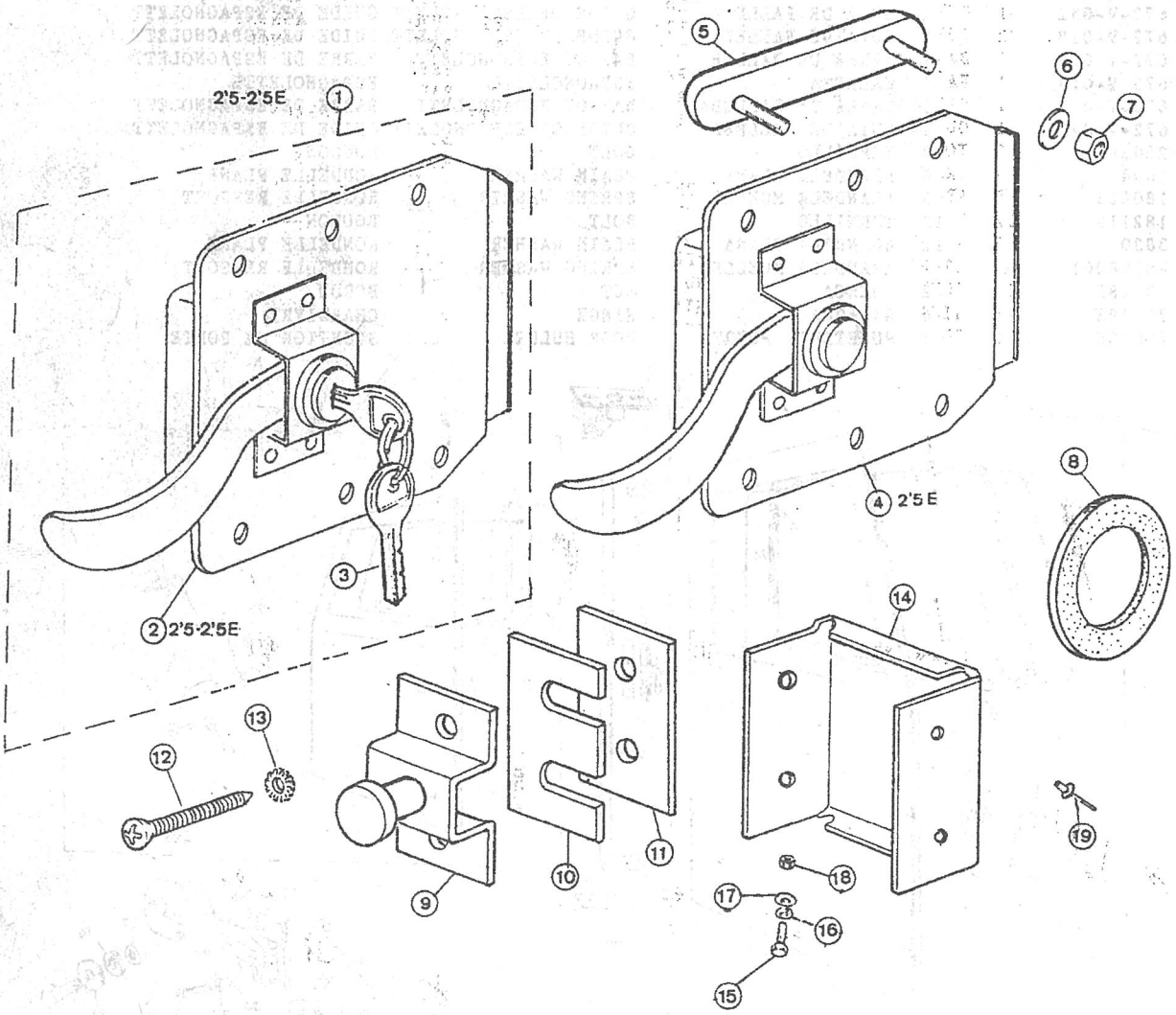

PUBLICACION N:790776 GRUPO=14 CARROCERIA SUBGRUPO=CERRADURAS
EDICION N: 1 GROUP=14 BODY SUBGROUP=LOCKS
GROUPE=14 CARROSSERIE SUBGROUPE=SERRURES

N.FIG PLATE N.FIG	N.PIEZA PARTNUMBER N.PIECE	CAN QTY OUT	DENOMINACION	DESCRIPTION	DENOMINATION	OBSERVACIONES
1	MXC2726	1	MANDO APERTURA L/D	HANDLE DOOR OUTER RH	COMMANDE DE OUVRI CD	
	MXC2727	1	MANDO APERTURA L/I	HANDLE DOOR OUTER LH	COMMANDE DE OUVRI CG	
2	790848	1	JUEGO DE BOMBINES	KEY SET	JEU DE PISTON DE SER	
3	790849	S-N	LLAVE EN BRUTO	KEY BLANK	CLEF RUSTIQUE	
4	MXC2728	1	MANDO APERTURA L/D	HANDLE DOOR OUTER RH	COMMANDE DE OUVRI CD	
	MXC2729	1	MANDO APERTURA L/I	HANDLE DOOR OUTER LH	COMMANDE DE OUVRI CG	
5	ABR2254	2	JUNTA	JOINT	JOINT	
6	ABR5848	2	JUNTA	JOINT	JOINT	
7	02112-05126	4	TORNILLO	BOLT	BOULON	
8	DBP5840PMA	1	MANDO APERTURA PV LD	HANDLE DOOR OUTER RH	COMMANDE DE OUVRI CD	
	DBP5841PMA	1	MANDO APERTURA PV LI	HANDLE DOOR OUTER LH	COMMANDE DE OUVRI CG	
9	185254	4	TORNILLO	SCREW	VIS	
10	369077	12	TUERCA PLASTICO	PLASTIC NUT	ECROU DE PLASTIQUE	
11	DBP6532PMA	1	CARCASA INTERIOR LD	DOOR HANDLE-CASE RH	CARCASA INTERIOR CD	
	DBP6533PMA	1	CARCASA INTERIOR LI	DOOR HANDLE-CASE LH	CARCASA INTERIOR CG	
12	185254	2	TORNILLO	SCREW	VIS	
13	MWC1476	1	RESBALON DELANTER LD	LATCH ASSY FRONT RH	RECUL AVANT CD	
	MWC1477	1	RESBALON DELANTER LI	LATCH ASSY FRONT LH	RECUL AVANT CG	
14	MWC1488	1	RESBALON TRASERO LD	LATCH ASSY REAR RH	RECUL ARRIERE CD	
	MWC1489	1	RESBALON TRASERO LI	LATCH ASSY REAR LH	RECUL ARRIERE CG	
15	SF106161	6	TORNILLO	SCREW	VIS	
16	MUC8526	2	CERRADERO	STRIKER-DOOR LATCH	GACHE DE SERRURE	
17	MUC7809	2	DISTANCIADOR	SPACER	ENTRETOISE	
18	MWC3148	S-N	SUPLEMENTO	SHIM	SUPPLEMENT	
19	185270	4	TORNILLO	BOLT	BOULON	
20	MWC1812	1	PLACA CON TUERCAS LD	PLATE WIHT NUTS RH	PLAQUE AVEC ECROV CD	
	MWC1813	1	PLACA CON TUERCAS LI	PLATE WHIT NUTS LH	PLAQUE AVEC ECROU CG	
21	08323-31066	6	ARANDELA	WASHER	RONDELLE	
22	JRC1775	2	PULSADOR SEGURO PUER	SILL LOCK CONTROL BU	POUSSOIR FERME SERRU	
23	MXC4738	2	CARCASA PULSADOR SEG	CONTROL ESCUTCHEON	CARCASA POUSSOIR FER	
24	AB606041	2	TORNILLO	SCREW	VIS	
25	BRC8965	2	ALOJAMIENTO CARCASA	LOCK CONTROL HOUSING	CARTER DE CARCASA PO	
26	3816	4	ARANDELA	WASHER	RONDELLE	
27	3840	S-N	ARANDELA	WASHER	RONDELLE	
28	WA104001	4	ARANDELA	WASHER	RONDELLE	

141515

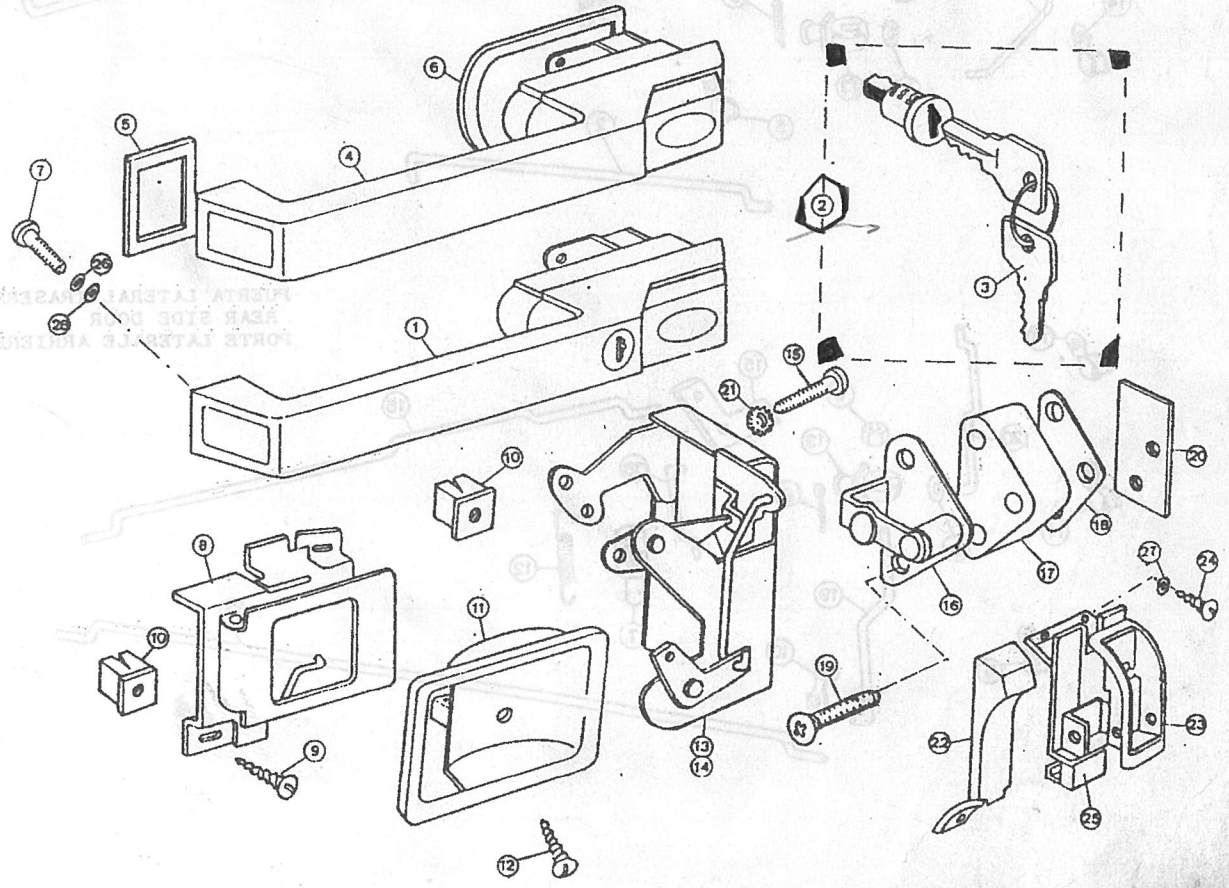

PUBLICACION N:790776 GRUPO=14 CARROCERIA SUBGRUPO=TIRANTES DE CERRADUR
EDICION N: 1 GROUP=14 BODY SUBGROUP=LOCK TIE ROD
GROUPE=14 CARROSSERIE SUBGROUPE=TIRANT DE SERRURE

N.FIG PLATE N.FIG	N.PIEZA PARTNUMBER N.PIECE	CAN QTY OUT	DENOMINACION	DESCRIPTION	DENOMINATION	OBSERVACIONES
1	MWC1486	1	TIRANTE LD	LINK ROD RH	TIRANT CD	
	MWC1487	1	TIRANTE LI	LINK ROD LH	TIRANT CG	
2	MWC1484	2	TIRANTE	LINK ROD	TIRANT	
3	MWC4846	2	TIRANTE	LINK ROD	TIRANT	
4	MWC1480	1	TIRANTE LD	LINK ROD RH	TIRANT CD	
	MWC1481	1	TIRANTE LI	LINK ROD LH	TIRANT CG	
5	BFP1265	2	CLIP	CLIP	CLIP	
6	NH104041	4	TUERCA	NUT	ECROU	
7	MWC4850	2	PASADOR	PIN	GOUPILLE	
8	2388	2	PASADOR	PIN	GOUPILLE	
9	MRC5525	2	ARANDELA PLANA	PLAIN WASHER	RONDELLE PLANE	
10	634604	2	CLIP	CLIP	CLIP	
11	BHA4705	2	CLIP	CLIP	CLIP	
12	MUC4481	2	MUELLE	SPRING	RESSORT	
13	79124	2	CLIP PLASTICO	LINK CLIP	CLIP PLASTIQUE	
14	204160	2	CLIP PLASTICO	LINK CLIP	CLIP PLASTIQUE	
15	DZA1435	4	PALANCA	LEVER	LEVIER	
16	MUC8365	2	TIRANTE	LINK ROD	TIRANT	
17	MWC1492	1	TIRANTE L/D	LINK ROD RH	TIRANT CD	
	MWC1493	1	TIRANTE L/I	LINK ROD LH	TIRANT CG	
18	MUC8364	2	TIRANTE	LINK ROD	TIRANT	
19	MWC5001	1	TIRANTE L/I	LINK ROD LH	TIRANT CG	
	MWC5002	1	TIRANTE L/D	LINK ROD RH	TIRANT CD	
20	MWC1485	2	TIRANTE	LINK ROD	TIRANT	

141516

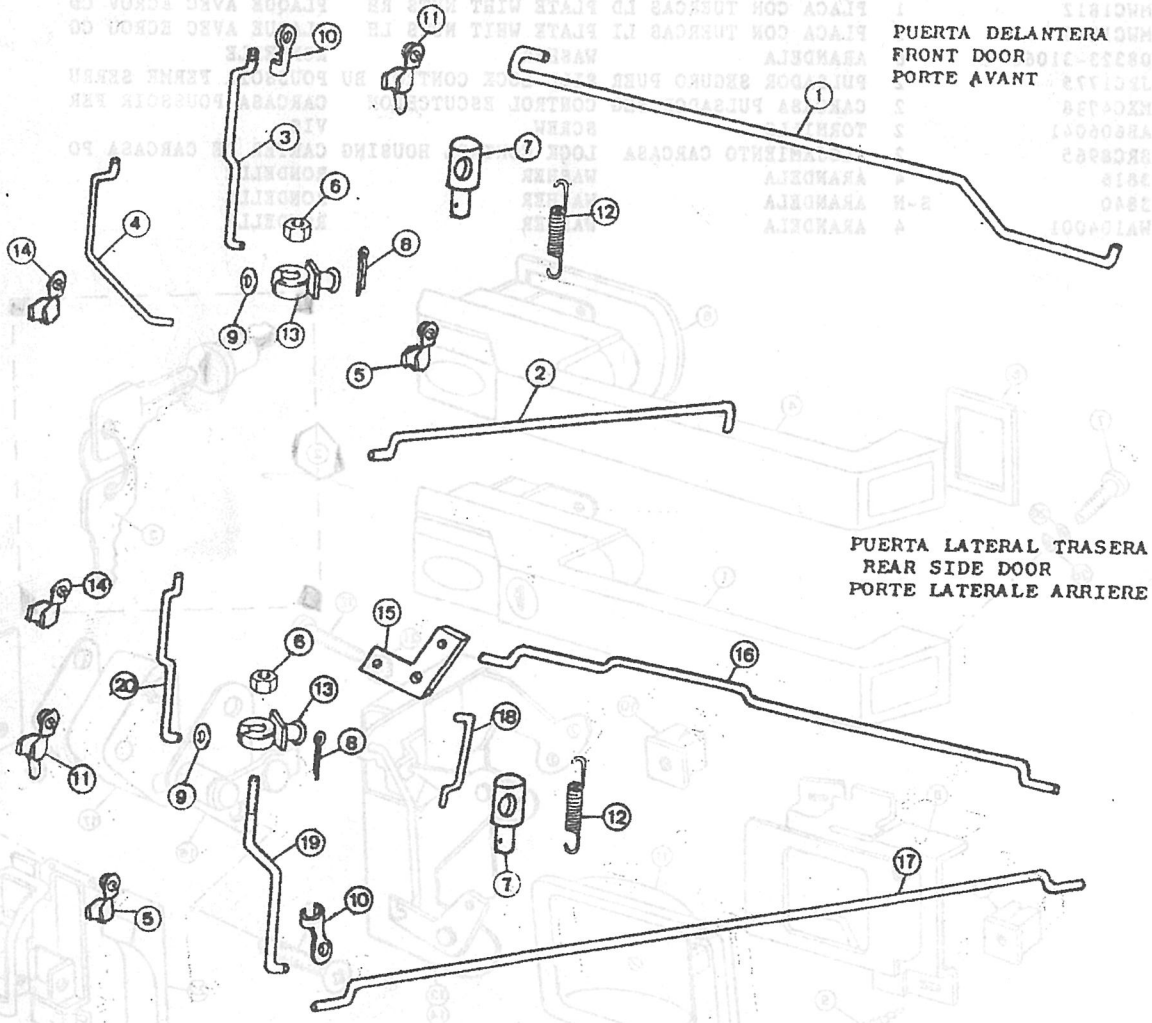

PUBLICACION N:790776 GRUPO=14 CARROCERIA SUBGRUPO=BISAGRAS Y TIRANTES
EDICION N: 1 GROUP=14 BODY SUBGROUP=HINGE AND TIE RODS
GROUPE=14 CARROSSERIE SUBGROUPE=CHARNIERE ET TIRANTS

N.FIG PLATE N.FIG	N.PIEZA PARTNUMBER N.PIECE	CAN QTY OUT	DENOMINACION	DESCRIPTION	DENOMINATION	OBSERVACIONES
1	206843	2	BISAGRA LD	HINGE RH	CHARNIERE CD	
	206844	2	BISAGRA LI	HINGLE LH	CHARNIERE CG	
2	206843	4	BISAGRA LD	HINGE RH	CHARNIERE CD	
	206844	4	BISAGRA LI	HINGE LH	CHARNIERE CG	
3	183225	8	TORNILLO	BOLT	BOULON	
4	183225	16	TORNILLO	BOLT	BOULON	
5	183283	6	TORNILLO	BOLT	BOULON	
	185267	2	TORNILLO	BOLT	BOULON	
6	183283	4	TORNILLO	BOLT	BOULON	
	185267	4	TORNILLO	BOLT	BOULON	
7	200938	S-N	SUPLEMENTO	SHIM	SUPPLEMENT	
8	346319	S-N	TUERCA MUELLE	SPRING NUT	ECROU RESSORT	
9	WM108001	S-N	ARANDELA MUELLE	SPRING WASHER	RONDELLE RESSORT	
10	181185	8	TUERCA	NUT	ECROU	
11	330052	2	PLACA TUERCAS	PLATE WHIT NUT	PLAQUE AVEC ECROUS	
12	182116	4	TORNILLO	BOLT	BOULON	
13	WM108001	4	ARANDELA MUELLE	SPRING WASHER	RONDELLE RESSORT	
14	737360	2	TIRANTE PUERTA DELAN	FRONT DOOR STAY	ENTRETOISE PORTE AVA	
15	182113	2	TORNILLO	BOLT	BOULON	
16	3840	2	ARANDELA PLANA	PLAIN WASHER	RONDELLE PLANE	
17	3074	2	ARANDELA MUELLE	SPRING WASHER	RONDELLE RESSORT	
18	207854	1	PLACA TUERCAS	PLATE WIHT NUTS	PLAQUE AVEC ECROU	
19	737360	1	TIRANTE PUERTA TRAS.	REAR DOOR STAY	ENTRETOISE PORTE ARR	
20	737361	1	PLACA CINTURON L/I	HARNESS PLATE LH	PLAQUE POUR CEINT CG	
	737362	1	PLACA CINTURON L/D	HARNESS PLATE RH	PLAQUE POUR CEINT CD	
21	182120	4	TORNILLO	BOLT	BOULON	
22	3830	4	ARANDELA PLANA	PLAIN WASHER	RONDELLE PLANE	
23	054760	4	ARANDELA ESTRELLE	STAR WASHER	RONDELLE D'ETOILE	
24	181185	4	TUERCA	NUT	ECROU	
25	182103	4	TORNILLO	BOLT	BOULON	
26	3830	4	ARANDELA PLANA	PLAIN WASHER	RONDELLE PLANE	
27	054760	4	ARANDELA ESTRELLA	STAR WASHER	RONDELLE D'ETOILE	
28	181185	4	TUERCA	NUT	ECROU	
29	737506	2	TIRANTE PTA.LAT.TRA.	REAR SIDE DOOR STAY	ENTRETOISE PORTE LAT	

141706

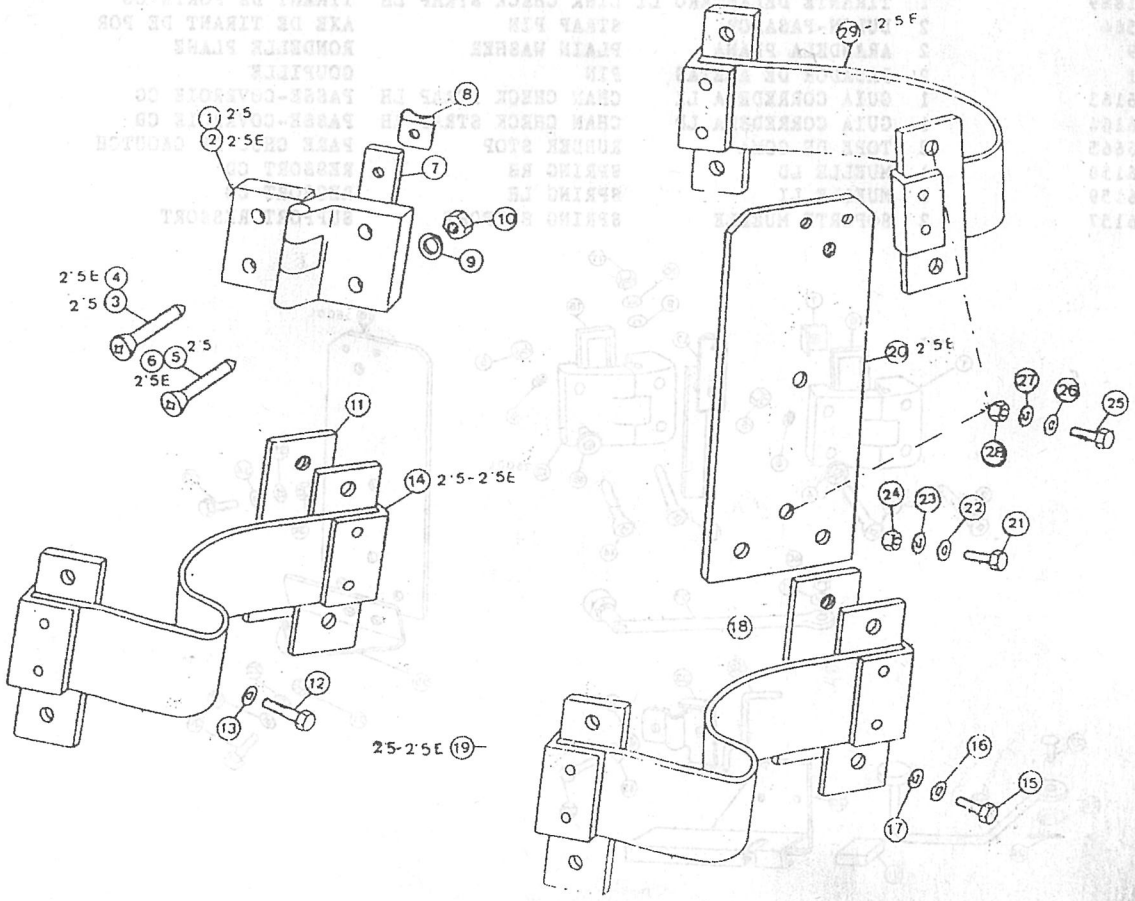

PUBLICACION N:790776 GRUPO-14 CARROCERIA SUBGRUPO-BISAGRAS Y TIRANTES
EDICION N: 1 GROUP-14 BODY SUBGROUP-HINGE AND TIE RODS
GROUPE-14 CARROSSERIE SUBGROUPE-CHARNIERE ET TIRANTS

N.FIG PLATE N.FIG	N.PIEZA PARTNUMBER N.PIECE	CAN QTY OUT	DENOMINACION	DESCRIPTION	DENOMINATION	OBSERVACIONES
1	347362	1	BISAGRA INFERIOR LD	LOWER HINGE RH	CHARNIERE INFERIE CD	
	347363	1	BISAGRA INFERIOR LI	LOWER HINGE LH	CHARNIERE INFERIE LH	
	MRC3037	1	BISAGRA SUPERIOR LD	UPPER HINGE RH	CHARNIERE SUPERIE CD	
	MRC3038	1	BISAGRA SUPERIOR LI	UPPER HINGE LH	CHARNIERE SUPERIE LH	
2	79221	8	TORNILLO	BOLT	BOULON	
3	185267	8	TORNILLO	BOLT	BOULON	
4	MRC1980	8	ARANDELA NYLON	NYLON WASHER	RONDELLE NYLON	
5	181185	16	TUERCA	NUT	ECROU	
6	347369	4	JUNTA	JOINT	JOINT	
7	346319	8	TUERCA"J"	NUT"J"	ECROU"J"	
8	054760	16	ARANDELA ESTRELLA	STAR WASHER	RONDELLE D'ETOILE	
9	WM108001	4	ARANDELA MUELLE	SPRING WASHER	RONDELLE RESSORT	
10	3830	4	ARANDELA PLANA	PLAIN WASHER	RONDELLE PLANE	
11	181185	4	TUERCA	NUT	ECROU	
12	347362	2	BISAGRA TRASERA	REAR HINGE	CHARNIERE ARRIERE	
	347363	2	BISAGRA TRASERA	REAR HINGE	CHARNIERE ARRIERE	
13	185268	4	TORNILLO	BOLT	BOULON	
	185269	4	TORNILLO	BOLT	BOULON	
14	185267	8	TORNILLO	BOLT	BOULON	
15	MRC1980	8	ARANDELA NYLON	NYLON WASHER	RONDELLE NYLON	
16	347369	4	JUNTA	JOINT	JOINT	
17	333710	2	PLACA CON TUERCAS	PLATE WIHT NUTS	PLAQUE AVEC ECROUS	
18	737361	1	PLACA CINTURON LI	HARNESS PLATE LH	PLAQUE POUR CEINT CG	
	737362	1	PLACA CINTURON LD	HARNESS PLATE RH	PLAQUE POUR CEINT CD	
19	3830	4	ARANDELA PLANA	PLAIN WASHER	RONDELLE PLANE	
20	182120	4	TORNILLO	BOLT	BOULON	
21	181185	4	TUERCA	NUT	ECROU	
22	054760	4	ARANDELA ESTRELLA	STAR WASHER	RONDELLE D'ETOILE	
23	182118	2	TORNILLO	BOLT	BOULON	
24	MWC1837	1	TIRANTE DE PUERTA LD	CHECK STRAP RH	TIGE CD	
	MWC1838	1	TIRANTE DE PUERTA LI	CHECK STRAP LH	TIGE CG	
25	MRC4753	1	SOPORTE TIRANTE L/D	CHECK STRAP SUPPO RH	SUPPORT TIGE CD	
	MRC4754	1	SOPORTE TIRANTE L/I	CHECK STRAP SUPPO LH	SUPPORT TIGE CG	
26	MUC1888	1	TIRANTE DELANTERO LD	LINK CHECK STRAP RH	TIRANT DE PORTE CD	
	MUC1889	1	TIRANTE DELANTERO LI	LINK CHECK STRAP LH	TIRANT DE PORTE CG	
27	306564	2	BULON-PASADOR	STRAP PIN	AXE DE TIRANT DE POR	
28	3899	2	ARANDELA PLANA	PLAIN WASHER	RONDELLE PLANE	
29	3901	2	PASADOR DE ALETAS	PIN	GOUPILLE	
30	MUC6163	1	GUIA CORREDERA LI	CHAN CHECK STRAP LH	PASSE-COVRROIE CG	
	MUC6164	1	GUIA CORREDERA LD	CHAN CHECK STRAP RH	PASSE-COVRROIE CD	
31	MUC6665	2	TOPE DE GOMA	RUBBER STOP	PARE CHUC DE CAOUTCH	
32	MUC6158	1	MUELLE LD	SPRING RH	RESSORT CD	
	MUC6159	1	MUELLE LI	SPRING LH	RESSORT CG	
33	MUC6157	2	SOPORTE MUELLE	SPRING SUPPORT	SUPPORT RESSORT	

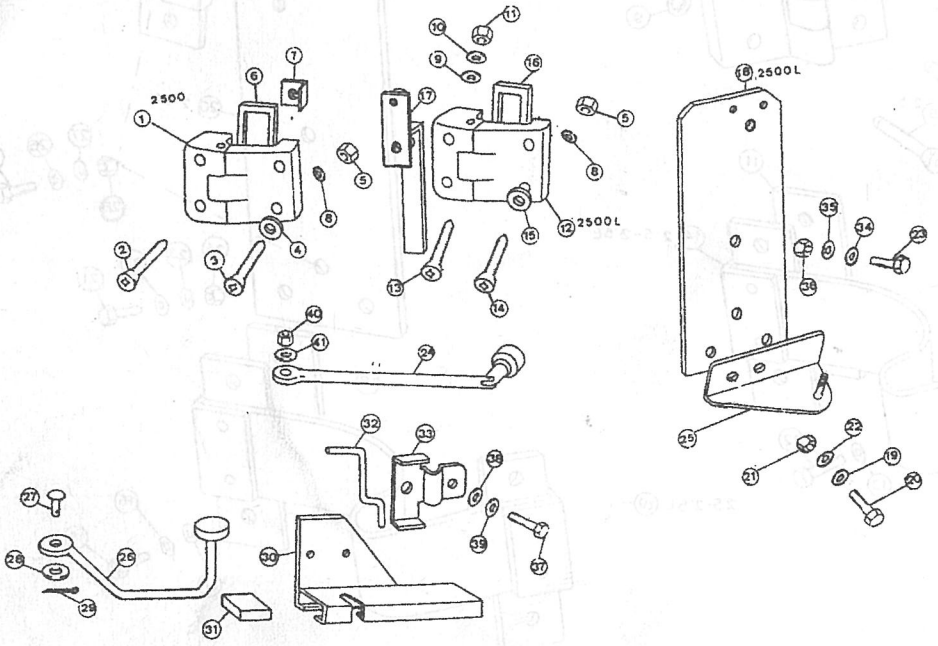

PUBLICACION N:790776 GRUPO=14 CARROCERIA SUBGRUPO=BISAGRAS Y TIRANTES
EDICION N: 1 GROUP=14 BODY SUBGROUP=HINGE AND TIE RODS
GROUPE=14 CARROSSERIE SUBGROUPE=CHARNIERE ET TIRANTS

N.FIG PLATE N.FIG	N.PIEZA PARTNUMBER N.PIECE	CAN QTY OUT	DENOMINACION	DESCRIPTION	DENOMINATION	OBSERVACIONES
34	3830	4	ARANDELA PLANA	PLAIN WASHER	RONDELLE PLANE	
35	054760	2	ARANDELA ESTRELLA	STAR WASHER	RONDELLE D'ETOILE	
36	181185	2	TUERCA	NUT	ECROU	
37	255214	4	TORNILLO	BOLT	BOULON	
38	4071	4	ARANDELA PLANA	PLAIN WASHER	RONDELLE PLANE	
39	3074	4	ARANDELA MUELLE	SPRING WASHER	RONDELLE RESSORT	
40	NY106041	2	TUERCA	NUT	ECROU	
41	3912	4	ARANDELA PLANA	PLAIN WASHER	RONDELLE PLANE	

141709

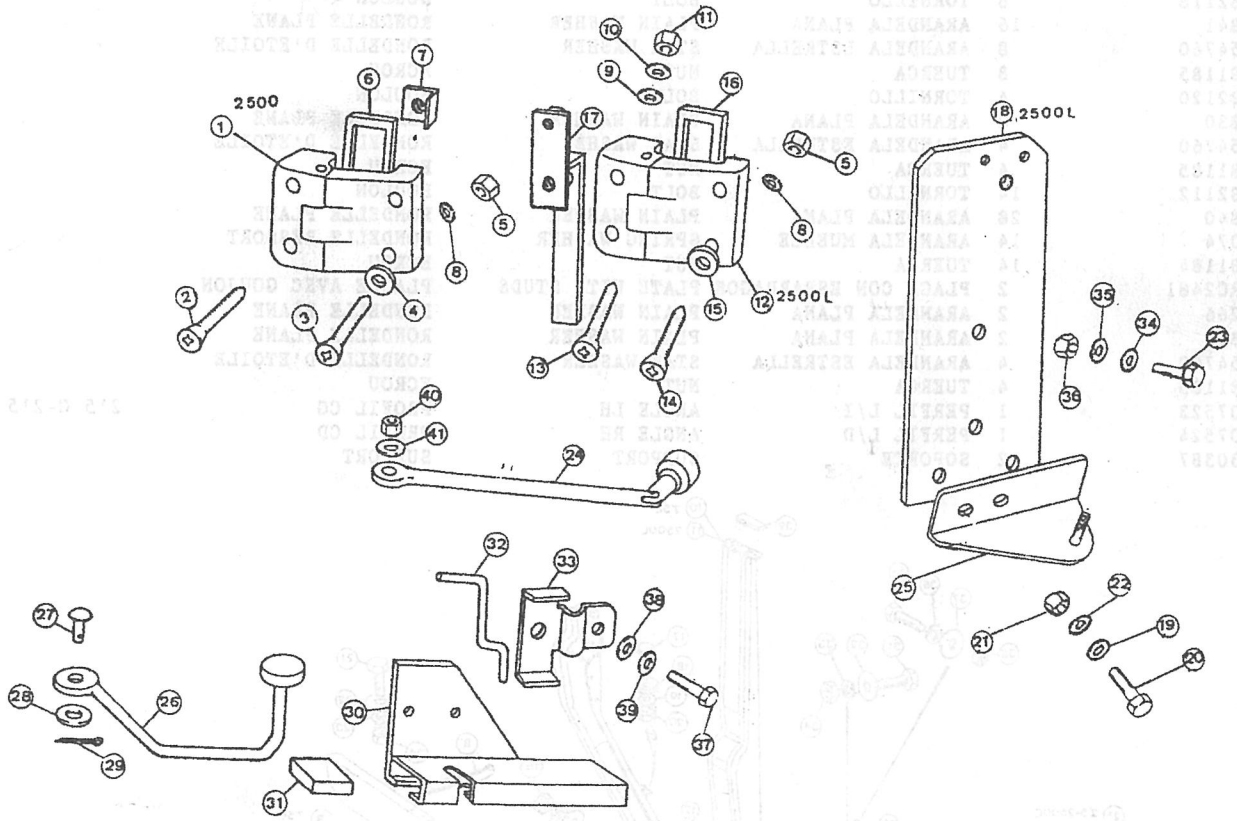

PUBLICACION N:790776 GRUPO=14 CARROCERIA SUBGRUPO=PANELES DE UMBRAL
EDICION N: 1 GROUP=14 BODY SUBGROUP=SILL PANELS
GROUPE=14 CARROSSERIE SUBGROUPE=PANNEAUX LONGERON

N.FIG PLATE N.FIG	N.PIEZA PARTNUMBER N.PIECE	CAN QTY OUT	DENOMINACION	DESCRIPTION	DENOMINATION	OBSERVACIONES
1	737116	1	PANEL DE UMBRAL LD	SILL PANEL RH	PANNEAU LONGERON CD	2'5 C-2'5 L-2'5
	737117	1	PANEL DE UMBRAL LI	SILL PANEL LH	PANNEAU LONGERON CG	
2	MRC4981K1	1	PANEL DE UMBRAL LD	SILL PANEL RH	PANNEAU LONGERON CD	2500 C-2500 L
	MRC4982K1	1	PANEL DE UMBRAL LI	SILL PANEL LH	PANNEAU LONGERON CG	
3	347018	1	PANEL DE UMBRAL LD	SILL PANEL RH	PANNEAU LONGERON CD	2'5 L
	347019	1	PANEL DE UMBRAL LI	SILL PANEL LH	PANNEAU LONGERON CG	
4	337710	1	PANEL DE UMBRAL LD	SILL PANEL RH	PANNEAU LONGERON CD	2'5 E
	337711	1	PANEL DE UMBRAL LI	SILL PANEL LH	PANNEAU LONGERON CG	
5	205858	1	PANEL DE UMBRAL LI	SILL PANEL LH	PANNEAU LONGERON CG	2500 C
	205859	1	PANEL DE UMBRAL LD	SILL PANEL RH	PANNEAU LONGERON CD	
6	737618	1	PANEL DE UMBRAL LI	SILL PANEL LH	PANNEAU LONGERON CG	2500 L
	737619	1	PANEL DE UMBRAL LD	SILL PANEL RH	PANNEAU LONGERON CD	
7	337938	1	PANEL DE UMBRAL L/D	SILL PANEL RH	PANNEAU LONGERON CD	2'5 C
	337939	1	PANEL DE UMBRAL L/I	SILL PANEL LH	PANNEAU LONGERON CG	
8	337771	1	TIRANTE L/D	STAY RH	APPUI CD	2'5 L
	337772	1	TIRANTE L/I	STAY LH	APPUI CG	
9	330303	1	TIRANTE L/D	STAY RH	APPUI CD	2'5 C
	330304	1	TIRANTE L/I	STAY LH	APPUI CG	
10	737346	1	MARCO DE PUERTAS L/D	DOOR FRAME RH	CHAMBRANLE CD	2'5 E
	737347	1	MARCO PUERTAS L/I	DOOR FRAME LH	CHAMBRANLE CG	
11	737625	1	MARCO PUERTAS L/I	DOOR FRAME LH	CHAMBRANLE CG	2500 L
	737626	1	MARCO PUERTAS L/D	DOOR FRAME RH	CHAMBRANLE CD	
12	333259	1	SOPORTE L/D	BRACKET RH	SUPPORT CD	
	333260	1	SOPORTE L/I	BRACKET LH	SUPPORT CG	
13	182118	8	TORNILLO	BOLT	BOULON	
14	3841	16	ARANDELA PLANA	PLAIN WASHER	RONDELLE PLANE	
15	054760	8	ARANDELA ESTRELLA	STAR WASHER	RONDELLE D'ETOILE	
16	181185	8	TUERCA	NUT	ECROU	
17	182120	4	TORNILLO	BOLT	BOULON	
18	3830	8	ARANDELA PLANA	PLAIN WASHER	RONDELLE PLANE	
19	054760	4	ARANDELA ESTRELLA	STAR WASHER	RONDELLE D'ETOILE	
20	181185	4	TUERCA	NUT	ECROU	
21	182112	14	TORNILLO	BOLT	BOULON	
22	3840	28	ARANDELA PLANA	PLAIN WASHER	RONDELLE PLANE	
23	3074	14	ARANDELA MUELLE	SPRING WASHER	RONDELLE RESSORT	
24	181184	14	TUERCA	NUT	ECROU	
25	MRC2481	2	PLACA CON ESPARRAGOS	PLATE WITH STUDS	PLAQUE AVEC GOUJON	
26	2266	2	ARANDELA PLANA	PLAIN WASHER	RONDELLE PLANE	
	3898	2	ARANDELA PLANA	PLAIN WASHER	RONDELLE PLANE	
27	054760	4	ARANDELA ESTRELLA	STAR WASHER	RONDELLE D'ETOILE	
28	181185	4	TUERCA	NUT	ECROU	
29	207523	1	PERFIL L/I	ANGLE LH	PROFIL CG	2'5 C-2'5 L-2500C
	207524	1	PERFIL L/D	ANGLE RH	PROFIL CD	
30	330387	2	SOPORTE	SUPPORT	SUPPORT	

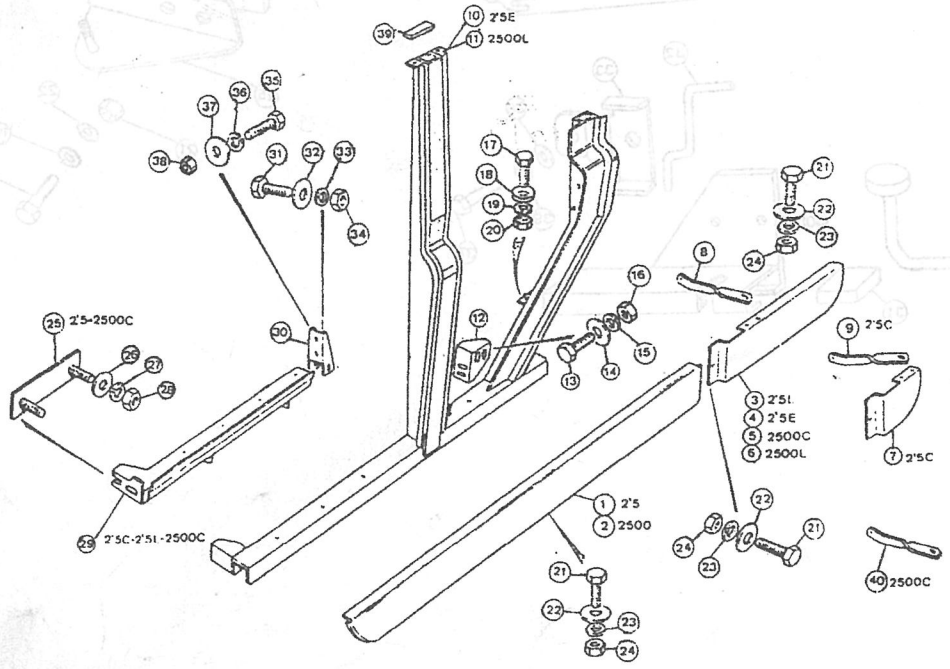

PUBLICACION N:790776 GRUPO=14 CARROCERIA SUBGRUPO=PANELES DE UMBRAL
EDICION N: 1 GROUP=14 BODY SUBGROUP=SILL PANELS
GROUPE=14 CARROSSERIE SUBGROUPE=PANNEAUX LONGERON

N.FIG PLATE N.FIG	N.PIEZA PARTNUMBER N.PIECE	CAN QTY OUT	DENOMINACION	DESCRIPTION	DENOMINATION	OBSERVACIONES
31	182117	4	TORNILLO	BOLT	BOULON	
32	3841	8	ARANDELA PLANA	PLAIN WASHER	RONDELLE PLANE	
33	WM108001	4	ARANDELA MUELLE	SPRING WASHER	RONDELLE RESSORT	
34	181185	4	TUERCA	NUT	ECROU	
35	255209	4	TORNILLO	BOLT	BOULON	
36	3074	4	ARANDELA MUELLE	SPRING WASHER	RONDELLE RESSORT	
37	3821	8	ARANDELA PLANA	PLAIN WASHER	RONDELLE PLANE	
38	181184	4	TUERCA	NUT	ECROU	
39	333257	2	PLACA DE GOMA	PLATE OF RUBBER	PLAQUE DE CAOUTCHOUC	
40	730278	2	TIRANTE	STAY	APPUI	2500 C

141822

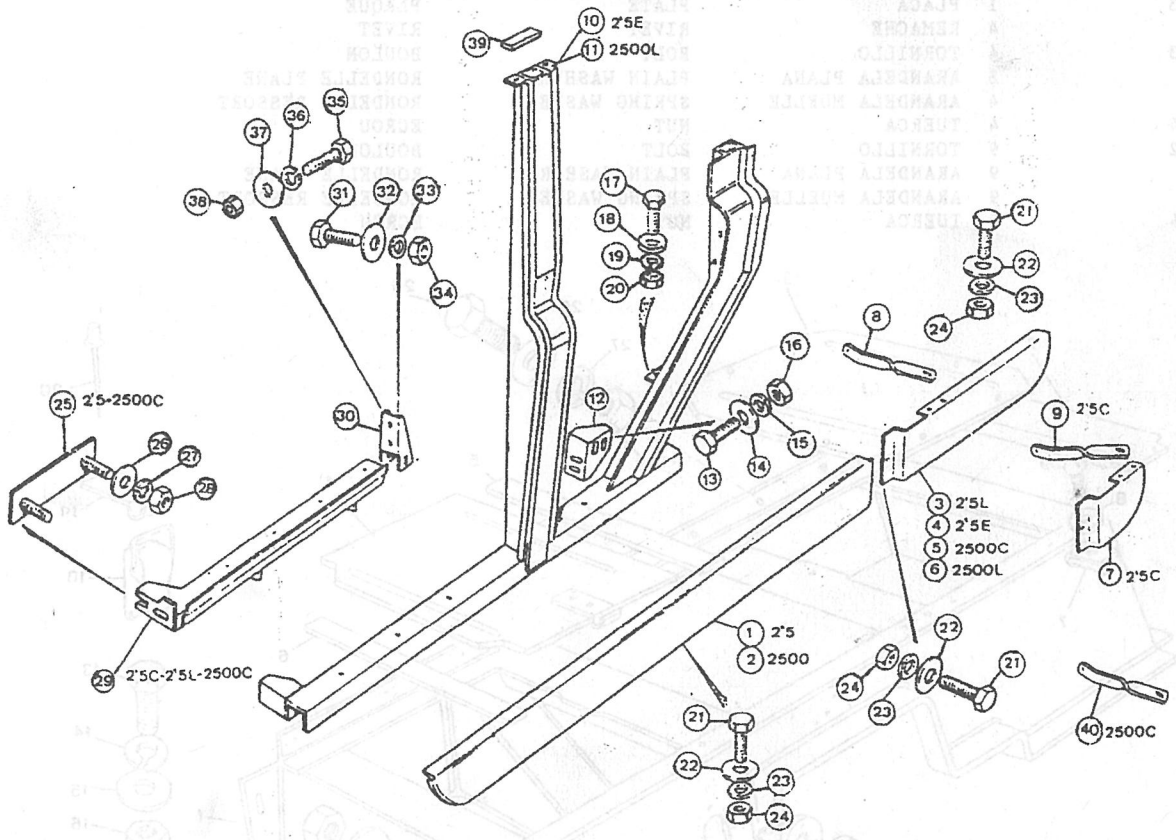

PUBLICACION N:790776 GRUPO=14 CARROCERIA SUBGRUPO=BASE DE ASIENTOS
EDICION N: 1 GROUP=14 BODY SUBGROUP=SEAT BASE
GROUPE=14 CARROSSERIE SUBGROUPE=BASE DE SIEGE

N.FIG PLATE N.FIG	N.PIEZA PARTNUMBER N.PIECE	CAN QTY OUT	DENOMINACION	DESCRIPTION	DENOMINATION	OBSERVACIONES
1	209845	1	BASE DE ASIENTOS	SEAT BASE	BASE DE SIEGE	2'5 C-2'5 L-2'5
	209845-R	1	BASE DE ASIENTOS	SEAT BASE	BASE DE SIEGE	2500 C-2500 L
2	333693K1	1	PLACA LI	PLATE LH	PLAQUE CG	
	334966	1	PLACA LD	PLATE RH	PLAQUE CD	
3	348859	1	PLACA LD	PLATE RH	PLAQUE CD	
4	206413	1	PLACA L/I	PLATE LH	PLAQUE CG	
5	203811	1	TIRA ADHESIVA 5000X1	ADHESIVE ST 5000X16	BANDE ADHESI 5000X16	
6	203815	1	TIRA ADHESIV 5000X8	ADHESIVE STR 5000X8	BANDE ADHESI 5000X8	
7	78237	6	TUERCA	NUT	ECROU	
8	3816	6	ARANDELA	WASHER	RONDELLE	
9	78121	6	TORNILLO	BOLT	BOULON	
10	78137	6	TORNILLO	BOLT	BOULON	
11	330348	1	PLACA	PLATE	PLAQUE	
12	338780	1	GOMA	RUBBER	CAOUTCHOUC	
13	255209	8	TORNILLO	BOLT	BOULON	
14	3074	8	ARANDELA MUELLE	SPRING WASHER	RONDELLE RESSORT	
15	3821	16	ARANDELA PLANA	PLAIN WASHER	RONDELLE PLANE	
16	181184	8	TUERCA	NUT	ECROU	
17	345100	1	SOPORTE L/D	SUPPORT RH	SUPPORT CD	
	345101	1	SOPORTE L/I	SUPPORT LH	SUPPORT CG	
18	201841	1	CIERRE	CLOSING	ARRET	
19	201843	1	PLACA	PLATE	PLAQUE	
20	78248	4	REMACHE	RIVET	RIVET	
21	182113	4	TORNILLO	BOLT	BOULON	
22	3900	8	ARANDELA PLANA	PLAIN WASHER	RONDELLE PLANE	
23	3074	4	ARANDELA MUELLE	SPRING WASHER	RONDELLE RESSORT	
24	181184	4	TUERCA	NUT	ECROU	
25	182112	9	TORNILLO	BOLT	BOULON	
26	3840	9	ARANDELA PLANA	PLAIN WASHER	RONDELLE PLANE	
27	3074	9	ARANDELA MUELLE	SPRING WASHER	RONDELLE RESSORT	
28	181184	9	TUERCA	NUT	ECROU	

141911

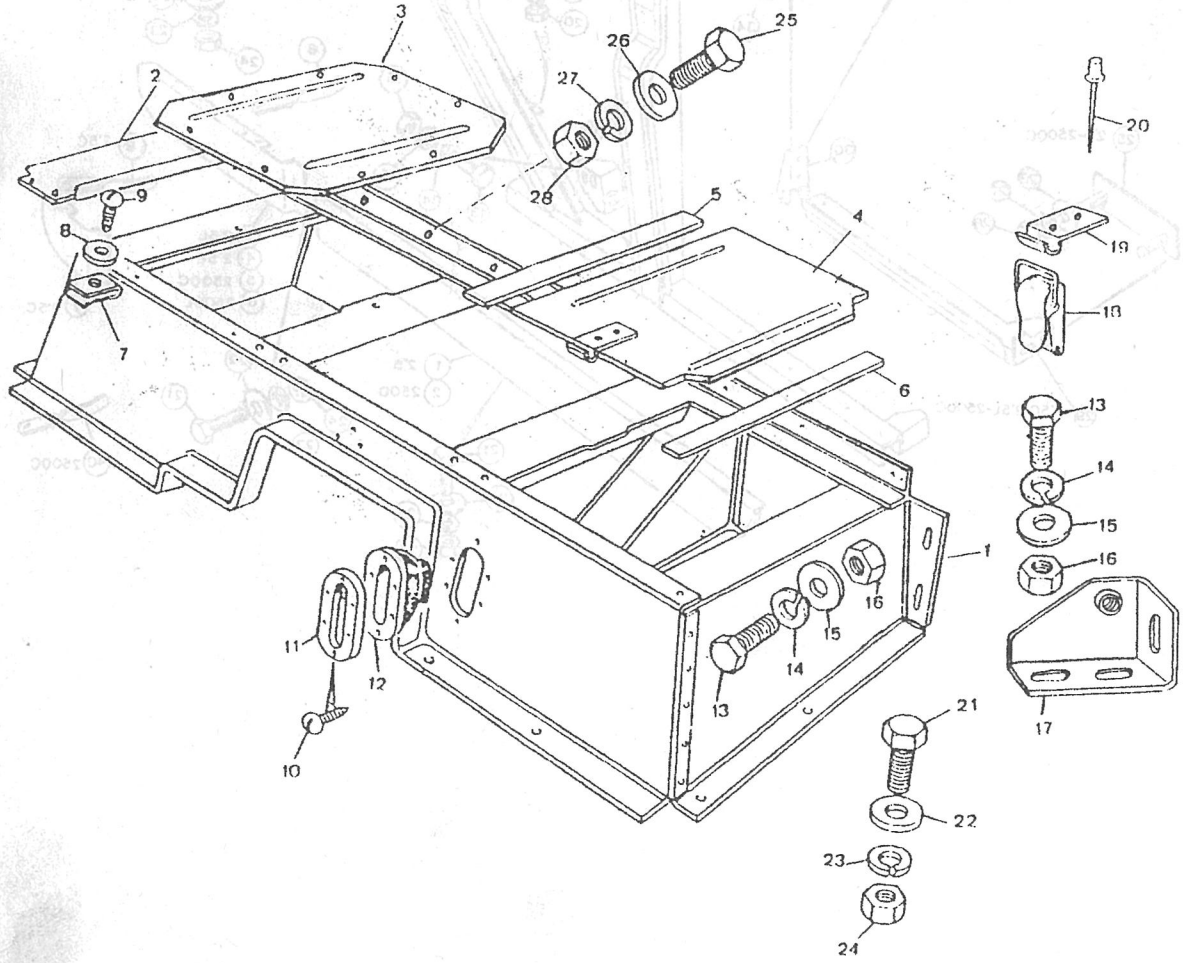

PUBLICACION N:790776 GRUPO=14 CARROCERIA SUBGRUPO=PISO DELANTERO
EDICION N: 1 GROUP=14 BODY SUBGROUP=FRONT FLOOR
GROUPE=14 CARROSSERIE SUBGROUPE=PLANCHER AVANT

N.FIG PLATE N.FIG	N.PIEZA PARTNUMBER N.PIECE	CAN QTY OUT	DENOMINACION	DESCRIPTION	DENOMINATION	OBSERVACIONES
1	730502	1	PANEL DIAFRAGMA	DIAPHRAGM PANEL	DIAPHRAGME	
2	730505	1	PANEL TUNEL CC	TUNNEL PANEL GB	PANNEAU COUVERCLE BV	
3	09409-07306	11	REMACHE PLASTICO	PLASTIC RIVET	RIVETPLASTIQUE	
4	79023	5	TUERCA PLASTICO	LOKUT NUT	ECROU PLASTIQUE	
5	730347	1	PLACA PISO L/I	FLOOR PLATE LH	TOLE DE PLANCHER CG	
6	730346	1	PLACA PISO L/D	FLOOR PLATE RH	TOLE DE PLANCHER CD	
7	78210	4	TORNILLO	BOLT	BOULON	
8	3900	8	ARANDELA PLANA	PLAIN WASHER	RONDELLE PLANE	
9	3074	4	ARANDELA MUELLE	SPRING WASHER	RONDELLE RESSORT	
10	181184	4	TUERCA	NUT	ECROU	
11	79192	5	TORNILLO	BOLT	BOULON	
12	3900	5	ARANDELA PLANA	PLAIN WASHER	RONDELLE PLANE	
13	79192	2	TORNILLO	BOLT	BOULON	
14	3821	2	ARANDELA PLANA	PLAIN WASHER	RONDELLE PLANE	
15	79023	2	TUERCA PLASTICO	PLASTIC NUT	ECROU PLASTIQUE	
16	203578	1	GUIA VARILLA TRA DEL	FRONT TRACTION ROD G	GUIDE TIGE TRACTION	
17	234658	1	CASQUILLO	BUSH	BAGUE	
18	320045	9	TORNILLO	BOLT	BOULON	
19	3900	9	ARANDELA PLANA	PLAIN WASHER	RONDELLE PLANE	
20	302532	9	TUERCA MUELLE	SPRING NUT	ECROU RESSORT	
21	79192	3	TORNILLO	BOLT	BOULON	
22	79023	3	TUERCA PLASTICO	PLASTIC NUT	ECROU PLASTIQUE	
23	78137	1	TORNILLO	BOLT	BOULON	
24	255209	2	TORNILLO	BOLT	BOULON	
25	3821	4	ARANDELA PLANA	PLAIN WASHER	RONDELLE PLANE	
26	3074	2	ARANDELA MUELLE	SPRING WASHER	RONDELLE RESSORT	
27	181184	2	TUERCA	NUT	ECROU	
28	320045	5	TORNILLO	BOLT	BOULON	
29	3900	5	ARANDELA PLANA	PLAIN WASHER	RONDELLE PLANE	
30	302532	5	TUERCA MUELLE	SPRING NUT	ECROU RESSORT	
31	203815	S-N	TIRA ADHESIVA	ADHESIVE STR	BANDE ADHESIVE	
32	03141-05165	6	TORNILLO	BOLT	BOULON	
33	203852	1	GUARDAPOLVOS PALANCA	SEAL-GEAR CHANGE LEV	JOINT D'ETANCHEITE	
34	730739	1	GUARDAPOLVOS P TRANS	SEAL-GEAR TRASF LEV	JOINT D'ETANCHEITE	
35	730709	1	PLACA	PLATE	PLAQUE	

142009

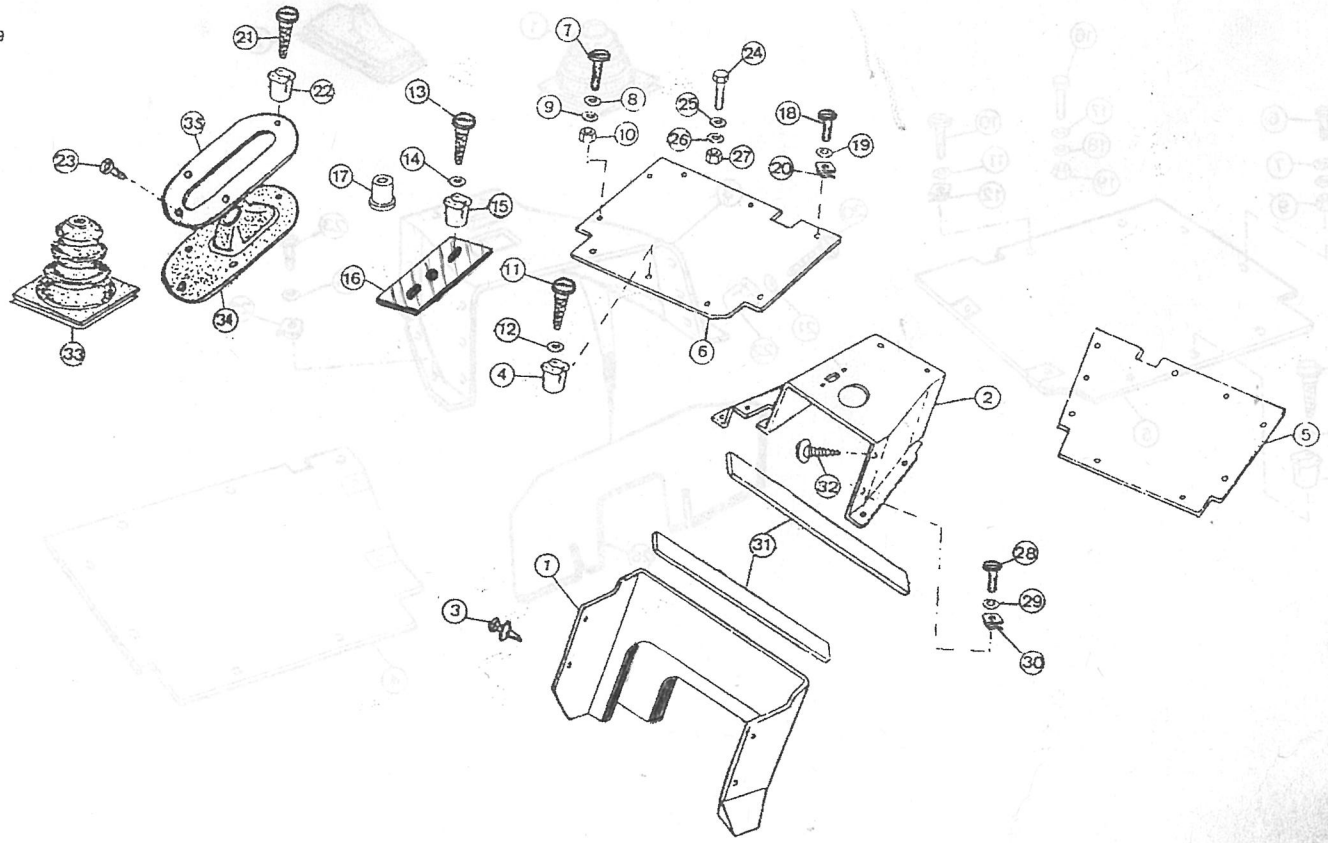

PUBLICACION N:790776 GRUPO=14 CARROCERIA SUBGRUPO=PISO DELANTERO
EDICION N: 1 GROUP=14 BODY SUBGROUP=FRONT FLOOR
GROUPE=14 CARROSSERIE SUBGROUPE=PLANCHER AVANT

N.FIG PLATE N.FIG	N.PIEZA PARTNUMBER N.PIECE	CAN QTY OUT	DENOMINACION	DESCRIPTION	DENOMINATION	OBSERVACIONES
1	203852	1	GUARDAPOLVOS PALA.CC	SEAL-GEAR CHANGE LEV	JOINT D'ETANCHEITE	
2	203416	1	GUARDAPOLVOS PAL TRA	SEAL-GEAR TRANSF LEV	JOINT D'ETANCHEITE	
3	730297	1	PANEL TUNEL CC	TUNNEL PANEL GB	PANNEAU COUVERCLE BV	
4	730296	1	PLACA PISO L/I	FLOOR PLATE LH	TOLE DE PLANCHER CG	
5	205773	1	PLACA DE PISO LD	FLOOR PLATE RH	TOLE DE PLANCHER CD	
6	78210	4	TORNILLO	BOLT	BOULON	
7	3900	8	ARANDELA PLANA	PLAIN WASHER	RONDELLE PLANE	
8	3074	4	ARANDELA MUELLE	SPRING WASHER	RONDELLE RESSORT	
9	181184	4	TUERCA	NUT	ECROU	
10	320045	5	TORNILLO	BOLT	BOULON	
11	3900	5	ARANDELA PLANA	PLAIN WASHER	RONDELLE PLANE	
12	302532	5	TUERCA MUELLE	SPRING NUT	ECROU RESSORT	
13	79192	5	TORNILLO	BOLT	BOULON	
14	3900	5	ARANDELA PLANA	PLAIN WASHER	RONDELLE PLANE	
15	79023	5	TUERCA PLASTICO	PLASTIC NUT	ECROU PLASTIQUE	
16	255209	2	TORNILLO	BOLT	BOULON	
17	3817	4	ARANDELA PLAQNA	PLAIN WASHER	RONDELLE PLANE	
18	3074	2	ARANDELA MUELLE	SPRING WASHER	RONDELLE RESSORT	
19	181184	2	TUERCA	NUT	ECROU	
20	79192	6	TORNILLO	BOLT	BOULON	
21	3817	6	ARANDELA PLANA	PLAIN WASHER	RONDELLE PLANE	
22	79023	6	TUERCA PLASTICO	PLASTIC NUT	ECROU PLASTIQUE	
23	320045	9	TORNILLO	BOLT	BOULON	
24	3817	9	ARANDELA PLANA	PLAIN WASHER	RONDELLE PLANE	
25	302532	9	TUERCA MUELLE	SPRING NUT	ECROU RESSORT	
26	730267	1	INSONORIZANTE	SOUND-PROOF	INSONORISANT	

142012

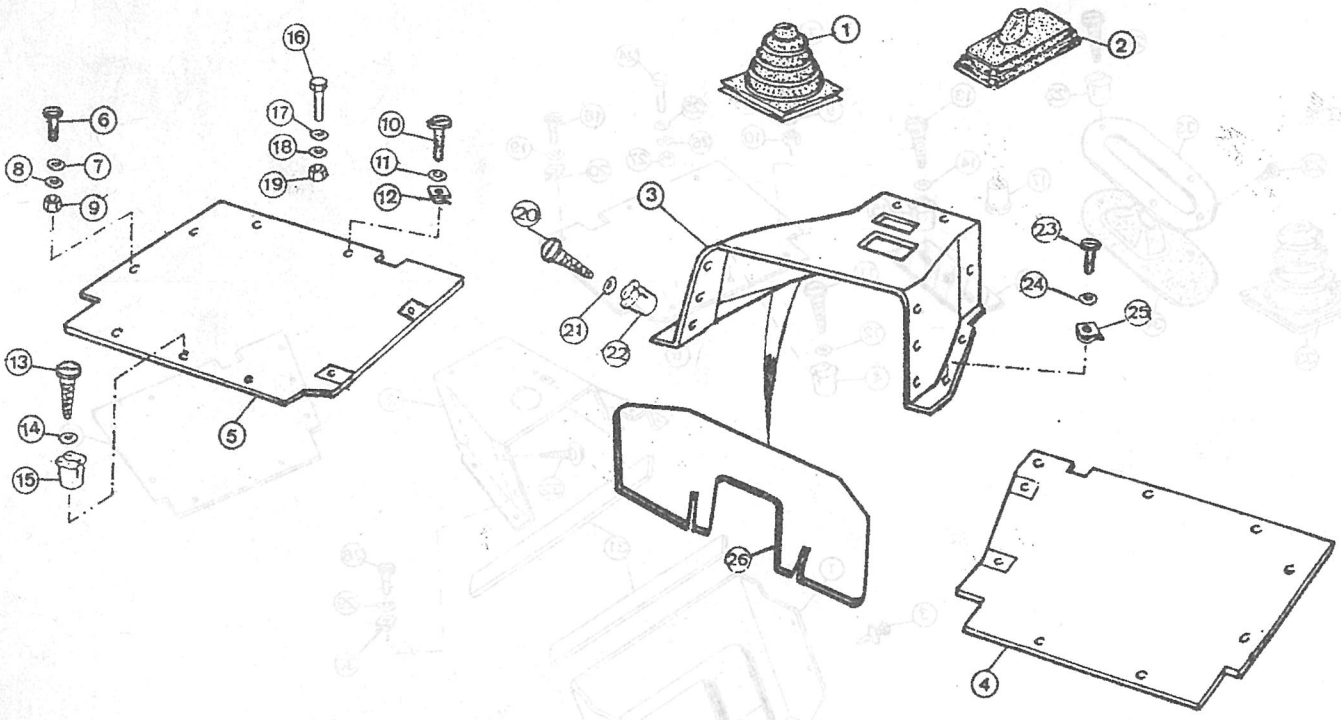

PUBLICACION N:790776 GRUPO=14 CARROCERIA SUBGRUPO=CAJA TRASERA
EDICION N: 1 GROUP=14 BODY SUBGROUP=REAR BOX
GROUPE=14 CARROSSERIE SUBGROUPE=BOITE ARRIERE

N.FIG PLATE N.FIG	N.PIEZA PARTNUMBER N.PIECE	CAN QTY OUT	DENOMINACION	DESCRIPTION	DENOMINATION	OBSERVACIONES
1	738287	1	CAJA TRASERA	REAR BODY	CAISE ARRIERE	
2	738288	1	CONJ.LATERAL L/I	SIDE PANEL ASSY LH	ENS PANNEAU LATER CG	
3	738289	1	CONJ.LATERAL L/D	SIDE PANEL ASSY RH	ENS PANNEAU LATER CD	
4	737029	1	PANEL LATERAL LI	SIDE PANEL LH	PANNEAU LATERALE CG	
5	737030	1	PANEL LATERAL LD	SIDE PANEL RH	PANNEAU LATERALE CD	
6	737659	1	PANEL TRASERO L/I	REAR PANEL LH	PANNEAU ARRIERE CG	
7	737660	1	PANEL TRASERO L/D	REAR PANEL RH	PANNEAU ARRIERE CD	
8	330301	1	PANEL DELANTERO	FRONT PANEL	PANNEAU AVANT	
9	330267	1	PISO DE CAJA TRASERA	REAR BODY FLOOR	PLANCHER DE CAISE AR	
10	333159	1	PERFIL	ANGLE	PROFIL	
11	159721	3	CONJ TRAVESA/O	CROSSMEMBER ASSY	ENS SOMMIER TRANSVER	
12	165667	12	REMACHE	RIVET	RIVET	
13	189475	14	REMACHE POP	RIVET POP	RIVET POP	
	78248	18	REMACHE POP	RIVET POP	RIVET POP	
	78410	4	REMACHE POP	RIVET POP	RIVET POP	
14	09404A06402	2	ABRAZADERA	CLAMP	COLLIER	
15	332582	6	PLACA DE GOMA	RUBBER PLATE	PLAQUE DE CAOUTCHOUC	

142110

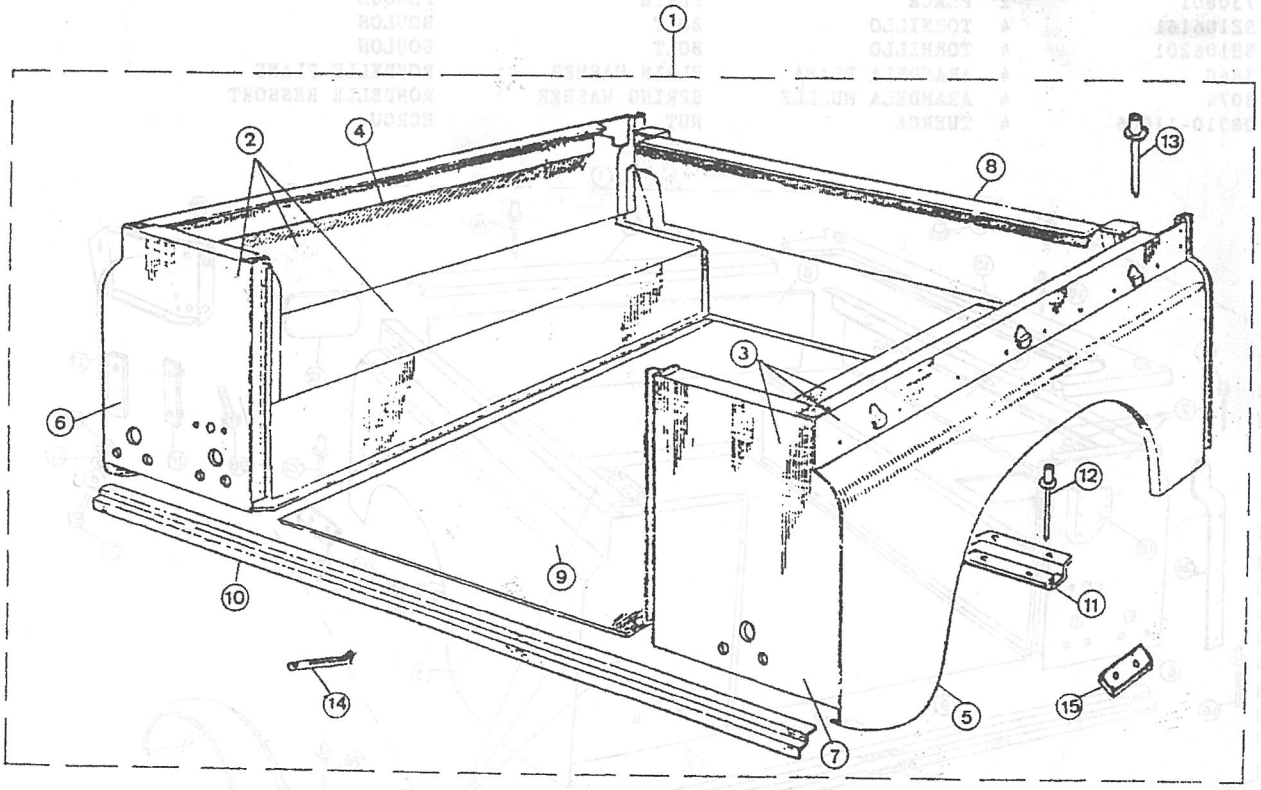

PUBLICACION N:790776 GRUPO=14 CARROCERIA SUBGRUPO=CAJA TRASERA
EDICION N: 1 GROUP=14 BODY SUBGROUP=REAR BOX
GROUPE=14 CARROSSERIE SUBGROUPE=BOITE ARRIERE

N.FIG PLATE N.FIG	N.PIEZA PARTNUMBER N.PIECE	CAN QTY OUT	DENOMINACION	DESCRIPTION	DENOMINATION	OBSERVACIONES
1	737570	1	CAJA TRASERA	REAR BODY	CAISE ARRIERE	
2	737571	1	CONF LATERAL LI	SIDE PANEL ASSY LH	ENS PANNEAU LATER CG	
3	737572	1	CONF LATERAL LD	SIDE PANEL ASSY RH	ENS PANNEAU LATER CD	
4	737573	1	PANEL LATERAL LI	SIDE PANEL LH	PANNEAU LATERALE CG	
5	737574	1	PANEL LATERAL LD	SIDE PANEL RH	PANNEAU LATERALE CD	
6	737704	1	PANEL TRASERO LI	REAR PANEL LH	PANNEAU ARRIERE CG	
7	206292	1	PANEL TRASERO LD	REAR PANEL RH	PANNEAU ARRIERE CD	
8	737605	1	PANEL DELANTERO	FRONT PANEL	PANNEAU AVANT	
9	737600	1	PISO DE CAJA TRASERA	REAR BODY FLOOR	PLANCHER DE CAISE AR	
10	333159	1	CONJ. PERFIL	ANGLE ASSY	ENS PROFIL	
11	159721	3	CONF TRAVESA/O	CROSSMEMBER ASSY	ENS SOMMIER TRANSVER	
12	205889	2	TAPA DELANTERA	FRONT COVER	COUVERCLE AVANT	
13	205988	1	REMATE SUPERIOR DELA	FRONT TOP CAPPING	FLANC DE CAISE AVANT	
14	302186	12	REMACHE POP	RIVET POP	RIVET POP	
	78248	16	REMACHE POP	RIVET POP	RIVET POP	
15	737623	1	REMATE SUPERIOR LI	TOP CAPPING LH	FLANC DE CAISE CG	
	737624	1	REMATE SUPERIOR LD	TOP CAPPING RH	FLANC DE CAISE CD	
16	189475	14	REMACHE	RIVET	RIVET	
	78248	38	REMACHE	RIVET	RIVET	
	78410	4	REMACHE POP	RIVET POP	RIVET POP	
17	300789	28	REMACHE	RIVET	RIVET	
18	730473	1	REMATE ESQUINA L/D	REAR CORNER BRACK RH	CHAPE DE COIN CD	
	730474	1	REMATE ESQUINA L/I	REAR CORNER BRACK LH	CHAPE DE COIN CG	
19	730088	1	ALETINES LI	EYEBROW MOULDING LH	MOULURE D'AILE CG	
	730089	1	ALETINES LD	EYEBROW MOULDING RH	MOULURE D'AILE CD	
20	09409-07306	24	REMACHE DE PLASTICO	PLASTIC RIVET	RIVET DE PLASTIQUE	
21	09404A06402	2	ABRAZADERA	CLAMP	ETRIER	
22	165667	12	REMACHE	RIVET	RIVET	
23	332582	6	PLACA GOMA	RUBBER PLATE	PLAQUE CAOUTCHOUC	
24	730788	1	REFUERZO L/D	REINFORCEMENT RH	RENFORT CD	
	730789	1	REFUERZO L/I	REINFORCEMENT LH	RENFORT CG	
25	MWC1736	1	SOPORTE CERRADERO LD	SHROUD-STRIKER RH	SUPPORT DE GACHE CD	
	MWC1737	1	SOPORTE CERRADERO LI	SHROUD-STRIKER LH	SUPPORT DE GACHE CG	
26	MRC9431	2	PLACA CON TUERCAS	PLATE WITH NUT	PLAQUE AVEC ECROU	
27	730801	2	PLACA	PLATE	PLAQUE	
28	SE106161	4	TORNILLO	BOLT	BOULON	
29	SH106201	4	TORNILLO	BOLT	BOULON	
30	3840	4	ARANDELA PLANA	PLAIN WASHER	RONDELLE PLANE	
31	3074	4	ARANDELA MUELLE	SPRING WASHER	RONDELLE RESSORT	
32	08310-11066	4	TUERCA	NUT	ECROU	

142111

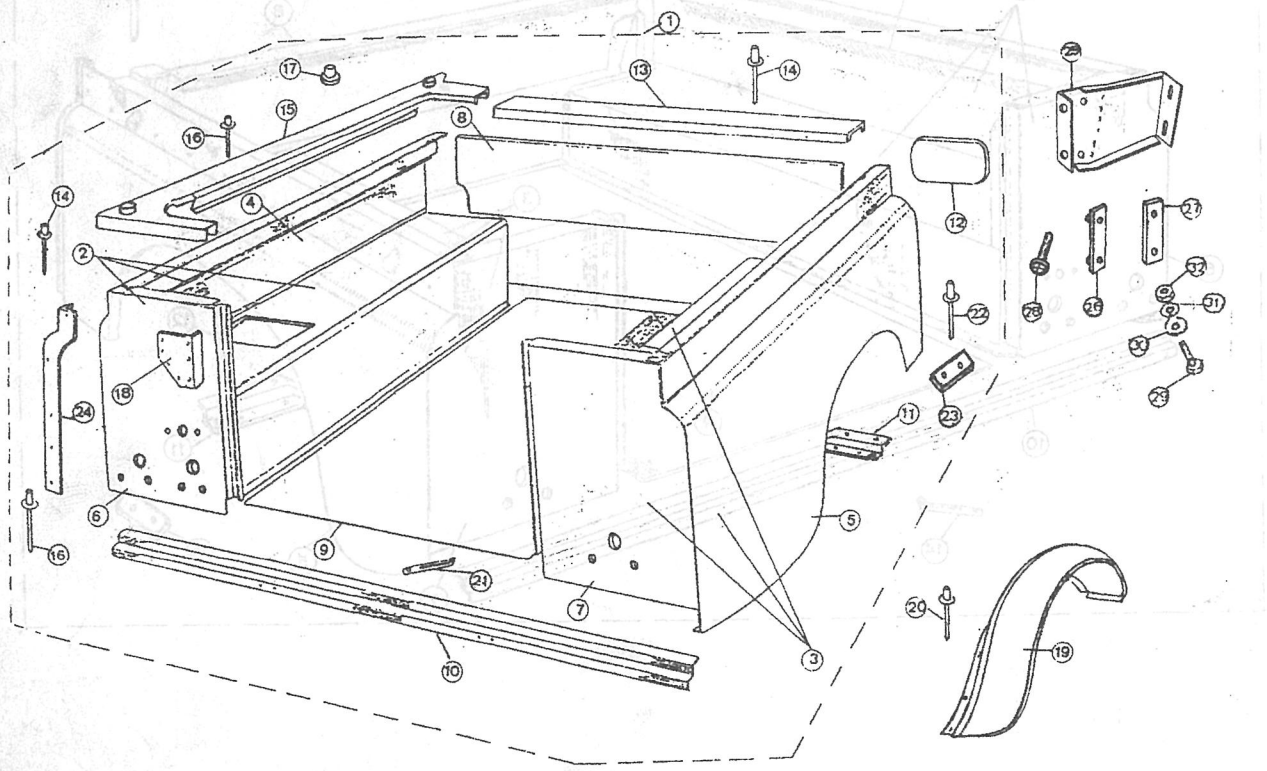

PUBLICACION N:790776 GRUPO=14 CARROCERIA SUBGRUPO=CAJA TRASERA
EDICION N: 1 GROUP=14 BODY SUBGROUP=REAR BOX
GROUPE=14 CARROSSERIE SUBGROUPE=BOITE ARRIERE

N.FIG PLATE N.FIG	N.PIEZA PARTNUMBER N.PIECE	CAN QTY OUT	DENOMINACION	DESCRIPTION	DENOMINATION	OBSERVACIONES
1	737036	1	CAJA TRASERA	REAR BODY	CAISE ARRIERE	
2	330243E2	1	PANEL DELANTERO	FRONT PANEL	PANNEAU AVANT	
3	737037	1	CONJ.LATERAL L/I	SIDE PANEL ASSY LH	ENS PANNEAU LATER CG	
4	737038	1	CONJ.LATERAL L/D	SIDE PANEL ASSY RH	ENS PANNEAU LATER CD	
5	737039	1	PANEL LATERAL L/I	SIDE PANEL LH	PANNEAU LATERALE CG	
6	737040	1	PANEL LATERAL L/D	SIDE PANEL RH	PANNEAU LATERALE CD	
7	209602	1	PISO CAJA TRASERA	REAR BODY FLOOR	PLANCHER DE CAISE AR	
8	206291	1	PANEL TRASERO L/I	REAR PANEL LH	PANNEAU ARRIERE CG	
9	206292	1	PANEL TRASERO L/D	REAR PANEL RH	PANNEAU ARRIERE CD	
10	333159	1	PERFIL	ANGLE	PROFIL	
11	159721	6	CONJ TRAVESA\O	CROSSMEMBER ASSY	ENS SOMMIER TRANSVER	
12	78248	32	REMACHE	RIVET	RIVET	
	78410	12	REMACHE	RIVET	RIVET	
13	09404A06402	2	ABRAZADERA	CLAMP	COLLIER	
14	165667	24	REMACHE	RIVET	RIVET	
15	332582	12	PLACA GOMA	RUBBER PLATE	PLAQUE CAOUTCHOUC	
16	183205	22	REMACHE	RIVET	RIVET	
	189475	22	REMACHE	RIVET	RIVET	

142113

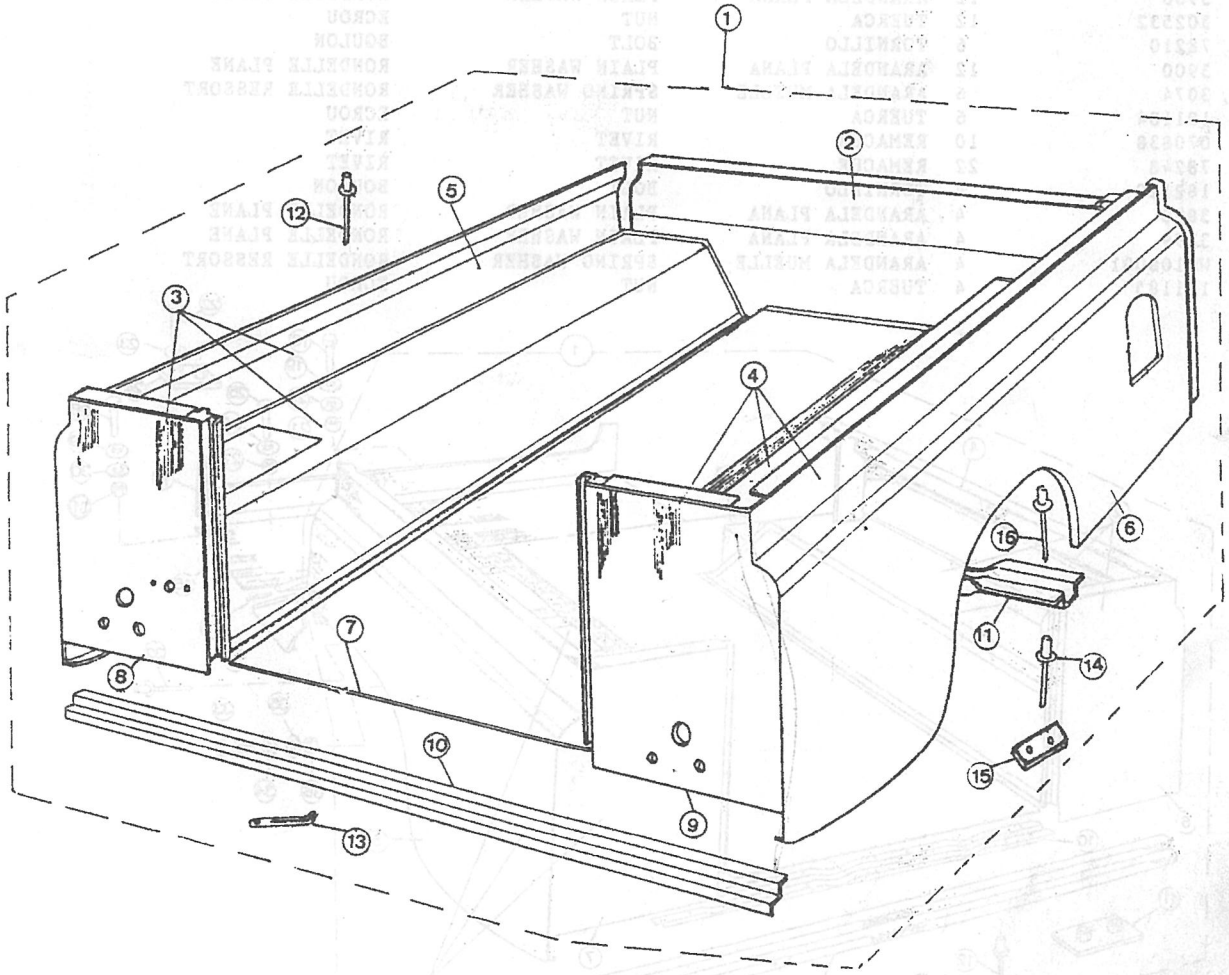

PUBLICACION N:790776 GRUPO=14 CARROCERIA SUBGRUPO=CAJA TRASERA
EDICION N: 1 GROUP=14 BODY SUBGROUP=REAR BOX
GROUPE=14 CARROSSERIE SUBGROUPE=BOITE ARRIERE

N.FIG PLATE N.FIG	N.PIEZA PARTNUMBER N.PIECE	CAN QTY OUT	DENOMINACION	DESCRIPTION	DENOMINATION	OBSERVACIONES
1	738021	1	CAJA TRASERA	REAR BODY	CAISE ARRIERE	
2	206367	1	CONJ LATERAL LI	SIDE PANEL ASSY LH	ENS PANNEAU LATER CG	
3	738023	1	CONJ:LATERAL L/D	SIDE PANEL ASSY RH	ENS PANNEAU LATER CD	
4	208289	1	PANEL LATERAL LI	SIDE PANEL LH	PANNEAU LATERALE CG	
5	208290	1	PANEL LATERAL LD	SIDE PANEL RH	PANNEAU LATERALE CD	
6	206293	1	PANEL TRASERO LI	REAR PANEL LH	PANNEAU ARRIERE CG	
7	206292	1	PANEL TRASERO LD	REAR PANEL RH	PANNEAU ARRIERE CD	
8	209600	1	PISO DE CAJA TRASERA	FLOOR REAR BODY	PLANCHER DE CAISE AR	
9	333159	1	PERFIL	ANGLE	PROFIL	
10	159721	4	CONJ TRAVESA/O	CROSSMEMBER ASSY	ENS SOMMIER TRANSVER	
11	332451	1	PLACA CON TUERCAS	PLATE WITH ECROUS	PLAQUE AVEC NUTS	
12	78248	53	REMACHE POP	RIVET POP	RIVET POP	
	78410	2	REMACHE POP	RIVET POP	RIVET POP	
13	189475	30	REMACHE MONOBOLT	RIVET MONOBOLT	RIVET MONOBOLT	
14	333243K1	1	PANEL LD	PANEL RH	PANNEAU CD	
	333244K1	1	PANEL LI	PANEL LH	PANNEAU CG	
15	333263	2	PLACA DE GOMA	PLATE OF RUBBER	PLAQUE DE CAOUTCHOUC	
16	209855	1	PISO INTERMEDIO	INTERMEDIATE FLOOR	INTERMEDIAIRE PLANCH	
17	345149	1	FRONTAL PISO	FLOOR FRONTAL	FRONTAL PLANCHER	
18	182113	9	TORNILLO	BOLT	BOULON	
19	3840	9	ARANDELA PLANA	PLAIN WASHER	RONDELLE PLANE	
20	3074	9	ARANDELA MUELLE	SPRING WASHER	RONDELLE RESSORT	
21	181184	9	TUERCA	NUT	ECROU	
22	182113	8	TORNILLO	BOLT	BOULON	
23	3074	8	ARANDELA MUELLE	SPRING WASHER	RONDELLE RESSORT	
	3900	8	ARANDELA PLANA	PLAIN WASHER	RONDELLE PLANE	
24	333714	2	PLACA CON TUERCAS	PLATE WHIT NUTS	PLAQUE AVEC ECROUS	
25	320045	12	TORNILLO	BOLT	BOULON	
26	3900	12	ARANDELA PLANA	PLAIN WASHER	RONDELLE PLANE	
27	302532	12	TUERCA	NUT	ECROU	
28	78210	6	TORNILLO	BOLT	BOULON	
29	3900	12	ARANDELA PLANA	PLAIN WASHER	RONDELLE PLANE	
30	3074	6	ARANDELA MUELLE	SPRING WASHER	RONDELLE RESSORT	
31	181184	6	TUERCA	NUT	ECROU	
32	070838	10	REMACHE	RIVET	RIVET	
	78248	22	REMACHE	RIVET	RIVET	
33	182120	4	TORNILLO	BOLT	BOULON	
34	3830	4	ARANDELA PLANA	PLAIN WASHER	RONDELLE PLANE	
	3899	4	ARANDELA PLANA	PLAIN WASHER	RONDELLE PLANE	
35	WM108001	4	ARANDELA MUELLE	SPRING WASHER	RONDELLE RESSORT	
36	181185	4	TUERCA	NUT	ECROU	

142114

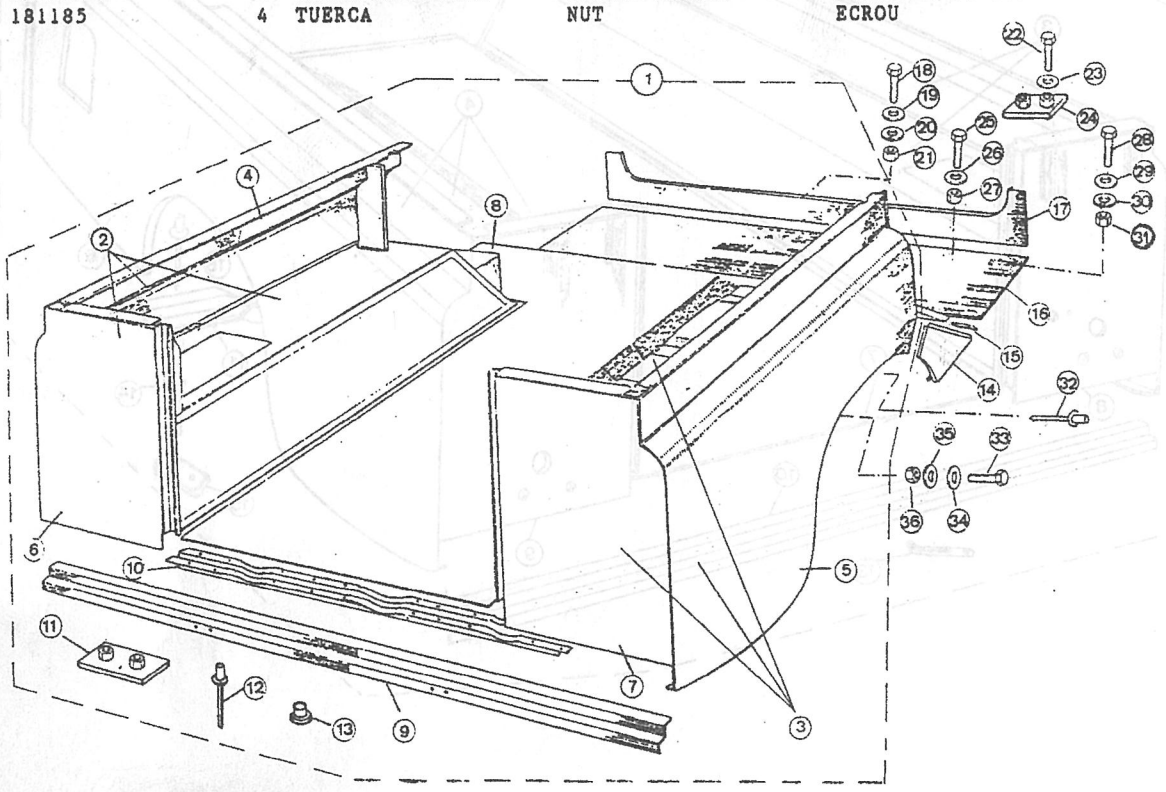

PUBLICACION N:790776 GRUPO=14 CARROCERIA SUBGRUPO=CAJA TRASERA
EDICION N: 1 GROUP=14 BODY SUBGROUP=REAR BOX
GROUPE=14 CARROSSERIE SUBGROUPE=BOITE ARRIERE

N.FIG PLATE N.FIG	N.PIEZA PARTNUMBER N.PIECE	CAN QTY OUT	DENOMINACION	DESCRIPTION	DENOMINATION	OBSERVACIONES
1	737592	1	CAJA TRASERA	REAR BODY	CAISE ARRIERE	
2	737589	1	CONJ LATERAL LI	SIDE PANEL ASSY LH	ENS PANNEAU LATER CG	
3	737588	1	CONJ LATERAL LD	SIDE PANEL ASSY RH	ENS PANNEAU LATER CD	
4	737587	1	PANEL LATERAL LI	SIDE PANEL LH	PANNEAU LATERALE CG	
5	737586	1	PANEL LATERAL LD	SIDE PANEL RH	PANNEAU LATERALE CD	
6	737704	1	PANEL TRASERO LI	REAR PANEL LH	PANNEAU ARRIERE CG	
7	206292	1	PANEL TRASERO LD	REAR PANEL RH	PANNEAU ARRIERE CD	
8	209600	1	PISO DE CAJA TRASEVA	REAR BODY FLOOR	PLANCHER DE CAISE AR	
9	737910	1	REMATE SUPERIOR L/I	TOP CAPPING LH	PLANC DE CAISE CG	
	737911	1	REMATE SUPERIOR L/D	TOP CAPPING RH	PLANC DE CAISE CD	
10	78248	16	REMACHE	RIVET	RIVET	
11	730473	1	REMATE ESQUINA L/D	REAR CORNER BRACK RH	CHAPE DE COIN CD	
	730474	1	REMATE ESQUINA L/I	REAR CORNER BRACK LH	CHAPE DE COIN CG	
12	78248	6	REMACHE	RIVET	RIVET	
13	159721	4	CONJ TRAVESA/O	CROSSMEMBER ASSY	ENS SOMMIER TRANSVER	
14	333159	1	PERFIL	ANGLE	PROFIL	
15	332451	1	PLACA CON TUERCAS	PLATE WITH NUTS	PLAQUE AVEC ECROUS	
16	78248	53	EMACHE POP	RIVET POP	RIVET POP	
	78410	2	EMACHE POP	RIVET POP	RIVET POP	
17	189475	30	REMACHE MONOBOLT	RIVET MONOBOLT	RIVET MONOBOLT	
18	205788	1	PANEL LI	PANEL LH	PANNEAU CG	
	205789	1	PANEL LD	PANEL RH	PANNEAU CD	
19	070838	10	REMACHE	RIVET	RIVET	
	78248	22	REMACHE	RIVET	RIVET	
20	182120	4	TORNILLO	BOLT	BOULON	
21	3830	4	ARANDELA PLANA	PLAIN WASHER	RONDELLE PLANE	
	3899	4	ARANDELA PLANA	PLAIN WASHER	RONDELLE PLANE	
22	WM108001	4	ARANDELA MUELLE	SPRING WASHER	RONDELLE RESSORT	
23	181185	4	TUERCA	NUT	ECROU	
24	209855	1	PISO INTERMEDIO	INTERMEDIATE FLOOR	INTERMEDIAIRE PLANCH	
25	78210	6	TORNILLO	BOLT	BOULON	
26	3900	12	ARANDELA PLANA	PLAIN WASHER	RONDELLE PLANE	
27	3074	6	ARANDELA MUELLE	SPRING WASHER	RONDELLE RESSORT	
28	181184	6	TUERCA	NUT	ECROU	
29	320045	12	TORNILLO	BOLT	BOULON	
30	3900	12	ARANDELA PLANA	PLAIN WASHER	RONDELLE PLANE	
31	302532	12	TUERCA	NUT	ECROU	
32	345149	1	FRONTAL PISO	FLOOR FRONTAL	FRONTA PLANCHER	
33	182113	9	TORNILLO	BOLT	BOULON	
34	3840	9	ARANDELA PLANA	PLAIN WASHER	RONDELLE PLANE	
35	3074	9	ARANDELA MUELLE	SPRING WASHER	RONDELLE RESSORT	
36	181184	9	TUERCA	NUT	ECROU	
37	182113	8	TORNILLO	BOLT	BOULON	
38	3074	8	ARANDELA MUELLE	SPRING WASHER	RONDELLE RESSORT	

142116

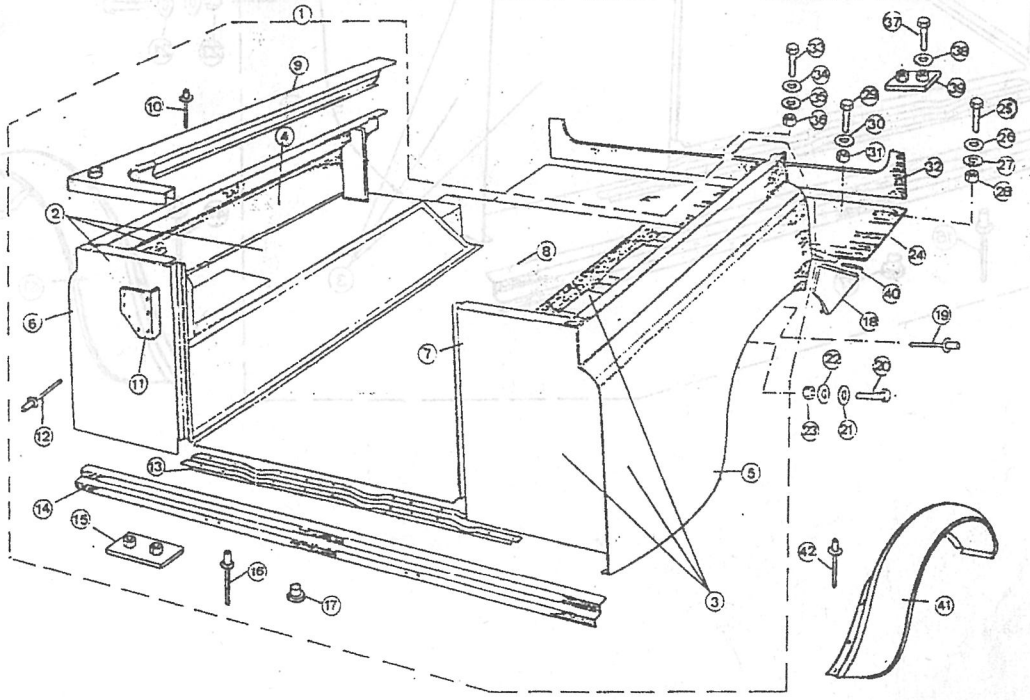

PUBLICACION N:790776 GRUPO=14 CARROCERIA SUBGRUPO=CAJA TRASERA
EDICION N: 1 GROUP=14 BODY SUBGROUP=REAR BOX
GROUPE=14 CARROSSERIE SUBGROUPE=BOITE ARRIERE

N.FIG PLATE N.FIG	N.PIEZA PARTNUMBER N.PIECE	CAN QTY OUT	DENOMINACION	DESCRIPTION	DENOMINATION	OBSERVACIONES
	3900	8	ARANDELA PLANA	PLAIN WASHER	RONDELLE PLANE	
39	333714	2	PLACA CON TUERCAS	PLATE WITH NUTS	PLAQUE AVEC ECROUS	
40	333263	2	PLACA DE GOMA	PLATE OF RUBBER	PLAQUE DE CAOUTCHOUC	
41	730088	1	MOLDURA ALETA LI	EYEBROW MOULDING LH	GABARIT DE AILE CG	
	730089	1	MOLDURA ALETA LD	EYEBROW MOULDING RH	GABARIT DE AILE CD	
42	09409-07306	24	REMACHE DE PLASTICO	PLASTIC RIVET	RIVET DE PLASTIQUE	

142116

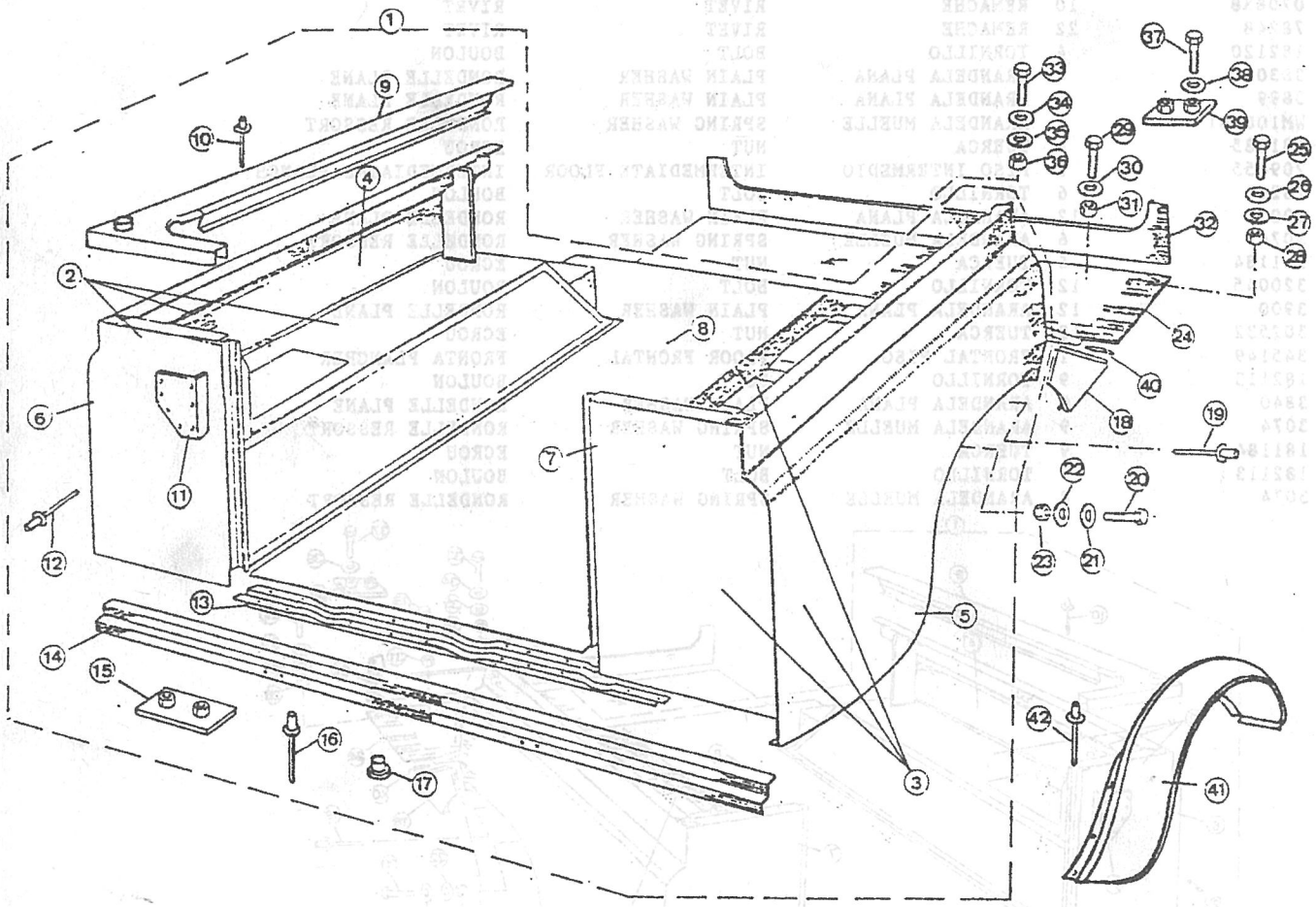

PUBLICACION N:790776 GRUPO=14 CARROCERIA SUBGRUPO=CAJA TRASERA-DOBLE P
EDICION N: 1 GROUP=14 BODY SUBGROUP=REAR BOX-DOUBLE DOOR
GROUPE=14 CARROSSERIE SUBGROUPE=BOITE ARRIERE-DOUBLE

N.FIG PLATE N.FIG	N.PIEZA PARTNUMBER N.PIECE	CAN QTY OUT	DENOMINACION	DESCRIPTION	DENOMINATION	OBSERVACIONES
1	453-V-220	1	CAJA TRASERA	REAR BODY	CAISSE ARRIERE	
2	347035K2	1	PANEL LATERAL L/D	SIDE PANEL RH	PANNEAU LATERAL CD	
	347036K2	1	PANEL LATERAL L/I	SIDE PANEL LH	PANNEAU LATERAL CG	
3	453-V-221	1	PASO DE RUEDA L/D	WHEEL PITCH RH	PASSAGE ROUE CD	
	453-V-222	1	PASO DE RUEDA L/I	WHEEL PITCH LH	PASSAGE ROUE CG	
4	453-V-223	1	PASO DE RUEDA TRA LD	REAR WHEEL PITCH RH	PASS DE ROUE ARR CD	
	453-V-224	1	PASO DE RUEDA TRA.LI	REAR WHEEL PITCH LH	PASS DE ROUE ARR CG	
5	453-V-234	1	REMATE TRASERO L/D	REAR CAPPING RH	COURE JOINT CD	
	453-V-235	1	REMATE TRASERO L/I	REAR CAPPING LH	COURE JOINT CG	
6	453-V-251	1	REMATE SUPERIOR L/D	UPPER CAPPING RH	COURE JOINT SUPER CD	
	453-V-252	1	REMATE SUPERIOR L/I	UPPER CAPPING LH	COURE JOINT SUPER CG	
7	790354	1	CONJ LATERAL LD	SIDE ASSY RH	ENS LATERAL CD	
	790355	1	CONJ LATERAL LI	SIDE ASSY LH	ENS LATERAL CG	
8	209602	1	PISO CAJA TRASERA	REAR BODY FLOOR	PLANCHER DE CAISE AR	
9	330243E2	1	PANEL DELANTERO	FRONT PANEL	PANNEAU AVANT	

142132

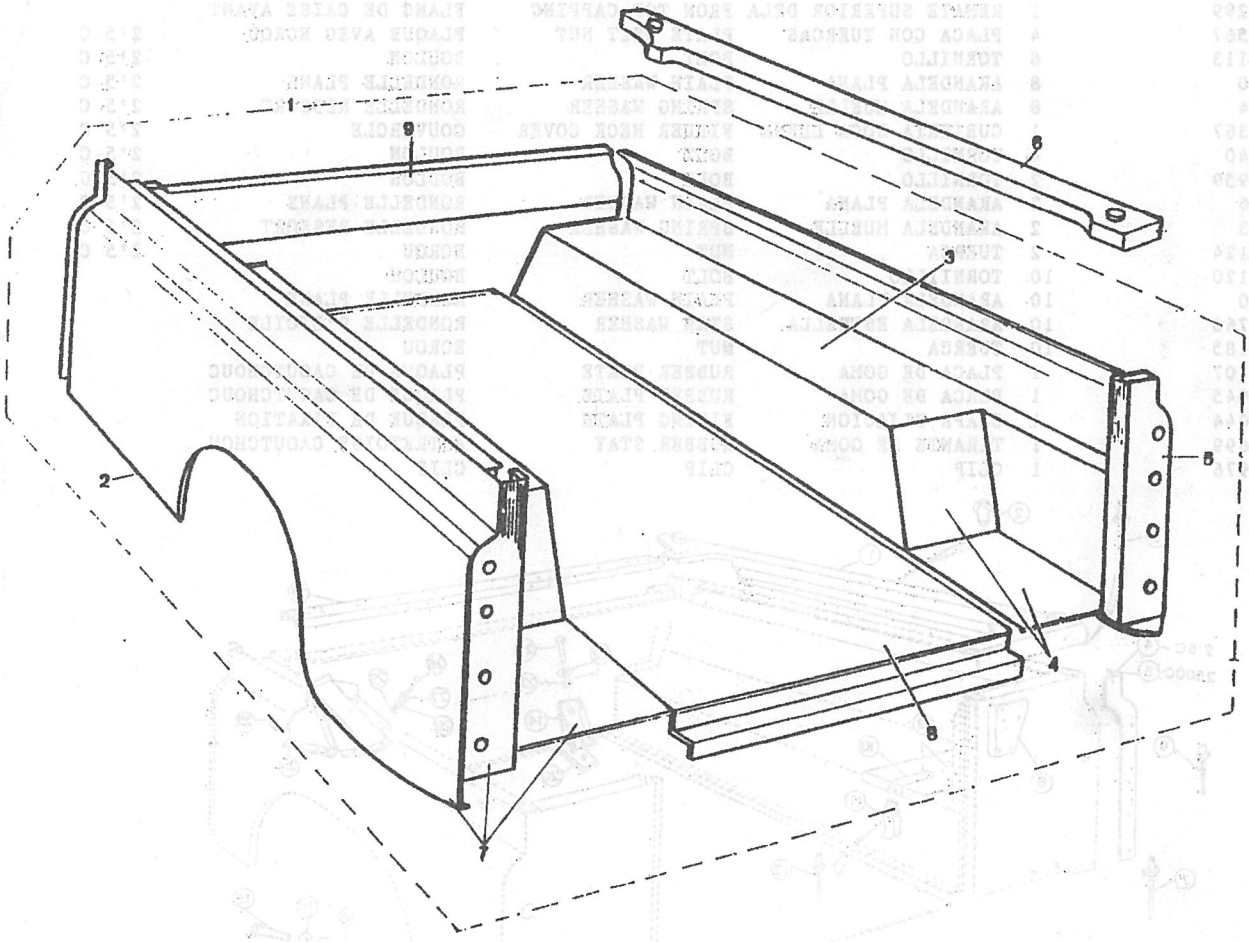

PUBLICACION N:790776 GRUPO=14 CARROCERIA SUBGRUPO=REMATES DE CAJA
EDICION N: 1 GROUP=14 BODY SUBGROUP=REAR BODY CAPPING
GROUPE=14 CARROSSERIE SUBGROUPE=COUVRE JOINT

N.FIG PLATE N.FIG	N.PIEZA PARTNUMBER N.PIECE	CAN QTY OUT	DENOMINACION	DESCRIPTION	DENOMINATION	OBSERVACIONES
1	738295	1	REMATE SUPERIOR L/D	TOP CAPPING RH	FLANC DE CAISE CD	
	738296	1	REMATE SUPERIOR L/I	TOP CAPPING LH	FLANC DE CAISE CG	
2	300789	18	REMACHE	RIVET	RIVET	
3	78248	6	REMACHE	RIVET	RIVET	
4	730486	1	REFUERZO L/D	REINFORCEMENT RH	RENFORT CD	2'5 C
	730487	1	REFUERZO L/I	REINFORCEMENT LH	RENFORT CG	
5	730788	1	REFUERZO L/D	REINFORCEMENT RH	RENFORT CD	2500 C
	730789	1	REFUERZO L/I	REINFORCEMENT LH	RENFORT CG	
6	78248	20	REMACHE	RIVET	RIVET	
7	78410	2	REMACHE	RIVET	RIVET	
8	730473	1	REMATE ESQUINA L/D	REAR CORNER BRACK RH	CHAPE DE COIN CD	
	730474	1	REMATE ESQUINA L/I	REAR CORNER BRACK LH	CHAPE DE COIN CG	
9	209869	1	TAPA DE COFRE	SPARE WHEEL HO COVER	COUVERCLE DE COFFRET	2'5 C
	737926	1	TAPA DE COFRE	SPARE WHEEL HO COVER	COUVERCLE DE COFFRET	2500 C
10	201843	1	CIERRE DE TAPA COFRE	HOOK FOR OVERCENTRE	FERMOIR DE COUVERCLE	
11	201841	1	CIERRE DE PRESION	OVERCENTRE CATCH	FERMOIR DE PRESSION	
12	78248	2	REMACHE	RIVET	RIVET	
13	332521	2	TIRANTE	STAY	TIGE DE PASSAGE ROVE	
14	338752	4	SOPORTE	SUPPORT	SUPPORT	2'5 C
15	182112	2	TORNILLO	BOLT	BOULON	
	78210	2	TORNILLO	BOLT	BOULON	
16	3840	4	ARANDELA PLANA	PLAIN WASHER	RONDELLE PLANE	
17	3074	4	ARANDELA MUELLE	SPRING WASHER	RONDELLE RESSORT	
18	181184	4	TUERCA	NUT	ECROU	
19	738299	1	REMATE SUPERIOR DELA	FRON TOP CAPPING	FLANC DE CAISE AVANT	
20	336567	4	PLACA CON TUERCAS	PLATE WHIT NUT	PLAQUE AVEC ECROU	2'5 C
21	182113	8	TORNILLO	BOLT	BOULON	2'5 C
22	3900	8	ARANDELA PLANA	PLAIN WASHER	RONDELLE PLANE	2'5 C
23	3074	8	ARANDELA MUELLE	SPRING WASHER	RONDELLE RESSORT	2'5 C
24	330367	1	CUBIERTA BOCA LLENA	FILLER NECK COVER	COUVERCLE	2'5 C
25	78140	4	TORNILLO	BOLT	BOULON	2'5 C
26	250959	2	TORNILLO	BOLT	BOULON	2'5 C
27	3816	2	ARANDELA PLANA	PLAIN WASHER	RONDELLE PLANE	2'5 C
28	3073	2	ARANDELA MUELLE	SPRING WASHER	RONDELLE RESSORT	2'5 C
29	180124	2	TUERCA	NUT	ECROU	2'5 C
30	182120	10	TORNIILLO	BOLT	BOULON	
31	3830	10	ARANDELA PLANA	PLAIN WASHER	RONDELLE PLANE	
32	054760	10	ARANDELA ESTRELLA	STAR WASHER	RONDELLE D'ETOILE	
33	181185	10	TUERCA	NUT	ECROU	
34	166707	1	PLACA DE GOMA	RUBBER PLATE	PLAQUE DE CAOUTCHOUC	
35	202045	1	PLACA DE GOMA	RUBBER PLATE	PLAQUE DE CAOUTCHOUC	
36	202044	1	CHAPA FIJACION	FIXING PLATE	PLAQUE DE FIXATION	
37	153699	1	TIRANTE DE GOMA	RUBBER STAY	ENTRETOISE CAOUTCHOU	
38	153976	1	CLIP	CLIP	CLIP	

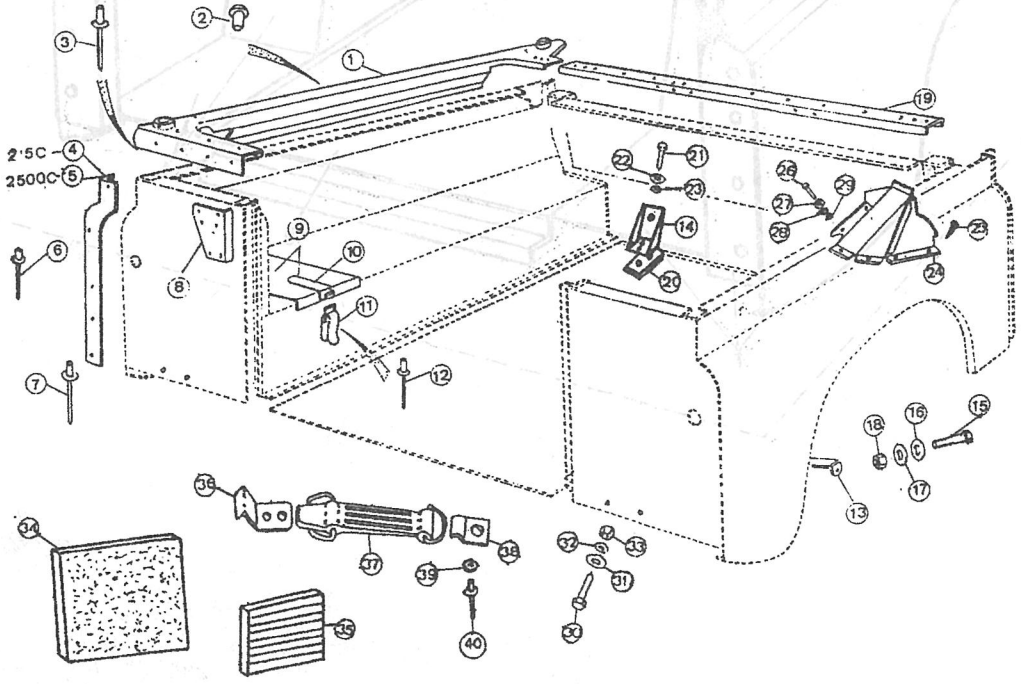

PUBLICACION N:790776 GRUPO=14 CARROCERIA SUBGRUPO=REMATES DE CAJA
EDICION N: 1 GROUP=14 BODY SUBGROUP=REAR BODY CAPPING
GROUPE=14 CARROSSERIE SUBGROUPE=COUVRE JOINT

N.FIG PLATE N.FIG	N.PIEZA PARTNUMBER N.PIECE	CAN QTY OUT	DENOMINACION	DESCRIPTION	DENOMINATION	OBSERVACIONES
39	3816	1	ARANDELA PLANA	PLAIN WASHER	RONDELLE PLANE	
40	78248	3	REMACHE	RIVET	RIVET	
41	154324	1	REFUERZO	REINFORCEMENT	RENFORT	2'5 C
	205078	1	REFUERZO	REINFORCEMENT	RENFORT	2500 C

142213

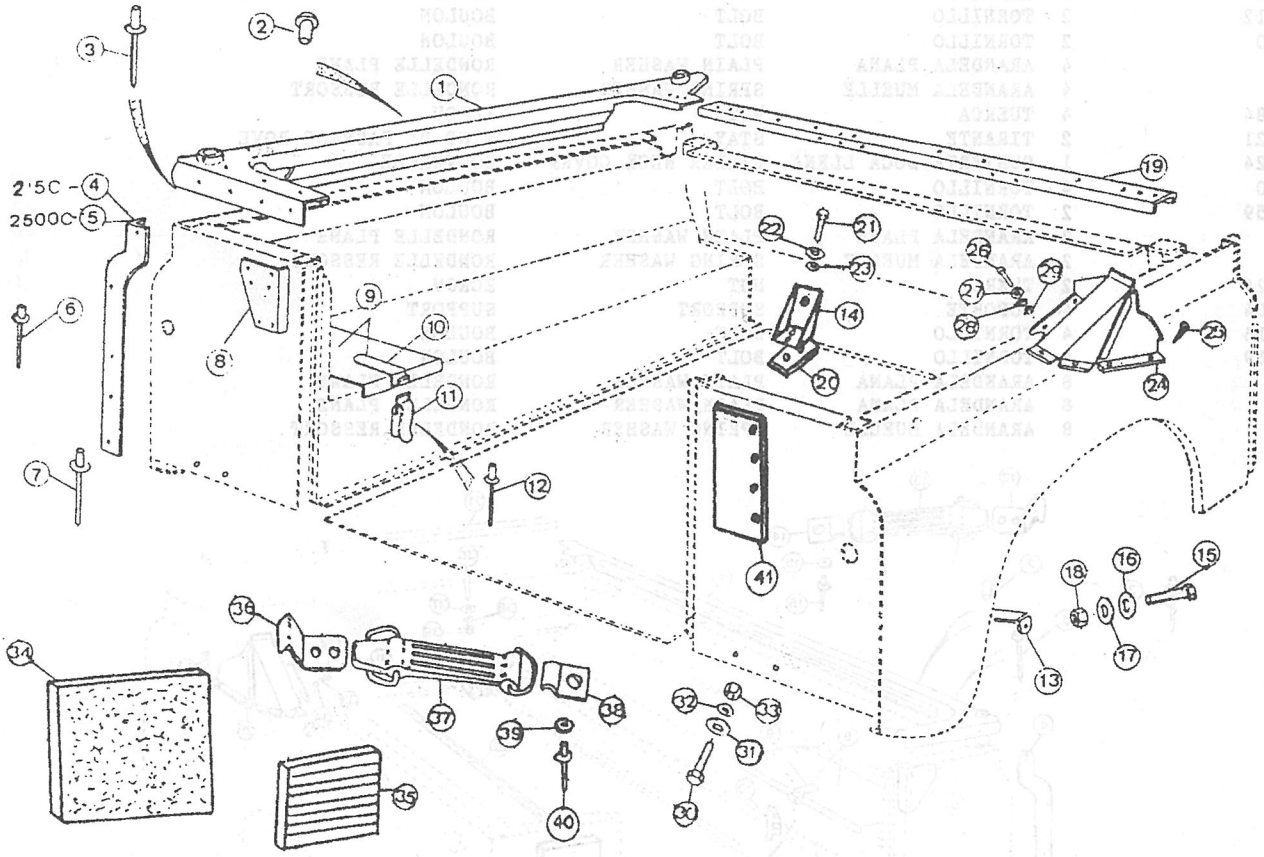

PUBLICACION N:790776 GRUPO=14 CARROCERIA SUBGRUPO=REMATES DE CAJA
EDICION N: 1 GROUP=14 BODY SUBGROUP=REAR BODY CAPPING
GROUPE=14 CARROSSERIE SUBGROUPE=COUVRE JOINT

N.FIG PLATE N.FIG	N.PIEZA PARTNUMBER N.PIECE	CAN QTY OUT	DENOMINACION	DESCRIPTION	DENOMINATION	OBSERVACIONES
1	738297	1	REMATE SUPERIOR L/D	TOP CAPPING RH	FLANC DE CAISE CD	
	738298	1	REMATE SUPERIOR L/I	TOP CAPPING LH	FLANC DE CAISE CG	
2	300784	36	REMACHE	RIVET	RIVET	
3	78248	32	REMACHE	RIVET	RIVET	
4	730486	1	REFUERZO L/D	REINFORCEMENT RH	RENFORT CD	
	730487	1	REFUERZO L/I	REINFORCEMENT LH	RENFORT CG	
5	78410	12	REMACHE	RIVET	RIVET	
6	730473	1	REMATE ESQUINA L/D	REAR CORNER BRACK RH	CHAPE DE COIN CD	
	730474	1	REMATE ESQUINA L/I	REAR CORNER BRACK LH	CHAPE DE COIN CG	
7	166707	1	PLACA DE GOMA	RUBBER PLATE	PLAQUE DE CAOUTCHOUC	
8	304401K1	1	TAPA DE COFRE	SPARE WHELL HO COVER	COUVERCLE DE COFFRET	
9	201843	1	CIERRE DE TAPA COFRE	HOOK FOR OVERCENTRE	FERMOIR DE COUVERCLE	
10	201841	1	CIERRE DE PRESION	OVERCENTRE CATCH	FERMOIR DE PRESSION	
11	202045	1	PLACA DE GOMA	RUBBER PLATE	PLAQUE DE CAOUTCHOUC	
12	202044	1	CHAPA FIJACION	FIXING PLATE	PLAQUE DE FIXATION	
13	153699	1	TIRANTE DE GOMA	RUBBER STAY	ENTRETOISE CAOUTCHOU	
14	153976	1	CLIP	CLIP	CLIP	
15	3816	1	ARANDELA PLANA	PLAIN WASHER	RONDELLE PLANE	
16	78248	3	REMACHE	RIVET	RIVET	
17	182120	10	TORNILLO	BOLT	BOULON	
18	3830	10	ARANDELA PLANA	PLAIN WASHER	RONDELLE PLANE	
19	054760	10	ARANDELA ESTRELLA	STAR WASHER	RONDELLE D'ETOILE	
20	181185	10	TUERCA	NUT	ECROU	
21	738299	1	REMATE SUPERIOR DELA	FRONT TOP CAPPING	FLANC DE CAISE AVANT	
22	330615	4	PERFIL	ANGLE	PROFIL	
23	78248	32	REMACHE	RIVET	RIVET	
24	182112	2	TORNILLO	BOLT	BOULON	
	78210	2	TORNILLO	BOLT	BOULON	
25	3840	4	ARANDELA PLANA	PLAIN WASHER	RONDELLE PLANE	
26	3074	4	ARANDELA MUELLE	SPRING WASHER	RONDELLE RESSORT	
27	181184	4	TUERCA	NUT	ECROU	
28	332521	2	TIRANTE	STAY	TIGE DE PASSAGE ROVE	
29	167424	1	CUBIERTA BOCA LLENA.	FILLER NECK COVER	COUVERCLE	
30	78140	4	TORNILLO	BOLT	BOULON	
31	250959	2	TORNILLO	BOLT	BOULON	
32	3816	2	ARANDELA PLANA	PLAIN WASHER	RONDELLE PLANE	
33	3073	2	ARANDELA MUELLE	SPRING WASHER	RONDELLE RESSORT	
34	180124	2	TUERCA	NUT	ECROU	
35	159804	4	SOPORTE	SUPPORT	SUPPORT	
36	182113	4	TORNILLO	BOLT	BOULON	
	255209	4	TORNILLO	BOLT	BOULON	
37	3840	8	ARANDELA PLANA	PLAIN WASHER	RONDELLE PLANE	
	3900	8	ARANDELA PLANA	PLAIN WASHER	RONDELLE PLANE	
38	3074	8	ARANDELA MUELLE	SPRING WASHER	RONDELLE RESSORT	

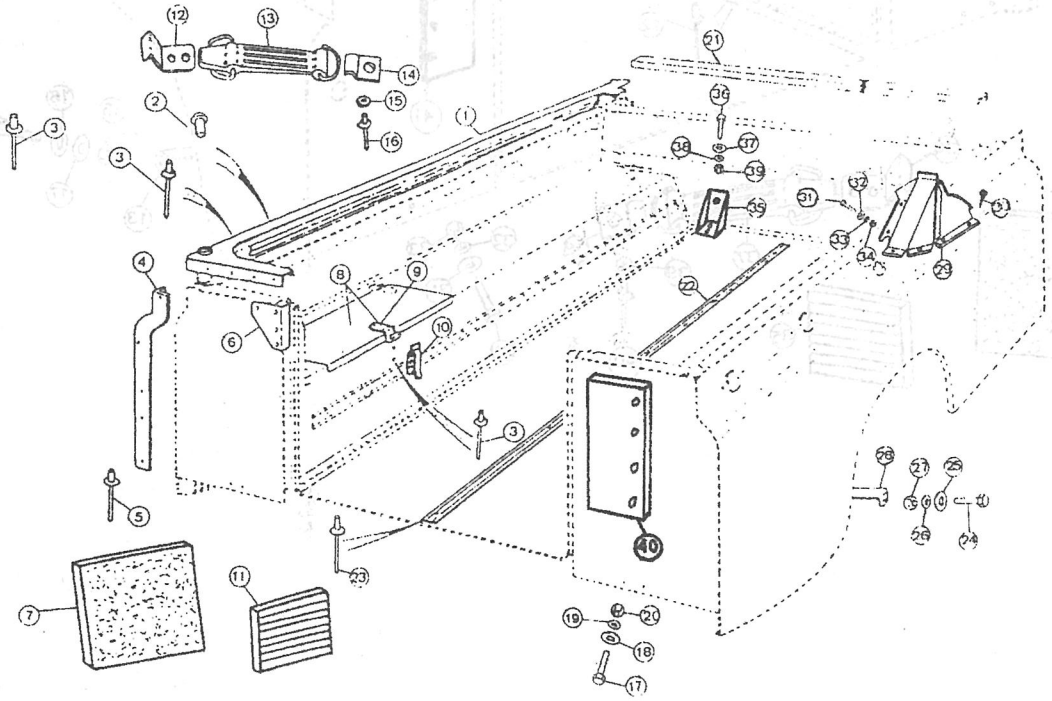

PUBLICACION N:790776
EDICION N: 1

GRUPO=14 CARROCERIA
GROUP=14 BODY
GROUPE=14 CARROSSERIE

SUBGRUPO=REMATES DE CAJA
SUBGROUP=REAR BODY CAPPING
SUBGROUPE=COUVRE JOINT

N.FIG PLATE N.FIG	N.PIEZA PARTNUMBER N.PIECE	CAN QTY OUT	DENOMINACION	DESCRIPTION	DENOMINATION	OBSERVACIONES
39	181184	8	TUERCA	NUT	ECROU	
40	205078	1	REFUERZO	REINFORCEMENT	RENFORT	

142214

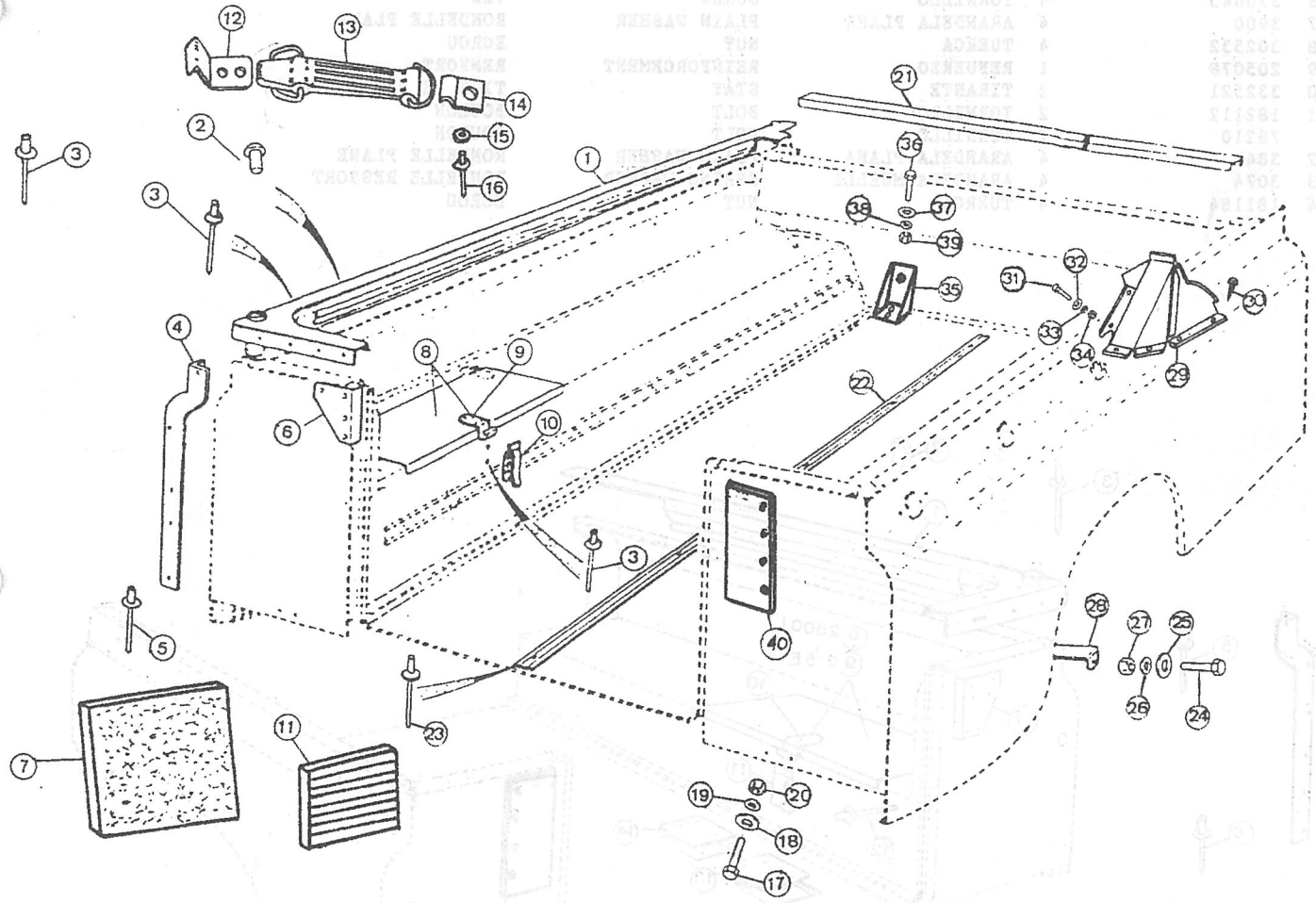

PUBLICACION N:790776 GRUPO=14 CARROCERIA SUBGRUPO=REMATES DE CAJA
EDICION N: 1 GROUP=14 BODY SUBGROUP=REAR BODY CAPPING
GROUPE=14 CARROSSERIE SUBGROUPE=COUVRE JOINT

N.FIG PLATE N.FIG	N.PIEZA PARTNUMBER N.PIECE	CAN QTY OUT	DENOMINACION	DESCRIPTION	DENOMINATION	OBSERVACIONES
1	737910	1	REMATE SUPERIOR L/I	TOP CAPPING LH	FLANC DE CAISE CG	
	737911	1	REMATE SUPERIOR L/D	TOP CAPPING RH	FLANC DE CAISE CD	
2	300789	18	REMACHE	RIVET	RIVET	
3	78248	8	REMACHE POP	RIVET POP	RIVET POP	
4	730486	1	REFUERZO L/D	REINFORCEMENT RH	RENFORT CD	
	730487	1	REFUERZO L/I	REINFORCEMENT LH	RENFORT CG	
5	78248	22	REMACHE	RIVET	RIVET	
6	78410	2	REMACHE	RIVET	RIVET	
7	730473	1	REMATE ESQUINA L/D	REAR CORNER BRACK RH	CHAPE DE COIN CD	
	730474	1	REMATE ESQUINA L/I	REAR CORNER BRACK LH	CHAPE DE COIN CG	
8	737926	1	TAPA DE COFRE	SPARE WHELL HO COVER	COUVERCLE DE COFFRET	2500 L
9	304401K1	1	TAPA DE COFRE	SPARE WHELL HO COVER	COUVERCLE DE COFFRET	2'5 E
10	201843	1	CIERRE DE TAPA COFRE	HOOK FOR OVERCENTRE	FERMOIR DE COUVERCE	
11	201841	1	CIERRE DE PRESION	OVERCENTRE CATCH	FERMOIR DE PRESSION	
12	78248	2	REMACHE	RIVET	RIVET	
13	333202	1	TAPA DE PISO	COVER PLATE OF FLOOR	COUVERCLE DE PLANCHE	
14	333201	1	TAPA DE PISO	COVER PLATE OF FLOOR	COUVERCLE DE PLANCHE	
15	78248	4	REMACHE	RIVET	RIVET	
16	320045	4	TORNILLO	SCREW	VIS	
17	3900	4	ARANDELA PLANA	PLAIN WASHER	RONDELLE PLANE	
18	302532	4	TUERCA	NUT	ECROU	
19	205078	1	REFUERZO	REINFORCEMENT	RENFORT	
20	332521	2	TIRANTE	STAY	TIGE DE PASSAGE ROVE	
21	182112	2	TORNILLO	BOLT	BOULON	
	78210	2	TORNILLO	BOLT	BOULON	
22	3840	4	ARANDELA PLANA	PLAIN WASHER	RONDELLE PLANE	
23	3074	4	ARANDELA MUELLE	SPRING WASHER	RONDELLE RESSORT	
24	181184	4	TUERCA	NUT	ECROU	

142215

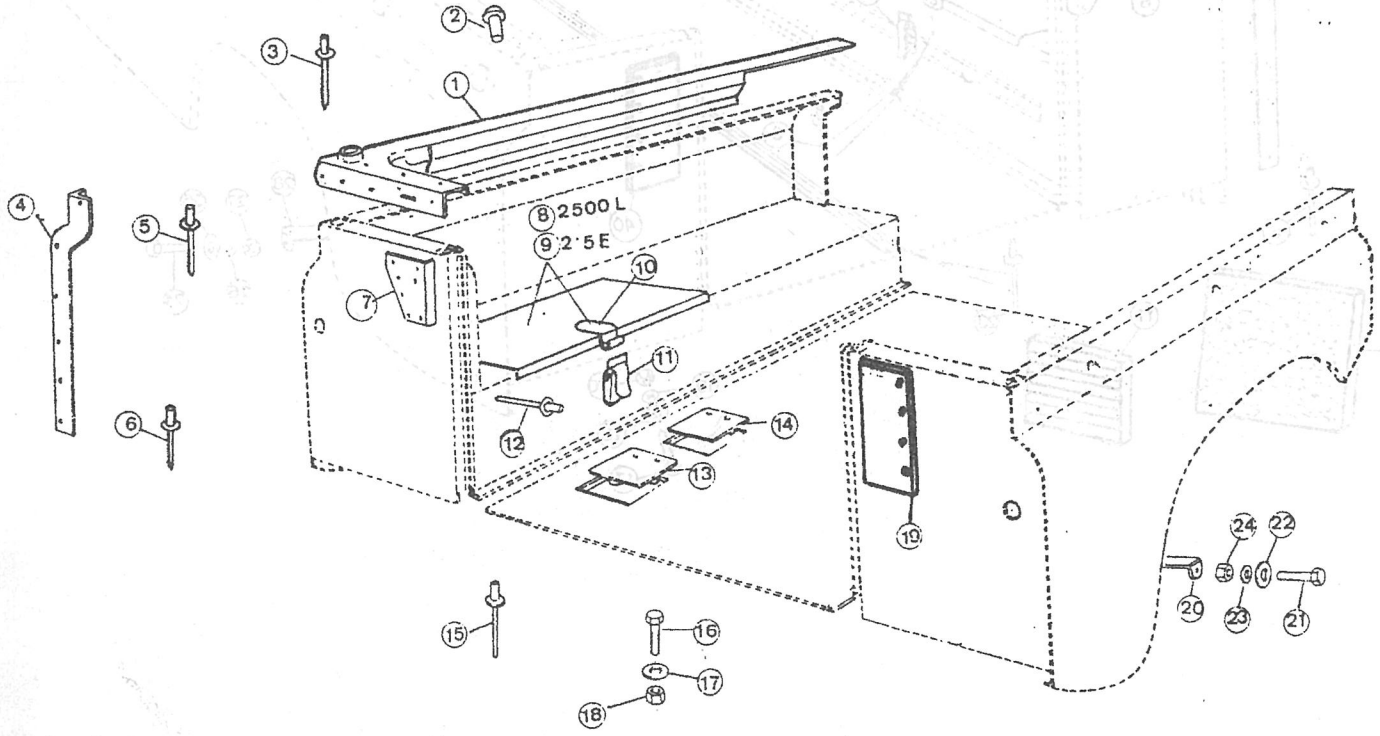

PUBLICACION N:790776 GRUPO=14 CARROCERIA SUBGRUPO=LATERAL DE CAJA
EDICION N: 1 GROUP=14 BODY SUBGROUP=BOX SIDE
GROUPE=14 CARROSSERIE SUBGROUPE=LATERAL BOITE

N.FIG PLATE N.FIG	N.PIEZA PARTNUMBER N.PIECE	CAN QTY OUT	DENOMINACION	DESCRIPTION	DENOMINATION	OBSERVACIONES
1	207760	1	CONJ.LATERAL L/D	SIDE ASSY RH	ENS LATERAL CD	
	207761	1	CONJ.LATERAL L/I	SIDE ASSY LH	ENS LATERAL CG	
2	207832	1	PANEL LATERAL L/D	PANEL RH	PANNEAU CD	
	207833	1	PANEL L/I	PANEL LH	PANNEAU CG	
3	201758	2	JUNTA	JOINT	JOINT	
4	201759	1	JUNTA SUPERIOR	UPPER JOINT	JOINT SUPERIEUR	
	201761	1	JUNTA INFERIOR	LOWER JOINT	JOINT INFERIEUR	
5	150957	2	GOMA	RUBBER	CAOUTCHOUC	
6	150958	2	GOMA	RUBBER	CAOUTCHOUC	
7	150956	2	CRISTAL	GLAS	GLACE	
8	182103	2	TORNILLO	SCREW	VIS	
9	3830	4	ARANDELA	WASHER	RONDELLE	
10	WM108001	2	ARANDELA	WASHER	RONDELLE	
11	181185	2	TUERCA	NUT	ECROU	
12	255209	4	TORNILLO	BOLT	BOULON	
13	3900	8	ARANDELA PLANA	PLAIN WASHER	RONDELLE PLANE	
14	3074	4	ARANDELA	WASHER	RONDELLE	
15	181184	4	TUERCA	NUT	ECROU	
16	182135	2	TORNILLO	SCREW	VIS	
17	3898	2	ARANDELA	WASHER	RONDELLE	
18	185258	2	DISTANCIADOR	SPACER	ENTRETOISE	
19	WM108001	2	ARANDELA MUELLE	SPRING WASHER	RONDELLE RESSORT	
20	181185	2	TUERCA	NUT	ECROU	
21	182113	2	TORNILLO	SCREW	VIS	
22	3900	4	ARANDELA	WASHER	RONDELLE	
23	3074	2	ARANDELA MUELLE	SPRING WASHER	RONDELLE RESSORT	
24	181184	2	TUERCA	NUT	ECROU	
25	338554K1	2	PLACA	PLATE	PLAQUE	
26	332081	2	PLACA CON TUERCAS	PLATE WITH NUTS	PLAQUE AVEC ECROUS	
27	182116	4	TORNILLO	BOLT	BOULON	
28	2215	4	ARANDELA PLANA	PLAIN WASHER	RONDELLE PLANE	
29	WM108001	4	ARANDELA	WASHER	RONDELLE	
30	185145	2	TORNILLO	SCREW	VIS	
31	3898	2	ARANDELA	WASHER	RONDELLE	
32	185258	2	DISTANCIADOR	SPACER	ENTRETOISE	
33	WM108001	2	ARANDELA MUELLE	SPRING WASHER	RONDELLE RESSORT	
34	181185	2	TUERCA	NUT	ECROU	
35	332052F1	2	PLACA	PLATE	PLAQUE	

142400

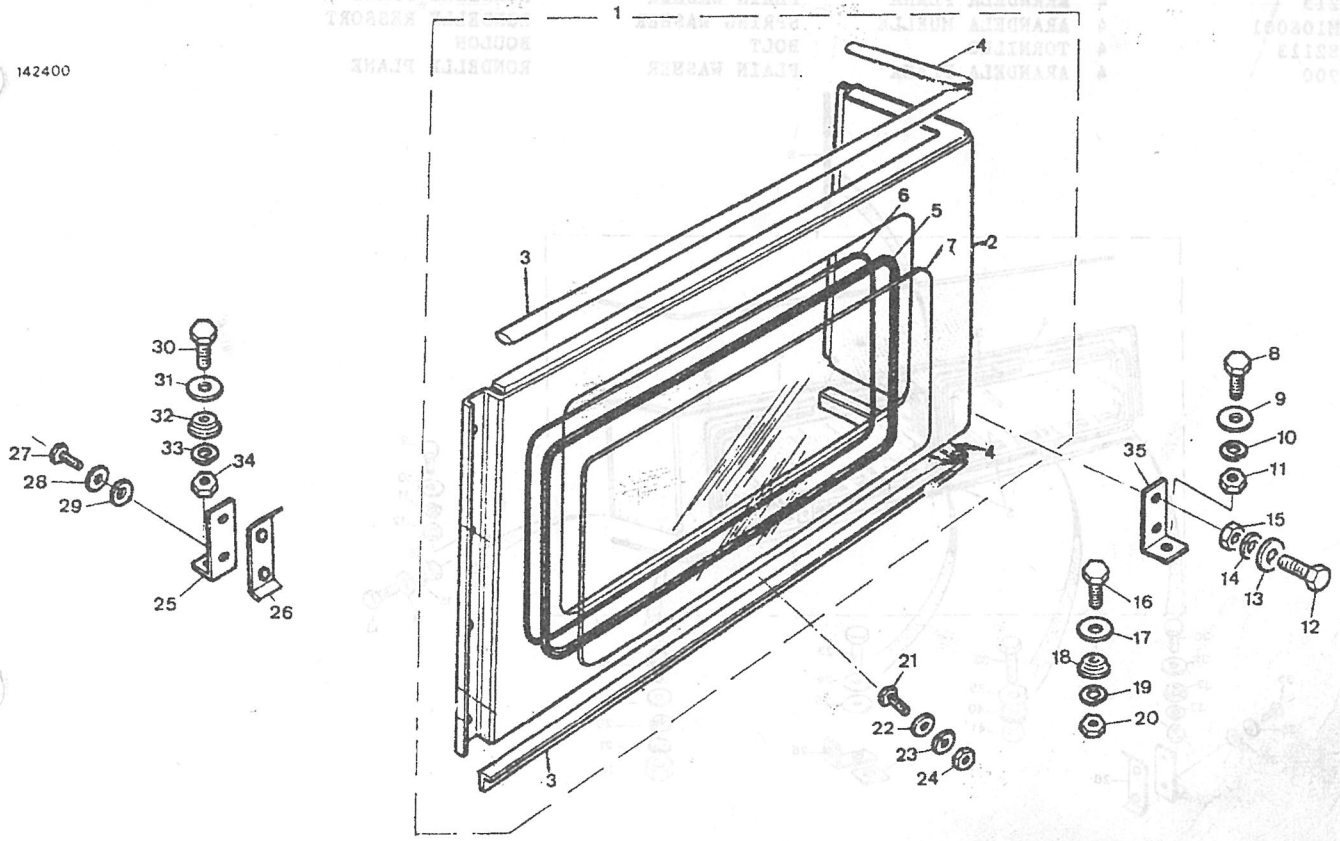

PUBLICACION N:790776 GRUPO=14 CARROCERIA SUBGRUPO=LATERAL DE CAJA
EDICION N: 1 GROUP=14 BODY SUBGROUP=BOX SIDE
GROUPE=14 CARROSSERIE SUBGROUPE=LATERAL BOITE

N.FIG PLATE N.FIG	N.PIEZA PARTNUMBER N.PIECE	CAN QTY OUT	DENOMINACION	DESCRIPTION	DENOMINATION	OBSERVACIONES
1	207703	1	CONJ COMP LATERAL LI	SIDE ASSY L H	ENS LATERAL C G	
	207704	1	CONJ COMP LATERAL LD	SIDE ASSY R H	ENS LATERAL C D	
2	207834	1	CONJ PANEL LAT L D	PANEL R H	PANNEAU C D	
	207835	1	CONJ PANEL LAT L I	PANEL L H	PANNEAU C G	
	453-V-245	1	PANEL LATERAL L/D	SIDE PANEL RH	PANNEAU LATERAL CD	DOBLE PTA.TRASER
	453-V-246	1	PANEL LATERAL L/I	SIDE PANEL LH	PANNEAU LATERAL CG	DOBLE PTA.TRASER
3	150958	4	TIRA RELLENO PERF	SEAL	CAOUTCHOUC	
4	150957	4	PERFIL DE GOMA	RUBBER	CAOUTCHOUC	
5	150956	4	CRISTAL	GLASS	GLACE	
6	201760	2	GOMA	RUBBER	CAOUTCHOUC	
7	201759	1	GOMA SUPERIOR	UPPER RUBBER	CAOUTCHOUC SUPERIEUR	
	201761	1	GOMA INFERIOR	LOWER RUBBER	CAOUTCHOUC INFERIEUR	
8	333401	2	TIRA PROTECCION	RUBBER	CAOUTCHOUC	
9	182103	2	TORNILLO	BOLT	BOULON	
10	3830	4	ARANDELA PLANA	WASHER	RONDELLE	
11	WM108001	2	ARANDELA MUELLE	SPRING WASHER	RONDELLE RESSORT	
12	181185	2	TUERCA	NUT	ECROU	
13	255209	4	TORNILLO	BOLT	BOULON	
14	3900	8	ARANDELA PLANA	PLAIN WASHER	RONDELLE PLANE	
15	3074	4	ARANDELA MUELLE	SPRING WASHER	RONDELLE RESSORT	
16	181184	4	TUERCA	NUT	ECROU	
17	332052F1	2	PLACA	PLATE	PLAQUE	
18	182135	2	TORNILLO	BOLT	BOULON	
19	3898	2	ARANDELA PLANA	PLAIN WASHER	RONDELLE PLANE	
20	185258	2	DISTANCIADOR	SPACER	ENTRETOISE	
21	054760	2	ARANDELA ESTRELLA	STAR WASHER	RONDELLE	
22	181185	2	TUERCA	NUT	ECROU	
23	256001	4	TORNILLO	BOLT	BOULON	
24	3900	4	ARANDELA PLANA	WASHER	RONDELLE	
25	4067	4	ARANDELA SUPLEMENTO	SHIM	SUPPLEMENT	
26	330830	4	PLACA CON TUERCAS	PLATE WITH NUTS	PLAQUE AVEC ECROU	
27	151023	S-N	SUPLEMENTO	SHIM	SUPPLEMENT	
28	332081	2	PLACA CON TUERCAS	PLATE WITH NUTS	PLAQUE AVEC ECROU	
29	338554K1	2	PLACA	PLATE	PLQUE	
30	185145	2	TORNILLO	BOLT	BOULON	
31	3898	2	ARANDELA	WASHERLE	RONDELLE	
32	185258	2	DISTANCIADOR	SPACER	ENTRETOISE	
33	054760	2	ARANDELA ESTRELLA	STAR WASHER	RONDELLE	
34	181185	2	TUERCA	NUT	ECROU	
35	182116	4	TORNILLO	BOLT	BOULON	
36	2215	4	ARANDELA PLANA	PLAIN WASHER	RONDELLE PLANE	
37	WM108001	4	ARANDELA MUELLE	SPRING WASHER	RONDELLE RESSORT	
38	182113	4	TORNILLO	BOLT	BOULON	
39	3900	4	ARANDELA PLANA	PLAIN WASHER	RONDELLE PLANE	

142401

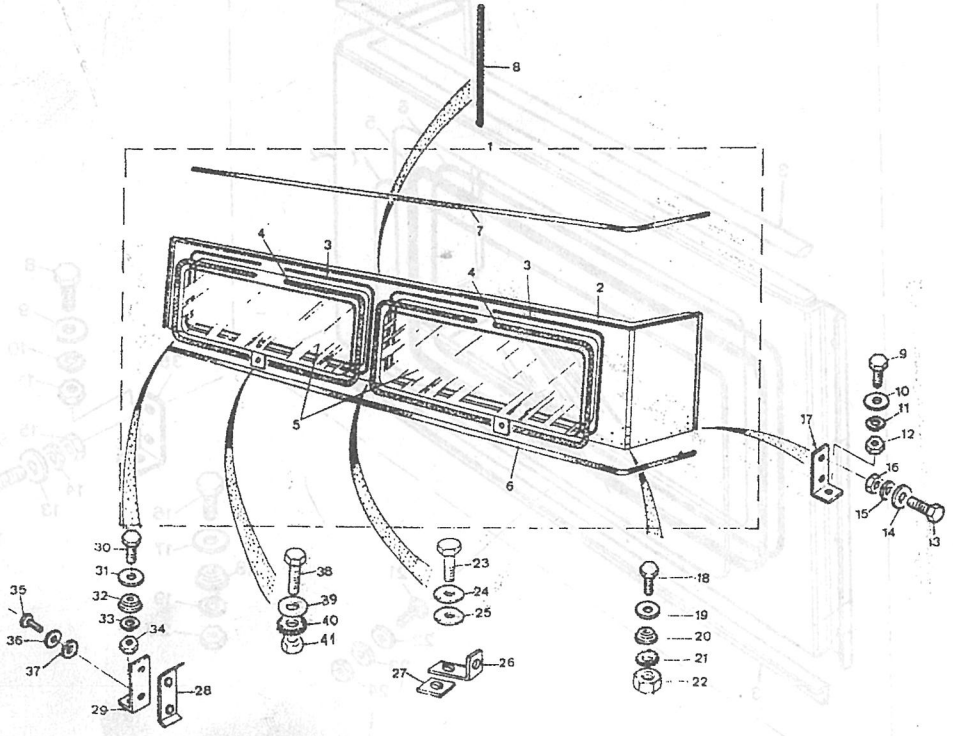

PUBLICACION N:790776 GRUPO-14 CARROCERIA SUBGRUPO-LATERAL DE CAJA
EDICION N: 1 GROUP-14 BODY SUBGROUP-BOX SIDE
GROUPE-14 CARROSSERIE SUBGROUPE-LATERAL BOITE

N.FIG PLATE N.FIG	N.PIEZA PARTNUMBER N.PIECE	CAN QTY OUT	DENOMINACION	DESCRIPTION	DENOMINATION	OBSERVACIONES
40	3074	4	ARANDELA MUELLE	SPRING WASHER	RONDELLE RESSORT	
41	181184	4	TUERCA	NUT	ECROU	

142401

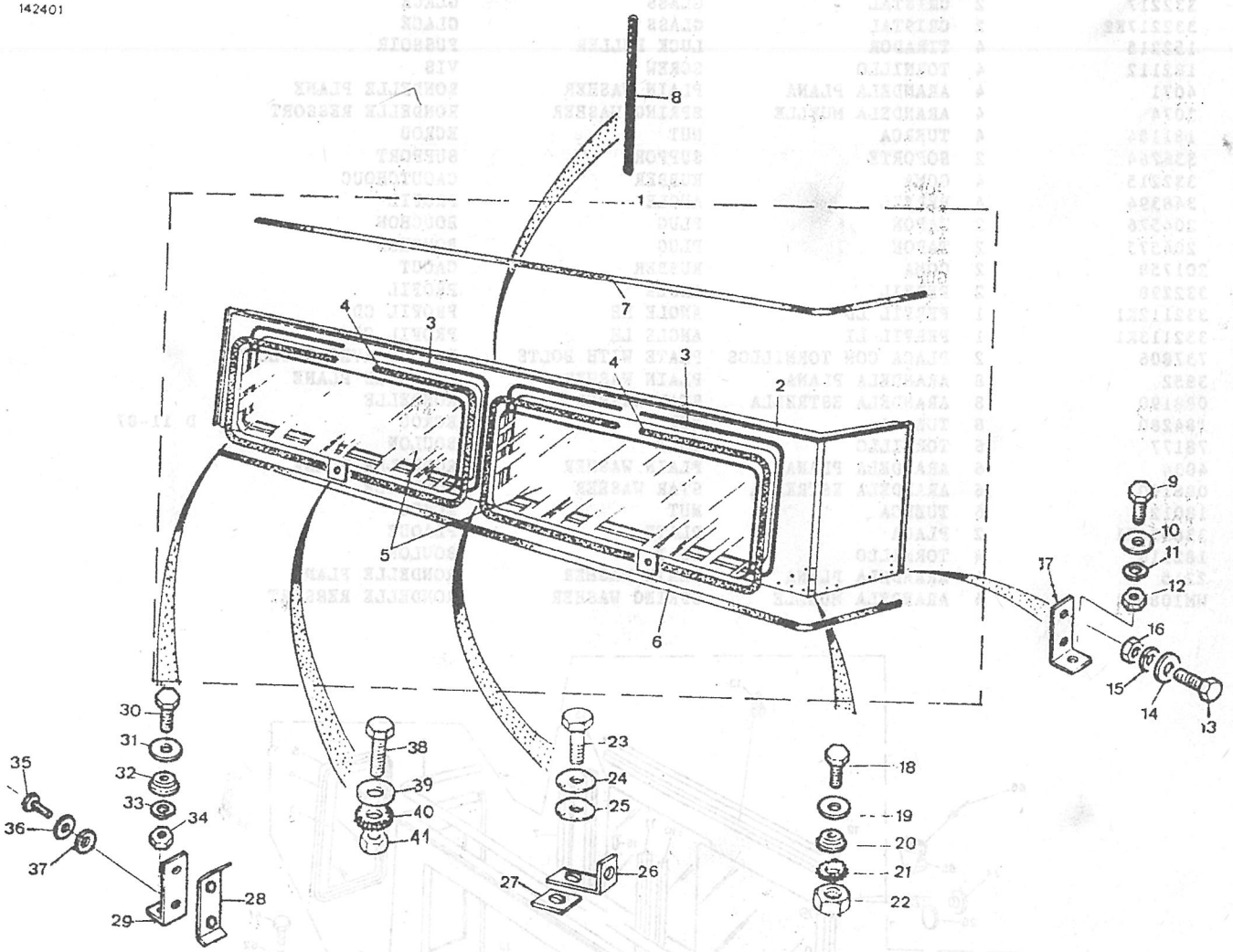

PUBLICACION N:790776 GRUPO=14 CARROCERIA SUBGRUPO=LATERAL DE CAJA
EDICION N: 1 GROUP=14 BODY SUBGROUP=BOX SIDE
GROUPE=14 CARROSSERIE SUBGROUPE=LATERAL BOITE

N.FIG PLATE N.FIG	N.PIEZA PARTNUMBER N.PIECE	CAN QTY OUT	DENOMINACION	DESCRIPTION	DENOMINATION	OBSERVACIONES
1	332306K3	1	CONJ.LATERAL L/D	SIDE ASSY RH	ENS LATERAL CD	
	332307K3	1	CONJ.LATERAL L/I	SIDE ASSY LH	ENS LATERAL CG	
2	208531	1	PANEL LATERAL L/I	PANEL LH	PANNEAU CG	
	208532	1	PANEL LATERAL L/D	PANEL RH	PANNEAU CD	
3	201283	2	CRISTAL	GLASS	GLACE	
4	201267	2	JUNTA	JOINT	JOINT	
5	201266	2	JUNTA	JOINT	JOINT	
6	201759	1	JUNTA SUPERIOR	UPPER JOINT	JOINT SUPERIEUR	
	201761	1	JUNTA INFERIOR	LOWER JOINT	JOINT INFERIEUR	
7	332239	2	PERFIL	ANGLE	PROFIL	
8	336454	4	PERFIL	ANGLE	PROFIL	
9	348396	4	PERFIL	ANGLE	PROFIL	
10	330661	2	PERFIL	ANGLE	PROFIL	
11	332230	2	GOMA	RUBBER	CAOUTCHOUC	
12	332216	4	GOMA	RUBBER	CAOUTCHOUC	
13	77707	32	TORNILLO	BOLT	BOULON	
14	332217	2	CRISTAL	GLASS	GLACE	
15	332217E2	2	CRISTAL	GLASS	GLACE	
16	152215	4	TIRADOR	LUCK PULLER	PUSSOIR	
17	182112	4	TORNILLO	SCREW	VIS	
18	4071	4	ARANDELA PLANA	PLAIN WASHER	RONDELLE PLANE	
19	3074	4	ARANDELA MUELLE	SPRING WASHER	RONDELLE RESSORT	
20	181184	4	TUERCA	NUT	ECROU	
21	336764	2	SOPORTE	SUPPORT	SUPPORT	
22	332215	4	GOMA	RUBBER	CAOUTCHOUC	
23	348394	4	PERFIL	ANGLE	PROFIL	
24	204576	2	TAPON	PLUG	BOUCHON	
25	204575	2	TAPON	PLUG	BOUCHON	
26	201758	2	GOMA	RUBBER	CAOUT	
27	332298	2	PERFIL	ANGLE	PROFIL	
28	332112K1	1	PERFIL LD	ANGLE RH	PROFIL CD	
	332113K1	1	PERFIL LI	ANGLE LH	PROFIL CG	
29	737806	2	PLACA CON TORNILLOS	PLATE WITH BOLTS	PLAQUE AVEC BOULONS	
30	3852	8	ARANDELA PLANA	PLAIN WASHER	RONDELLE PLANE	
31	088190	8	ARANDELA ESTRELLA	STAR WASHER	RONDELLE	
32	184280	8	TUERCA	NUT	ECROU	D 11-87
33	78177	6	TORNILLO	BOLT	BOULON	
34	4034	6	ARANDELA PLANA	PLAIN WASHER	RONDELLE PLANE	
35	088190	6	ARANDELA ESTRELLA	STAR WASHER	RONDELLE	
36	180124	6	TUERCA	NUT	ECROU	
37	338554K1	2	PLACA	PLATE	PLAQUE	
38	182116	4	TORNILLO	BOLT	BOULON	
39	2215	4	ARANDELA PLANA	PLAIN WASHER	RONDELLE PLANE	
40	WM108001	4	ARANDELA MUELLE	SPRING WASHER	RONDELLE RESSORT	

142411

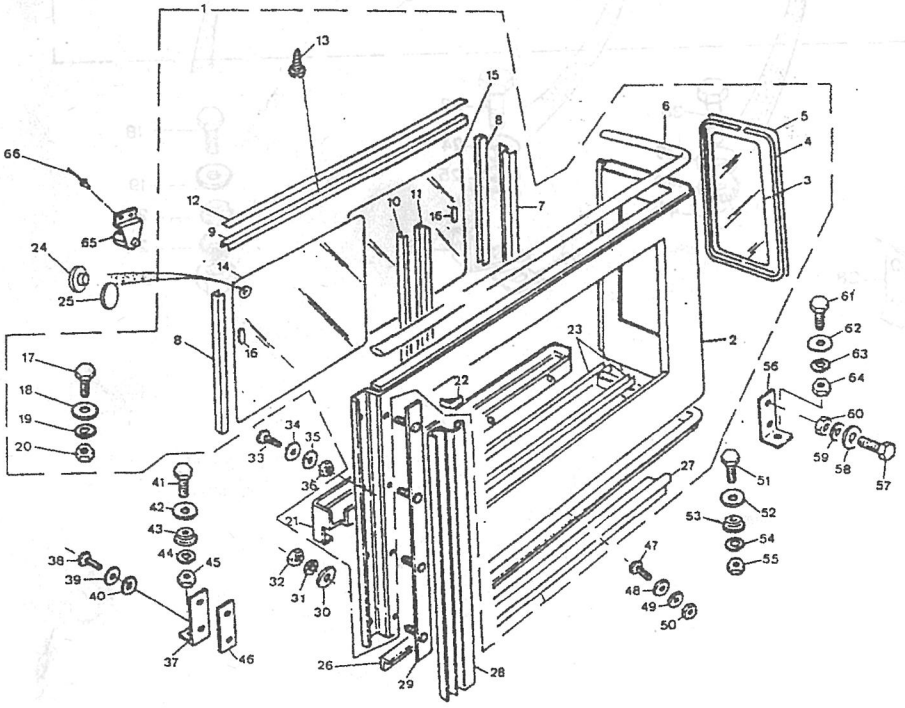

PUBLICACION N:790776 GRUPO=14 CARROCERIA SUBGRUPO=LATERAL DE CAJA
EDICION N: 1 GROUP=14 BODY SUBGROUP=BOX SIDE
GROUPE=14 CARROSSERIE SUBGROUPE=LATERAL BOITE

N.FIG PLATE N.FIG	N.PIEZA PARTNUMBER N.PIECE	CAN QTY OUT	DENOMINACION	DESCRIPTION	DENOMINATION	OBSERVACIONES
41	185145	2	TORNILLO	BOLT	BOULON	
42	3898	2	ARANDELA PLANA	PLAIN WASHER	RONDELLE PLANE	
43	185258	2	DISTANCIADOR	SPACER	ENTRETOISE	
44	054760	2	ARANDELA ESTRELLA	STAR WASHER	RONDELLE	
45	181185	2	TUERCA	NUT	ECROU	
46	332081	2	PLACA CON TUERCAS	PLATE WITH NUTS	PLAQUE AVEC ECROUS	
47	182113	2	TORNILLO	SCREW	VIS	
48	3900	4	ARANDELA PLANA	PLAIN WASHER	RONDELLE PLANE	
49	3074	2	ARANDELA MUELLE	SPRING WASHER	RONDELLE RESSORT	
50	181184	2	TUERCA	NUT	ECROU	
51	182135	2	TORNILLO	SCREW	VIS	
52	3898	2	ARANDELA PLANA	PLAIN WASHER	RONDELLE PLANE	
53	185258	2	DISTANCIADOR	SPACER	ENTRETOISE	
54	054760	2	ARANDELA ESTRELLA	STAR WASHER	RONDELLE	
55	181185	2	TUERCA	NUT	ECROU	
56	332052F1	2	PLACA	PLATE	PLAQUE	
57	255209	4	TORNILLO	BOLT	BOULON	
58	3900	8	ARANDELA PLANA	PLAIN WASHER	RONDELLE PLANE	
59	3074	4	ARANDELA MUELLE	SPRING WASHER	RONDELLE RESSORT	
60	181184	4	TUERCA	NUT	ECROU	
61	182103	2	TORNILLO	SCREW	VIS	
62	3830	4	ARANDELA PLANA	PLAIN WASHER	RONDELLE PLANE	
63	WM108001	2	ARANDELA MUELLE	SPRING WASHER	RONDELLE RESSORT	
64	181185	2	TUERCA	NUT	ECROU	
65	153227	2	SEGURO TRASERO	REAR LOCK	ASSURANCE ARRIERE	
	158614	2	SEGURO DELANTERO	FRONT LOCK	ASSURANCE AVANT	
66	78248	8	REMACHE	RIVET	RIVET	

142411

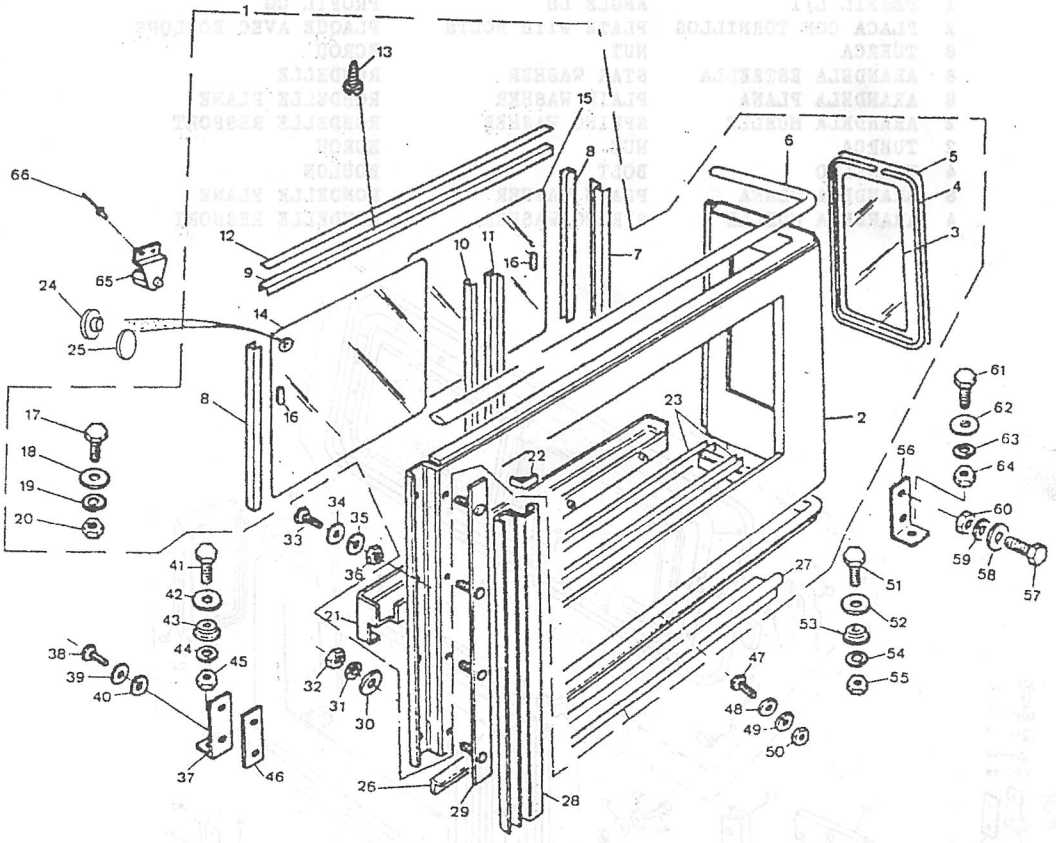

PUBLICACION N:790776 GRUPO=14 CARROCERIA SUBGRUPO=LATERAL DE CAJA
EDICION N: 1 GROUP=14 BODY SUBGROUP=BOX SIDE
GROUPE=14 CARROSSERIE SUBGROUPE=LATERAL BOITE

N.FIG PLATE N.FIG	N.PIEZA PARTNUMBER N.PIECE	CAN QTY OUT	DENOMINACION	DESCRIPTION	DENOMINATION	OBSERVACIONES
1	738212	1	CONJ.LATERAL L/I	SIDE ASSY LH	ENS LATERAL CG	2500 L
	738213	1	CONJ.LATERAL L/D	SIDE ASSY RH	ENS LATERAL CD	2500 L
	738214	1	CONJ.LATERAL L/I	SIDE ASSY LH	ENS LATERAL CG	2500 C
	738215	1	CONJ.LATERAL L/D	SIDE ASSY RH	ENS LATERAL CD	2500 C
2	MUC3766K1	1	CONJ.VENTANA L/D	WINDOW ASSY RH	ENSEMBLE FENETRE CD	
	MUC3767K1	1	CONJ.VENTANA L/I	WINDOW ASSY LH	ENSEMBLE FENETRE CG	
3	790897	1	SEGURO L/D	LOCK RH	ASSURANCE CD	
	790898	1	SEGURO L/I	LOCK LH	ASSURANCE CG	
4	790899	2	TORNILLO	BOLT	BOULON	
5	790900	2	TAPA	COVER	COUVERCLE	
6	790901	2	TORNILLO	BOLT	BOULON	
7	790902	2	SEPARADOR	SPACER	ENTRETOISE	
8	790903	1	MARCO VENTANA L/I	WINDOW FRAME LH	CADRE FENETRE CG	
	790904	1	MARCO VENTANA L/D	WINDOW FRAME RH	CADRE FENETRE CD	
9	790905	2	CRISTAL FIJO	FIX WINDOW	VITRE FIXE	
10	790906	2	CRISTAL MOVIL	MOBILE WINDOW	VITRE MOBILE	
11	790907	2	TOPE CRISTAL	WINDOW STOPPER	ARRETOIR VITRE	
12	790908	2	PERFIL VERTICAL	VERTICAL PROFILE	PROFIL VERTICAL	
13	790909	2	JUNTA VERTICAL	VERTICAL GASKET	JOINT VERTICALE	
14	790910	2	JUNTA HORIZONTAL	HORIZONTAL GASKET	JOINT HORIZONTAL	
	790911	1	PERFIL L/D	PROFILE RH	PROFIL CD	
	790912	1	PERFIL L/I	PROFILE LH	PROFIL CG	
15	790913	2	PERFIL	PROFILE	PROFIL	
16	730683	2	GOMA	RUBBER	CAOUTCHOUC	
17	332215	2	GOMA	RUBBER	CAOUTCHOUC	
18	201758	2	GOMA	RUBBER	CAOUTCHOUC	
19	201759	2	GOMA	RUBBER	CAOUTCHOUC	
20	333487	2	GOMA	RUBBER	CAOUTCHOUC	
21	201283	2	CRISTAL	GLASS	GLACE	
22	201267	2	GOMA	RUBBER	CAOUTCHOUC	
23	201266	2	GOMA	RUBBER	CAOUTCHOUC	
24	205941	12	PERFIL	PROFILE	PROFIL	
25	MUC4542	4	PERFIL	PROFILE	PROFIL	
26	332112K1	1	PERFIL L/D	ANGLE RH	PROFIL CD	
	332113K1	1	PERFIL L/I	ANGLE LH	PROFIL CG	
27	737806	2	PLACA CON TORNILLOS	PLATE WITH BOLTS	PLAQUE AVEC BOULONS	
28	184280	8	TUERCA	NUT	ECROU	
29	088190	8	ARANDELA ESTRELLA	STAR WASHER	RONDELLE	
30	3852	8	ARANDELA PLANA	PLAIN WASHER	RONDELLE PLANE	
31	WM108001	2	ARANDELA MUELLE	SPRING WASHER	RONDELLE RESSORT	
32	181185	2	TUERCA	NUT	ECROU	
33	255209	4	TORNILLO	BOLT	BOULON	
34	3900	8	ARANDELA PLANA	PLAIN WASHER	RONDELLE PLANE	
35	3074	4	ARANDELA MUELLE	SPRING WASHER	RONDELLE RESSORT	

142420

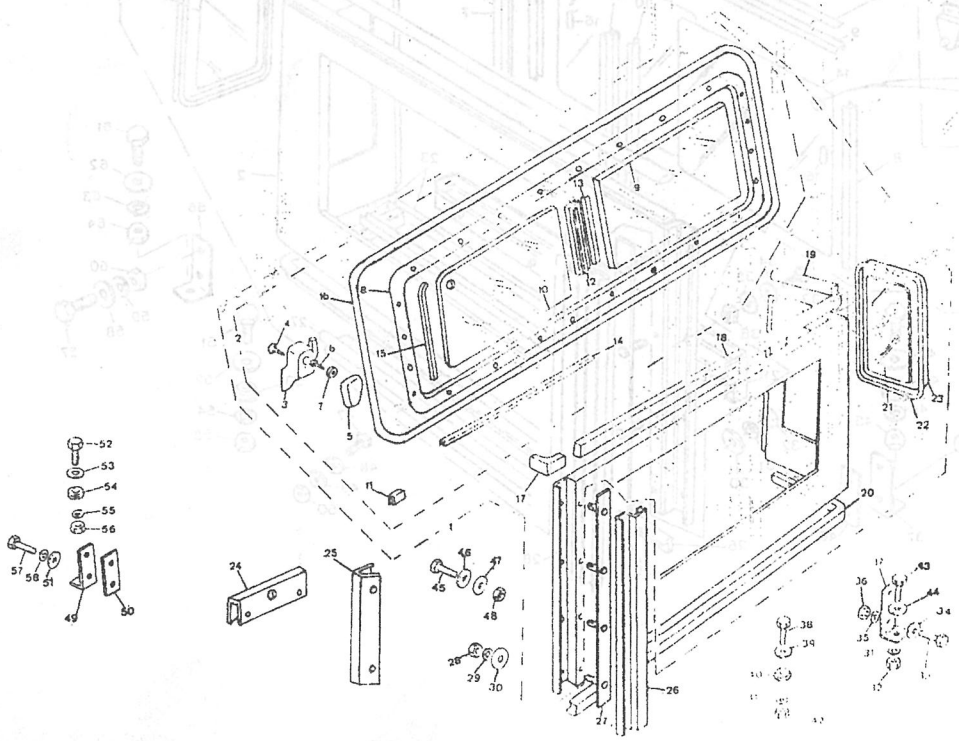

PUBLICACION N:790776 GRUPO=14 CARROCERIA SUBGRUPO=LATERAL DE CAJA
EDICION N: 1 GROUP=14 BODY SUBGROUP=BOX SIDE
GROUPE=14 CARROSSERIE SUBGROUPE=LATERAL BOITE

N.FIG PLATE N.FIG	N.PIEZA PARTNUMBER N.PIECE	CAN QTY OUT	DENOMINACION	DESCRIPTION	DENOMINATION	OBSERVACIONES
36	181184	4	TUERCA	NUT	ECROU	
37	332052F1	2	PLACA	PLATE	PLAQUE	
38	182135	2	TORNILLO	BOLT	BOULON	
39	3898	4	ARANDELA PLANA	PLAIN WASHER	RONDELLE PLANE	
40	185258	2	DISTANCIADOR	SPACER	ENTRETOISE	
41	054760	2	ARANDELA ESTRELLA	STAR WASHER	RONDELLE	
42	181185	2	TUERCA	NUT	ECROU	
43	182103	2	TORNILLO	BOLT	BOULON	
44	3830	4	ARANDELA PLANA	PLAIN WASHER	RONDELLE PLANE	
45	78177	6	TORNILLO	BOLT	BOULON	
46	4034	6	ARANDELA PLANA	PLAIN WASHER	RONDELLE PLANE	
47	088190	6	ARANDELA ESTRELLA	STAR WASHER	RONDELLE	
48	180124	6	TUERCA	NUT	ECROU	
49	338554K1	2	PLACA	PLATE	PLAQUE	
50	332081	2	PLACA CON TUERCAS	PLATE WITH NUTS	PLAQUE AVEC ECROUS	
51	WM108001	4	ARANDELA MUELLE	SPRING WASHER	RONDELLE RESSORT	
52	185145	2	TORNILLO	BOLT	BOULON	
53	3898	4	ARANDELA PLANA	PLAIN WASHER	RONDELLE PLANE	
54	185258	2	DISTANCIADOR	SPACER	ENTRETOISE	
55	054760	2	ARANDELA ESTRELLA	STAR WASHER	RONDELLE	
56	181185	2	TUERCA	NUT	ECROU	
57	182116	4	TORNILLO	BOLT	BOULON	
58	2215	4	ARANDELA PLANA	PLAIN WASHER	RONDELLE PLANE	

142420

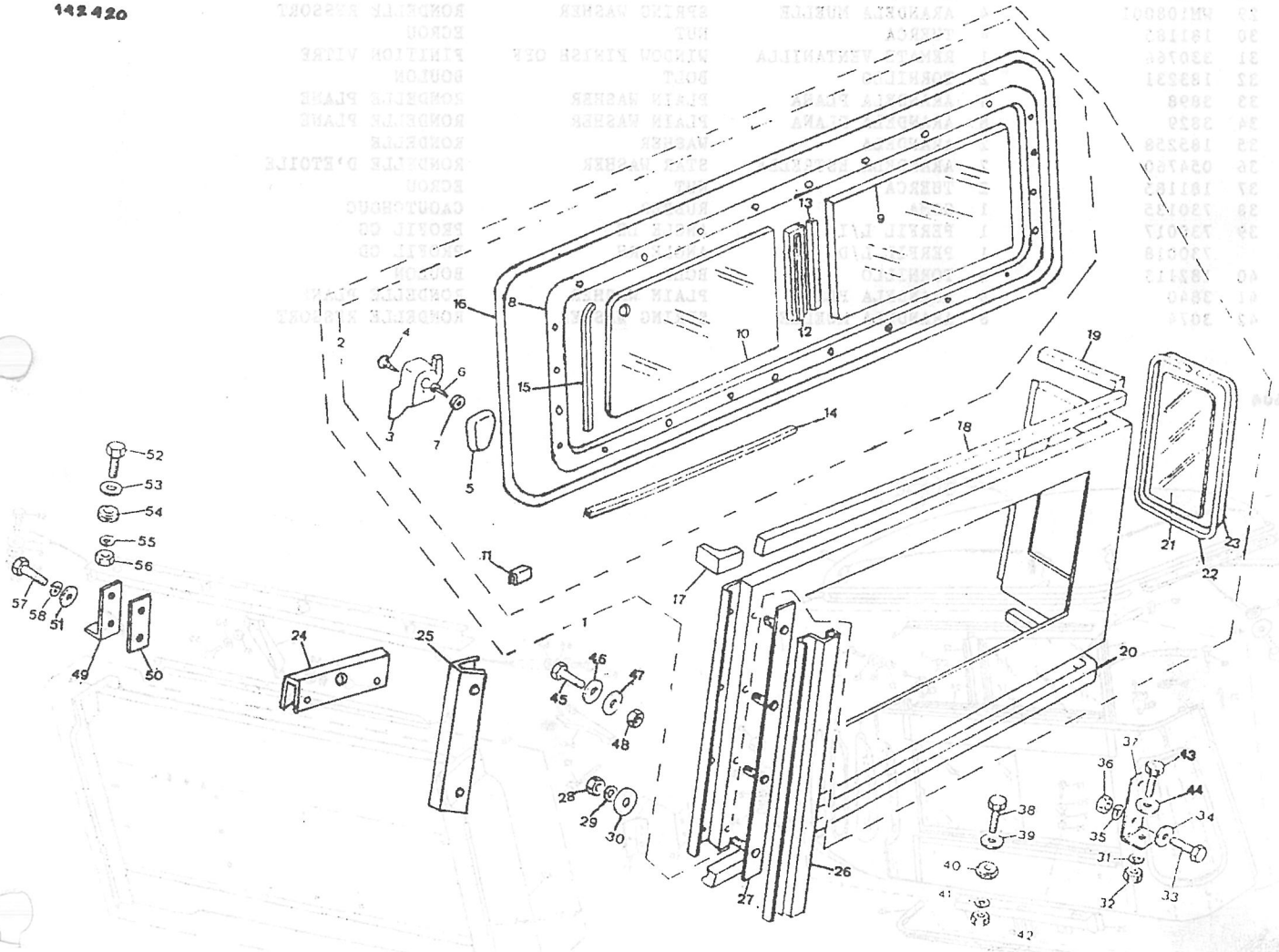

PUBLICACION N:790776 GRUPO=14 CARROCERIA SUBGRUPO=CABINA Y TECHO
EDICION N: 1 GROUP=14 BODY SUBGROUP=CAB AND TROPICAL ROD
GROUPE=14 CARROSSERIE SUBGROUPE=CABINE ET TOIT

N.FIG PLATE N.FIG	N.PIEZA PARTNUMBER N.PIECE	CAN QTY OUT	DENOMINACION	DESCRIPTION	DENOMINATION	OBSERVACIONES
1	330769K1	1	CONJ.TRASERO	REAR ASSY	ENS ARRIERE	
2	330791	2	GOMA	RUBBER	CAOUTCHOUC	
3	330790	2	GOMA	RUBBER	CAOUTCHOUC	
4	330792	1	CRISTAL L/D	GLASS RH	GLACE CD	
	330793	1	CRISTAL L/I	GLASS LH	GLACE CG	
5	152214	2	CRISTAL	GLASS	GLACE	
6	332435	2	SEGURO	CATCH	ASSURANCE	
7	151126	1	SOPORTE	SUPPORT	SUPPORT	
8	200813	1	PERFIL	PROFILE	PROFIL	
9	151127	1	SOPORTE	SUPPORT	SUPPORT	
10	152215	2	CRISTAL	GLASS	GLACE	
11	348395	2	PERFIL	PROFILE	PROFIL	
12	330799	1	PERFIL	PROFILE	PROFIL	
13	330798	1	PERFIL	PROFILE	PROFIL	
14	250959	4	TORNILLO	BOLT	BOULON	
15	3816	4	ARANDELA PLANA	PLAIN WASHER	RONDELLE PLANE	
16	3073	4	ARANDELA MUELLE	SPRING WASHER	RONDELLE RESSORT	
17	180124	4	TUERCA	NUT	ECROU	
18	77707	26	TORNILLO	BOLT	BOULON	
19	182112	2	TORNILLO	BOLT	BOULON	
20	3840	2	ARANDELA PLANA	PLAIN WASHER	RONDELLE PLANE	
21	3074	2	ARANDELA MUELLE	SPRING WASHER	RONDELLE RESSORT	
22	181184	2	TUERCA	NUT	ECROU	
23	78248	8	REMACHE	RIVET	RIVET	
24	348394	2	PERFIL	ANGLE	PROFIL	
25	338360	1	CANAL DESAGUE	DRAIN CHANNEL	CANAL DE DRAINAGE	
26	333486	1	GOMA	RUBBER	CAOUTCHOUC	
27	182135	4	TORNILLO	BOLT	BOULON	
28	3898	8	ARANDELA PLANA	PLAIN WASHER	RONDELLE PLANE	
29	WM108001	4	ARANDELA MUELLE	SPRING WASHER	RONDELLE RESSORT	
30	181185	4	TUERCA	NUT	ECROU	
31	330766	1	REMATE VENTANILLA	WINDOW FINISH OFF	FINITION VITRE	
32	183231	2	TORNILLO	BOLT	BOULON	
33	3898	4	ARANDELA PLANA	PLAIN WASHER	RONDELLE PLANE	
34	3829	8	ARANDELA PLANA	PLAIN WASHER	RONDELLE PLANE	
35	185258	2	ARANDELA	WASHER	RONDELLE	
36	054760	2	ARANDELA ESTRELLA	STAR WASHER	RONDELLE D'ETOILE	
37	181185	2	TUERCA	NUT	ECROU	
38	730135	1	GOMA	RUBBER	CAOUTCHOUC	
39	730017	1	PERFIL L/I	ANGLE LH	PROFIL CG	
	730018	1	PERFIL L/D	ANGLE RH	PROFIL CD	
40	182113	8	TORNILLO	BOLT	BOULON	
41	3840	8	ARANDELA PLANA	PLAIN WASHER	RONDELLE PLANE	
42	3074	8	ARANDELA MUELLE	SPRING WASHER	RONDELLE RESSORT	

442604

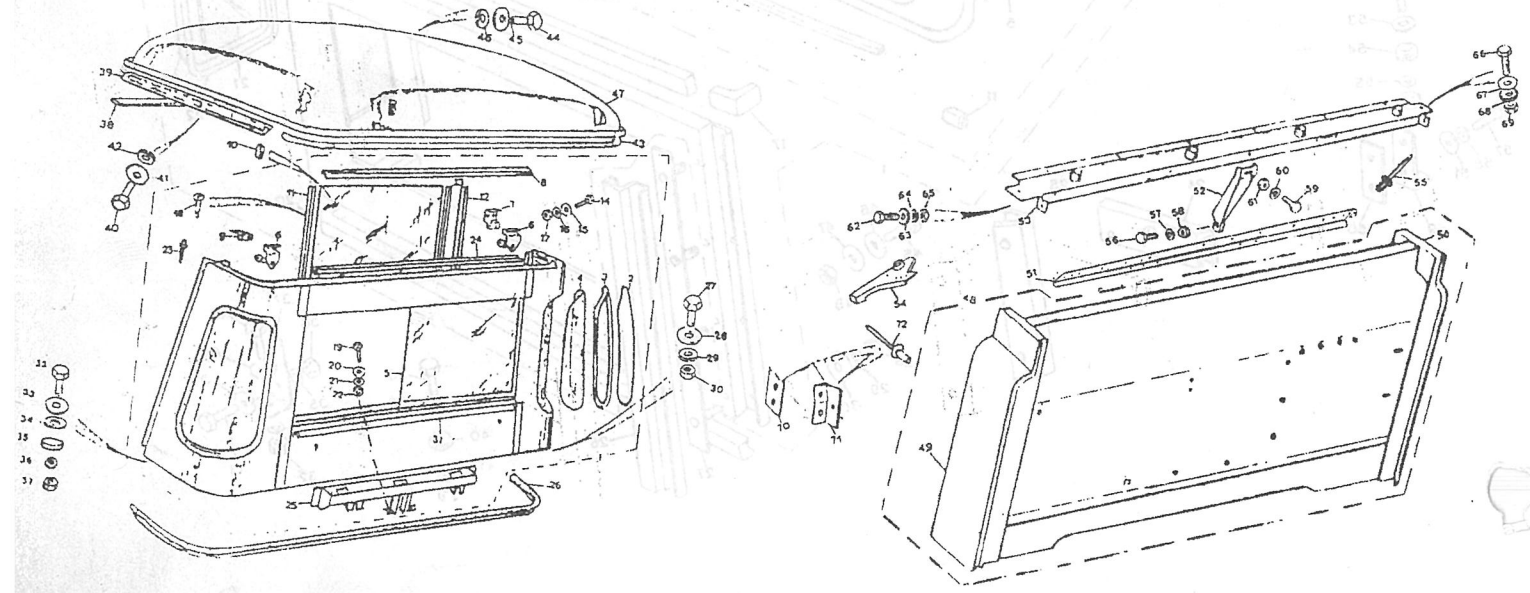

PUBLICACION N:790776 GRUPO=14 CARROCERIA SUBGRUPO=CABINA Y TECHO
EDICION N: 1 GROUP=14 BODY SUBGROUP=CAB AND TROPICAL ROD
GROUPE=14 CARROSSERIE SUBGROUPE=CABINE ET TOIT

N.FIG PLATE N.FIG	N.PIEZA PARTNUMBER N.PIECE	CAN QTY OUT	DENOMINACION	DESCRIPTION	DENOMINATION	OBSERVACIONES
43	730451	1	GOMA	RUBBER	CAOUTCHOUC	
44	182113	4	TORNILLO	BOLT	BOULON	
	255209	14	TORNILLO	BOLT	BOULON	
45	3900	18	ARANDELA PLANA	PLAIN WASHER	RONDELLE PLANE	
46	3074	18	ARANDELA MUELLE	SPRING WASHER	RONDELLE RESSORT	
47	730627	1	TECHO POLIESTER	POLIESTER TOD	TOIT POLIESTER	
48	737016	1	CONJ.PANEL	PANEL ASSY	ENS PANNEAU	
49	737014	1	PANEL LATERAL L/I	SIDE PANEL LH	PANNEAU LATERAL CG	
50	737017	1	PANEL LATERAL L/D	SIDE PANEL RH	PANNEAU LATERAL CD	
51	738299	1	REMATE SUPERIOR DELA	FRONT TOP CAPPING	FLANC DE CAISE AVANT	
52	330767	1	SOPORTE	BRACKET	SUPPORT	
53	330750	1	PERFIL	ANGLE	PROFIL	
54	208301	1	REMATE SUPERIOR L/I	TOP CAPPING LH	FLANC DE CAISE CG	
	208302	1	REMATE SUPERIOR L/D	TOP CAPPING RH	FLANC DE CAISE CD	
55	78248	6	REMACHE	RIVET	RIVET	
	78410	50	REMACHE	RIVET	RIVET	
56	255209	1	TORNILLO	BOLT	BOULON	
57	3074	1	ARANDELA MUELLE	SPRING WASHER	RONDELLE RESSORT	
58	181184	1	TUERCA	NUT	ECROU	
59	182113	1	TORNILLO	BOLT	BOULON	
60	3074	1	ARANDELA MUELLE	SPRING WASHER	RONDELLE RESSORT	
61	181184	1	TUERCA	NUT	ECROU	
62	182113	4	TORNILLO	BOLT	BOULON	
63	3900	4	ARANDELA PLANA	PLAIN WASHER	RONDELLE PLANE	
64	3074	4	ARANDELA MUELLE	SPRING WASHER	RONDELLE RESSORT	
65	181184	4	TUERCA	NUT	ECROU	
66	255209	6	TORNILLO	BOLT	BOULON	
67	3900	6	ARANDELA PLANA	PLAIN WASHER	RONDELLE PLANE	
68	3074	6	ARANDELA MUELLE	SPRING WASHER	RONDELLE RESSORT	
69	181184	6	TUERCA	NUT	ECROU	
70	201835	1	PLACA	PLATE	PLAQUE	
71	201836	1	PLACA L/D	PLATE RH	PLAQUE CD	
	201837	1	PLACA L/I	PLATE LH	PLAQUE CG	
72	070838	10	REMACHE	RIVET	RIVET	

142604

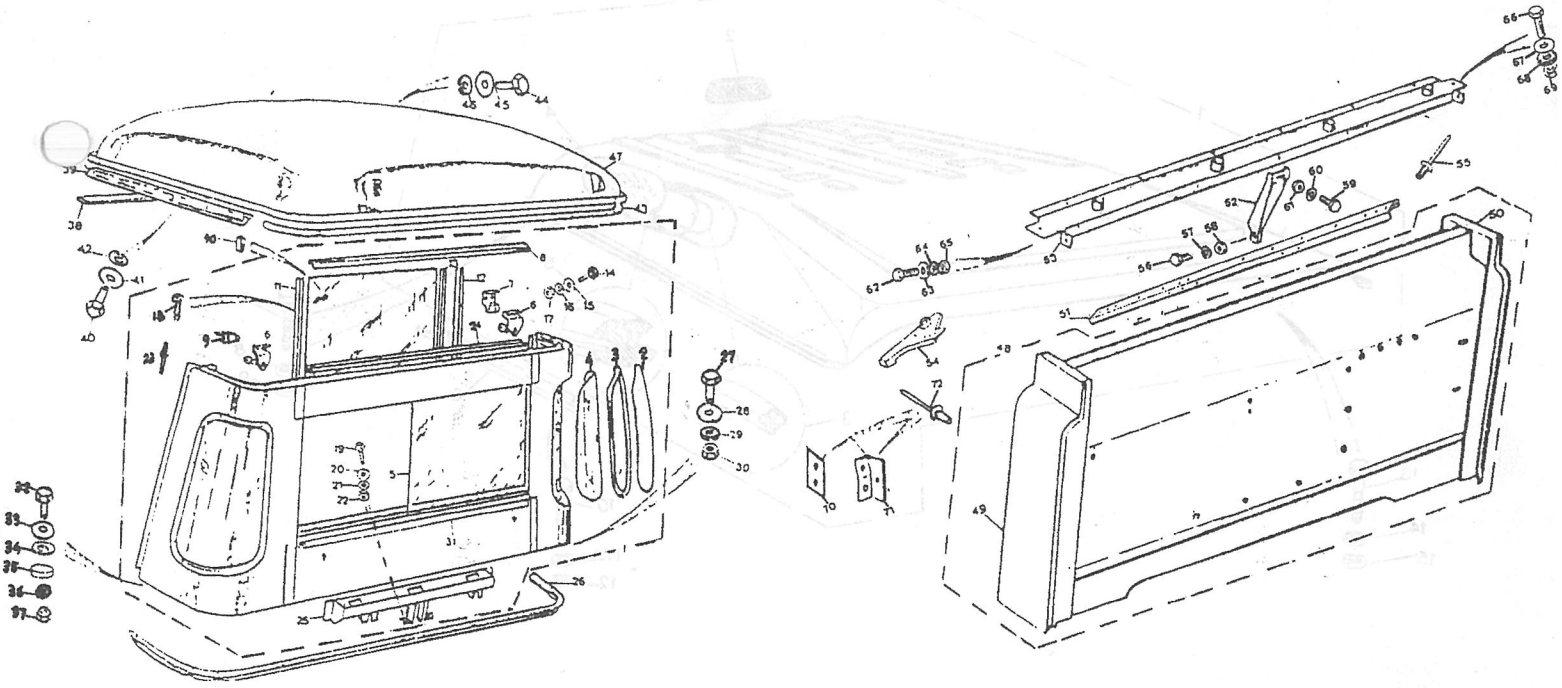

PUBLICACION N:790776 GRUPO=14 CARROCERIA SUBGRUPO=TECHO DE POLIESTER
EDICION N: 1 GROUP=14 BODY SUBGROUP=POLIESTER TOP
GROUPE=14 CARROSSERIE SUBGROUPE=TOIT POLIESTER

N.FIG PLATE N.FIG	N.PIEZA PARTNUMBER N.PIECE	CAN QTY OUT	DENOMINACION	DESCRIPTION	DENOMINATION	OBSERVACIONES
1	738319	1	TECHO POLIESTER	POLIESTER TOD	TOIT POLIESTER	
2	205986	2	AIREADOR	AERATOR	AERATION	
3	302178	2	GOMA	RUBBER	CAOUTCHOUC	
4	308070	2	CRISTAL	GLASS	GLACE	
5	201763	2	GOMA	RUBBER	CAOUTCHOUC	
6	730017	1	PERFIL L/I	ANGLE LH	PROFIL CG	
	730018	1	PERFIL L/D	ANGLE RH	PROFIL CD	
7	182113	6	TORNILLO	BOLT	BOULON	
	255209	12	TORNILLO	BOLT	BOULON	
8	3074	18	ARANDELA MUELLE	SPRING WASHER	RONDELLE RESSORT	
9	3900	18	ARANDELA PLANA	PLAIN WASHER	RONDELLE PLANE	
10	182113	8	TORNILLO	BOLT	BOULON	
11	3074	8	ARANDELA MUELLE	SPRING WASHER	RONDELLE RESSORT	
12	3840	8	ARANDELA PLANA	PLAIN WASHER	RONDELLE PLANE	
13	255209	6	TORNILLO	BOLT	BOULON	
14	3900	6	ARANDELA PLANA	PLAIN WASHER	RONDELLE PLANE	
15	3074	6	ARANDELA MUELLE	SPRING WASHER	RONDELLE RESSORT	

142710

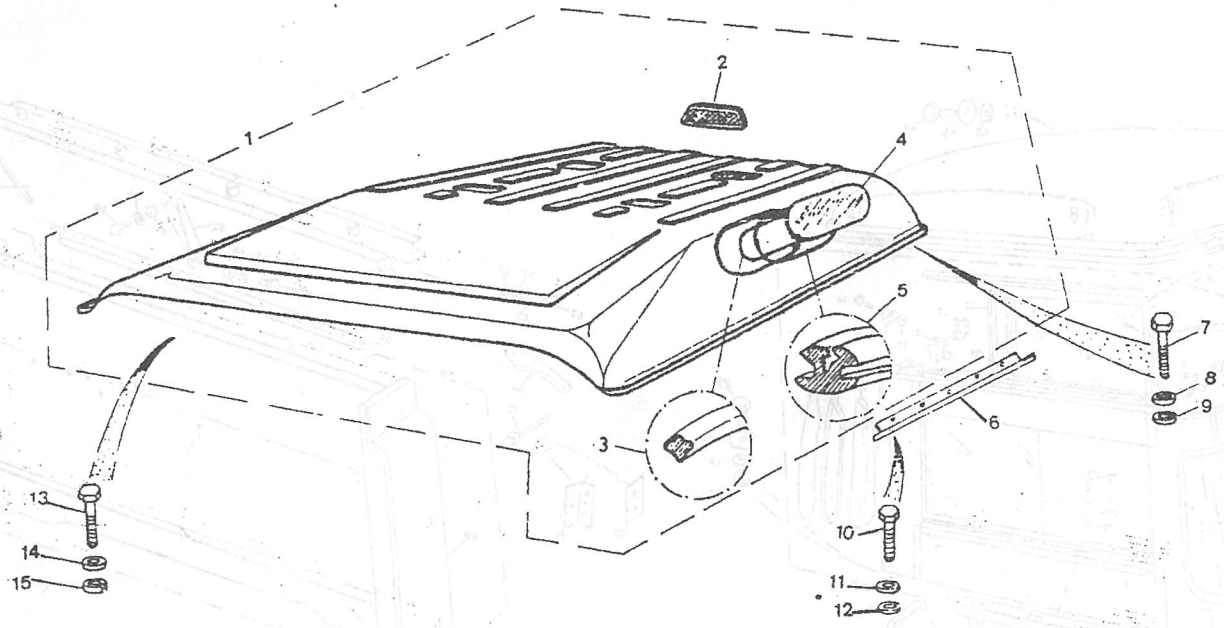

PUBLICACION N:790776 GRUPO=14 CARROCERIA SUBGRUPO=TECHO DE POLIESTER
EDICION N: 1 GROUP=14 BODY SUBGROUP=POLIESTER TOP
GROUPE=14 CARROSSERIE SUBGROUPE=TOIT POLIESTER

N.FIG PLATE N.FIG	N.PIEZA PARTNUMBER N.PIECE	CAN QTY OUT	DENOMINACION	DESCRIPTION	DENOMINATION	OBSERVACIONES
1	738315	1	TECHO POLIESTER	POLIESTER TOD	TOIT POLIESTER	2'5 E
	738322	1	TECHO POLIESTER	POLIESTER TOD	TOIT POLIESTER	2500 L
2	205986	2	AIREADOR	AERATOR	AERATION	
3	201768	2	GOMA	RUBBER	CAOUTCHOUC	
4	201265	2	CRISTAL	GLASS	GLACE	
5	308070	2	CRISTAL	GLASS	GLACE	
6	201763	2	GOMA	RUBBER	CAOUTCHOUC	
7	201764	2	GOMA	RUBBER	CAOUTCHOUC	
8	302178	2	GOMA	RUBBER	CAOUTCHOUC	
9	3900	22	ARANDELA PLANA	PLAIN WASHER	RONDELLE PLANE	
10	730017	1	PERFIL L/I	ANGLE LH	PROFIL CG	
	730018	1	PERFIL L/D	ANGLE RH	PROFIL CD	
11	255209	6	TORNILLO	BOLT	BOULON	
12	3900	6	ARANDELA PLANA	PLAIN WASHER	RONDELLE PLANE	
13	3074	6	ARANDELA MUELLE	SPRING WASHER	RONDELLE RESSORT	
14	182113	8	TORNILLO	BOLT	BOULON	
15	3840	8	ARANDELA PLANA	PLAIN WASHER	RONDELLE PLANE	
16	3074	8	ARANDELA MUELLE	SPRING WASHER	RONDELLE RESSORT	
17	737930	1	PERFIL L/I	ANGLE LH	PROFIL CG	
	737931	1	PERFIL L/D	ANGLE RH	PROFIL CD	
18	182113	6	TORNILLO	BOLT	BOULON	
19	3840	6	ARANDELA PLANA	PLAIN WASHER	RONDELLE PLANE	
20	3074	6	ARANDELA MUELLE	SPRING WASHER	RONDELLE RESSORT	
21	182113	6	TORNILLO	BOLT	BOULON	
	255209	16	TORNILLO	BOLT	BOULON	
22	3074	22	ARANDELA MUELLE	SPRING WASHER	RONDELLE RESSORT	

142713

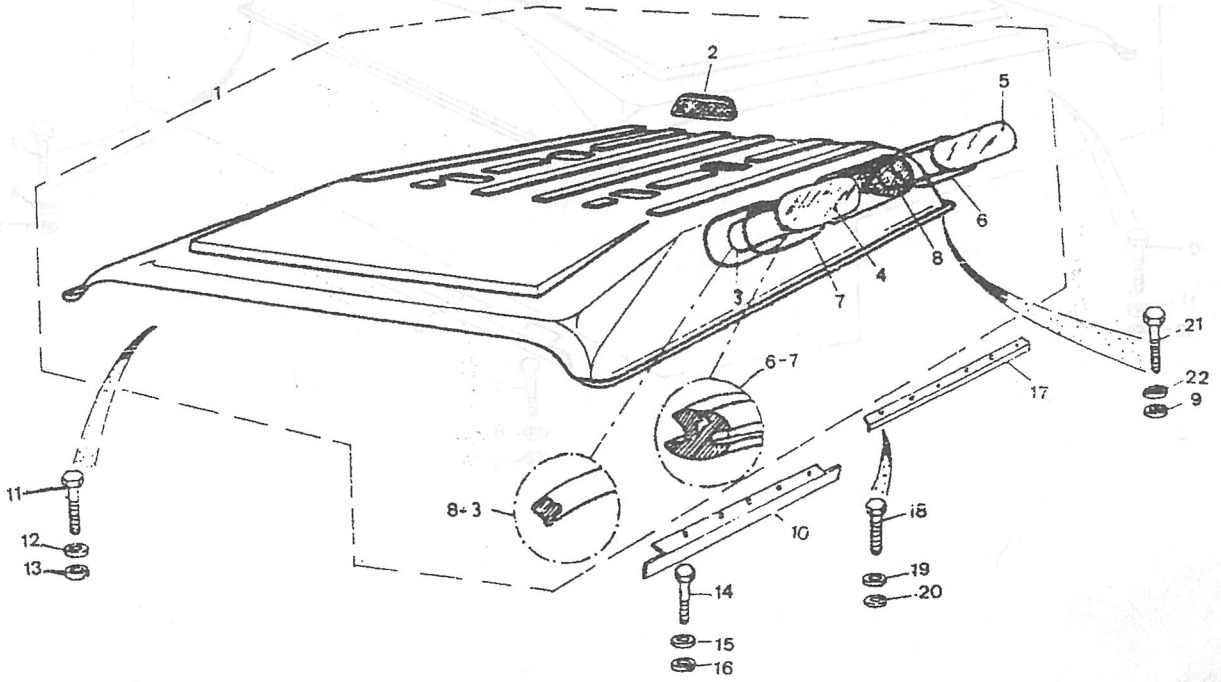

PUBLICACION N:790776 GRUPO=14 CARROCERIA SUBGRUPO=TECHO DE POLIESTER
EDICION N: 1 GROUP=14 BODY SUBGROUP=POLIESTER TOP
GROUPE=14 CARROSSERIE SUBGROUPE=TOIT POLIESTER

N.FIG PLATE N.FIG	N.PIEZA PARTNUMBER N.PIECE	CAN QTY OUT	DENOMINACION	DESCRIPTION	DENOMINATION	OBSERVACIONES
1	738300	1	TECHO POLIESTER	POLIESTER TOD	TOIT POLIESTER	DOBLE PTA.TRASER
	738318	1	TECHO POLIESTER	POLIESTER TOD	TOIT POLIESTER	
2	205986	2	AIREADOR	AERATOR	AERATION	
3	182113	8	TORNILLO	BOLT	BOULON	
	255209	20	TORNILLO	BOLT	BOULON	
4	3900	28	ARANDELA PLANA	PLAIN WASHER	RONDELLE PLANE	
5	3074	28	ARANDELA MUELLE	SPRING WASHER	RONDELLE RESSORT	
6	730017	1	PERFIL L/I	ANGLE LH	PROFIL CG	
	730018	1	PERFIL L/D	ANGLE RH	PROFIL CD	
7	182113	8	TORNILLO	BOLT	BOULON	
8	3840	8	ARANDELA PLANA	PLAIN WASHER	RONDELLE PLANE	
9	3074	8	ARANDELA MUELLE	SPRIN WASHER	RONDELLE RESSORT	
10	255209	6	TORNILLO	BOLT	BOULON	
11	3900	6	ARANDELA PLANA	PLAIN WASHER	RONDELLE PLANE	
12	3074	6	ARANDELA MUELLE	SPRING WASHER	RONDELLE RESSORT	

142715

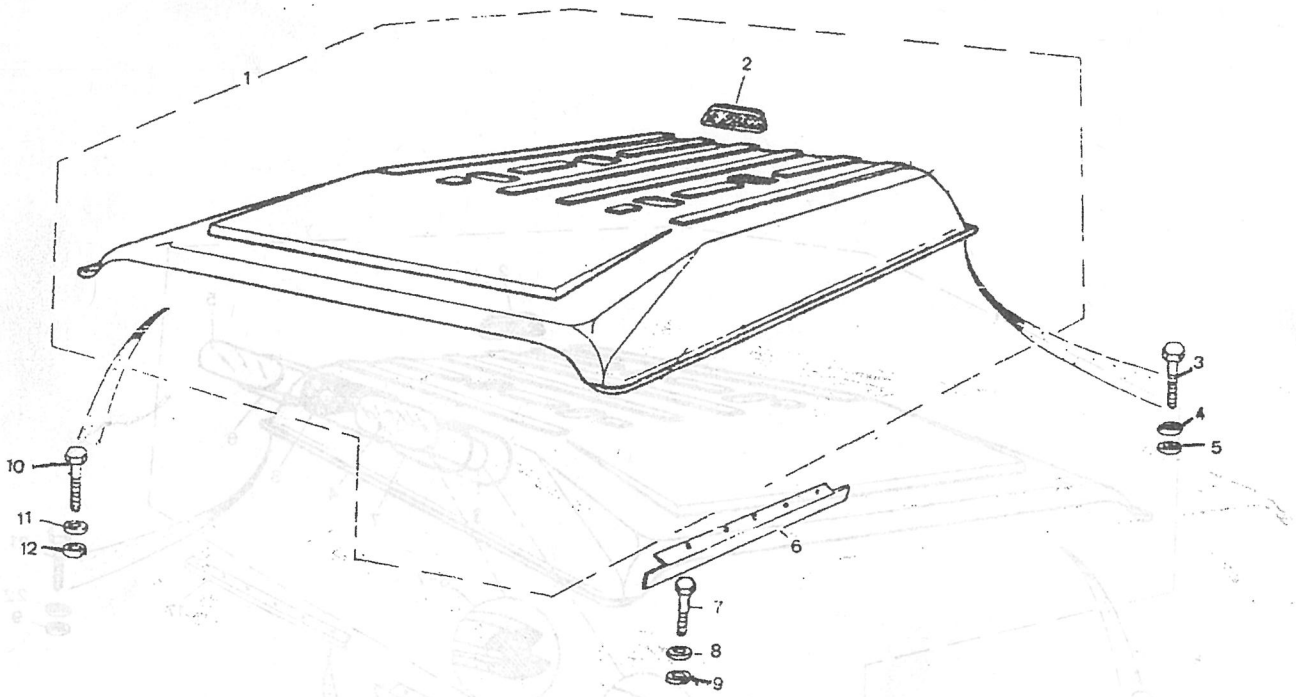

PUBLICACION N:790776
EDICION N: 1

GRUPO=14 CARROCERIA
GROUP=14 BODY
GROUPE=14 CARROSSERIE

SUBGRUPO=TECHO DE POLIESTER
SUBGROUP=POLIESTER TOD
SUBGROUPE=TOIT POLIESTER

N.FIG PLATE N.FIG	N.PIEZA PARTNUMBER N.PIECE	CAN QTY OUT	DENOMINACION	DESCRIPTION	DENOMINATION	OBSERVACIONES
1	738317	1	TECHO POLIESTER	POLIESTER TOD	TOIT POLIESTER	
2	205986	2	AIREADOR	AERATOR	AERATION	
3	182113	6	TORNILLO	BOLT	BOULON	
	255209	12	TORNILLO	BOLT	BOULON	
4	3900	18	ARANDELA PLANA	PLAIN WASHER	RONDELLE PLANE	
5	3074	18	ARANDELA MUELLE	SPRING WASHER	RONDELLE RESSORT	
6	730017	1	PERFIL L/I	ANGLE LH	PROFIL CG	
	730018	1	PERFIL L/D	ANGLE RH	PROFIL CD	
7	182113	8	TORNILLO	BOLT	BOULON	
8	3840	8	ARANDELA PLANA	PLAIN WASHER	RONDELLE PLANE	
9	3074	8	ARANDELA MUELLE	SPRING WASHER	RONDELLE RESSORT	
10	255209	6	TORNILLO	BOLT	BOULON	
11	3900	6	ARANDELA PLANA	PLAIN WASHER	RONDELLE PLANE	
12	3074	6	ARANDELA MUELLE	SPRING WASHER	RONDELLE RESSORT	

1427151

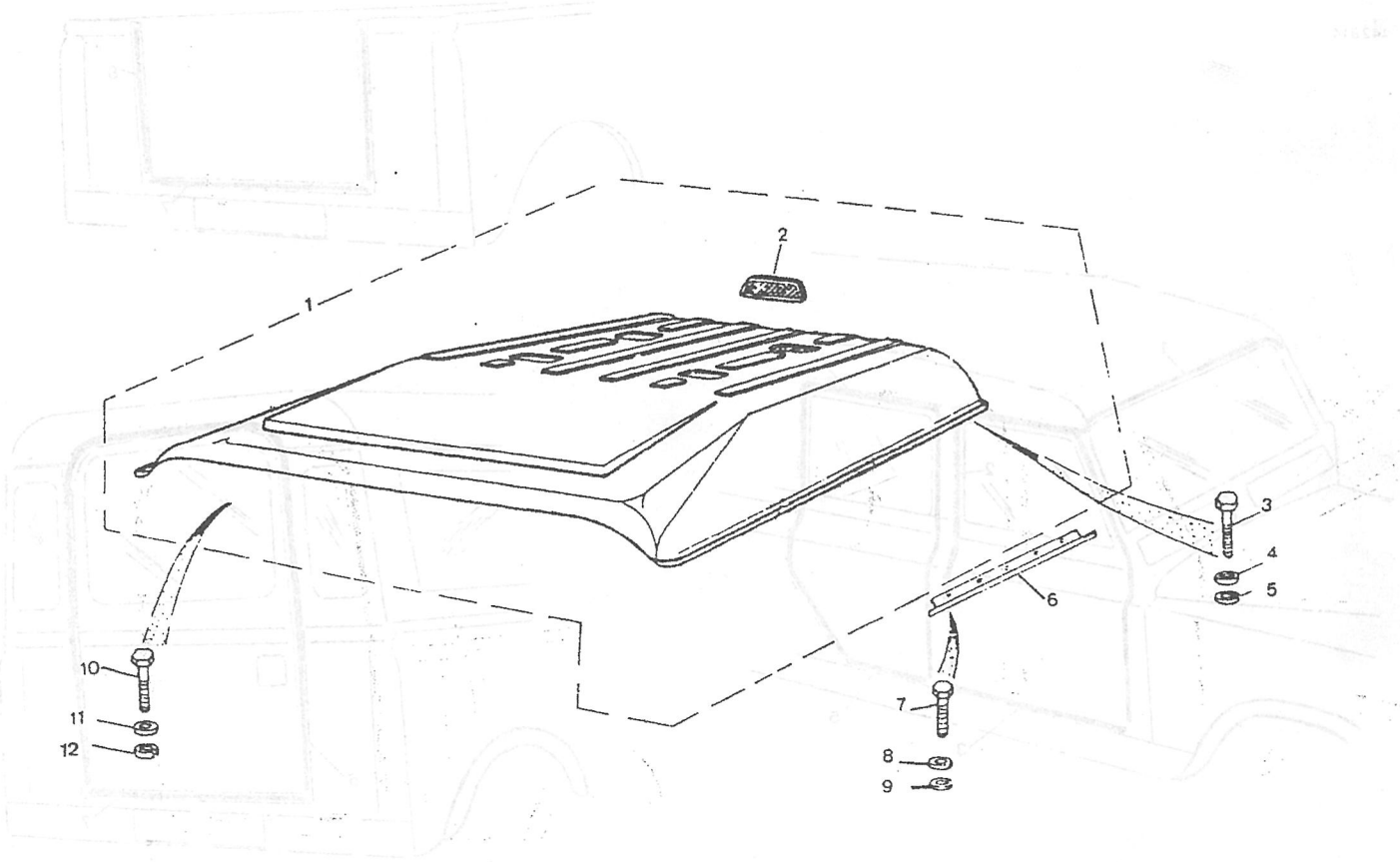

PUBLICACION N:790776 GRUPO=14 CARROCERIA SUBGRUPO=GOMAS
EDICION N: 1 GROUP=14 BODY SUBGROUP=RUBBER
GROUPE=14 CARROSSERIE SUBGROUPE=CAOUTCHOUC

N.FIG PLATE N.FIG	N.PIEZA PARTNUMBER N.PIECE	CAN QTY OUT	DENOMINACION	DESCRIPTION	DENOMINATION	OBSERVACIONES
1	730135	1	GOMA	RUBBER	CAOUTCHOUC	
2	201875	1	GOMA LI	RUBBER LH	CAOUTCHOUC CG	
	201876	1	GOMA LD	RUBBER RH	CAOUTCHOUC CD	
3	200902	2	GOMA	RUBBER	CAOUTCHOUC	
4	203193	1	GOMA LI	RUBBER LH	CAOUTCHOUC CG	
	203194	1	GOMA LD	RUBBER RH	CAOUTCHOUC CD	
5	200905	2	GOMA	RUBBER	CAOUTCHOUC	
6	205928	1	GOMA	RUBBER	CAOUTCHOUC	
7	204750	1	GOMA	RUBBER	CAOUTCHOUC	
8	205928	S-N	GOMA	RUBBER	CAOUTCHOUC	

142814

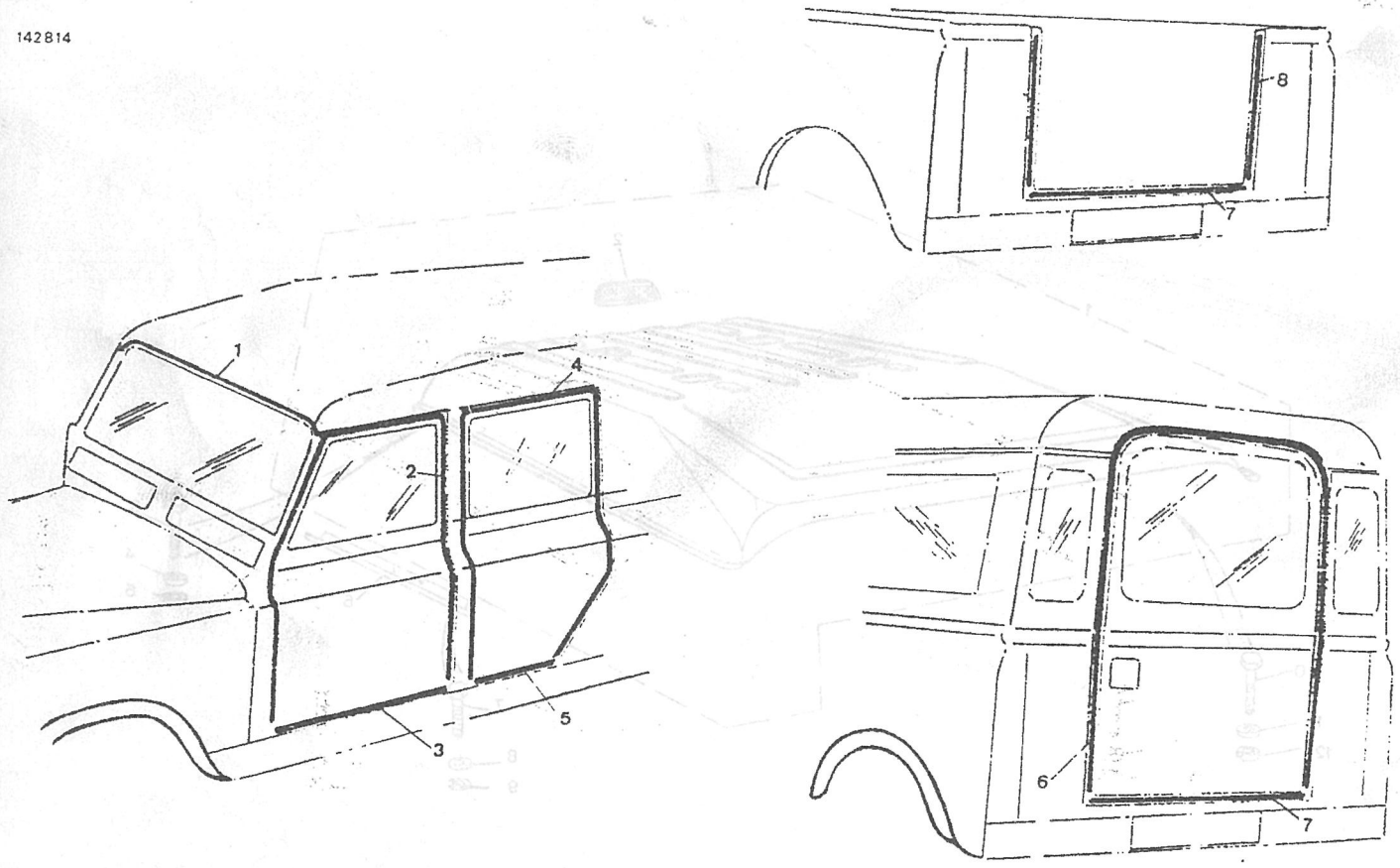

PUBLICACION N:790776 GRUPO=14 CARROCERIA SUBGRUPO=ANAGRAMAS
EDICION N: 1 GROUP=14 BODY SUBGROUP=ANAGRAM
GROUPE=14 CARROSSERIE SUBGROUPE=ANAGRAME

N.FIG PLATE N.FIG	N.PIEZA PARTNUMBER N.PIECE	CAN QTY OUT	DENOMINACION	DESCRIPTION	DENOMINATION	OBSERVACIONES
1	730250	1	BANDA DECORATIVA LD	DECORATIVE STRIP RH	BANDE DECORATIF CD	
	730251	1	BANDA DECORATIVA LI	DECORATIVE STRIP LH	BANDE DECORATIF CG	
2	730255	1	BANDA DECORATIVA LD	DECORATIVE STRIP RH	BANDE DECORATIF CD	
	730256	1	BANDA DECORATIVA LI	DECORATIVE STRIP LH	BANDE DECORATIF CG	
3	730252	1	BANDA DECORATIVA	DECORATIVE STRIP	BANDE DECORATIF	
4	730257	1	BANDA DECORATIVA	DECORATIVE STRIP	BANDE DECORATIF	
5	730253	1	BANDA DECORATIVA LD	DECORATIVE STRIP RH	BANDE DECORATIF CD	
	730254	1	BANDA DECORATIVA LI	DECORATIVE STRIP LH	BANDE DECORATIF CG	
6	730258	1	BANDA DECORATIVA LD	DECORATIVE STRIP RH	BANDE DECORATIF CD	
	730259	1	BANDA DECORATIVA LI	DECORATIVE STRIP LH	BANDE DECORATIF CG	

142816

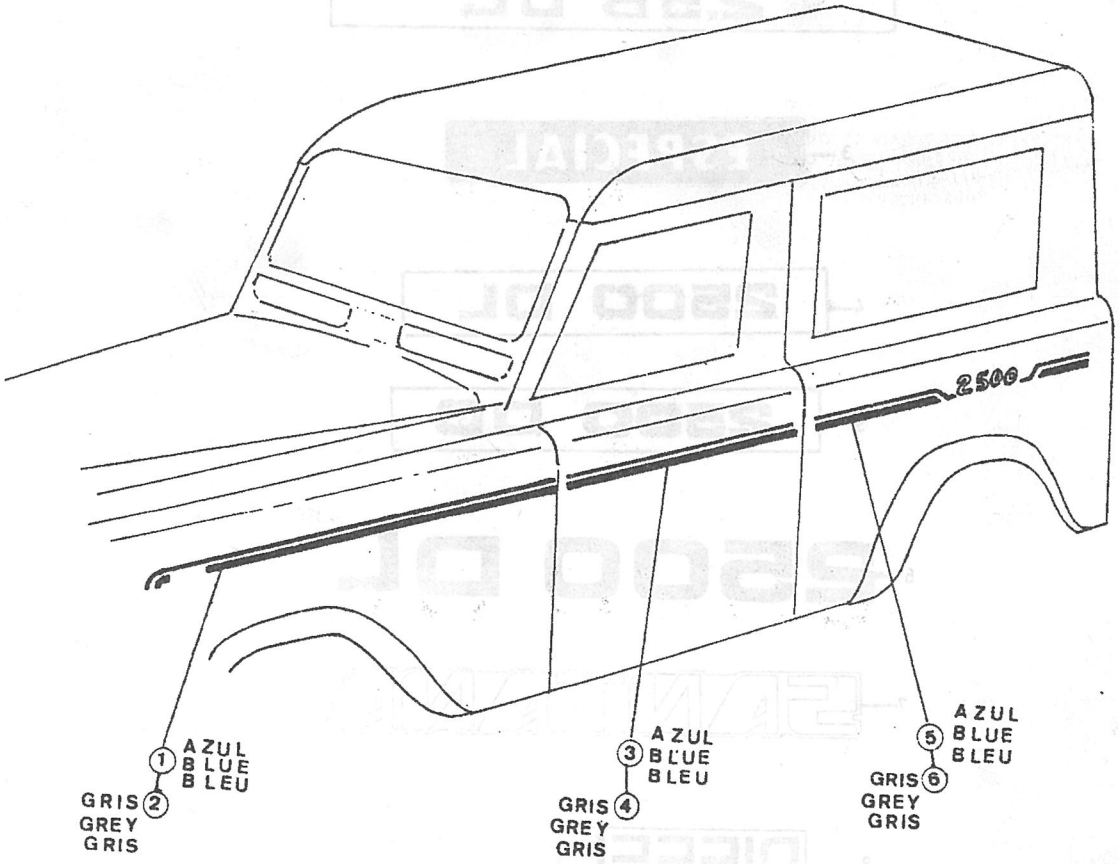

PUBLICACION N:790776 GRUPO=14 CARROCERIA SUBGRUPO=ANAGRAMAS
EDICION N: 1 GROUP=14 BODY SUBGROUP=ANAGRAM
GROUPE=14 CARROSSERIE SUBGROUPE=ANAGRAME

N.FIG PLATE N.FIG	N.PIEZA PARTNUMBER N.PIECE	CAN QTY OUT	DENOMINACION	DESCRIPTION	DENOMINATION	OBSERVACIONES
1	730608	1	ANAGRAMA POSTERIOR	REAR ANAGRAM	ANAGRAMME ARRIERE	
2	730610	1	ANAGRAMA POSTERIOR	REAR ANAGRAM	ANAGRAMME ARRIERE	
3	201013	1	ANAGRAMA POSTERIOR	REAR ANAGRAM	ANAGRAMME ARRIERE	
4	730192	1	ANAGRAMA POSTERIOR	REAR ANAGRAM	ANAGRAMME ARRIERE	
5	730191	1	ANAGRAMA POSTERIOR	REAR ANAGRAM	ANAGRAMME ARRIERE	
6	730279	2	ANAGRAMA AZUL	BLUE ANAGRAM	ANAGRAMME BLEU	
	730280	2	ANAGRAMA GRIS	GREY ANAGRAM	ANAGRAMME GRIS	
7	77814U80000	1	ANAGRAMA DELANTERO	FRONT ANAGRAM	ANAGRAMME AVANT	
8	205715	1	ANAGRAMA DIESEL	ANAGRAM DIESEL	ANAGRAMME DIESEL	

1428161

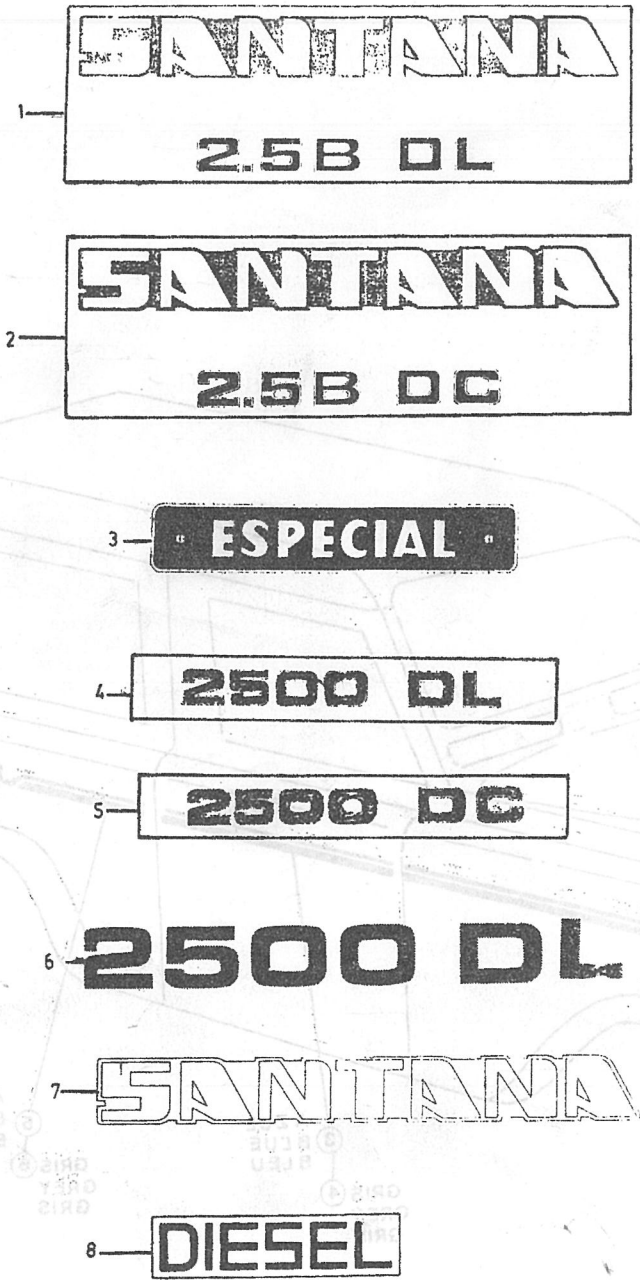

PUBLICACION N:790776 GRUPO=14 CARROCERIA SUBGRUPO=PLACA CARASTERISTICA
EDICION N: 1 GROUP=14 BODY SUBGROUP=PLATE CHARACTERISTIC
GROUPE=14 CARROSSERIE SUBGROUPE=PLAQUE CARACTERISTIQ

N.FIG PLATE N.FIG	N.PIEZA PARTNUMBER N.PIECE	CAN QTY OUT	DENOMINACION	DESCRIPTION	DENOMINATION	OBSERVACIONES
1	737904	2	PLACA 2'5 B DL	PLATE 2'5 B DL	PLAQUE 2'5 B DL	
2	200749	2	PLACA 2'5 B ESPECIAL	PLATE 2'5 B E.	PLAQUE 2'5 B E.	
3	737905	2	PLACA 2500 C	PLATE 2500 C	PLAQUE 2500 C	
4	737906	2	PLACA 2500 L	PLATE 2500 L	PLAQUE 2500L	
5	737903	2	PLACA 2'5 B DC	PLATE 2'5 B DC	PLAQUE 2'5 B DC	
6	203067	1	PLACA INSTRUCCIONES	INSTRUCTION PLATE	PLAQUE INSTRUCTION	
7	121455	1	PLAQCA INSTRUCCIONES	INSTRUCTION PLATE	PLAQUE INSTRUCTION	
8	730306	1	PLACA FABRICANTE	MANUFACTURER PLATE	PLAQUE FABRICANT	2500 C
	730307	1	PLACA FABRICANTE	MANUFACTURER PLATE	PLAQUE FABRICANT	2500 L
	730570	1	PLACA FABRICANTE	MANUFACTURER PLATE	PLAQUE FABRICANT	2'5 C
	730571	1	PLACA FABRICANTE	MANUFACTURER PLATE	PLAQUE FABRICANT	2'5 L-2'5 E
	730757	1	PLACA FABRICANTE	MANUFACTURER PLATE	PLAQUE FABRICANT	2'5 L-C/CH

142 826

1 — TARA 1.680 KILOGRAMOS
P.M.A. 2.760 KILOGRAMOS

2 — TARA 1.760 KILOGRAMOS
P.M.A. 2.760 KILOGRAMOS

3 — TARA 1.640 KILOGRAMOS
P.M.A. 2.330 KILOGRAMOS

4 — TARA 1.860 KILOGRAMOS
P.M.A. 2.950 KILOGRAMOS

5 — TARA 1.450 KILOGRAMOS
P.M.A. 2.150 KILOGRAMOS

8 —

LAND ROVER SANTANA S.A.		
	"A"	
VSELB		
	"B"	Kg.
	"C"	Kg.
1-	"D"	Kg.
2-	"E"	Kg.

7 — CAJA REDUCTORA

Marchas cortas — C
Punto muerto — PM
Marchas largas — L
Dirección de marcha
4 RUEDAS 2 RUEDAS

6 — CAJA REDUCTORA
MARCHAS LARGAS
PUNTO MUERTO
MARCHAS CORTAS

PARA PONER LAS 4 RUEDAS MOTRICES CON MARCHAS "LARGAS" PRESIONAR SOBRE LA BOLA AMARILLA. PARA QUITARLAS CAMBIAR LA PALANCA ROJA A LA POSICION DE "CORTAS" Y VOLVERLA A LA DE "LARGAS". LA BOLA AMARILLA SUBIRA AUTOMATICAMENTE.

PUBLICACION N:790776 GRUPO=14 CARROCERIA SUBGRUPO=TOLDO CORTO
EDICION N: 1 GROUP=14 BODY SUBGROUP=SHORT HOOD
GROUPE=14 CARROSSERIE SUBGROUPE=BACHE COURT

N.FIG PLATE N.FIG	N.PIEZA PARTNUMBER N.PIECE	CAN QTY OUT	DENOMINACION	DESCRIPTION	DENOMINATION	OBSERVACIONES
1	157507	1	TOLDO Y ARQUILLOS 88	HOOD AND STICKS A 88	ENS BACHE ET ARCE 88	
	157532	1	TOLDO Y ARQUILLOS109	HOOD AND STICKS A109	ENS BACHE ET ARCE109	
2	331308	1	CAPOTA 109	MOOD 109	BACHE 109	
	331372	1	CAPOTA 88	HOOD 88	BACHE 88	
3	306340	1	PLASTICO	PLASTIC	PLASTIQUE	
4	332950	1	CONJ ARQUILLOS 88	HOODSTICKS ASSY 88	ENS ARCEAU 88	
5	332952	1	CONJ ARQUILLOS 109	HOODSTICKS ASSY 109	ENS ARCEAU 109	
6	332465	1	ARQUILLO	HOOSTICKS	ARCEAU	
7	330557	1	ARQUILLO 88	HOODSTICKS 88	ARCEAU 88	
8	330699	1	ARQUILLO 109	HOODTICKS 109	ARCEAU 109	
9	330553	1	ARQUILLO	HOODSTICKS	ARCEAU	
10	332459	2	TIRANTE 88	TIE TUBE 88	BARRE 88	
11	330897	2	TIRANTE 109	TIE TUBE 109	BARRE 109	
12	330896	2	TIRANTE 109	TIE TUBE 109	BARRE 109	
13	331675	1	PERFIL	ANGLE	PROFIL	
14	331674	1	PERFIL LI	ANGLE LH	PROFIL CG	
15	331673	1	PERFIL LD	ANGLE RH	PROFIL CD	
16	331676	2	PERFIL	ANGLE	PROFIL	
17	301328	8	CHAPA 88	PLATE 88	PLAQUE 88	
18	301328	13	CHAPA 109	PLATE 109	PLAQUE 109	
19	345699	2	ANILLA	RING	ANNEAU	
20	78248	16	REMACHE 88	RIVET 88	RIVET 88	
21	78248	26	REMACHE 109	RIVET 109	RIVET 109	
22	331281	1	BASTIDOR	FRAME	CHASIS	
23	330578	1	GANCHO PARA CUERD LD	HOOK FOR ROPE RH	CROCHET POUR CORD CD	
	330579	1	GANCHO PARA CUERD LI	HOOK FOR ROPE LH	CROCHET POUR CORD CG	
24	78210	16	TORNILLO	BOLT	BOULON	
25	3900	32	ARANDELA PLANA	PLATE WASHER	RONDELLE PLANE	
26	3074	16	ARANDELA MUELLE	SPRING WASHER	RONDELLE RESSORT	
27	181184	16	TUERCA	NUT	ECROU	
28	348430	2	PLACA CON ESPARRAGO	PLATE WITH STUD	PLAQUE AVEC GOUJONS	
29	78120	2	TORNILLO	BOLT	BOULON	
30	3073	2	ARANDELA MUELLE	SPRING WASHER	RONDELLE RESSORT	
31	180124	2	TUERCA	NUT	ECROU	
32	304301	4	ENGANCHE	CLINCH	ATTELAGE	
33	182120	4	TORNILLO	BOLT	BOULON	
34	3899	4	ARANDELA PLANA	PLATE WASHER	RONDELLE RESSORT	
35	WM108001	4	ARANDELA MUELLE	SPRING WASHER	RONDELLE RESSORT	
36	181185	4	TUERCA	NUT	ECROU	
37	181184	6	TUERCA	NUT	ECROU	
38	300924	2	GANCHO PARA CORREA C	HOOK FOR HOOD BELT	CROCHET POUR COURRIE	
39	3073	4	ARANDELA MUELLE	SPRING WASHER	RONDELLE RESSORT	
40	237121	4	TORNILLO	BOLT	BOULON	
41	180124	4	TUERCA	NUT	ECROU	

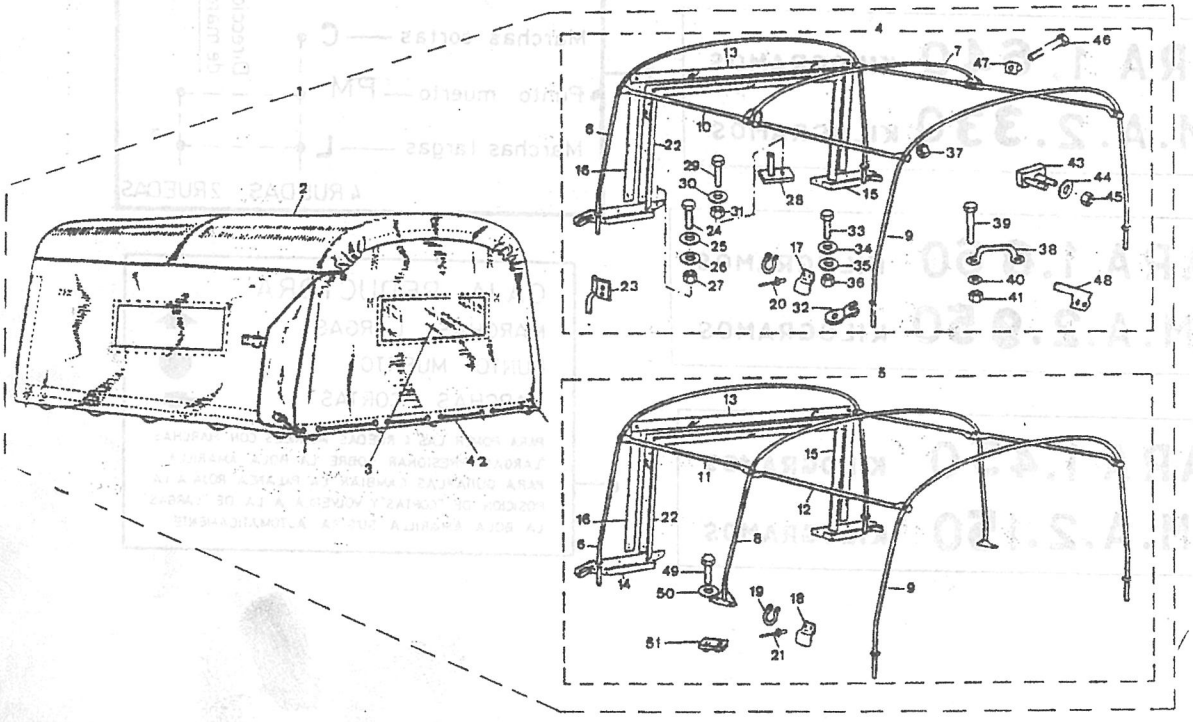

PUBLICACION N:790776
EDICION N: 1

GRUPO=14 CARROCERIA
GROUP=14 BODY
GROUPE=14 CARROSSERIE

SUBGRUPO=TOLDO CORTO
SUBGROUP=SHORT HOOD
SUBGROUPE=BACHE COURT

N.FIG PLATE N.FIG	N.PIEZA PARTNUMBER N.PIECE	CAN QTY OUT	DENOMINACION	DESCRIPTION	DENOMINATION	OBSERVACIONES
42	331106	1	LONA TRASERA	REAR HOOD	BACHE ARRIERE	
43	330908	2	PLACA CON ESPARRAGOS	PLATE WITH STUDS	PLAQUE AVEC GOUJONS	
44	3074	4	ARANDELA MUELLE	SPRING WASHER	RONDELLE RESSORT	
45	181184	4	TUERCA	NUT	ECROU	
46	78303	6	TORNILLO	BOLT	BOULON	
47	78205	6	TUERCA "U"	NUT "U"	ECROU "U"	
48	334245	1	ENGANCHE TOLDO LD	HOOK FOR HOOD RH	CROCHET POUR BACHE	
	334246	1	ENGANCHE TOLDO LI	HOOK FOR HOOD	CROCHET POUR BACHE	
49	182113	4	TORNILLO	BOLT	BOULON	
50	3074	4	ARANDELA MUELLE	SPRING WASHER	RONDELLE RESSORT	
51	330830	4	PLACA CON TUERCAS	PLATE WITH NUTS	PLAQUE AVEC ECROUS	

142901

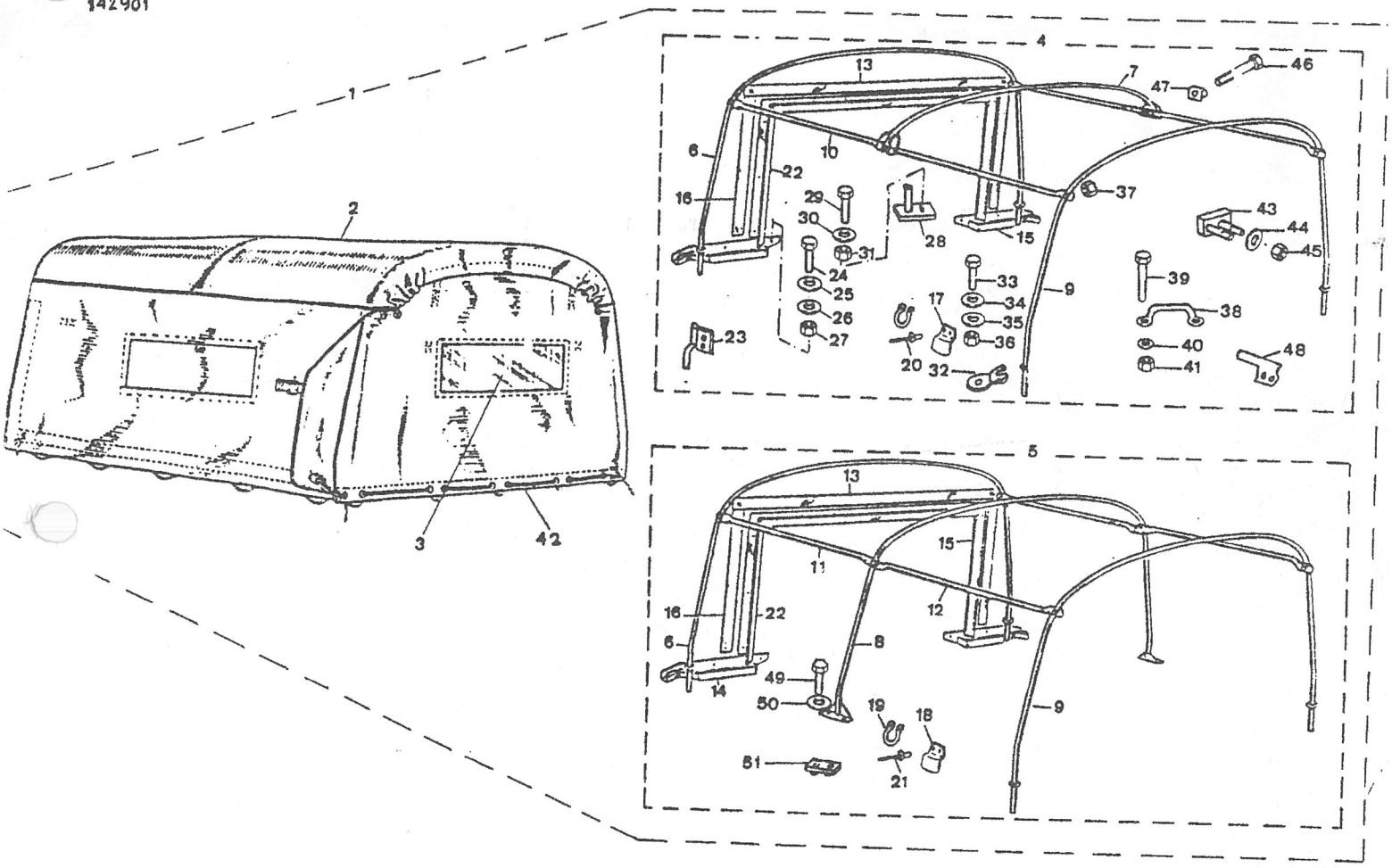

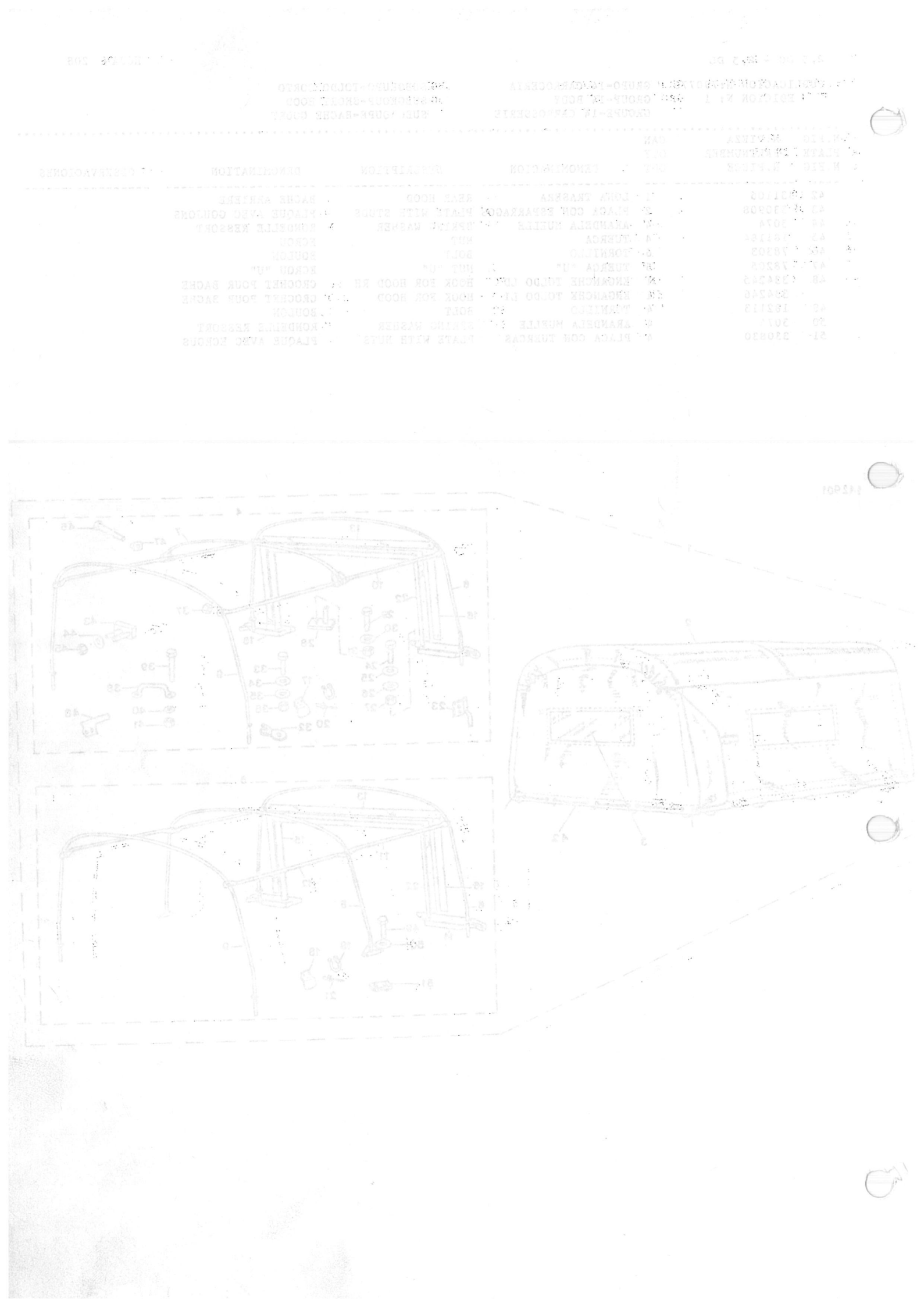

GRUPO 15 15 TAPICERIA

GROUP 15 15 TRIM

GROUP 15 15 GARNITURE

COMPOSICION.....COMPOSITION.....COMPOSICION

REFERENCIA PARTNUMBER NUM.PIECE	DENOMINACION	DESCRIPTION	DENOMINATION
150001	INSONORIZACION	SOUNDPROOFING	INSONORISATION
150007	MOQUETAS	MOQUETTES	MOQUETTES
150099	TAPICERIA	TRIM	GARNITURE
1501011	TAPICERIA	TRIM	GARNITURE
150120	TAPICERIA	TRIM	GARNITURE
150122	TAPICERIA	TRIM	GARNITURE
150131	ESTERILLAS	NATS	TAPIS
150206	ASIENTOS DELANTEROS	FRONT SEAT	SIEGE AVANT
150213	ASIENTOS DELANTEROS	FRONT SEAT	SIEGE AVANT
150218	ASIENTOS DELANTEROS	FRONT SEAT	SIEGE AVANT
150310	ASIENTOS LATERALES	SIDE SEAT	SIEGE LATERALE
150312	ASIENTOS LATERALES	SIDE SEAT	SIEGE LATERALE

GROUPE: 15 45 TAPICERIA

ORDRE: 15 45 TRIM

CHAPT: 15 45 GARNITURE

COMPOSANTS ....COMPOSITION....CONDITIONNEMENT

NUMERO ARTICLE NOM.FICHE	DENOMINACION	DESCRIPTION	DENOMINACION
150001	INDONORMACION	CONDIPROCEDIMIENTO	INDONORMISATION
150007	MOQUETTES	MOQUETTES	MOQUETTES
150095	TAPICERIA	TRIM	GARNITURE
150101	TAPICERIA	TRIM	GARNITURE
150120	TAPICERIA	TRIM	GARNITURE
150122	TAPICERIA	TRIM	GARNITURE
150131	REFERTILLAS	MATS	TAPIS
150200	ASIENTOS DELANTEROS	VASES SEATS	SIEGE AVANT
150213	ASIENTOS DELANTEROS	FRONT SEATS	SIEGE AVANT
150218	ASIENTOS DELANTEROS	FRONT SEATS	SIEGE AVANT
150310	ASIENTOS LATERALES	SIDE SEAT	SIEGE LATERALE
150312	ASIENTOS LATERALES	SIDE SEAT	SIEGE LATERALE

PUBLICACION: 750716 EDIC - 1

PUBLICACION N:790776 GRUPO=15 TAPICERIA SUBGRUPO=INSONORIZACION
EDICION N: 1 GROUP=15 TRIM SUBGROUP=SOUNDPROOFING
GROUPE=15 GARNITURE SUBGROUPE=INSONORISATION

N.FIG PLATE N.FIG	N.PIEZA PARTNUMBER N.PIECE	CAN QTY OUT	DENOMINACION	DESCRIPTION	DENOMINATION	OBSERVACIONES
1	730205	3	INSONORIZACION	SOUNDFROOFING	INSONORISATION	
2	730207	1	INSONORIZACION	SOUNDPROOFING	INSONORISATION	
3	730207	2	INSONORIZACION	SOUNDPROOFING	INSONORISATION	
4	730205	2	INSONORIZACION	SOUNDPROOFING	INSONORISATION	
5	730208	4	INSONORIZACION	SOUNDPROOFING	INSONORISATION	
6	730208	11	INSONORIZACION	SOUNDPROOFING	INSONORISATION	
7	730207	3	INSONORIZACION	SOUNDPROOFING	INSONORISATION	
8	730204	2	INSONORIZACION	SOUNDPROOFING	INSONORISATION	
9	730206	2	INSONORIZACION	SOUNDPROOFING	INSONORISATION	
10	730206	5	INSONORIZACION	SOUNDPROOFING	INSONORISATION	
11	730207	2	INSONORIZACION	SOUNDPROOFING	INSONORISATION	
12	730205	4	INSONORIZACION	SOUNDPROOFING	INSONORISATION	
13	730208	11	INSONORIZACION	SOUNDPROOFING	INSONORISATION	
14	730204	2	INSONORIZACION	SOUNDPROOFING	INSONORISATION	

150001

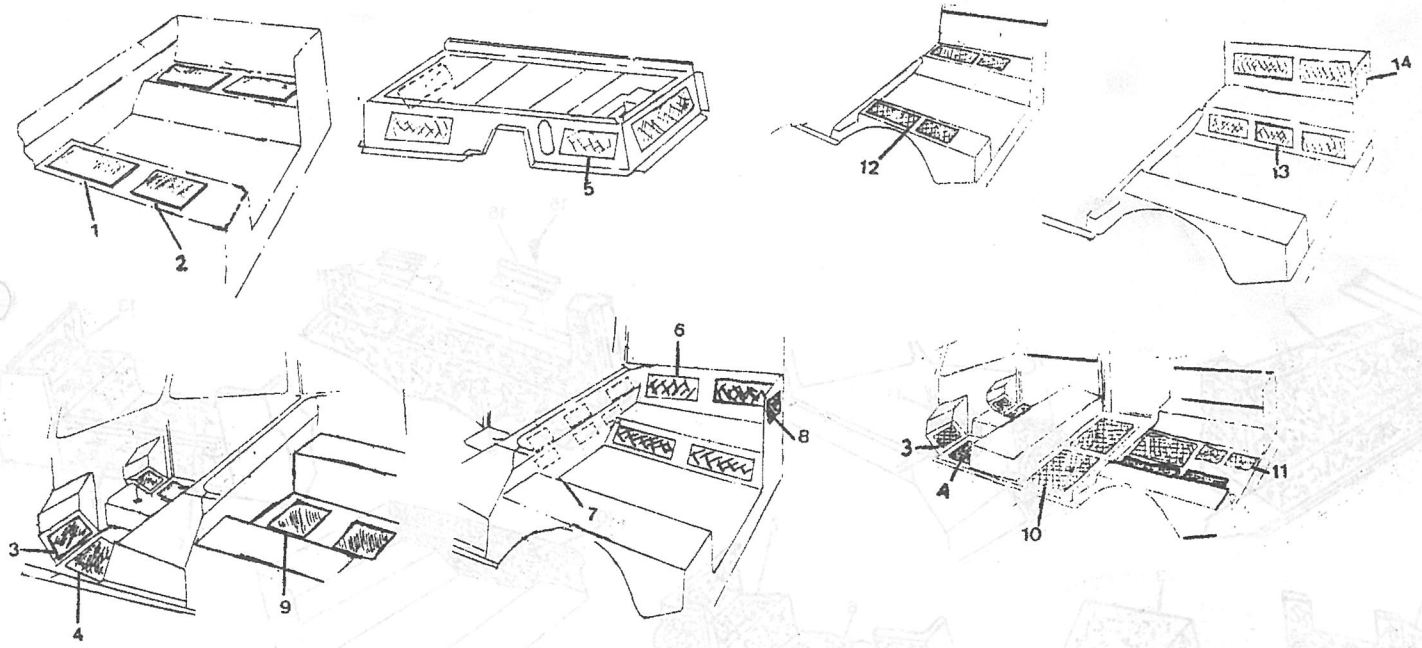

PUBLICACION N:790776 GRUPO=15 TAPICERIA SUBGRUPO=MOQUETAS
EDICION N: 1 GROUP=15 TRIM SUBGROUP=MOQUETTES
GROUPE=15 GARNITURE SUBGROUPE=MOQUETTES

N.FIG PLATE N.FIG	N.PIEZA PARTNUMBER N.PIECE	CAN QTY OUT	DENOMINACION	DESCRIPTION	DENOMINATION	OBSERVACIONES
1	730111	1	MOQUETA L/D	MOQUETTES RH	MOQUETTES CD	
	730112	1	MOQUETA L/I	MOQUETTES LH	MOQUETTES CG	
2	730115	1	MOQUETA	MOQUETTES	MOQUETTES	
3	730110	1	MOQUETA	MOQUETTES	MOQUETTES	
4	730104	1	MOQUETA L/I	MOQUETTES LH	MOQUETTES CG	
5	730105	1	MOQUETA L/D	MOQUETTES RH	MOQUETTES CD	
6	730099	1	MOQUETA	MOQUETTES	MOQUETTES	2500 C
7	730118	1	MOQUETA L/D	MOQUETTES RH	MOQUETTES CD	2500 C
	730119	1	MOQUETA L/I	MOQUETTES LH	MOQUETTES CG	2500 C
8	730097	1	MOQUETA	MOQUETTES	MOQUETTES	2500 L
9	730116	1	MOQUETA	MOQUETTES	MOQUETTES	2500 L
10	730100	1	MOQUETA	MOQUETTES	MOQUETTES	2500 C
	730101	1	MOQUETA	MOQUETTES	MOQUETTES	2500 C
	730117	1	MOQUETA	MOQUETTES	MOQUETTES	2500 C
11	730109	1	MOQUETA L/D	MOQUETTES RH	MOQUETTES CD	
	730113	1	MOQUETA L/D	MOQUETTES RH	MOQUETTES CD	
12	730108	1	MOQUETA L/I	MOQUETTES LH	MOQUETTES CG	
	730114	1	NOQUETA L/I	MOQUETTES LH	MOQUETTES CG	
13	730102	1	MOQUETA L/I	MOQUETTES LH	MOQUETTES CG	2500 L
	730103	1	MOQUETA L/D	MOQUETTES RH	MOQUETTES CG	2500 L
	730106	2	MOQUETA	MOQUETTES	MOQUETTES	2500 L
	730107	1	MOQUETA L/D	MOQUETTES RH	MOQUETTES CD	2500 L
	730120	1	MOQUETA L/D	MOQUETTES RH	MOQUETTES CD	2500 L
	730121	1	MOQUETA L/I	MOQUETTES LH	MOQUETTES CG	2500 L
14	730098	1	PERFIL	ANGLE	PROFIL	
15	77704	7	TORNILLO	BOLT	BOULON	
16	396541	2	PERFIL	ANGLE	PROFIL	

150907

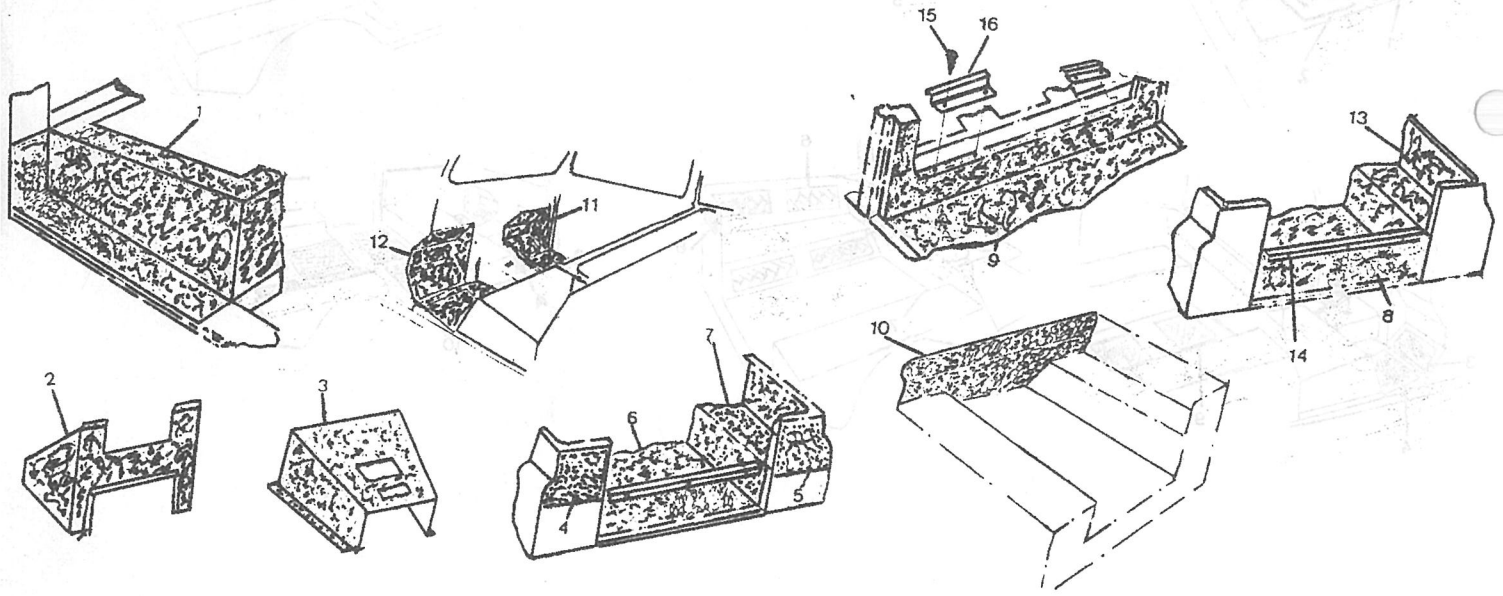

PUBLICACION N:790776 GRUPO=15 TAPICERIA SUBGRUPO=TAPICERIA
EDICION N: 1 GROUP=15 TRIM SUBGROUP=TRIM
GROUPE=15 GARNITURE SUBGROUPE=GARNITURE

N.FIG PLATE N.FIG	N.PIEZA PARTNUMBER N.PIECE	CAN QTY OUT	DENOMINACION	DESCRIPTION	DENOMINATION	OBSERVACIONES
1	MTC5212	1	TAPICERIA DELANT.L/D	FRONT TRIM RH	GARNITURE AVANT CD	
	MWC2314	1	TAPICERIA DELANT.L/I	FRONT TRIM LH	GARNITURE AVANT CG	
2	208545	1	TAPICERIA LATERAL LI	SIDE FRONT TRIM LH	GARNITURE LATERAL CG	2'5 ESP.
	208546	1	TAPICERIA LATERAL LD	SIDE FRONT TRIM RH	GARNITURE LATERAL CD	2'5 ESP.
3	208547	1	TAPICERIA LATERAL LI	SIDE FRONT TRIM LH	GARNITURE LATERAL CG	2'5 ESP.
	208548	1	TAPICERIA LATERAL LD	SIDE FRONT TRIM RH	GARNITURE LATERAL CD	2'5 ESP.
4	737687	2	TAPICERIA TRASERA	REAR TRIM	GARNITURE ARRIERE	2'5 ESP.
5	207913	1	TAPICERIA INFERIO LI	LOWER TRIM LH	GARNITURE INFERIE CG	2'5 ESP.
	207914	1	TAPICERIA INFERIO LD	LOWER TRIM RH	GARNITURE INFERIE CD	2'5 ESP.
6	154330	1	TAPICERIA INFERIO LD	LOWER TRIM RH	GARNITURE INFERIE CD	2'5 ESP.
	154331	1	TAPICERIA INFERIO LI	LOWER TRIM LH	GARNITURE INFERIE CG	2'5 ESP.
7	154328	1	TAPICERIA DELANT.L/D	FRONT TRIM RH	GARNITURE AVANT CD	2'5 ESP.
	154329	1	TAPICERIA DELANT.L/I	FRONT TRIM LH	GARNITURE AVANT CG	2'5 ESP.
8	738258	1	TAPICERIA PTA.TRASER	REAR DOOR TRIM	GARNITURE PORTE ARRI	
9	205916	1	TAPICERIA DELANT.L/I	FRONT TRIM LH	GARNITURE AVANT CG	2'5 ESP.
	205917	1	TAPICERIA DELANT.L/D	FRONT TRIM LH	GARNITURE AVANT CD	2'5 ESP.
	730562	1	TAPICERIA DELANT.L/I	FRONT TRIM LH	GARNITURE AVANT CG	2'5 C-2'5 L
	730563	1	TAPICERIA DELANT.L/D	FRONT TRIM RH	GARNITURE AVANT CD	2'5 C-2'5 L
10	730734	1	CUBRE CERRADURA	COVER OF LOCK	COUVERCLE DE SERRURE	
11	77707	12	TORNILLO	BOLT	BOULON	
12	187405	12	ARANDELA	WASHER	RONDELLE	
13	AB606084	4	TORNILLO	BOLT	BOULON	
14	78177	6	TORNILLO	BOLT	BOULON	
15	4034	6	ARANDELA PLANA	PLAIN WASHER	RONDELLE PLANE	
16	088190	6	ARANDELA ESTRELLA	STAR WASHER	RONDELLE DE ETOILE	
17	180124	6	TUERCA	NUT	ECROU	
18	78140	3	TORNILLO	BOLT	BOULON	
19	184255	3	ARANDELA PLANA	PLAIN WASHER	RONDELLE PLANE	
20	MUC1402	1	ASIDERO	GRAB HANDLE	POIGNEE	
21	SH106204	2	TORNILLO	BOLT	BOULON	
22	WL106004	2	ARANDELA MUELLE	SPRING WASHER	RONDELLE RESSORT	
23	73037	7	CLIP	CLIP	CLIP	

150099

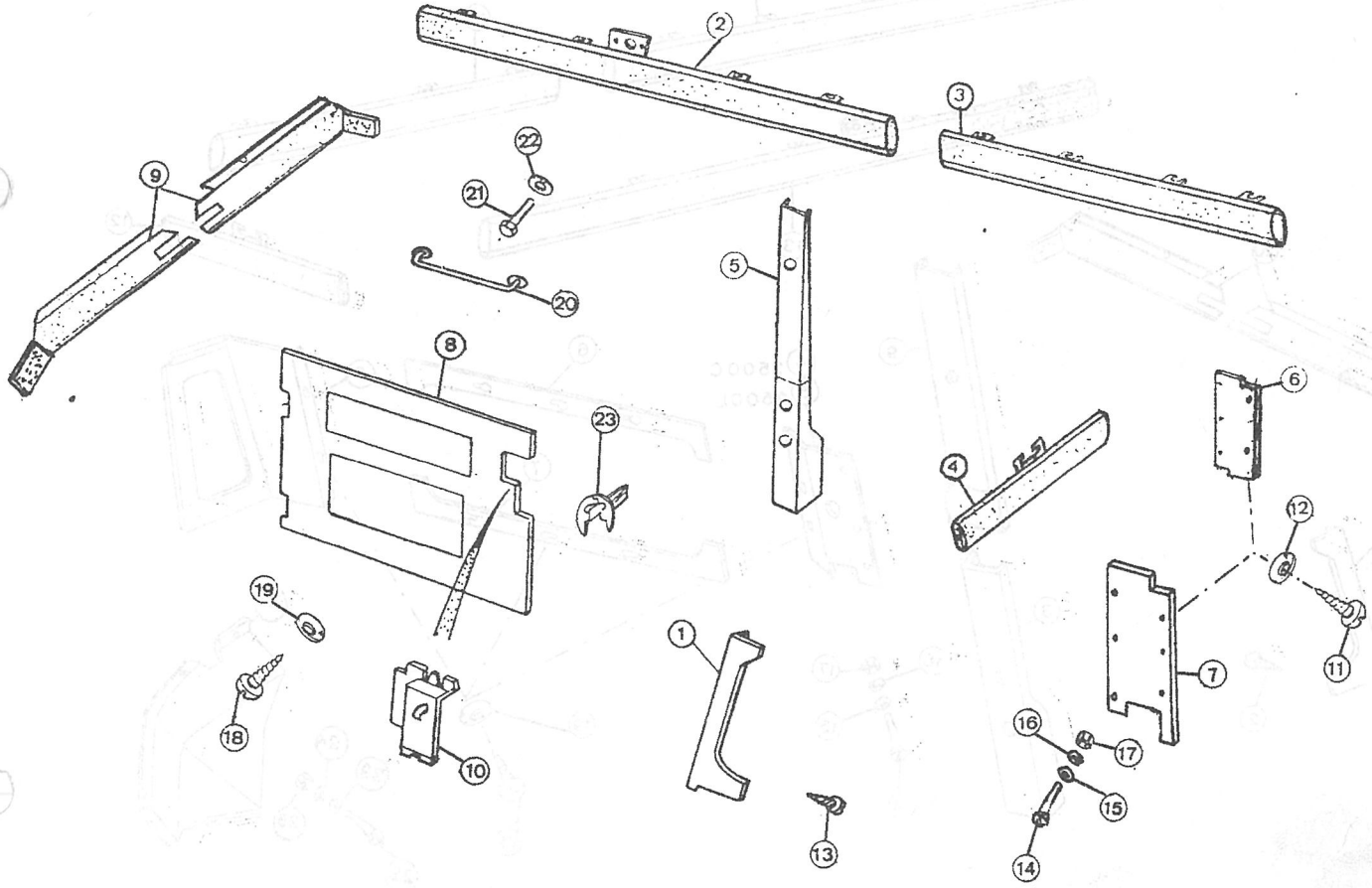

PUBLICACION N:790776 GRUPO=15 TAPICERIA SUBGRUPO=TAPICERIA
EDICION N: 1 GROUP=15 TRIM SUBGROUP=TRIM
GROUPE=15 GARNITURE SUBGROUPE=GARNITURE

N.FIG PLATE N.FIG	N.PIEZA PARTNUMBER N.PIECE	CAN QTY OUT	DENOMINACION	DESCRIPTION	DENOMINATION	OBSERVACIONES
1	MTC5212	1	TAPICERIA DELANTE LD	FRONT TRIM RH	GARNITURE AVANT CD	
	MWC2314	1	TAPICERIA DELANT.L/I	FRONT TRIM LH	GARNITURE AVANT CG	
2	AB606084	4	TORNILLO	SCREW	VIS	
3	730084	1	TAPICERIA COLUMNA LD	COLUMN TRIM RH	GARNITURE DE COLO CD	2500 L
	730085	1	TAPICERIA COLUMNA LI	COLUMN TRIM LH	GARNITURE DE COLO CG	2500 L
4	205933	1	TAPICERIA LATERAL LI	COLUMN TRIM LH	GARNITURE DE CATE CG	2500 C
	205934	1	TAPICERIA LATERAL LD	COLUMN TRIM RH	GARNITURE DE CATE CD	2500 C
5	730214	1	TAPICERIA LATERAL LI	COLUMN TRIM LH	GARNITURE DE CATE CG	2500 L
	730215	1	TAPICERIA LATERAL LD	COLUMN TRIM RH	GARNITURE DE CATE CD	2500 L
6	205931	2	TAPICERIA SUPERIOR	UPPER TRIM	GARNITURE SUPERIEUR	
7	205929	2	TAPICERIA INFERIOR	LOWER TRIM	GARNITURE INFERIEUR	
8	205947	1	TAPICERIA TRASERA LI	REAR TRIM LH	GARNITURE ARRIERE CG	
	205948	1	TAPICERIA TRASERA LD	REAR TRIM RH	GARNITURE ARRIERE CD	
9	730266	2	TAPICERIA COLUMNA	COLUMN TRIM	GARNITURE DE CATE	2500 L
10	208545	1	TAPICERIA LATERAL L/	SIDE FRONT TRIM LH	GARNITURE LATERAL CG	2500 L
	208546	1	TAPICERIA LATERAL LD	SIDE FRONT TRIM RH	GARNITURE LATERAL CD	2500 L
11	737775	1	TAPICERIA TRASERA LD	REAR TRIM RH	GARNITURE ARRIERE CD	2500 L
	737776	1	TAPICERIA TRASERA LI	REAR TRIM LH	GARNITURE ARRIERE CG	2500 L
12	737687	2	TAPICERIA TRASERA	REAR TRIM	GARNITURE ARRIERE	
13	737689	1	TAPICERIA LATERAL LD	SIDE TRIM RH	GARNITURE LATERAL CD	2500 C
	737690	1	TAPICERIA LATERAL LI	SIDE TRIM LH	GARNITURE ARRIERE CG	2500 C
14	78177	6	TORNILLO	BOLT	BOULON	
15	4034	6	ARANDELA PLANA	PLAIN WASHER	RONDELLE PLANE	
16	088190	6	ARANDELA ESTRELLA	STAR WASHER	RONDELLE DE ETOILE	
17	180124	6	TUERCA	NUT	ECROU	
18	77707	26	TORNILLO	BOLT	BOULON	
19	187405	26	ARANDELA	WASHER	RONDELLE	
20	205916	1	TAPICERIA DELANT.L/D	FRONT TRIM RH	GARNITURE AVANT CD	
	205917	1	TAPICERIA DELANT.L/I	FRONT TRIM LH	GARNITURE AVANT CG	
21	205903	1	TAPA TUBO COMBUSTIBL	FUEL FILLER HOSE COV	COUVERCLE TUYAU REMP	2500 C
22	237121	2	TORNILLO	BOLT	BOULON	
23	3073	2	ARANDELA MUELLE	SPRING WASHER	RONDELLE RESSORT	
24	184255	2	ARANDELA PLANA	PLAIN WASHER	RONDELLE PLANE	
25	180124	2	TUERCA	NUT	ECROU	

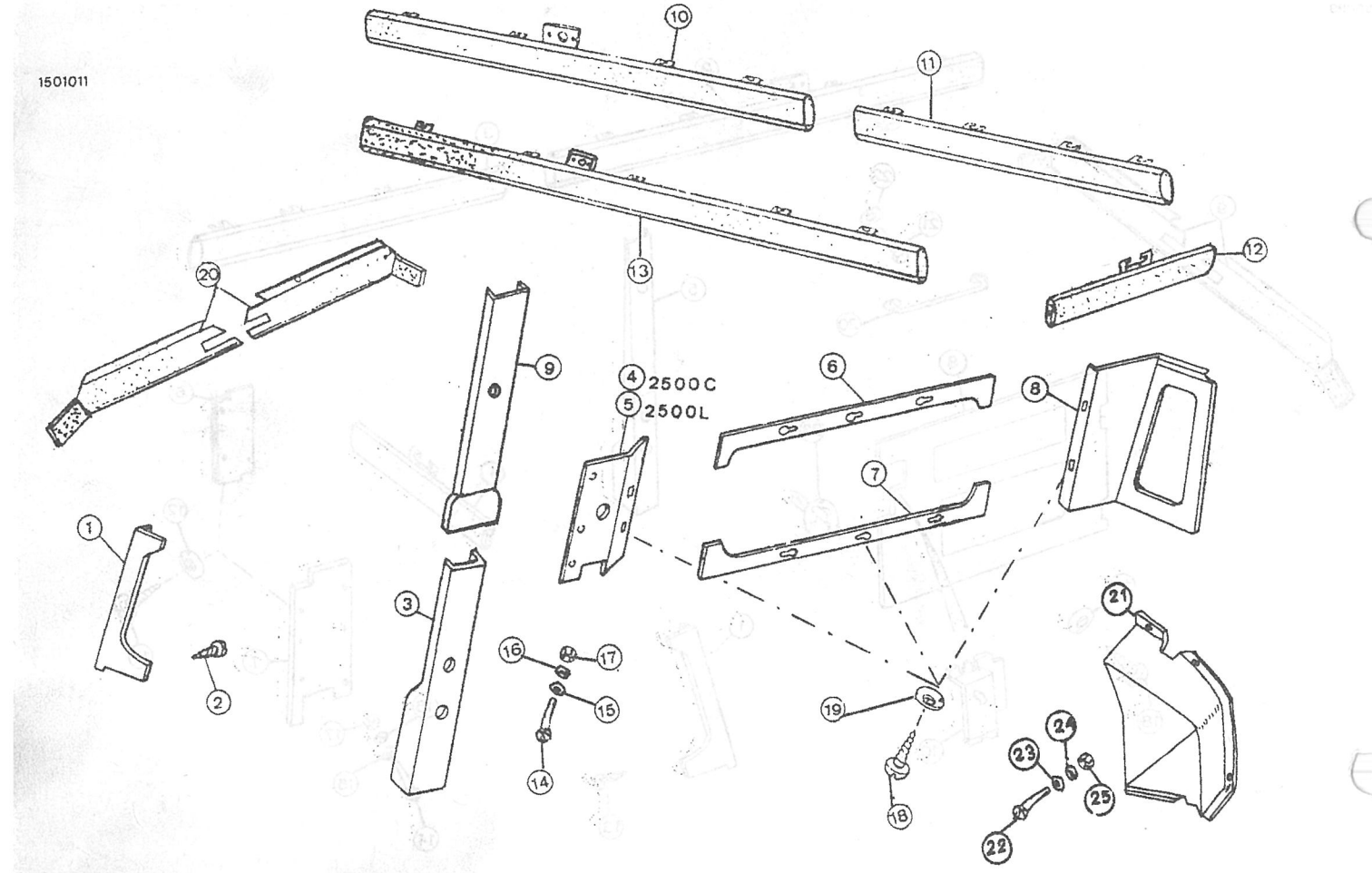

PUBLICACION N:790776 GRUPO=15 TAPICERIA SUBGRUPO=TAPICERIA
EDICION N: 1 GROUP=15 TRIM SUBGROUP=TRIM
GROUPE=15 GARNITURE SUBGROUPE=GARNITURE

N.FIG PLATE N.FIG	N.PIEZA PARTNUMBER N.PIECE	CAN QTY OUT	DENOMINACION	DESCRIPTION	DENOMINATION	OBSERVACIONES
1	204277	1	TAPICERIA LI	TRIM LH	GARNITURE CG	
	204278	1	TAPICERIA LD	TRIM RH	GARNITURE CD	
2	204279	1	TAPICERIA LI	TRIM LH	GARNITURE CG	2'5 ESP.
	204280	1	TAPICERIA LD	TRIM RH	GARNITURE CD	2'5 ESP.
3	203731	4	ASIDERO	HANDLE	MARCHE	
4	185204	8	TORNILLO	BOLT	BOULON	
5	78140	7	TORNILLO	SCREW	VIS	
6	78140	6	TORNILLO	SCREW	VIS	
7	396540K1	1	TAPICERIA	TRIM	GARNITURE	2'5 ESP.

150120

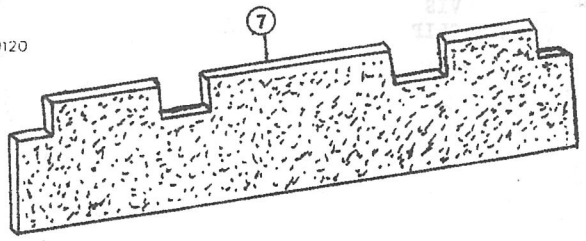

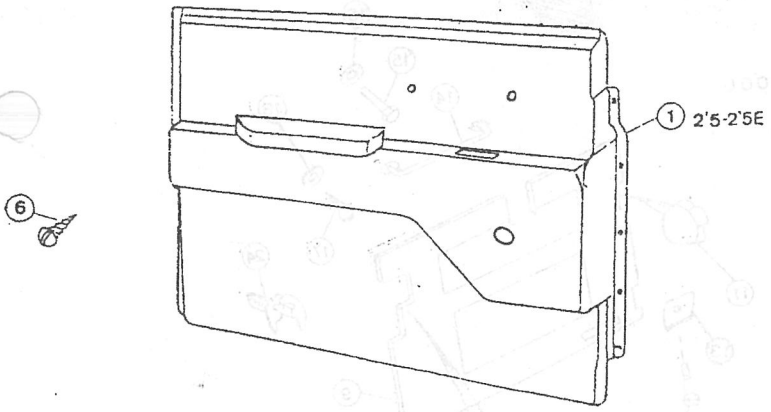

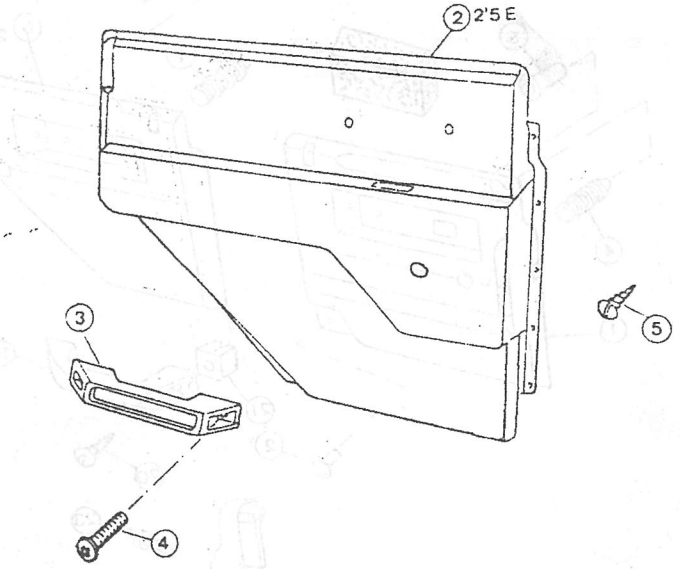

PUBLICACION N:790776 GRUPO=15 TAPICERIA SUBGRUPO=TAPICERIA
EDICION N: 1 GROUP=15 TRIM SUBGROUP=TRIM
GROUPE=15 GARNITURE SUBGROUPE=GARNITURE

N.FIG PLATE N.FIG	N.PIEZA PARTNUMBER N.PIECE	CAN QTY OUT	DENOMINACION	DESCRIPTION	DENOMINATION	OBSERVACIONES
1	MWC2780	1	TAPICERIA L/D	TRIM RH	GARNITURE CD	
	MWC2781	1	TAPICERIA L/I	TRIM LH	GARNITURE CG	
2	79118PCH	2	TORNILLO PLASTICO	PLASTIC SCREW	VIS PLASTIQUEE	
3	MWC3137	2	GOMA ESPUMA	FOAM RUBBER	MOUSSE CAOUTCHOUC	
4	MWC1474	12	TORNILLO PLASTICO	PLASTIC SCREW	VIS PLASTIQUE	
5	MWC3136	12	TUERCA PLASTICO	PLASTIC NUT	ECROU PLASTIQUE	
6	MWC2782	1	TAPICERIA L/D	TRIM RH	GARNITURE CD	2500 L
	MWC2783	1	TAPICERIA L/I	TRIM LH	GARNITURE CG	2500 L
7	MWC1474	12	TORNILLO PLASTICO	PLASTIC SCREW	VIS PLASTIQUE	
8	MWC3136	12	TUERCA PLASTICO	PLSTIC NUT	ECROU PLASTIQUE	
9	738262	1	TAPICERIA	TRIM	GARNITURE	
10	730734	1	TAPICERIA CERRADURA	LOCK COVER	GARNITURE DE SERRURE	
11	MTC9915	1	TAPA SOPORTE TUBO	PIPE BRACKET COVER	COUVERCLE DE SUPPORT	
12	03211-04125	2	TORNILLO	SCREW	VIS	
13	AK606011K1	2	TUERCA PLASTICO	PLASTIC NUT	ECROU PLASTIQUE	
14	MUC1402	1	AGARRADOR	GRAB HANDLE	POIGNNEE	
15	SH106204	2	TORNILLO	SCREW	VIS	
16	WL106004	2	ARANDELA MUELLE	SPRING WASHER	RONDELLE RESSORT	
17	78140	3	TORNILLO	BOLT	BOULON	
18	184255	3	ARANDELA PLANA	PLAIN WASHER	RONDELLE PLANE	
19	Y000451PMA	2	ASIDERO	DOOR PULL	ANSE	
20	AB610081	2	TORNILLO	SCREW	VIS	
21	369077	2	TUERCA PLASTICO	LOKUT NUT	ECROU PLASTIC	
22	MUC3036	1	TAPICERIA SOPORTE LD	TRIM-BRACKET ROD RH	GARNITURE SUPPOR CD	
	MUC3037	1	TAPICERIA SOPORTE LI	TRIM-BRACKET ROD LH	GARNITURE SUPPOR CG	
23	00008-00000	2	TORNILLO	SCREW	VIS	
24	73037	7	CLIP	CLIP	CLIP	

150122

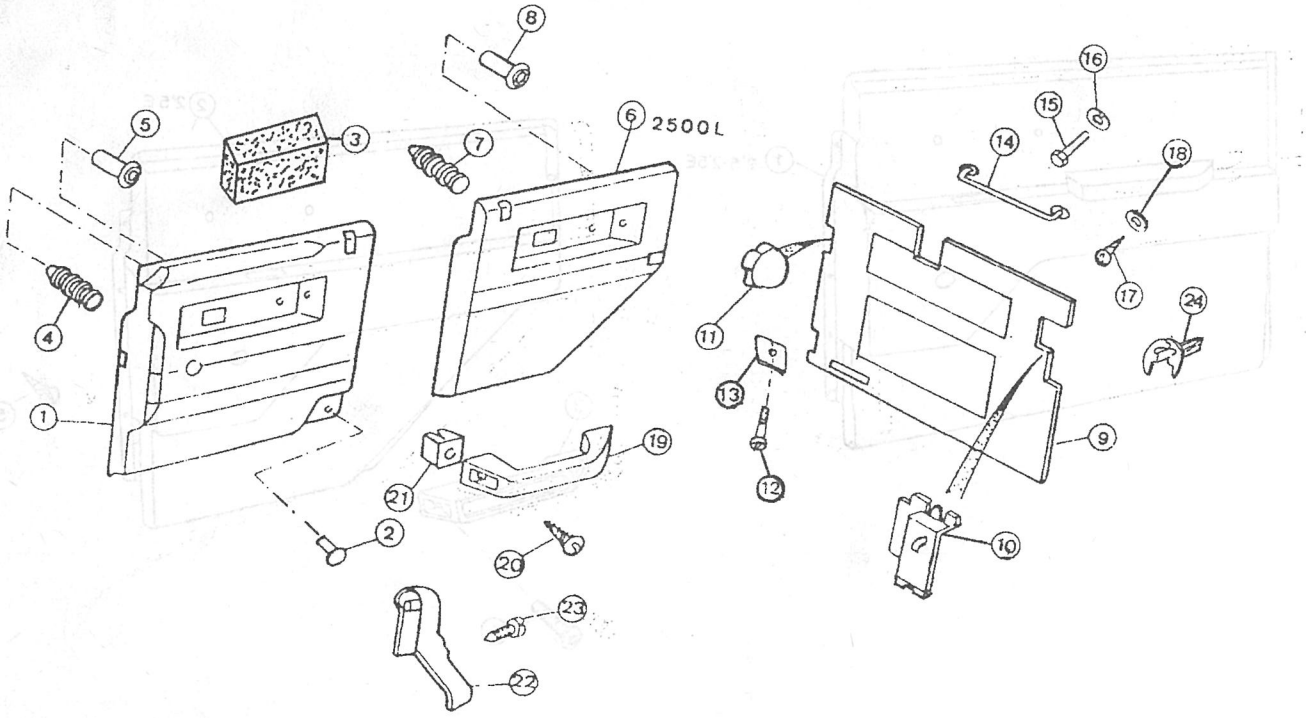

PUBLICACION N:790776
EDICION N: 1

GRUPO=15 TAPICERIA
GROUP=15 TRIM
GROUPE=15 GARNITURE

SUBGRUPO=ESTERILLAS
SUBGROUP=MATS
SUBGROUPE=TAPIS

N.FIG PLATE N.FIG	N.PIEZA PARTNUMBER N.PIECE	CAN QTY OUT	DENOMINACION	DESCRIPTION	DENOMINATION	OBSERVACIONES
1	730581	1	ESTERILLA L/D	MATS RH	TAPICS CD	
2	730580	1	ESTERILLA L/I	MATS LH	TAPICS CG	
3	331481E1	1	ESTERILLA	MATS	TAPIS	2'5 ESP.
4	396542	1	PERFIL CENTRAL	CENTRAL PROFILE	PROFIL CENTRAL	
5	396541	2	PERFIL LATERAL	SIDE PROFILE	PROFIL LATERAL	
6	77704	6	TORNILLO	SCREW	VIS	
7	331480	2	PERFIL	PROFILE	PROFIL	
8	78210	6	TORNILLO	SCREW	VIS	
9	3074	6	ARANDELA MUELLE	SRING WASHER	RONDELLE RESSORT	
10	3900	6	ARANDELA PLANA	PLAIN WASHER	RONDELLE PLANE	
11	181184	6	TUERCA	NUT	ECROU	
12	205431	1	ESTERILLA	MATS	TAPICS	2'5 C
13	205432	1	ESTERILLA	MATS	TAPICS	2'5 ESP.
14	205433	1	ESTERILLA	MATS	TAPICS	2'5 L

150131

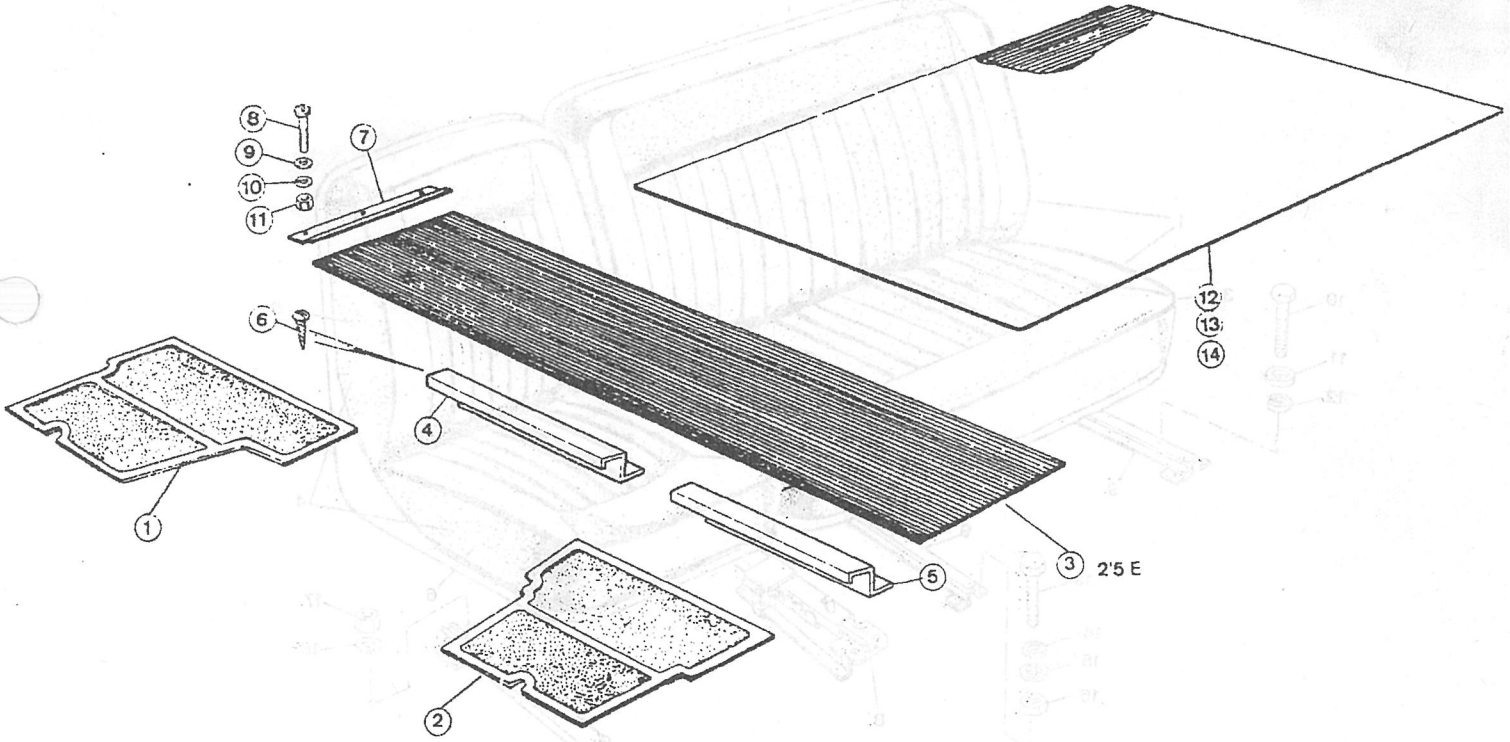

PUBLICACION N:790776
EDICION N: 1

GRUPO=15 TAPICERIA
GROUP=15 TRIM
GROUPE=15 GARNITURE

SUBGRUPO=ASIENTOS DELANTEROS
SUBGROUP=FRONT SEAT
SUBGROUPE=SIEGE AVANT

N.FIG PLATE N.FIG	N.PIEZA PARTNUMBER N.PIECE	CAN QTY OUT	DENOMINACION	DESCRIPTION	DENOMINATION	OBSERVACIONES
1	208049	1	ASIENTO DOBLE	DOUBLE SEAT	SIEGE DOUBLE	
2	208724	1	RESPALDO	BACK	DOSSIER	
3	208723	1	ASIENTO	SEAT	SIEGE	
4	208046	1	ASIENTO CONDUCTOR	DRIVE SEAT	SIEGE CHOFFEUR	
5	201925	1	RESPALDO	BACK	DOSSIER	
6	201924	1	ASIENTO	SEAT	SIEGE	
7	208041	1	GUIA	SUPPORT	SUPPORT	
8	208043	1	GUIA	SUPPORT	SUPPORT	
9	208040	2	GUIA	SUPPORT	SUPPORT	
10	182117	4	TORNILLO	BOLT	BOULON	
11	3899	4	ARANDELA PLANA	PLAIN WASHER	RONDELLE PLANA	
12	WM108001	4	ARANDELA MUELLE	SPRING WASHER	RONDELLE RESSORT	
13	78358	14	TORNILLO	BOLT	BOULON	
	78389	2	TORNILLO	BOLT	BOULON	
14	3074	16	ARANDELA MUELLE	SPRING WASHER	RONDELLE PLANA	
15	3840	16	ARANDELA PLANA	PLAIN WASHER	RONDELLE PLANA	
16	181184	16	TUERCA	NUT	ECROU	
17	181192	4	TUERCA	NUT	ECROU	
18	WM108001	4	ARANDELA MUELLE	SPRING WASHER	RONDELLE PLANA	

150206

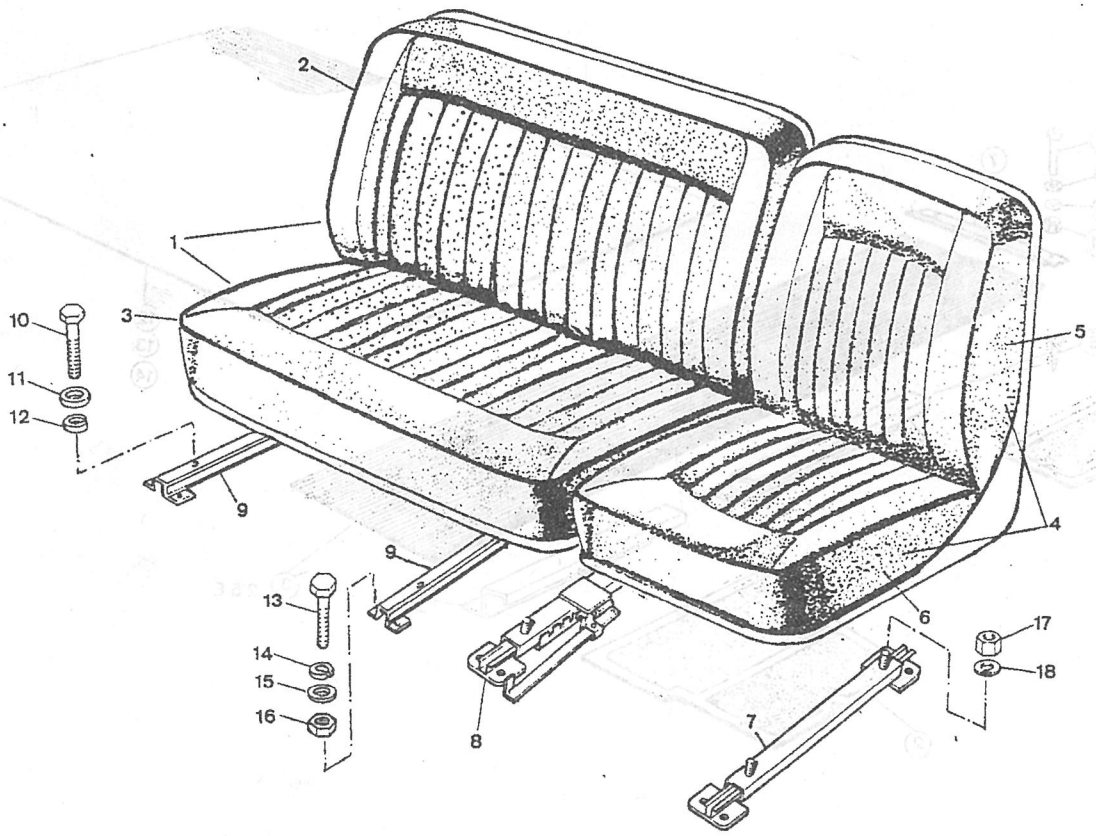

PUBLICACION N:790776 GRUPO=15 TAPICERIA SUBGRUPO=ASIENTOS DELANTEROS
EDICION N: 1 GROUP=15 TRIM SUBGROUP=FRONT SEAT
GROUPE=15 GARNITURE SUBGROUPE=SIEGE AVANT

N.FIG PLATE N.FIG	N.PIEZA PARTNUMBER N.PIECE	CAN QTY OUT	DENOMINACION	DESCRIPTION	DENOMINATION	OBSERVACIONES
1	209795	1	ASIENTO DOBLE TEJIDO	DOUBLE SEAT FABRIC	SIEGE DOUBLE TISSUE	
2	209384	1	ASIENTO CONDUC TEJID	DRIVE SEAT FABRIC	SIEGE CHOFFEUR TISSU	
3	208040	2	SOPORTE	SUPPORT	SUPPORT	
4	208043	1	SOPORTE	SUPPORT	SUPPORT	
5	208041	1	SOPORTE	SUPPORT	SUPPORT	
6	181192	4	TUERCA	NUT	ECROU	
7	WM108001	4	ARANDELA MUELLE	SPRING WASHER	RONDELLE RESSORT	
8	78358	14	TORNILLO	BOLT	BOULON	
	78389	2	TORNILLO	BOLT	BOULON	
9	3074	16	ARANDELA MUELLE	SPRING WASHER	RONDELLE RESSORT	
10	3840	16	ARANDELA PLANA	PLAIN WASHER	RONDELLE PLANE	
11	181184	16	TUERCA	NUT	ECROU	
12	182117	4	TORNILLO	BOLT	BOULON	
13	3899	4	ARANDELA PLANA	PLAIN WASHER	RONDELLE PLANE	
14	WM108001	4	ARANDELA MUELLE	SPRING WASHER	RONDELLE RESSORT	
15	737790	1	ASIDERO	HAND REST	ANSE	
16	182120	4	TORNILLO	BOLT	BOULON	
17	3830	4	ARANDELA PLANA	PLAIN WASHER	RONDELLE PLANE	
18	WM108001	4	ARANDELA MUELLE	SPRING WASHER	RONDELLE RESSORT	
19	209129	1	ASIENTO CENTRAL	CENTRE SEAT	SIEGE CENTRAL	
20	193945	3	RESPALDO	BACK	DOSSIER	
21	193946	3	ASIENTO	SEAT	SIEGE	
22	203430	2	PALANCA	LEVER	LEVIER	
23	194577	2	MUELLE	SPRING	RESSORT	
24	255209	8	TORNILLO	BOLT	BOULON	
25	3900	8	ARANDELA PLANA	PLAIN WASHER	RONDELLE PLANE	
26	3074	8	ARANDELA MUELLE	SPRING WASHER	RONDELLE RESSORT	
27	181184	8	TUERCA	NUT	ECROU	
28	237121	8	TORNILLO	BOLT	BOULON	
29	088190	8	ARANDELA ESTRELLA	STAR WASHER	RONDELLE DE ETOILE	
30	180124	8	TUERCA	NUT	ECROU	
31	193772	2	PESTILLO	LATCH	VERROU	
32	155086	2	PLACA	PLATE	PLAQUE	
33	155085	2	SOPORTE	SUPPORT	SUPPORT	
34	301346	2	TOPE GOMA	STOP-RUBBER	CHOC CAOUTCHOUC	
35	203384	1	ASIENTO	SEAT	SIEGE	
36	203385	1	RESPALDO	BACK	DOSSIER	
37	193940	1	ASIENTO	SEAT	SIEGE	
38	193941	1	RESPALDO	BACK	DOSSIER	

150213

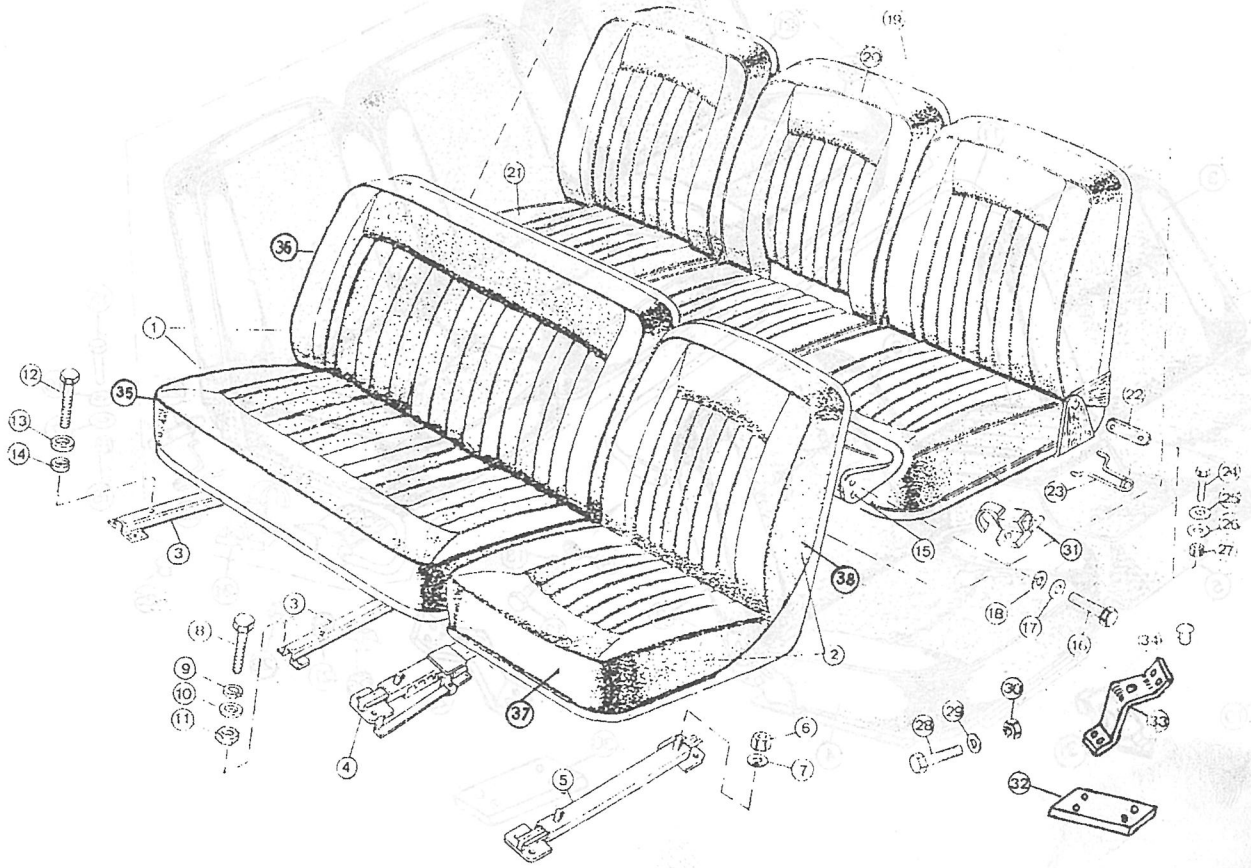

PUBLICACION N:790776 GRUPO=15 TAPICERIA SUBGRUPO=ASIENTOS DELANTEROS
EDICION N: 1 GROUP=15 TRIM SUBGROUP=FRONT SEAT
GROUPE=15 GARNITURE SUBGROUPE=SIEGE AVANT

N.FIG PLATE N.FIG	N.PIEZA PARTNUMBER N.PIECE	CAN QTY OUT	DENOMINACION	DESCRIPTION	DENOMINATION	OBSERVACIONES
1	738312	1	CONJ.ASIENTO TEJI.LD	SEAT ASSY FABRIC RH	ENS SIEGE TISSU CD	
2	738311	1	CONJ.ASIENTO TEJI.LI	SEAT ASSY FABRIC LH	ENS SIEGE TISSU CG	
3	790808	1	CONJ.RESPALDO L/D	SEAT BACK ASSY RH	ENSEMBLE DOSSIER CD	
	790809	1	CONJ.RESPALDO L/I	SEAT BACK ASSY LH	ENSEMBLE DOSSIER CG	
4	790810	2	CONJ.ASIENTO	SEAT ASSY	ENSEMBLE SIEGE	
5	730521	1	CAJA	BOX	BOITTE	
6	78389	16	TORNILLO	BOLT	BOULON	
7	3840	4	ARANDELA PLANA	PLAIN WASHER	RONDELLE PLANE	
8	3074	4	ARANDELA MUELLE	SPRING WASHER	RONDELLE RESSORT	
9	181184	4	TUERCA	NUT	ECROU	
10	208386	6	PLACA CON TUERCAS	PLATE WITH NUTS	PLAQUE AVEC ECROUS	
11	205466	1	ASIDERO	HAND REST	ANSE	
12	182120	4	TORNILLO	BOLT	BOULON	
13	3830	4	ARANDELA PLANA	PLAIN WASHER	RONDELLE PLANE	
14	WM108001	4	ARANDELA MUELLE	SPRING WASHER	RONDELLE RESSORT	
15	255209	8	TORNILLO	BOLT	BOULON	
16	3900	8	ARANDELA PLANA	PLAIN WASHER	RONDELLE PLANE	
17	3074	8	ARANDELA MUELLE	SPRING WASHER	RONDELLE RESSORT	
18	181184	8	TUERCA	NUT	ECROU	
19	738083	1	ASIENTO CENTRAL	CENTRE SEAT	SIEGE CENTRAL	2500 L
20	790915	3	ASIENTO	SEAT	SIEGE	
21	790916	3	RESPALDO	BACK	DOSSIER	
22	203430	2	PALANCA	LEVER	LEVIER	
23	194577	2	MUELLE	SPRING	RESSORT	
24	193772	2	PESTILLO	LATCH	VERROU	
25	301346	2	TOPE GOMA	STOP-RUBBER	CHOC CAOUTCHOUC	
26	237121	8	TORNILLO	BOLT	BOULON	
27	088190	8	ARANDELA ESTRELLA	STAR WASHER	RONDELLE DE ETOILE	
28	180124	8	TUERCA	NUT	ECROU	
29	155085	2	SOPORTE	SUPPORT	SUPPORT	
30	155086	2	PLACA	PLATE	PLAQUE	
31	205206	4	ENGANCHE	JOINT COUPLING	ACCROCEMENT SIEGE	

150218

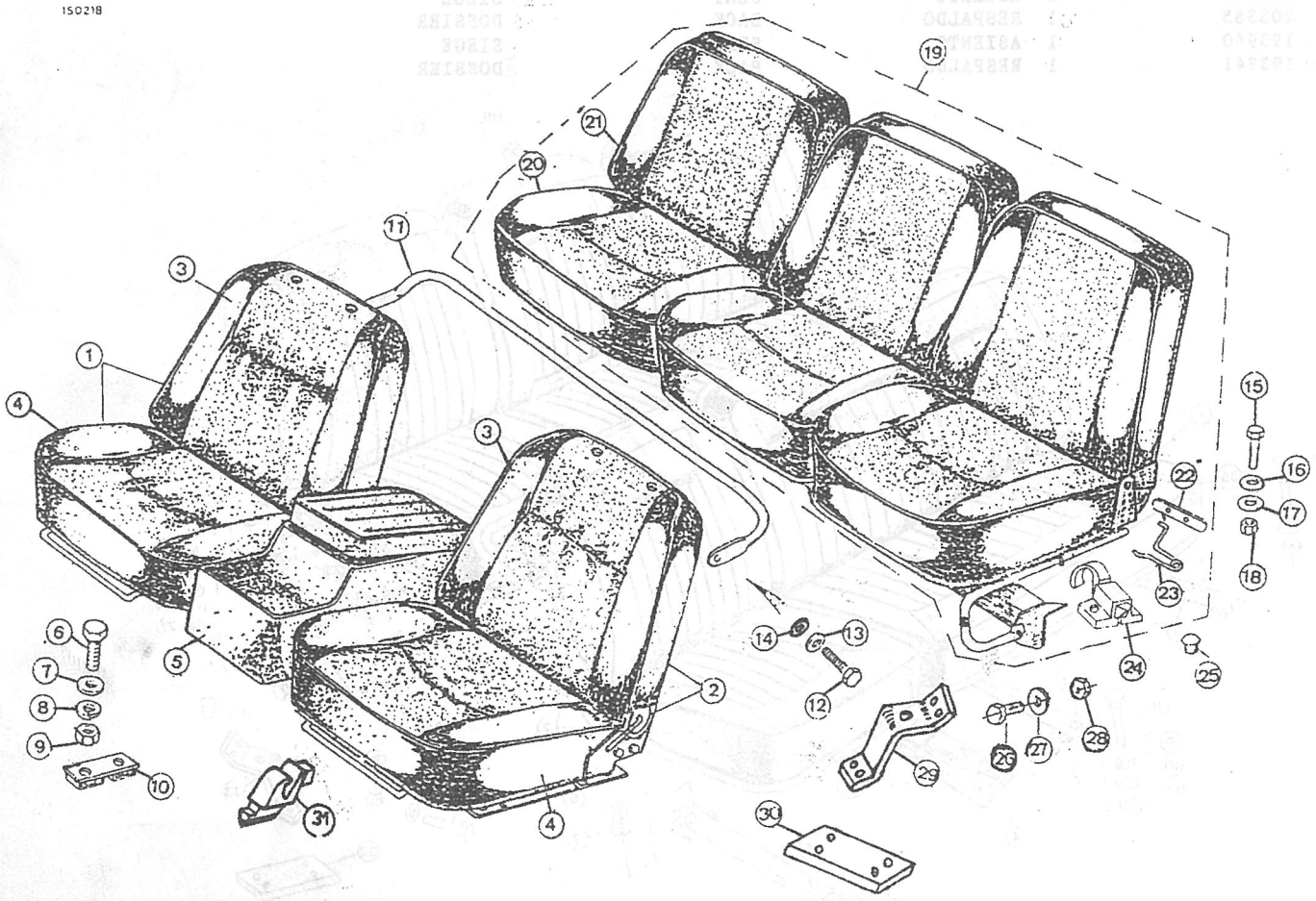

PUBLICACION N:790776 GRUPO=15 TAPICERIA SUBGRUPO=ASIENTOS LATERALES
EDICION N: 1 GROUP=15 TRIM SUBGROUP=SIDE SEAT
GROUPE=15 GARNITURE SUBGROUPE=SIEGE LATERALE

N.FIG PLATE N.FIG	N.PIEZA PARTNUMBER N.PIECE	CAN QTY OUT	DENOMINACION	DESCRIPTION	DENOMINATION	OBSERVACIONES
1	738082	4	CONJ.ASIENTO	SEAT ASSY	ENS SIEGE	
2	790917	4	RESPALDO	BACK	DOSSIER	
3	790918	4	ASIENTO	SEAT	SIEGE	
4	207397	1	SOPORTE LI	SUPPORT LH	SUPPORT CG	
	207398	1	SOPORTE LD	SUPPORT RH	SUPPORT CD	
5	207337	4	CIERRE	CLOSING	ARRET	
6	193673	4	MUELLE	SPRING	RESSORT	

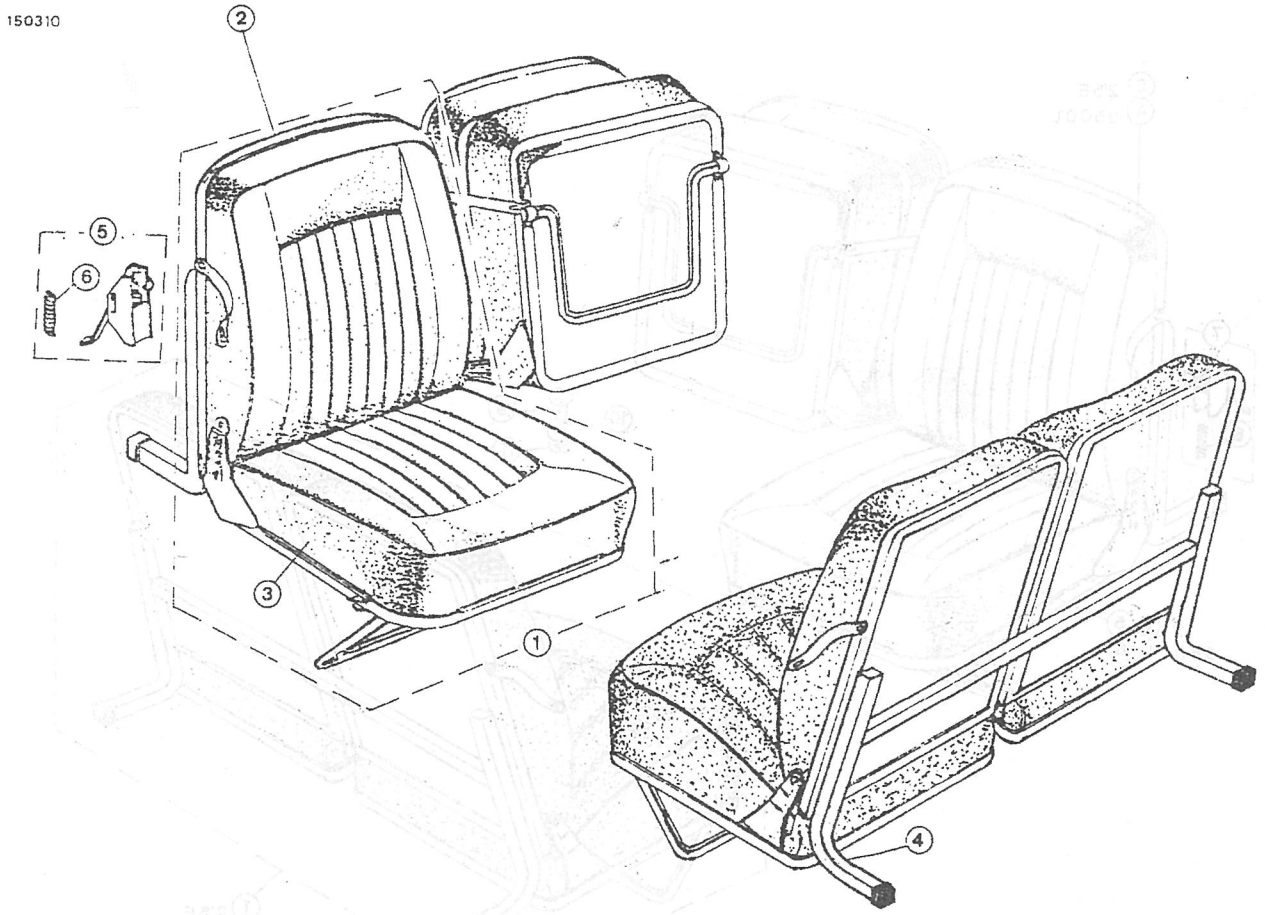

PUBLICACION N:790776 GRUPO=15 TAPICERIA SUBGRUPO=ASIENTOS LATERALES
EDICION N: 1 GROUP=15 TRIM SUBGROUP=SIDE SEAT
GROUPE=15 GARNITURE SUBGROUPE=SIEGE LATERALE

N.FIG PLATE N.FIG	N.PIEZA PARTNUMBER N.PIECE	CAN QTY OUT	DENOMINACION	DESCRIPTION	DENOMINATION	OBSERVACIONES
1	209140	1	CONJ ASIENTO LD	SEAT ASSY RH	JEU DE SIEGES CD	2'5 ESP.
	209141	1	CONJ ASIENTO LI	SEAT ASSY LH	JEU DE SIEGES CG	2'5 ESP.
2	738080	1	CONJ.ASIENTO L/I	SEAT ASSY LH	JEU DE SIEGES CG	2500 L
	738081	1	CONJ.ASIENTO L/D	SEAT ASSY RH	JEU DE SIEGES CD	2500 L
3	201936	4	RESPALDO	BACK	DOSSIER	2'5 ESP.
4	730520	4	RESPALDO	BACK	DOSSIER	2500 L
5	201935	4	ASIENTO	SEAT	SIEGE	2'5 ESP.
6	730519	4	ASIENTO	SEAT	SIEGE	2500 L
7	207337	4	CIERRE	CLOSING	ARRET	
8	193673	4	MUELLE	SPRING	RESSORT	
9	255045	8	TORNILLO	BOLT	BOULON	
10	2251	8	ARANDELA PLANA	PLAIN WASHER	RONDELLE PLANE	
11	180426	8	ARANDELA MUELLE	SPRING WASHER	RONDELLE RESSORT	

150312

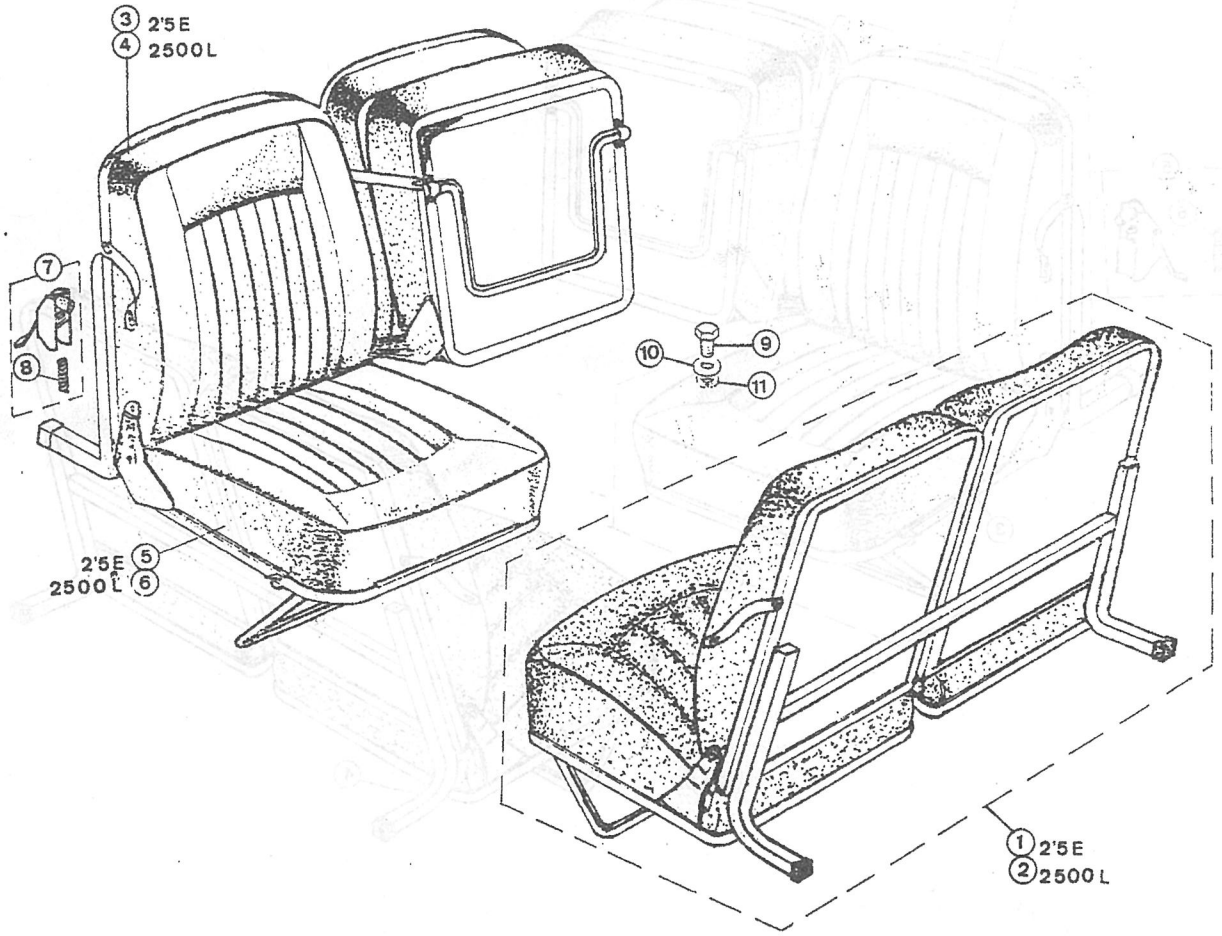

GRUPO 16 16 ACCESORIOS

GROUP 16 16 ACCESOIRES

GROUP 16 16 ACCESSOIRES

COMPOSICION.....COMPOSITION.....COMPOSICION

REFERENCIA PARTNUMBER NUM.PIECE	DENOMINACION	DESCRIPTION	DENOMINATION
160104	EQUIPO LAVAPARABRISA	WASHER SET	ESSUIE GLASSE
160106	EQUIPO LAVAPARABRISA	WASHER SET	ESSUIE GLASSE
160210	CINTURONES DE SEGURI	SAFETY HARNESS AND	CEINTURE LATERAL
160311	RETROVISOR	MIRROR	RETROVISE
160408	PARASOL	SUN VISOR	PARESOLEIL
160424	FALDONES DELANTEROS	FRONT MUD FLAPS	RUBBER JUPE

PUBLICACION 790776 EDIC = 1

PUBLICACION N:790776 GRUPO-16 ACCESORIOS SUBGRUPO-EQUIPO LAVAPARABRISA
EDICION N: 1 GROUP-16 ACCESOIRES SUBGROUP-WASHER SET
GROUPE-16 ACCESSOIRES SUBGROUPE-ESSUIE GLASSE

N.FIG PLATE N.FIG	N.PIEZA PARTNUMBER N.PIECE	CAN QTY OUT	DENOMINACION	DESCRIPTION	DENOMINATION	OBSERVACIONES
1	38400E80000	1	DEPOSITO	BATTLE	BOUTILLE	
2	00000A00281	1	BOMBA ELECTRICA	ELECTRIC PUMP	POMPE ELECTRIQUE	
3	182113	2	TORNILLO	SCREW	VIS	
4	3840	2	ARANDELA	WASHER	RONDELLE	
5	3074	2	ARANDELA	WASHER	RONDELLE	
6	181184	2	TUERCA	NUT	ECROU	
7	790359	1	VALVULA TRASERA	REAR VALVE	SOUPAPE ARRIERE	
8	PRC5736	1	INYECTOR DELANTERO	FRONT INJECTOR	INYECTEUR AVANT	
9	555711	1	GOMA	RUBBER	CAOUTCHOUC	

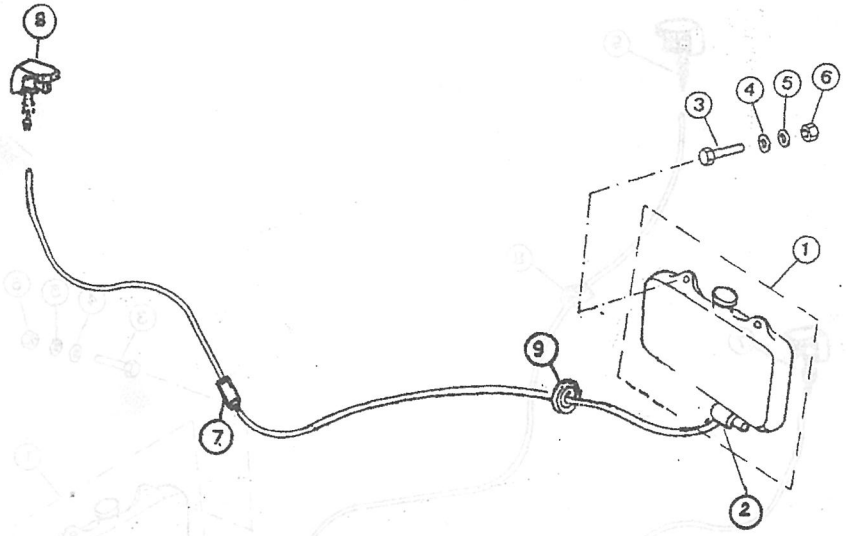

PUBLICACION N:790776 GRUPO=16 ACCESORIOS SUBGRUPO=EQUIPO LAVAPARABRISA
EDICION N: 1 GROUP=16 ACCESOIRES SUBGROUP=WASHER SET
GROUPE=16 ACCESSOIRES SUBGROUPE=ESSUIE GLASSE

N.FIG PLATE N.FIG	N.PIEZA PARTNUMBER N.PIECE	CAN QTY OUT	DENOMINACION	DESCRIPTION	DENOMINATION	OBSERVACIONES
1	737774	1	DEPOSITO LAVAPARABRI	RESERVOIR WASH	BOUTILLE ESSVIE GLAS	
2	790274	1	BOMBA ELECTRICA	ELECTRIC PUMP	POMPE ELECTRIQUE	
3	182113	2	TORNILLO	SCREW	VIS	
4	3840	4	ARANDELA PLANA	PLAIN WASHER	RONDELLE PLANE	
5	3074	2	ARANDELA MUELLE	SPRING WASHER	RONDELLE RESSORT	
6	181184	2	TUERCA	NUT	ECROU	
7	PRC5736	1	INYECTOR DELANTERO	FRONT INJECTOR	INYECTEUR AVANT	
8	790359	1	VALVULA TRASERA	REAR VALVE	SOUPAPE ARRIERE	
9	PRC5802	1	INYECTOR TRASERO	REAR INJECTOR	INYECTEUR ARRIERE	

160106

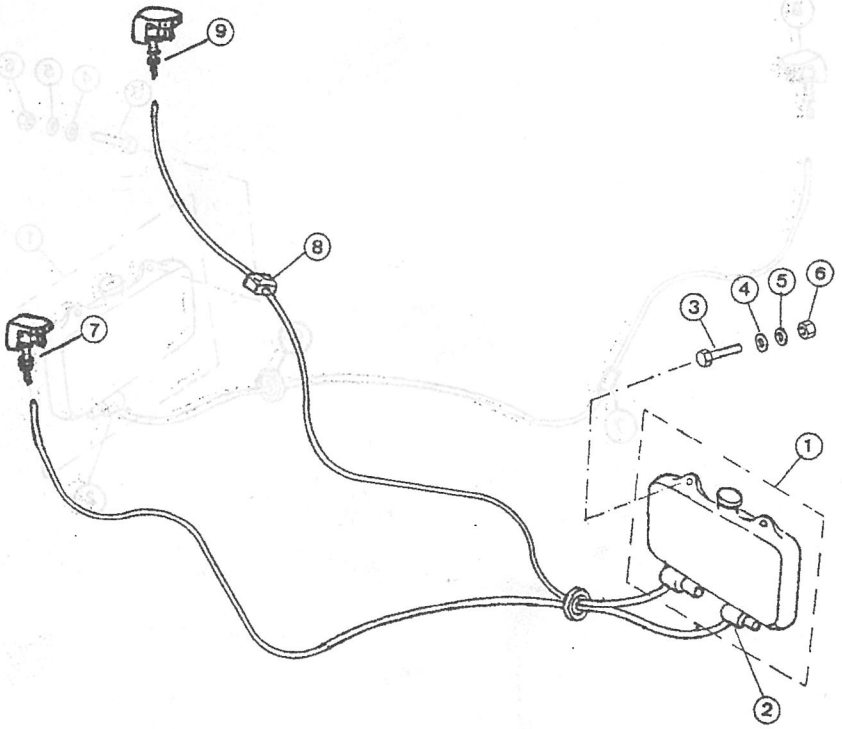

PUBLICACION N:790776
EDICION N: 1

GRUPO=16 ACCESORIOS
GROUP=16 ACCESOIRES
GROUPE=16 ACCESSOIRES

SUBGRUPO=CINTURONES DE SEGURI
SUBGROUP=SAFETY HARNESS AND
SUBGROUPE=CEINTURE LATERAL

N.FIG PLATE N.FIG	N.PIEZA PARTNUMBER N.PIECE	CAN QTY OUT	DENOMINACION	DESCRIPTION	DENOMINATION	OBSERVACIONES
1	738302	2	CINTURON DE INERCIA	INERTIA HARNESS	CEINTURE DE INERTIE	
2	205451	2	SOPORTE	SUPPORT	SUPPORT	
3	737653	2	SOPORTE	SUPPORT	SUPPORT	
4	255466	4	TORNILLO	BOLT	BOULON	
5	72001E1	4	ARANDELA ESTRELLA	STOR WASHER	RONDELLE ETOILE	
6	3843	2	ARANDELA PLANA	PLAIN WASHER	RONDELLE PLANE	
7	SH108201	4	TORNILLO	BOLT	BOULON	
8	3899	4	ARANDELA PLANA	PLAIN WASHER	RONDELLE PLANE	
9	WM108001	4	ARANDELA MUELLE	SPRING WASHER	RONDELLE RESSORT	
10	737665	2	SUPORTE	SUPPORT	SUPPORT	
11	182118	4	TORNILLO	BOLT	BOULON	
12	3899	8	ARANDELA PLANA	PLAIN WASHER	RONDELLE PLANE	
13	WM108001	4	ARANDELA MUELLE	SPRING WASHER	RONDELLE RESSORT	
14	181185	4	TUERCA	NUT	ECROU	

160210

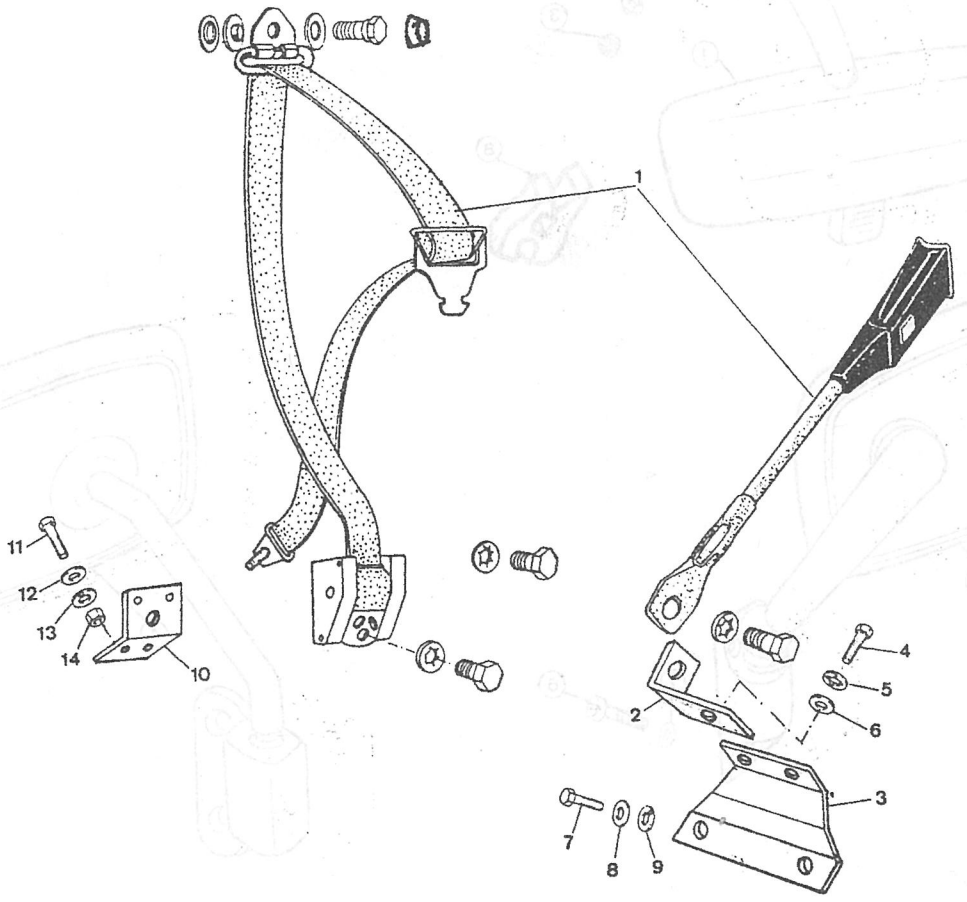

PUBLICACION N:790776 GRUPO=16 ACCESORIOS SUBGRUPO=RETROVISOR
EDICION N: 1 GROUP=16 ACCESOIRES SUBGROUP=MIRROR
GROUPE=16 ACCESSOIRES SUBGROUPE=RETROVISE

N.FIG PLATE N.FIG	N.PIEZA PARTNUMBER N.PIECE	CAN QTY OUT	DENOMINACION	DESCRIPTION	DENOMINATION	OBSERVACIONES
1	737778	1	ESPEJO RETROVISOR	MIRROR	RETROVISEUR	
2	02132A04155	2	TORNILLO	BOLT	BOULON	
3	86124A63010	2	TAPON	PLUG	BOUCHON	
4	206889	1	ESPEJO RETROVISOR LI	MIRROR LH	RETROVISEUR CG	2'5 C-2'5 L-2'5E
	206890	1	ESPEJO RETROVISOR LD	MIRROR RH	RETROVISEUR CD	2'5 C-2'5 L-2'5E
5	730006	1	ESPEJO RETROVISOR LD	MIRROR RH	RETROVISEUR CD	2500 C-2500 L
	730007	1	ESPEJO RETROVISOR LI	MIRROR LH	RETROVISEUR CG	2500 C-2500 L
6	SE604071	4	TORNILLO	BOLT	BOULON	
7	MRC1979	4	ARANDELA	WASHER	RONDELLE	
8	737895	1	GOMA	RUBBER	CAOUTCHOUC	

760311

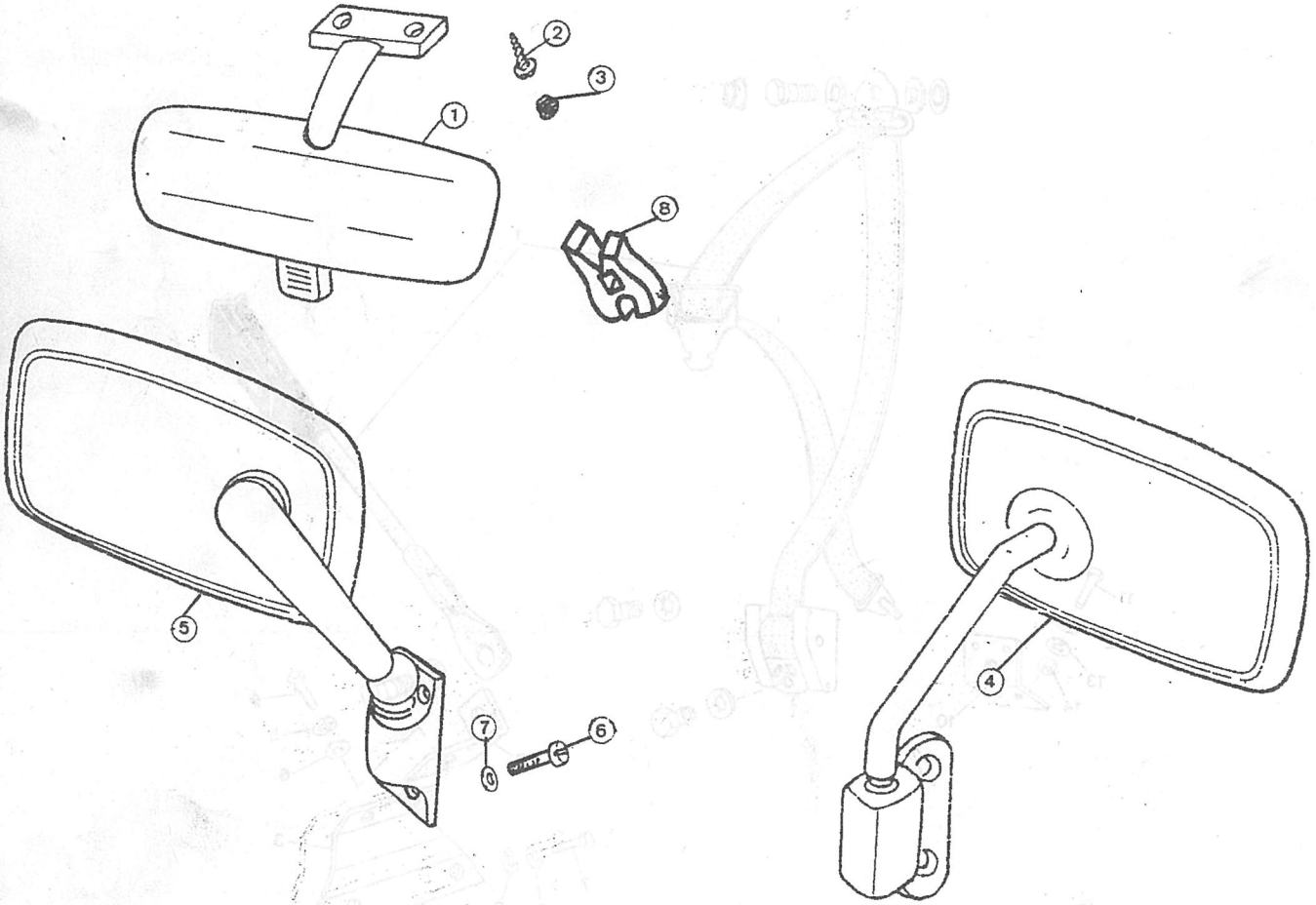

PUBLICACION N:790776
EDICION N: 1

GRUPO=16 ACCESORIOS
GROUP=16 ACCESOIRES
GROUPE=16 ACCESSOIRES

SUBGRUPO=PARASOL
SUBGROUP=SUN VISOR
SUBGROUPE=PARESOLEIL

N.FIG PLATE N.FIG	N.PIEZA PARTNUMBER N.PIECE	CAN QTY OUT	DENOMINACION	DESCRIPTION	DENOMINATION	OBSERVACIONES
1	MTC5698	1	PARASOL LD	SUN VISR RH	PARESOLEIL CD	
2	MTC5699	1	PARASOL LI	SUN VISOR LH	PARESOLE IL CG	
3	189517	4	TORNILLO	BOLT	BOULON	
4	3852	4	ARANDELA PLANA	PLAIN WASHER	RONDELLE PLANE	

160408

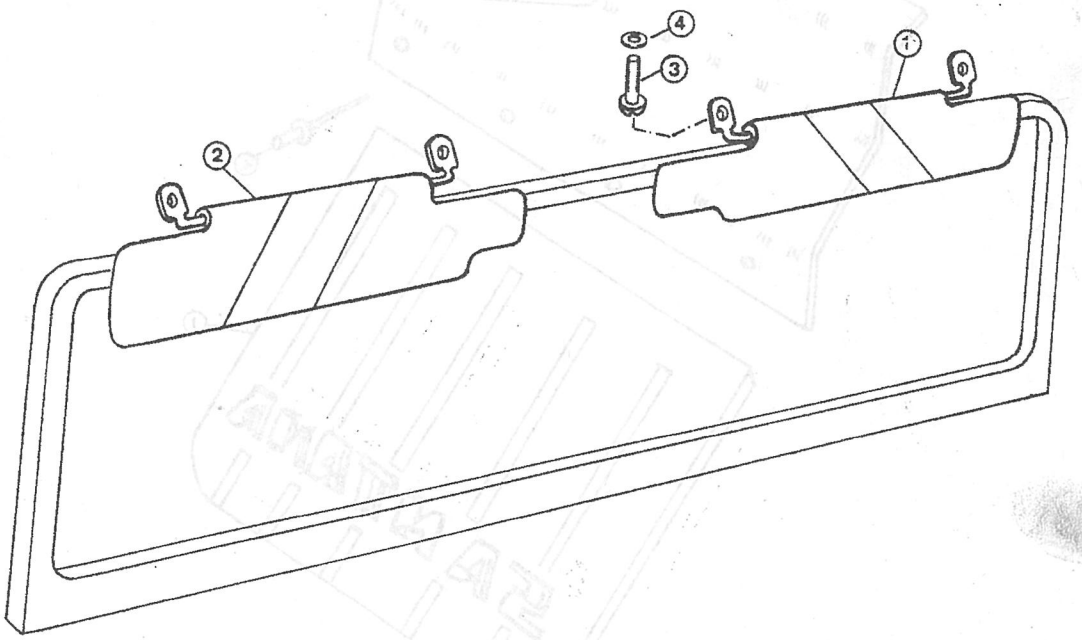

PUBLICACION N:790776 GRUPO=16 ACCESORIOS SUBGRUPO=FALDONES DELANTEROS
EDICION N: 1 GROUP=16 ACCESOIRES SUBGROUP=FRONT MUD FLAPS
GROUPE=16 ACCESSOIRES SUBGROUPE=RUBBER JUPE

N.FIG PLATE N.FIG	N.PIEZA PARTNUMBER N.PIECE	CAN QTY OUT	DENOMINACION	DESCRIPTION	DENOMINATION	OBSERVACIONES
1	730330	2	FALDON	FLAP	JUPE	
2	730331	1	SOPORTE L/I	SUPPORT LH	SUPPORT CG	
	730332	1	SOPORTE L/D	SUPPORT RH	SUPPORT CD	
3	184255	8	ARANDELA PLANA	PLAIN WASHER	RONDELLE PLANE	
4	183205	8	REMACHE	RIVET	RIVET	

160424

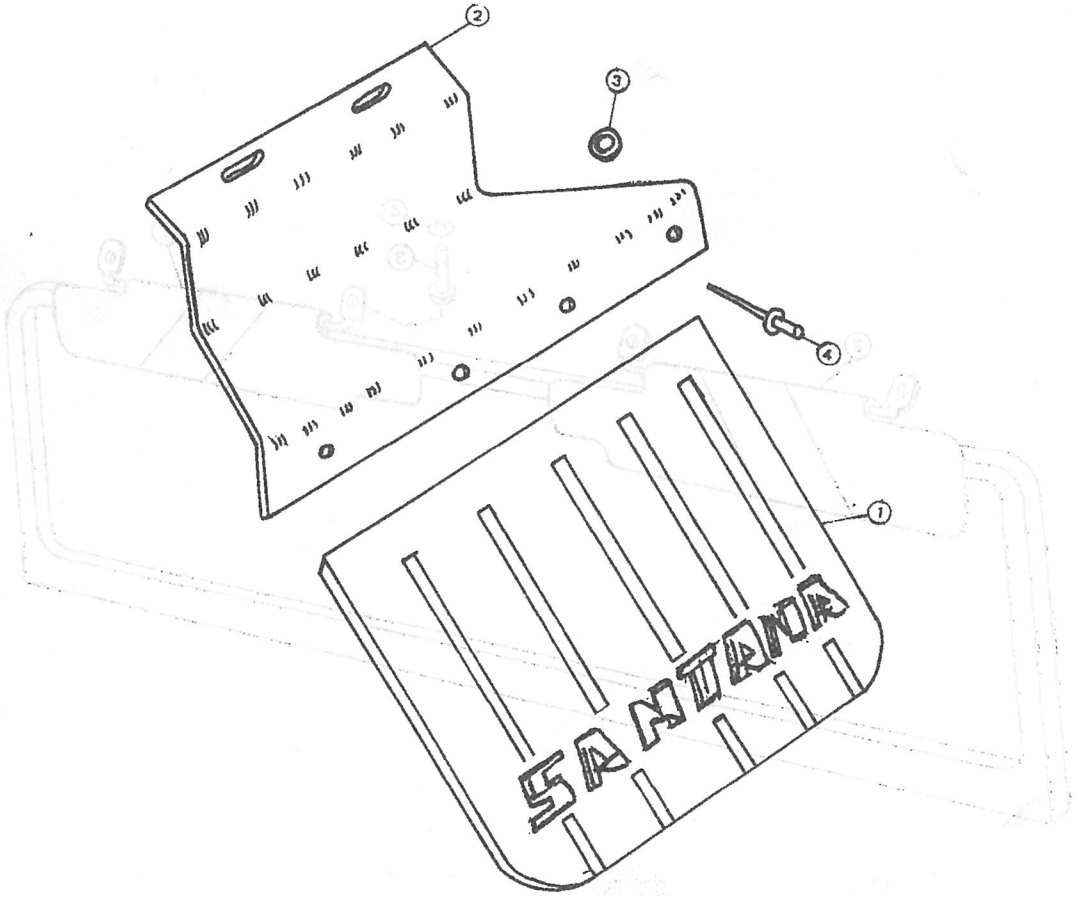

GRUPO 17 17 HERRAMIENTAS

GROUP 17 17 TOOLS

GROUP 17 17 OUTILS

COMPOSICION.....COMPOSITION.....COMPOSICION

REFERENCIA PARTNUMBER NUM.PIECE	DENOMINACION	DESCRIPTION	DENOMINATION
170115	HERRAMIENTAS	TOOLS	OUTILS
170127	MATERIALES REPARACIO	REPAIR MATERIALS	MATERIEL DE REPARATI

PUBLICACION N:790776 GRUPO=17 HERRAMIENTAS SUBGRUPO=HERRAMIENTAS
EDICION N: 1 GROUP=17 TOOLS SUBGROUP=TOOLS
GROUPE=17 OUTILS SUBGROUPE=OUTILS

N.FIG PLATE N.FIG	N.PIEZA PARTNUMBER N.PIECE	CAN QTY OUT	DENOMINACION	DESCRIPTION	DENOMINATION	OBSERVACIONES
1	162961	1	LLAVE	BENT SOCKET WRENCH	CLE A DOVILLE COUDEE	
2	278345F1	1	GATO ELEVADOR 2 T	KACK 2 T	CRIC 2 T	
3	2703E1	1	ALICATE	COMBINATIONS PLIERS	PINCES MULTIPLES	H 5-86
4	234619E1	1	DESTORNILLADOR	SCREW DRIWER	TOURNEVIS	H 4-86
5	162952	1	DESTORNILLADOR	SCREW DRIWER	TOURNEVIS	H 5-86
6	162966	1	DESTORNILLADOR	SCREW DRIWER	TOURNEVIS	H 4-86
7	160979	1	LLAVE 8 9	SPANNER 8 9	CLE 8 9	
	162979	1	LLAVER 11 14	SPANNER 11 14	CLE 11 14	
	162980	1	LLAVE 16 19	SPANNER 16 19	CLE 16 19	H 5-86
8	219704E1	1	BOLSA DE HERRAMIENTA	TOOL BAG	TROUSSE A OUTILS	
9	09814A00007	1	MANGO	HANDLE	BOUTON	D 5-86
10	09814A00001	1	DESTORNILLADOR DOBLE	DOUBLE SCREW DIWER	TOURNEVIS DOUBLE	D 5-86

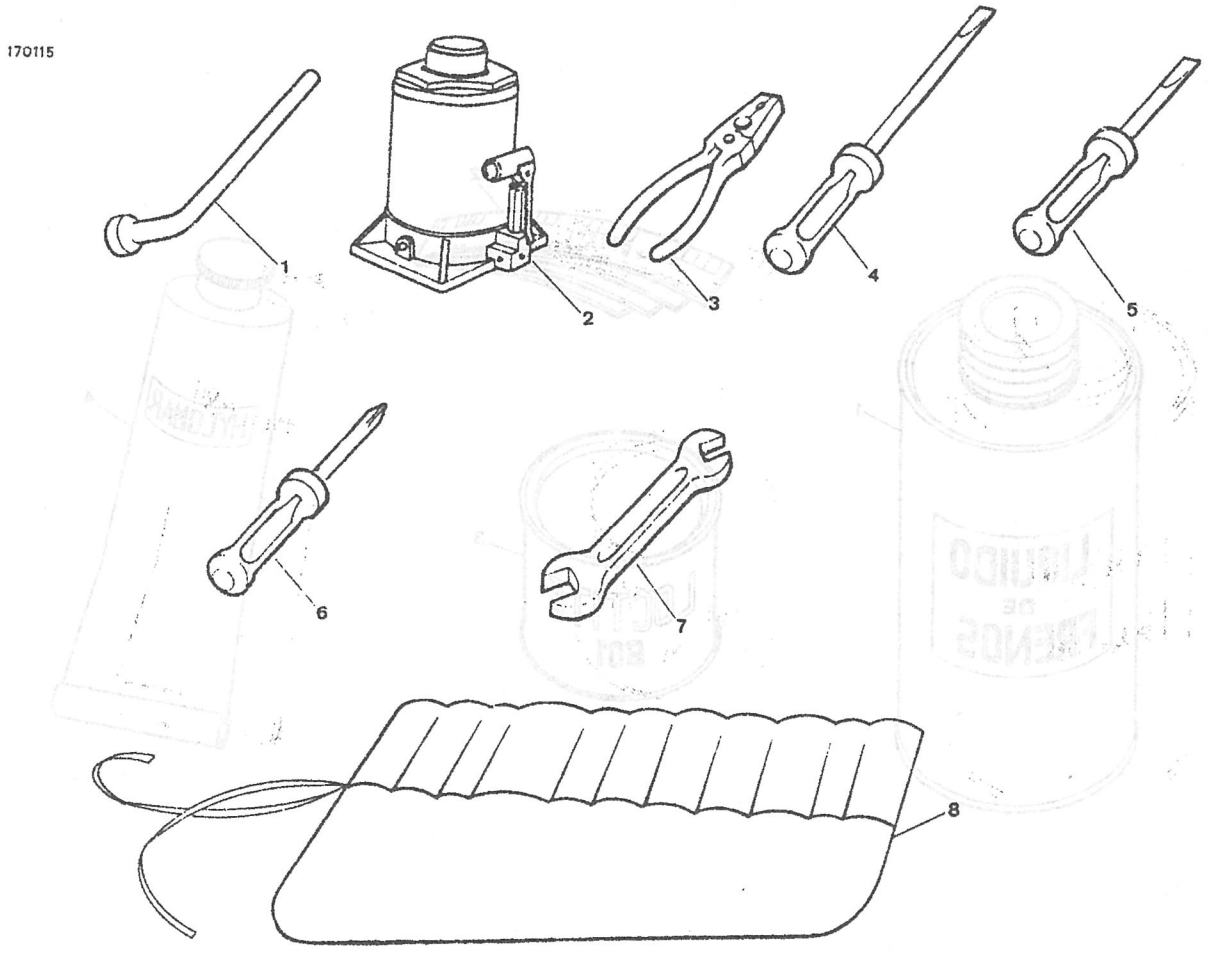

PUBLICACION N:790776 GRUPO=17 HERRAMIENTAS SUBGRUPO=MATERIALES REPARACIO
EDICION N: 1 GROUP=17 TOOLS SUBGROUP=REPAIR MATERIALS
GROUPE=17 OUTILS SUBGROUPE=MATERIEL DE REPARATI

N.FIG PLATE N.FIG	N.PIEZA PARTNUMBER N.PIECE	CAN QTY OUT	DENOMINACION	DESCRIPTION	DENOMINATION	OBSERVACIONES
1	194743	S-N	LIQUIDO FRENOS 625CC	BRAKE FLUID 625 CC	LIQUIDE DE FRE 625CC	
	194744	S-N	LI 625 CC 24 UNIDADE	BRAK 625CC BOX OF 24	LIQUIDE BOITE DE 24	
2	605238	S-N	HILO ESPESORES 24 UN	PLASTIGAUGE STRIP	FILAMENT DE EPAISSEU	
3	606146	S-N	LOCTITE	LOCTITE	LOCTITE	
4	534244	S-N	PASTA HYLOMAR	HYLOMAR SEALING COMP	PATE HYLOMAR	
5	270656	S-N	SILICONA	SILICONE	SILICONE	

170127

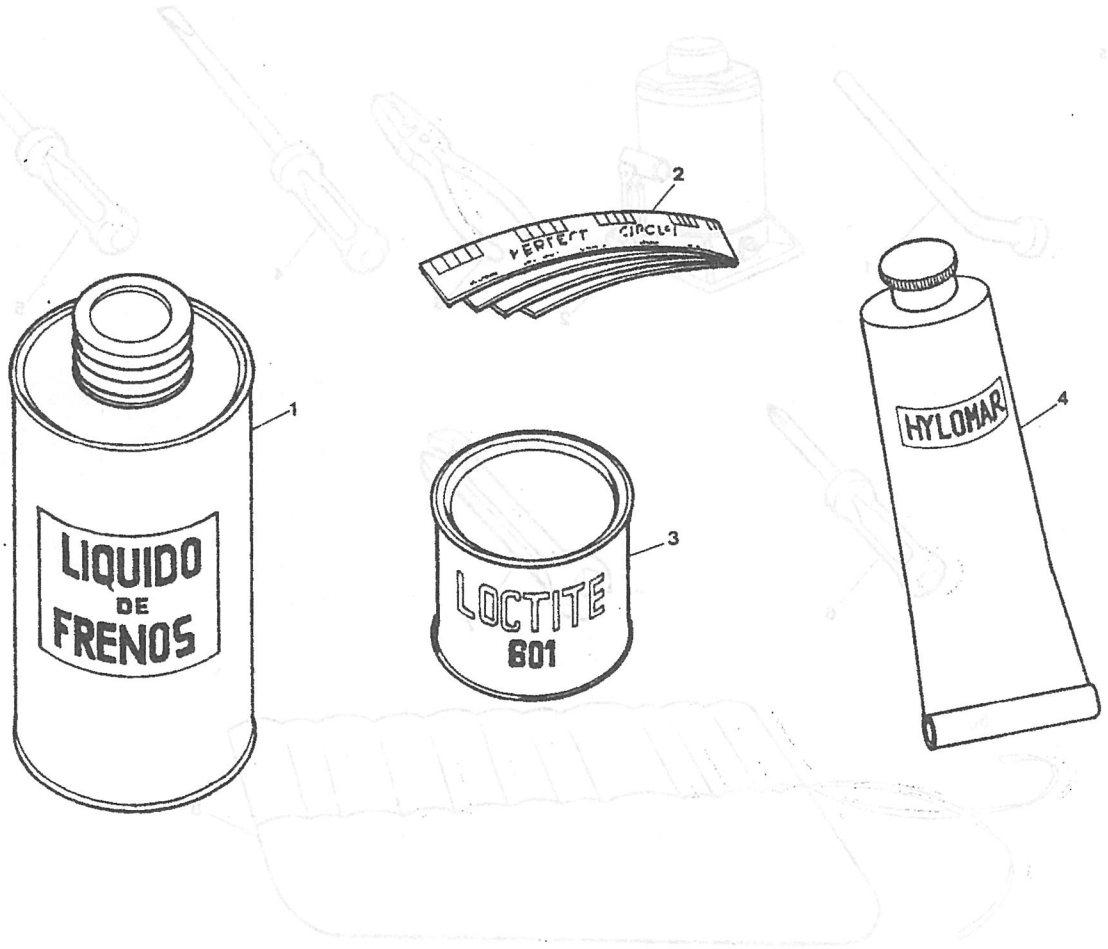

GRUPO 18 18 EXTRA

GROUP 18 18 EXTRA

GROUP 18 18 EXTRA

COMPOSICION.....COMPOSITION.....COMPOSICION

REFERENCIA PARTNUMBER NUM.PIECE	DENOMINACION	DESCRIPTION	DENOMINATION
150304	ASIENTOS LATERALES	SIDE SEAT	SIEGE LATERAL

PUBLICACION N:790776 GRUPO=18 EXTRA SUBGRUPO=ASIENTOS LATERALES
EDICION N: 1 GROUP=18 EXTRA SUBGROUP=SIDE SEAT
GROUPE=18 EXTRA SUBGROUPE=SIEGE LATERAL

N.FIG PLATE N.FIG	N.PIEZA PARTNUMBER N.PIECE	CAN QTY OUT	DENOMINACION	DESCRIPTION	DENOMINATION	OBSERVACIONES
1	191724	1	CONJ ASIENTOS CORRID	EXPERT SEAR ASSY	ENS SIEGES COURU	
2	207072	1	ASIENTO L I	SEAT L H	SIEGE C G	
	207338	1	ASIENTO L D	SEAR R H	SIEGE C D	
3	194345	2	RESPALDO	BACK	DOSSIER	
4	194344	2	ASIENTO	SEAT	SIEGE	
5	330419	6	GOMA	RUBBER	CAOUTCHOUC	
6	78137	6	TORNILLO	SCREW	VIS	
7	851317	6	ARANDELA	WASHER	RONDELLE	
8	207337	4	CIERRE	CLOSING	ARRET	
9	193673	4	MUELLE	SPRING	RESSORT	
10	255045	4	TORNILLO	BOLT	BOULON	
11	180426	4	ARANDELA	WASHER	RONDELLE	
12	2251	4	ARANDELA	WASHER	RONDELLE	

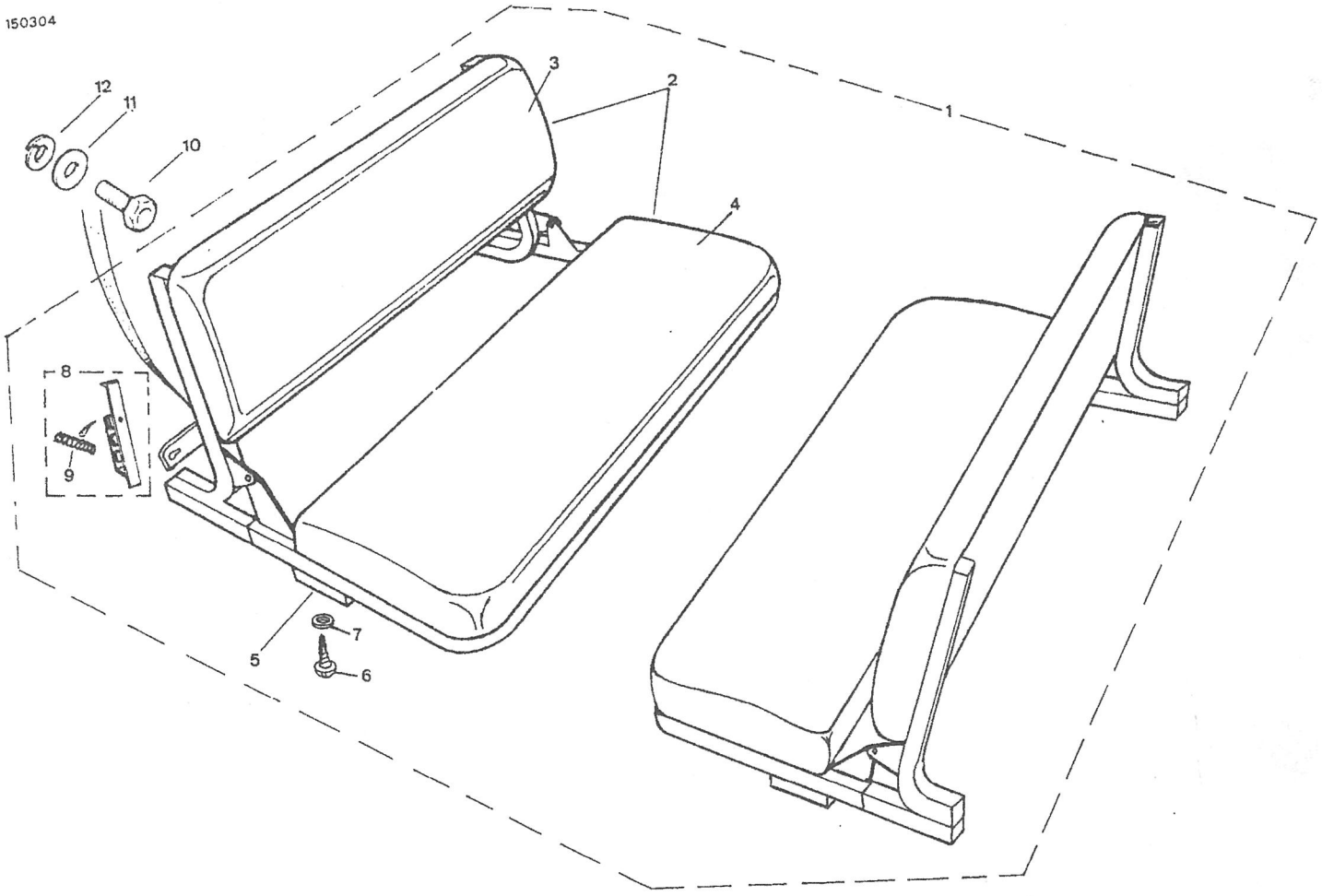

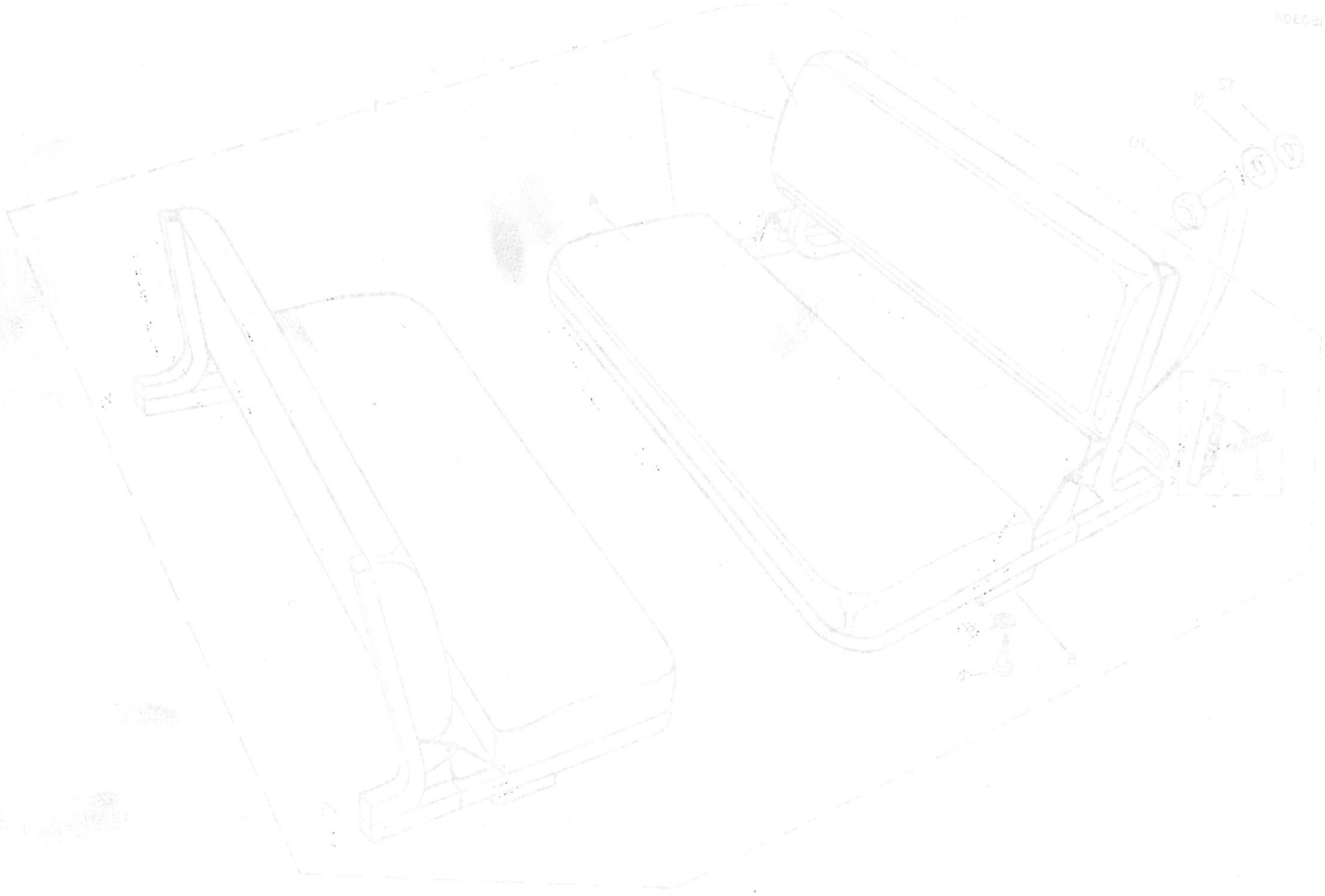

GRUPO 19 19 JUEGOS DE REPARAC

GROUP 19 19 REPAIR KIT

GROUP 19 19 JEU DE REPARATION

COMPOSICION.....COMPOSITION.....COMPOSICION

REFERENCIA PARTNUMBER NUM.PIECE	DENOMINACION	DESCRIPTION	DENOMINATION
190017	JUEGO REPARACI MOTOR	ENGINE REPAIR KIT	JEU DE REP MOTEUR
190018	JUEGO REPARACI. C.CAMBIO	GEAR BOX REPAIR KIT	JEU DE REP BOITE VIT

PUBLICACION N:790776 GRUPO=19 JUEGOS DE REPARAC SUBGRUPO=JUEGO REPARACI MOTOR
EDICION N: 1 GROUP=19 REPAIR KIT SUBGROUP=ENGINE REPAIR KIT
GROUPE=19 JEU DE REPARATION SUBGROUPE=JEU DE REP MOTEUR

N.FIG PLATE N.FIG	N.PIEZA PARTNUMBER N.PIECE	CAN QTY OUT	DENOMINACION	DESCRIPTION	DENOMINATION	OBSERVACIONES
1	790294	1	JUEGO DE JUNTAS	GASKET KIT	JEU DE JOINTS	
2	191912	1	JUEGO DE JUNTAS	GASKET KIT	JEU DE JOINTS	
3	790295	1	JUEGO DE JUNTAS	GASKET KIT	JEU DE JOINTS	
4	191913	1	JUEGO DE JUNTAS	GASKET KIT	JEU DE JOINTS	

190017

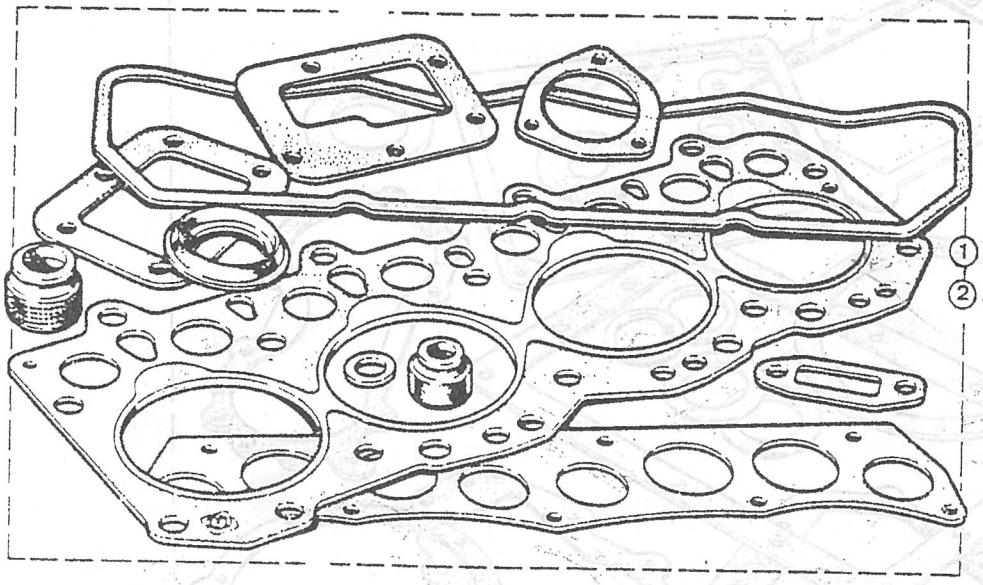

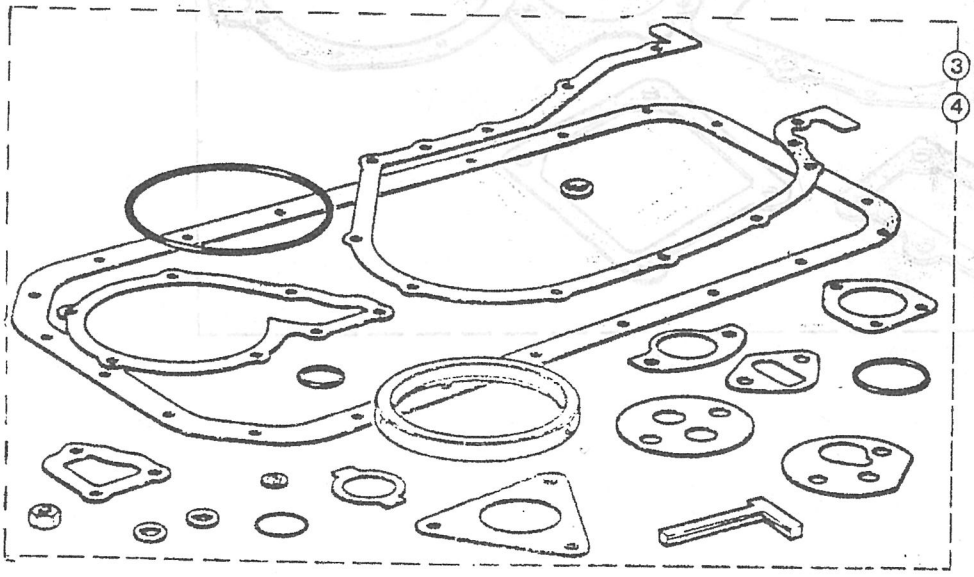

PUBLICACION N:790776 GRUPO=19 JUEGOS DE REPARAC SUBGRUPO=JUEGO REPAR C CAMBIO
EDICION N: 1 GROUP=19 REPAIR KIT SUBGROUP=GEAR BOX REPAIR KIT
GROUPE=19 JEU DE REPARATION SUBGROUPE=JEU DE REP BOITE VIT

N.FIG PLATE N.FIG	N.PIEZA PARTNUMBER N.PIECE	CAN QTY OUT	DENOMINACION	DESCRIPTION	DENOMINATION	OBSERVACIONES
1	193406	1	JUEGO DE JUNTAS	GASKET KIT	JEU DE JOINTS	2'5 C-2'5 L-2'5 ESP.
2	194495	1	JUEGO DE JUNTAS	GASKET KIT	JEU DE JOINTS	2500 C-2500 L

190018

ROVER (1) 2'5-2'5E
LT-85 (2) 2500 C-2500 L

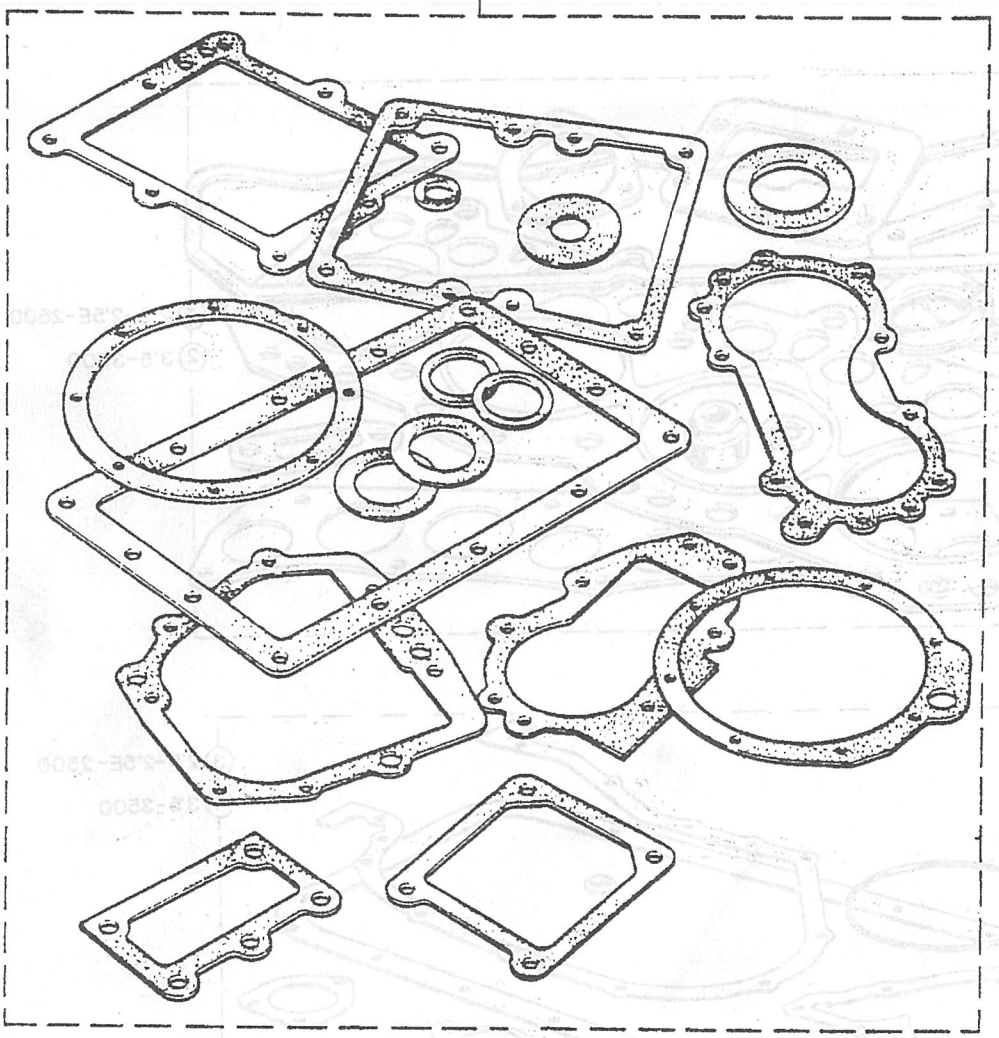

I N D I C E N U M E R I C O

****

NUM. DE PIEZA	PAGIN	NUM. DE PIEZA	PAGIN	NUM. DE PIEZA	PAGIN	NUM. DE PIEZA	PAGIN
00000A00146	48	054959	16	088190	196	113299	17
00000A00147	48	054959	38	088190	211	113299	19
00000A00148	48	054959	48	088190	212	113299	20
00000A00281	221	054959	121	088190	217	113307	50
00000A00314	42	054959	150	088190	218	113317	7
00000A00315	42	055266	28	09103A08152	153	113345	140
00000A00316	42	055266	29	09148A35001	111	113346	16
00000A00317	42	05843	54	09160-12055	100	113363	15
00000A00318	42	05852	58	09161-10009	112	113363	17
00000A00319	42	05853	58	09203	117	113363	20
00000A00320	42	05854	58	09241-08003	2	113366	32
00000A00321	42	06395	56	09308-14006	148	113376	10
00000A00323	42	06395	76	09320A06014	146	113383	4
00000A00324	42	06397	56	09404A06402	124	113415	32
00000A00325	42	06397	65	09404A06402	125	113474	14
00000A00326	42	06402	56	09404A06402	126	113476	5
00000A00327	42	06405	56	09404A06402	127	113525	15
00008-00000	18	06422	58	09404A06402	128	113531	7
00008-00000	149	06860	13	09404A06402	142	113580	2
00008-00000	149	06860	22	09404A06402	178	113580	14
00008-00000	214	06860	71	09404A06402	179	113581	5
02112-05126	153	06860	73	09404A06402	180	113581	10
02112-05126	168	06860	89	09409-07306	140	113610	8
02112-06163	146	06860	90	09409-07306	144	113610	11
02132-05205	154	06860	111	09409-07306	176	113616	16
02132-05205	156	06860	121	09409-07306	179	113629	32
02132A04155	224	06860	122	09409-07306	183	113631	55
021440	51	070838	154	09561	56	113635	2
021440	74	070838	157	09814A00001	227	118219	21
030454	38	070838	158	09814A00007	227	118243	33
03141-05165	176	070838	159	09960	56	118407	32
03141T04106	116	070838	181	09961	56	118446	1
03141T04106	153	070838	182	10211E1	48	118501	16
03211-04125	40	070838	198	108243	153	118523	10
03211-04125	214	07289	54	108248	167	118545	21
03649	58	07316	81	108252	167	118625	15
052257	16	07316	88	10882	109	118658	9
052257	37	075805	156	110414	81	118675	13
052257	39	075805	159	110414	89	118689	7
052257	59	08188	56	110414	89	118690	7
052257	150	08310-11056	76	110414	90	118715	3
054377	74	08310-11066	179	111147	146	118729	50
054760	29	08310-11083	21	111263	62	118731	50
054760	34	08321A31056	121	111263	73	118775	1
054760	38	08321A31056	122	112353	16	118785	21
054760	147	08321A31056	150	112449	12	118789	12
054760	148	08321A31056	151	112459	13	118799-X	4
054760	162	08321A31066	146	112527	9	118799-Y	4
054760	164	08321A31066	153	112528	9	118812	3
054760	167	08323-31066	168	112614	5	11H1781	22
054760	170	08331-31266	9	112871	32	120375	78
054760	170	08332T11156	111	112965	15	120692	96
054760	171	08566	3	112983	120	120859	59
054760	171	08566	78	112986	11	121204	81
054760	172	087212	129	113048	2	121205	89
054760	173	087252	110	113114	33	121212	62
054760	173	087912	38	113166	11	121212	79
054760	173	087914	134	113178	50	121299	89
054760	185	087914	135	113197	11	121317	54
054760	187	087914	137	113222	8	121324	57
054760	191	088016	134	113224	50	121332	65
054760	191	088016	135	113240	7	121332	65
054760	194	088016	137	113253	7	121332	66
054760	194	088190	48	113256	15	121335	80
054760	196	088190	49	113257	9	121336	80
054760	196	088190	154	113268	13	121337	80
054760	197	088190	156	113272	50	121340	76
054781	162	088190	193	113289	16	121342	59
054781	163	088190	193	113297	15	121344	69
054781	167	088190	195	113299	15	121345	75

I N D I C E N U M E R I C O

****

NUM. DE PIEZA	PAGIN	NUM. DE PIEZA	PAGIN	NUM. DE PIEZA	PAGIN	NUM. DE PIEZA	PAGIN
121396	68	130732	96	150958	191	163406	30
121396	119	130767	92	1510	114	163406	31
121398	67	130767	94	1510	115	163713	137
121410	61	130768	93	151023	191	163714	132
121439	59	130768	95	151126	197	163767	132
121455	150	130769	93	151127	197	163768	132
121455	206	130769	95	151179	165	163772	136
121490	74	130770	93	152214	197	163785	137
121499	63	130770	95	152215	193	163786	137
121500	69	130771	93	152215	197	163789	134
121501	65	130771	95	153227	194	163789	135
121501	65	130777	82	153699	185	163960	35
121501	65	130777	84	153699	187	164025	26
127399	90	130778	88	153976	186	164026	25
127480	79	130778	90	153976	187	164137	101
127483	71	130779	86	154324	186	164144	101
127484	74	137528	88	154328	211	164158	102
127519	73	137528	90	154329	211	164160	101
127520	62	137528	96	154330	211	164167	101
127539	62	137627	88	154331	211	164168	101
127551	79	137667	90	154647	58	164173	101
127591	54	137707	90	155085	217	1643	58
127607	51	137708	88	155085	218	164323	52
127624	60	137744	83	155086	217	1645	56
127639	59	137744	85	155086	218	164528	48
127649	122	137744	86	155088	152	164529	48
127662	121	137751	92	155089	152	164534	48
127665	59	137754	81	156446	59	164551	50
127666	59	137768	88	157355	165	164624	34
127667	53	137771	87	157507	207	164624	35
127668	53	137772	87	157532	207	164633	116
130524	92	137777	81	158387	166	164647	22
130524	94	137779	81	158614	194	164685	22
130526	92	137779	88	159721	178	164686	22
130526	94	137779	92	159721	179	164722	132
130528	92	137787	81	159721	180	164725	125
130528	94	137788	88	159721	181	164725	126
130530	92	137789	81	159721	182	164725	127
130530	94	137790	88	159804	187	164752	138
130532	92	137792	88	160069	38	164753	81
130532	94	137797	88	160979	227	164753	138
130534	92	137799	81	161092	25	164754	81
130534	94	137824	81	161510	5	164754	138
130536	92	137825	81	161587	48	164924	98
130536	94	13H7343	19	161852	38	165101	100
130538	92	13H7343	20	162111	100	165102	100
130538	94	141133	138	162111	100	165103	111
130540	92	141133	139	162111	109	165104	111
130540	94	141627	125	162111	139	165107	103
130560	87	141628	124	162575	38	165119	100
130561	87	141630	126	162576	38	165131	101
130562	87	141630	127	162754	134	165132	101
130563	87	141630	128	162754	135	165137	99
130564	87	147684	131	162783	132	165176	101
130566	89	147684	132	162787	136	165177	101
130567	89	147685	131	162788	136	165380	33
130673	92	147685	132	162790	137	165385	120
130673	94	148196	126	162792	132	165396	100
130701	82	148196	127	162795	136	165396	104
130701	84	148196	128	162952	227	165397	100
130702	82	148458	139	162961	227	165397	106
130702	84	148569	125	162966	227	165398	101
130715	88	148569	126	162979	227	165535	38
130716	89	148569	127	162980	227	165662	11
130717	87	150844	39	163059	30	165663	22
130718	86	150956	190	163117	101	165667	178
130720	87	150956	191	163123	100	165667	179
130721	87	150957	190	163149	107	165667	180
130723	86	150957	191	163406	12	165824	40
130724	86	150958	190	163406	25	165824	49

I N D I C E N U M E R I C O

****

NUM. DE PIEZA	PAGIN	NUM. DE PIEZA	PAGIN	NUM. DE PIEZA	PAGIN	NUM. DE PIEZA	PAGIN
165900	98	166797	48	174209	111	176706	48
165901	98	166798	48	174215	52	176724	48
165903	98	166844	48	174218	52	176728	36
165907	98	166844	48	174221	110	176729	36
165916	98	167424	187	174224	110	176730	36
165920	98	167795	134	174226	114	177203	112
165921	98	167796	131	174227	114	177209	118
165948	34	167799	133	174239	110	177209	119
165948	35	168170	100	174240	110	178227	117
165950	34	168170	109	174243	52	178227	118
165950	35	168452	28	174259	111	178227	119
165952	34	168700	131	174260	111	178702	38
165953	34	168723	131	174282	52	180103	57
165957	34	168724	134	174285	111	180105	55
165958	34	168724	135	174286	111	180105	75
165992	34	168744	131	174288	111	180107	57
165995	35	168745	133	174289	111	180107	71
165996	35	169105	100	174292	111	180107	74
166060	28	169105	109	174295	110	180107	118
166070	100	169106	100	174297	111	180107	119
166070	103	169106	109	174700	43	180108	38
166338	99	169107	100	174715	41	180108	55
166372	111	169107	100	175202	111	180108	71
166382	111	169107	109	175204	108	180108	78
166383	111	169107	139	175205	111	180108	78
166531	121	169117	107	175211	117	180108	117
166531	122	169134	100	175211	119	180108	118
166554	37	169158	109	175212	118	180108	119
166572	37	169172	100	175212	119	180111	71
166579	38	169180	109	175273	101	180122	74
166603	41	169185	100	175277	101	180124	16
166630	122	169189	45	175278	108	180124	22
166631	122	169700	135	175283	107	180124	22
166655	121	169701	135	175285	120	180124	25
166655	123	169728	134	175291	111	180124	30
166657	122	169730	134	175292	111	180124	48
166658	121	169795	132	175293	111	180124	59
166658	122	169796	132	175294	111	180124	146
166659	121	169799	132	175296	100	180124	150
166659	122	169800	138	175296	105	180124	185
166660	121	169937	98	175297	100	180124	187
166660	122	171237	117	175299	117	180124	193
166662	150	171251	52	175724	40	180124	196
166663	122	171264	52	175730	122	180124	197
166665	153	171265	52	175764	36	180124	207
166666	99	171273	110	175775	48	180124	208
166666	101	171279	52	176200	117	180124	211
166667	36	171279	110	176200	118	180124	212
166674	38	171280	110	176206	116	180124	212
166678	122	171281	110	176213	116	180124	217
166707	185	171282	52	176214	51	180124	218
166707	187	171282	110	176214	112	180138	118
166720	40	171288	52	176215	51	180138	119
166721	40	171288	110	176216	51	180139	71
166734	39	171764	46	176220	100	180181	72
166735	39	171764	47	176236	100	180183	83
166744	15	172236	117	176252	120	180183	85
166768	121	172281	116	176259	120	180183	86
166769	121	173200	113	176263	111	180183	88
166770	17	173209	113	176264	112	180183	90
166770	121	173210	113	176281	120	180187	59
166772	38	173213	113	176283	117	180208	54
166777	39	173214	113	176283	119	180209	48
166778	110	173291	117	176625	28	180307	74
166779	44	173297	111	176702	36	180309	57
166786	61	173765	38	176702	36	180309	78
166793	49	173766	38	176702-1	36	180309	83
166794	49	173799	42	176703	36	180309	85
166795	48	174206	52	176704	36	180309	88
166796	48	174208	113	176705	40	180309	93

I N D I C E N U M E R I C O

****

NUM. DE PIEZA	PAGIN	NUM. DE PIEZA	PAGIN	NUM. DE PIEZA	PAGIN	NUM. DE PIEZA	PAGIN
180309	95	181184	18	181184	217	182103	120
180426	28	181184	22	181184	218	182103	170
180426	54	181184	22	181184	218	182103	190
180426	57	181184	32	181184	221	182103	191
180426	71	181184	35	181184	222	182103	194
180426	83	181184	38	181185	16	182103	196
180426	85	181184	39	181185	29	182112	17
180426	86	181184	52	181185	34	182112	21
180426	88	181184	101	181185	35	182112	22
180426	90	181184	107	181185	52	182112	109
180426	116	181184	125	181185	74	182112	125
180426	118	181184	126	181185	107	182112	126
180426	119	181184	127	181185	117	182112	127
180426	124	181184	140	181185	117	182112	142
180426	125	181184	142	181185	125	182112	142
180426	126	181184	142	181185	126	182112	144
180426	127	181184	143	181185	127	182112	144
180426	128	181184	144	181185	129	182112	145
180426	129	181184	144	181185	140	182112	165
180426	130	181184	144	181185	140	182112	166
180426	138	181184	146	181185	140	182112	167
180426	140	181184	146	181185	155	182112	173
180426	165	181184	161	181185	157	182112	175
180426	166	181184	161	181185	161	182112	185
180426	220	181184	161	181185	165	182112	187
180426	229	181184	162	181185	165	182112	189
181153	116	181184	162	181185	165	182112	193
181156	72	181184	163	181185	166	182112	197
181158	82	181184	163	181185	167	182113	16
181158	84	181184	163	181185	170	182113	18
181158	87	181184	165	181185	170	182113	32
181159	82	181184	166	181185	170	182113	38
181165	82	181184	166	181185	171	182113	40
181165	84	181184	167	181185	171	182113	101
181165	87	181184	173	181185	171	182113	124
181165	88	181184	174	181185	172	182113	125
181165	90	181184	175	181185	173	182113	126
181165	138	181184	175	181185	173	182113	127
181166	55	181184	175	181185	173	182113	128
181167	78	181184	176	181185	174	182113	142
181168	74	181184	176	181185	181	182113	142
181169	52	181184	177	181185	182	182113	143
181169	110	181184	177	181185	185	182113	144
181170	81	181184	181	181185	187	182113	144
181170	81	181184	181	181185	190	182113	144
181170	88	181184	182	181185	190	182113	145
181170	89	181184	182	181185	190	182113	145
181170	89	181184	185	181185	191	182113	146
181170	90	181184	187	181185	191	182113	161
181170	91	181184	188	181185	191	182113	162
181170	116	181184	189	181185	194	182113	163
181170	124	181184	190	181185	194	182113	163
181170	125	181184	190	181185	194	182113	170
181170	126	181184	191	181185	195	182113	175
181170	127	181184	192	181185	196	182113	181
181170	128	181184	193	181185	196	182113	181
181173	22	181184	194	181185	197	182113	182
181173	44	181184	194	181185	197	182113	182
181173	45	181184	196	181185	207	182113	185
181173	52	181184	197	181185	223	182113	187
181173	74	181184	198	181190	55	182113	190
181173	107	181184	198	181192	216	182113	191
181173	108	181184	198	181192	217	182113	194
181181	35	181184	198	181337	97	182113	197
181181	120	181184	207	182101	22	182113	198
181181	120	181184	207	182101	29	182113	198
181182	109	181184	208	182101	108	182113	198
181184	16	181184	215	182101	161	182113	199
181184	16	181184	216	182103	34	182113	199
181184	17	181184	217	182103	35	182113	200

I N D I C E N U M E R I C O

********** HOJA 05

NUM. DE PIEZA	PAGIN	NUM. DE PIEZA	PAGIN	NUM. DE PIEZA	PAGIN	NUM. DE PIEZA	PAGIN
182113	200	183138	87	185237	101	189499	111
182113	200	183205	180	185240	100	189501	81
182113	201	183205	226	185251	61	189501	89
182113	201	183225	170	185254	18	189501	90
182113	202	183225	170	185254	38	189502	165
182113	202	183231	165	185254	121	189507	10
182113	208	183231	197	185254	122	189509	29
182113	221	183232	97	185254	140	189517	225
182113	222	183236	35	185254	149	189519	149
182116	170	183258	155	185254	150	189521	147
182116	190	183258	156	185254	150	189521	148
182116	191	183262	56	185254	151	191724	229
182116	193	183281	96	185254	168	191888	32
182116	196	183283	155	185254	168	191889	32
182117	16	183283	157	185258	190	191890	32
182117	125	183283	170	185258	190	191912	230
182117	126	183283	170	185258	191	191913	230
182117	127	183297	117	185258	191	191941	52
182117	140	184217	107	185258	194	191942	52
182117	174	184230	129	185258	194	192277	166
182117	216	184233	110	185258	196	193116	110
182117	217	184243	99	185258	196	193148	48
182118	9	184249	80	185258	197	193213	48
182118	18	184255	19	185265	61	193309	10
182118	52	184255	20	185267	155	193393	28
182118	108	184255	140	185267	157	193393	29
182118	110	184255	149	185267	170	193406	231
182118	129	184255	149	185267	170	193492	24
182118	165	184255	149	185267	171	193533	51
182118	166	184255	149	185267	171	193549	48
182118	171	184255	150	185268	171	193550	48
182118	173	184255	151	185269	171	193551	48
182118	223	184255	153	185270	168	193552	48
182120	52	184255	211	187135	117	193607	21
182120	107	184255	212	187135	119	193673	219
182120	116	184255	214	187172	51	193673	220
182120	140	184255	226	187175	71	193673	229
182120	146	184259	99	187405	211	193715	24
182120	162	184259	100	187405	212	193735	81
182120	163	184260	140	188149	83	193735	89
182120	165	184279	83	188149	85	193735	89
182120	167	184279	85	188149	86	193735	90
182120	170	184279	86	188183	51	193736	81
182120	171	184280	49	188401	16	193736	89
182120	173	184280	129	188401	30	193736	89
182120	181	184280	193	188401	31	193736	90
182120	182	184280	195	188408	120	193743	89
182120	185	184285	3	188471	15	193772	217
182120	187	184288	109	188471	16	193772	218
182120	207	184290	129	189130	55	193775	23
182120	217	184294	113	189130	59	193783	110
182120	218	184298	24	189410	67	193793	99
182124	22	184298	110	189442	9	193818	102
182124	107	185100	120	189463	133	193824	102
182124	108	185145	190	189463	134	193826	102
182124	140	185145	191	189463	135	193830	100
182125	44	185145	194	189464	131	193831	100
182125	45	185145	196	189468	97	193832	100
182125	74	185199	165	189469	121	193834	102
182135	44	185200	21	189469	122	193909	134
182135	45	185201	61	189474	99	193909	135
182135	190	185201	101	189475	178	193910	134
182135	191	185202	101	189475	179	193910	135
182135	194	185204	48	189475	180	193940	217
182135	196	185204	213	189475	181	193941	217
182135	197	185205	100	189475	182	193945	217
182184	99	185206	100	189484	16	193946	217
183138	59	185211	5	189484	30	193961	32
183138	82	185217	165	189484	76	194085	16
183138	84	185233	61	189484	146	194086	120

I N D I C E N U M E R I C O

****

NUM. DE PIEZA	PAGIN	NUM. DE PIEZA	PAGIN	NUM. DE PIEZA	PAGIN	NUM. DE PIEZA	PAGIN
194309	38	200749	206	201940	162	204237	167
194312	121	200813	197	201940	163	204238	156
194312	122	200902	203	201940	167	204238	167
194344	229	200905	203	201945	154	204239	157
194345	229	200938	170	201946	154	204239	167
194346	120	201013	205	201947	156	204247	157
194393	132	201232	154	201948	156	204248	157
194394	132	201233	154	202044	185	204249	154
194395	132	201233	158	202044	187	204277	154
194398	136	201234	154	202045	185	204277	213
194398	137	201234	158	202045	187	204278	154
194399	136	201235	154	202371	140	204278	213
194399	137	201235	156	202945	142	204279	157
194400	136	201235	158	202994	165	204279	213
194400	137	201235	159	202995	165	204280	157
194403	65	201237	154	203067	206	204280	213
194404	65	201237	158	203164	146	204313	142
194405	66	201265	200	203193	203	204313	144
194413	113	201266	193	203194	203	204314	157
194460	136	201266	195	203375	141	204575	193
194461	15	201267	193	203379	141	204576	193
194495	231	201267	195	203380	141	204750	163
194532	100	201283	193	203381	141	204750	203
194534	136	201283	195	203384	217	204800	162
194534	137	201390	156	203385	217	204800	164
194547	17	201396	156	203416	177	204800	167
194577	217	201643	155	203421	154	204846	142
194577	218	201643	156	203430	217	204846	144
194634	17	201643	158	203430	218	205026	157
194636	132	201643	159	203569	17	205078	186
194636	136	201647	154	203578	176	205078	188
194636	137	201647	158	203580	146	205078	189
194647	17	201664	166	203618	154	205206	218
194713	47	201758	190	203618	156	205405	153
194714	47	201758	193	203622	161	205431	215
194715	47	201758	195	203731	213	205432	215
194716	47	201759	190	203743	142	205433	215
194717	47	201759	191	203743	144	205451	223
194718	47	201759	193	203744	142	205466	218
194722	47	201759	195	203744	144	205715	205
194723	47	201760	191	203751	155	205773	177
194724	47	201761	190	203751	156	205788	182
194725	47	201761	191	203811	31	205789	182
194726	47	201761	193	203811	155	205812	163
194727	47	201763	199	203811	156	205820	165
194728	47	201763	200	203811	175	205850	165
194743	228	201764	200	203815	175	205858	173
194744	228	201768	200	203815	176	205859	173
194767	47	201776	141	203852	176	205861	140
194810	89	201799	52	203852	177	205867	140
194813	89	201800	52	204147	154	205889	179
194814	89	201805	16	204147	156	205903	212
194815	89	201806	16	204159	154	205911	108
194816	89	201835	198	204160	154	205912	108
194817	89	201836	198	204160	156	205913	163
194820	113	201837	198	204160	169	205914	107
194821	113	201841	175	204162	156	205916	211
194851	114	201841	185	204163	156	205916	212
194852	114	201841	187	204163	159	205917	211
194853	114	201841	189	204165	156	205917	212
194854	114	201843	175	204166	154	205928	161
194855	114	201843	185	204167	156	205928	203
194860	110	201843	187	204168	154	205928	203
194985	48	201843	189	204178	156	205929	212
194986	48	201875	203	204179	154	205931	212
194988	110	201876	203	204223	156	205933	212
194989	110	201924	216	204224	156	205934	212
194990	110	201925	216	204236	154	205941	195
194992	110	201935	220	204236	167	205947	212
194993	110	201936	220	204237	154	205948	212

I N D I C E N U M E R I C O

****

NUM. DE PIEZA	PAGIN	NUM. DE PIEZA	PAGIN	NUM. DE PIEZA	PAGIN	NUM. DE PIEZA	PAGIN
205960	147	207833	190	217268	84	219098	86
205960	148	207834	191	217268	86	219098	88
205972	162	207835	191	217269K1	83	219098	90
205972	163	207854	170	217269K1	85	219521	75
205973	162	207913	211	217269K1	86	219680	48
205973	163	207914	211	217269K1	88	219680	142
205986	199	208040	216	217269K1	90	219680	144
205986	200	208040	217	217270	83	219704E1	227
205986	201	208041	216	217270	85	219709	74
205986	202	208041	217	217270	86	219721	59
205988	179	208043	216	217270	88	219722	59
206073	16	208043	217	217270	90	219723	59
206291	180	208046	216	217325	78	219797	59
206292	179	208049	216	217352	83	2205	165
206292	180	208137	161	217352	85	2210	116
206292	181	208289	181	217352	86	2210	116
206292	182	208290	181	217352	88	2210	129
206293	181	208301	198	217352	90	2215	190
206336	129	208302	198	217353	83	2215	191
206337	129	208386	218	217353	85	2215	193
206344	129	208434	162	217353	86	2215	196
206367	181	208434	163	217353	88	2218	116
206413	175	208434	167	217353	90	2223	52
206421	129	208531	193	217355K1	83	2223	110
206422	129	208532	193	217355K1	85	2247	48
206522	156	208545	211	217355K1	86	2247	112
206523	156	208545	212	217355K1	88	2249	129
206545	154	208546	211	217355K1	90	2251	124
206546	154	208546	212	217398	82	2251	125
206567	156	208547	211	217398	84	2251	126
206568	156	208548	211	217400	82	2251	127
206575	154	208723	216	217400	84	2251	128
206576	154	208724	216	217445	74	2251	130
206577	156	209037	140	217476	56	2251	220
206578	156	209038	140	217477	56	2251	229
206843	154	209127	17	217478	71	2258	34
206843	156	209129	217	217484	57	2266	44
206843	170	209140	220	217488	57	2266	45
206843	170	209141	220	217489	57	2266	76
206844	154	209233	146	217490	57	2266	107
206844	156	209384	217	217507F1	93	2266	107
206844	170	209600	181	217507F1	95	2266	173
206844	170	209600	182	217512	57	230086	74
206889	155	209602	180	217526	57	230090	74
206889	224	209602	184	217546	57	230140	71
206890	155	209793	141	217564	57	230277	74
206890	224	209795	217	217564	58	230278	74
206917	154	209845	175	217564	68	230313	6
206918	154	209845-R	175	217564	74	230511	82
206938	1	209855	181	217568	57	230511	84
206981	154	209855	182	217568	67	230511	86
206981	156	209869	185	217584	74	230759	109
206988	154	211502	57	217694	109	230760	109
206989	154	213340	109	217778	71	231116	59
206990	156	213636	58	217970	71	231341	54
206991	156	213959E1	16	217976	71	231505	83
207072	229	214795	56	217977	71	231505	85
207337	219	214797	67	217977	73	231505	86
207337	220	214797	80	217978	71	231505	88
207337	229	215758	58	217978	78	231505	90
207338	229	215758	71	217983	116	231601E1	98
207397	219	215758	71	217985	116	231759	50
207398	219	215769	58	218243	57	232044	9
207523	173	215769	78	218244K1	56	232413	82
207524	173	216909	51	218259F2	71	232413	84
207703	191	216914	51	218408	116	232413	87
207704	191	216914	51	218409	116	232464	74
207760	190	216962	67	218410	116	232497	71
207761	190	216962	80	219098	83	232565	57
207832	190	217268	82	219098	85	232608	59

I N D I C E N U M E R I C O

NUM. DE PIEZA	PAGIN	NUM. DE PIEZA	PAGIN	NUM. DE PIEZA	PAGIN	NUM. DE PIEZA	PAGIN
232846	71	239422E2	84	245926	35	254877	99
233220	51	239422E2	86	247040	7	2550	13
233241	78	239422E2	88	247051	5	2550	33
233406	74	239422E2	90	247127	2	2550	161
233407	74	2396	110	247212	13	255008	140
233409	74	239600	13	247554	13	255045	129
233416	74	239600	22	247555	13	255045	140
233437	74	239600	121	247583	4	255045	220
233438	74	239600	123	247584K1	12	255045	229
233441	74	239706	56	247606	12	255046	116
233448	78	239710	34	247664	9	255047	124
233449	74	239710	35	247665	9	255047	125
233566	37	239711	35	247683	5	255047	126
233573	131	239715	34	247723	5	255047	127
233573	132	239715	35	247726E1	21	255047	128
233573	133	240407	71	247741	9	255047	130
233573	133	240407	73	247874	15	255047	138
233573	134	240430	19	247965	2	255070	107
233573	134	240430	20	248720	55	255208	37
233573	135	240430	25	250009	99	255209	34
233573	135	240430	69	250009	101	255209	35
233573	136	240430	89	250431	32	255209	52
233573	136	240430	90	250431	141	255209	107
233573	137	240431	17	250830	5	255209	145
233573	137	240708	73	250959	111	255209	165
233879	115	240708	117	250959	185	255209	174
234525	78	241380	124	250959	187	255209	175
234619E1	227	241380	125	250959	197	255209	176
234658	75	241380	126	252163	109	255209	177
234658	176	241380	127	252163K1	107	255209	187
235416	74	241380	128	252164	138	255209	190
235770	3	241598	58	252165	131	255209	191
235968	82	241999	92	252165	132	255209	194
235968	84	241999	94	252165	133	255209	195
235968	87	242520E1	82	252165	134	255209	198
236070	82	242520E1	84	252165	135	255209	198
236070	84	242521E1	82	252165	136	255209	198
236070	86	242521E1	84	252165	137	255209	199
236072	93	242522E1	81	252220	34	255209	199
236072	95	242522E1	82	252220	35	255209	200
236074	57	242522E1	84	252220	37	255209	200
236074	78	242522E1	89	252220	76	255209	201
236075	78	242522E1	89	252220	77	255209	201
236257	9	242522E1	90	252220	124	255209	202
236305	56	243057E2	131	252220	125	255209	202
236305	96	243057E2	132	252220	126	255209	217
236541	78	243057E2	133	252220	127	255209	218
236544K1	57	243057E2	134	252220	128	255211	16
236548	78	243057E2	135	252220	138	255214	17
236993	114	243057E2	136	252220	139	255214	22
236995	114	243057E2	137	252220	165	255214	172
237120	16	243057E2	138	253888	161	255466	223
237120	22	243057E2	139	254800	21	256001	191
237120	78	243123E2	133	254800	118	256002	15
237120	146	243124E2	133	254800	119	256043	116
237120	154	243611	78	254800	146	256051	124
237120	157	243714	74	254812	28	256051	125
237121	16	243873	78	254812	29	256051	126
237121	25	243958	27	254812	116	256051	127
237121	207	244009	34	254812	124	256051	128
237121	212	244009	35	254812	125	256207	138
237121	217	244150	82	254812	126	256207	139
237121	218	244150	84	254812	127	256208	161
237251	71	244151	82	254812	128	256241	28
237982	57	244151	84	254812	130	256241	166
238180	117	244162	133	254812	138	256254	125
238329	74	244162	136	254813	117	256254	126
238542	114	244487	9	254814	147	256254	127
2388	169	244488	9	254814	148	256254	129
239422E2	82	245926	34	254824	5	256465	109

I N D I C E N U M E R I C O

****

NUM. DE PIEZA	PAGIN	NUM. DE PIEZA	PAGIN	NUM. DE PIEZA	PAGIN	NUM. DE PIEZA	PAGIN
257020	150	272967	133	302532	177	3074	162
257020	151	272968	133	302532	181	3074	163
257023	154	273069	2	302532	182	3074	163
257023	157	273069	7	302532	189	3074	163
261850	99	273069	12	302825	161	3074	165
261858	99	273069	21	302828	161	3074	166
261865	99	273521	21	302934	165	3074	166
261869	99	274233	6	303847	165	3074	166
261873	99	274423K1	118	304301	207	3074	167
261874	99	274423K1	119	304401K1	187	3074	170
264024	131	275565	23	304401K1	189	3074	172
264024	132	275679	5	305232	162	3074	173
264024	133	275744	115	305232	163	3074	174
264024	134	276034	131	306340	207	3074	175
264024	135	276034	131	306564	163	3074	175
264024	136	276054	147	306564	171	3074	175
264024	137	276719	82	3073	16	3074	176
264024	138	276719	84	3073	22	3074	176
264024	139	276720	82	3073	25	3074	177
264466K2	137	276720	84	3073	30	3074	177
264466K2	139	277289	82	3073	76	3074	179
264467K2	137	277289	84	3073	112	3074	181
264467K2	139	277289	86	3073	129	3074	181
264563	131	277311F1	82	3073	146	3074	181
264591E1	48	277311F1	84	3073	152	3074	182
264591E1	48	277311F1	86	3073	185	3074	182
264591E1	48	278020	117	3073	187	3074	183
264591E1	48	278345F1	227	3073	197	3074	185
264636	56	279653F1	31	3073	207	3074	185
265459	131	279653F1	32	3073	207	3074	187
265460	131	279678	134	3073	212	3074	188
265627	131	279679	134	3074	15	3074	189
266945	4	279970	134	3074	17	3074	190
266956	78	279970	135	3074	18	3074	190
266992	74	279970	137	3074	21	3074	191
266992	150	2851	28	3074	22	3074	192
266992	151	2851	29	3074	32	3074	193
267412	71	2851	124	3074	35	3074	194
267412	117	2851	125	3074	38	3074	194
267601	51	2851	126	3074	55	3074	196
267782	57	2851	127	3074	55	3074	197
267795F1	72	2851	128	3074	58	3074	198
267828	57	2876	32	3074	59	3074	198
268791	57	2876	74	3074	71	3074	198
268846	74	2920	2	3074	71	3074	198
268849	78	2920	14	3074	78	3074	198
269265	82	2920	21	3074	82	3074	198
269265	84	300784	187	3074	84	3074	199
269266	82	300789	179	3074	87	3074	199
269266	84	300789	185	3074	101	3074	199
269413	55	300789	189	3074	107	3074	200
269783	52	300924	207	3074	108	3074	200
2703E1	227	301328	161	3074	109	3074	200
270520	131	301328	207	3074	125	3074	200
270520	132	301328	207	3074	126	3074	201
270656	228	301346	154	3074	127	3074	201
271013	99	301346	156	3074	129	3074	201
271372	99	301346	217	3074	140	3074	202
271379	99	301346	218	3074	142	3074	202
271379	99	302178	199	3074	142	3074	202
271384	99	302178	200	3074	142	3074	207
272185	71	302186	179	3074	144	3074	208
272309F2	98	302222	142	3074	144	3074	208
272474	21	302222	145	3074	144	3074	215
272498	130	302373	52	3074	146	3074	216
272501	130	302532	142	3074	146	3074	217
272512	21	302532	144	3074	161	3074	217
272596	58	302532	176	3074	161	3074	218
272597	58	302532	176	3074	161	3074	218
272713	52	302532	177	3074	162	3074	221

I N D I C E N U M E R I C O

NUM. DE PIEZA	PAGIN	NUM. DE PIEZA	PAGIN	NUM. DE PIEZA	PAGIN	NUM. DE PIEZA	PAGIN
3074	222	330799	197	333202	189	346786	123
3075	109	330830	191	333243K1	181	346849	146
3075	129	330830	208	333244K1	181	346878	163
3077	117	330896	207	333257	174	346894	18
3077	139	330897	207	333259	173	346976	18
308070	199	330908	208	333260	173	347018	173
308070	200	331106	208	333263	181	347019	173
312856	81	331281	207	333263	183	347035K2	184
312856	89	331308	207	333401	191	347036K2	184
312856	90	331372	207	333486	197	347362	171
312886	162	331480	215	333487	195	347362	171
312886	163	331481E1	215	333693K1	175	347363	171
313858	30	331673	207	333710	171	347363	171
320045	142	331674	207	333714	181	347369	171
320045	144	331675	207	333714	183	347369	171
320045	176	331676	207	334121	152	347586	19
320045	176	332052F1	190	334245	208	347698K1	151
320045	177	332052F1	191	334246	208	347939	19
320045	177	332052F1	194	334966	175	348394	193
320045	181	332052F1	196	336412	161	348394	197
320045	182	332081	190	336454	193	348395	197
320045	189	332081	191	336535	146	348396	193
3238	54	332081	194	336536	146	348430	207
3290	50	332081	196	336567	185	348747	108
3290	61	332112K1	193	336738	147	348859	175
3292	54	332112K1	195	336738	148	35003-00000	122
3292	61	332113K1	193	336764	193	35157-00000	122
3292	69	332113K1	195	337710	173	35160-00000	122
3292	71	332146	161	337711	173	3621	144
3292	82	332147	162	337771	173	36410A80011	48
3292	84	332147	163	337772	173	36430A80011	48
3292	86	332215	193	337806	166	3650	71
3299	117	332215	195	337938	173	3680	107
3300	83	332216	193	337939	173	3680	117
3300	85	332217	193	337969K1	146	369077	17
3300	88	332217E2	193	338023	147	369077	18
330052	170	332230	193	338023	148	369077	150
330146	167	332239	193	338024	147	369077	151
330233	161	332298	193	338027	110	369077	168
330234	161	332306K3	193	338360	197	369077	214
330243E2	180	332307K3	193	338554K1	190	3707	165
330243E2	184	332435	197	338554K1	191	37280A80000	122
330267	178	332445	161	338554K1	193	37400A84420	121
330301	178	332446	161	338554K1	196	37400A84420	122
330303	173	332451	181	338617	161	37400B84420	121
330304	173	332451	182	338618	161	37400B84420	122
330348	175	332459	207	338627	161	37400D84420	122
330367	185	332465	207	338752	185	37400F84420	122
330387	174	332521	185	338780	175	37610B80042	76
330399	161	332521	187	345100	175	37940A79000	116
330419	229	332521	189	345101	175	3816	16
330422	161	332582	178	345149	181	3816	22
330426	142	332582	179	345149	182	3816	38
330427	142	332582	180	345498	166	3816	76
330553	207	332647	147	345699	207	3816	150
330557	207	332647	148	345845K1	152	3816	150
330578	207	332647	156	345846K1	152	3816	151
330579	207	332942	162	345915	161	3816	152
330615	187	332942	163	346319	170	3816	152
330661	193	332943F1	162	346319	171	3816	152
330699	207	332943F1	163	346576	152	3816	154
330750	198	332950	207	3467	82	3816	157
330766	197	332952	207	3467	84	3816	159
330767	198	333140F2	166	3467	87	3816	168
330769K1	197	333159	178	3467	142	3816	175
330790	197	333159	179	3467	144	3816	185
330791	197	333159	180	346715	108	3816	186
330792	197	333159	181	346722	108	3816	187
330793	197	333159	182	346724K3	151	3816	187
330798	197	333201	189	346786	121	3816	197

I N D I C E N U M E R I C O

NUM. DE PIEZA	PAGIN	NUM. DE PIEZA	PAGIN	NUM. DE PIEZA	PAGIN	NUM. DE PIEZA	PAGIN
3817	140	3840	179	3900	176	40029-00000	100
3817	142	3840	181	3900	176	4034	16
3817	143	3840	182	3900	176	4034	193
3817	144	3840	185	3900	177	4034	196
3817	145	3840	187	3900	177	4034	211
3817	146	3840	187	3900	177	4034	212
3817	177	3840	189	3900	181	4042	22
3817	177	3840	197	3900	181	4042	161
3817	177	3840	197	3900	181	4063	131
3819	82	3840	199	3900	182	4063	132
3821	22	3840	200	3900	182	4063	133
3821	142	3840	200	3900	183	4063	134
3821	145	3840	201	3900	185	4063	135
3821	161	3840	202	3900	187	4063	136
3821	174	3840	216	3900	189	4063	137
3821	175	3840	217	3900	190	4063	138
3821	176	3840	218	3900	190	4063	139
3821	176	3840	221	3900	191	4067	191
3822	16	3840	222	3900	191	4071	17
3829	146	38400E80000	221	3900	192	4071	111
3829	197	3841	16	3900	194	4071	163
3830	16	3841	44	3900	194	4071	172
3830	18	3841	45	3900	195	4071	193
3830	22	3841	173	3900	198	4094	140
3830	24	3841	174	3900	198	4094	166
3830	29	3843	223	3900	198	4115	99
3830	52	3852	193	3900	199	41379	111
3830	107	3852	195	3900	199	41379	146
3830	108	3852	225	3900	200	4148	52
3830	108	38610D78303	38	3900	200	4171	100
3830	140	38610G78303	38	3900	201	4171	147
3830	162	3890	28	3900	201	4171	148
3830	164	3890	29	3900	202	42H1112	76
3830	165	3895	161	3900	202	4374	140
3830	165	3896	161	3900	207	4374	146
3830	165	3898	140	3900	215	4432	116
3830	166	3898	173	3900	217	4432	117
3830	170	3898	190	3900	218	4432	118
3830	170	3898	190	3901	163	4432	119
3830	171	3898	191	3901	171	453-V-220	184
3830	171	3898	191	3904	116	453-V-221	184
3830	172	3898	194	3912	108	453-V-222	184
3830	173	3898	194	3912	138	453-V-223	184
3830	181	3898	196	3912	139	453-V-224	184
3830	182	3898	196	3912	146	453-V-234	184
3830	185	3898	197	3912	146	453-V-235	184
3830	187	3898	197	3912	172	453-V-245	191
3830	190	3899	34	3946	32	453-V-246	191
3830	191	3899	35	3946	34	453-V-251	184
3830	194	3899	45	3946	35	453-V-252	184
3830	196	3899	140	3946	71	4574	116
3830	217	3899	163	395508K1	151	4574	119
3830	218	3899	171	395829	18	500436	25
3840	17	3899	181	395829	150	500436	30
3840	18	3899	182	395830	18	500437	25
3840	37	3899	207	395830	150	500446	28
3840	107	3899	216	396139	152	500446	29
3840	129	3899	217	396540K1	213	500746	134
3840	141	3899	223	396541	210	500746	135
3840	143	3899	223	396541	215	500746	137
3840	144	3900	16	396542	215	500746	138
3840	144	3900	38	3966	142	500978	88
3840	161	3900	40	3966	144	500978	90
3840	165	3900	111	3968	55	501070K1	28
3840	166	3900	142	3972	28	501070K1	29
3840	167	3900	144	3982	165	501390E2	134
3840	168	3900	162	3987	121	501391E2	134
3840	170	3900	163	3987	122	501501	56
3840	173	3900	175	40027-00000	100	501593	2
3840	175	3900	176	40028-00000	100	502203	59

I N D I C E N U M E R I C O

NUM. DE PIEZA	PAGIN	NUM. DE PIEZA	PAGIN	NUM. DE PIEZA	PAGIN	NUM. DE PIEZA	PAGIN
502205	59	515468	118	531889	115	544337	109
502209	9	515468	119	531892	115	544772	138
50235	116	515470	118	531893	115	544772	139
502406	82	515470	119	532044	115	546799	7
502406	84	515848	99	532323	57	549168	74
502406	87	515849	99	532323	67	549169	74
502473	7	515925	118	532387	14	549229	89
502482	56	515925	119	532979	57	549230	92
50302E1	16	515926	118	533080	57	549230	94
503805	56	515927	118	533765	68	549232	92
503805	65	515927	119	533765	122	549232	94
503805	65	517588	133	534244	228	549234	92
503805	66	517589	133	535286	109	549234	94
504006	2	517711	24	535636	3	549236	92
504007	2	518466	5	535637	3	549236	94
504104	51	51950A83120	111	535638	3	549238	92
504233	29	51951B83400	111	535639	3	549238	94
504233	31	519864E1	10	535640	3	549240	92
505197E1	48	521328	57	536577	2	549240	94
505675	114	521522	99	536577	14	549242	92
505676	114	521582	6	537685	134	549242	94
505805	24	522318	71	537685	135	549244	92
507026	7	52246	54	537685	137	549244	94
507829	7	522745	9	537686	133	549246	92
508175	82	522858	15	537686	136	549246	94
508545	28	522937	24	537687E1	131	549248	92
508545	29	522938	24	537687E1	132	549248	94
508895	134	522939	24	537740	133	549250	92
508895	135	522940	24	537740	134	549250	94
508895	137	524515	118	537740	135	549252	92
508895	138	524515	119	537740	136	549252	94
508896E2	34	52459	56	537740	137	549254	93
508896E2	134	52459	65	537741	134	549254	95
508896E2	135	52459	65	537741	135	549256	93
508896E2	137	52459	66	537741	137	549256	95
509045	81	524765	5	537742	131	549258	93
509045	89	525389	7	537742	132	549258	95
509045	89	525497	5	537743	131	549260	93
509045	91	527109	15	537743	132	549260	95
509412	111	527110	15	537743	133	549262	93
509751	81	527169	4	537743	136	549262	95
509751	89	527235	15	537877	109	549264	93
509751	89	527351E1	2	537964	133	549264	95
509751	91	527351E1	4	537966	133	549266	93
509751	125	528235	71	538039	11	549266	95
509751	126	528683	55	538536	74	549268	93
509751	127	528685	55	539706	92	549268	95
509751	129	528690	55	539706	94	549270	93
510574	115	528701	55	539707	92	549270	95
511680	9	528720	56	539707	94	549272	93
512235	51	528865	54	539742	83	549272	95
512237	55	529823	14	539742	85	549274	93
512237	63	530178	9	539742K1	86	549274	95
512701	57	531001	83	539745	93	549276	93
512701	81	531001	85	539745	95	549276	95
513454	93	531001	86	540004	57	549278	93
513454	95	531040	109	540354	59	549278	95
513639	9	531043	82	540842	74	549280	93
515090	15	531043	84	541229	21	549280	95
515365	118	531043	86	541572	121	549282	93
515365	119	531104	71	541858	81	549282	95
515366	118	531324E1	22	541858	89	549284	93
515405	114	531433	82	541858	91	549284	95
515406	114	531433	84	543275	116	549299	81
515465	118	531433	86	543291	116	549299	90
515465	119	531494	82	543292	116	549473	86
515466	118	531494	84	543293	116	549473	88
515466	119	531494	86	543764	31	549473	90
515467	118	531672E1	37	543765	31	549495	89
515467	119	531888	115	543972	109	549495F1	89

I N D I C E N U M E R I C O

****

NUM. DE PIEZA	PAGIN	NUM. DE PIEZA	PAGIN	NUM. DE PIEZA	PAGIN	NUM. DE PIEZA	PAGIN
549496	89	56666	101	576713	54	595473F1	90
549496F1	89	56666	112	576714	55	595478	69
549909	9	56667	16	576717	55	595478	79
552418	138	56667	48	576718	55	595478	81
552418	139	566902K1	19	576720	55	595478	89
552435E2	26	566902K1	146	576724	55	595478	90
552457F1	124	568301	15	576729	58	59663	117
552457F1	125	568550	7	576734	56	597586	2
552578K1	116	568789	44	576735	56	598354	10
552583K1	116	568789	45	576751	51	599575	69
552804	99	569126	52	576767F1	90	599575	79
552805	116	569156	17	576768F1	90	599869	57
552818	138	569522	107	576825	83	599945	92
552856	116	569746	131	576825	85	599945	94
552857	116	569746	132	576825	86	600208	114
553000	81	571042	70	576825	88	600208	115
553001	89	571043	70	576825	90	600655	81
553002	89	571059	55	576837	57	600655	89
553084	56	571059	86	576844	88	600655	89
553263	83	571134	61	576844	90	600655	90
553263	85	571134	64	576907	56	600656	81
553263	86	571134	73	576973	115	600656	89
553263	88	571145	58	577137	117	600656	90
553263	90	571146	70	577271	107	605238	228
554725	5	571146	77	577272	107	605508	99
554726	5	571146	79	577434	131	606146	228
555704K3	10	571158	70	577434	132	607966	99
555711	147	571235E1	83	577442	139	607967	99
555711	148	571235F1	85	577473	98	607986	99
555711	221	571235F1	88	577473	165	607993	99
555844K3	28	571435	56	579202	38	614-V-004	166
555844K3	29	571468	68	58702	116	622042	57
55636	54	571468	80	587405	13	622045	55
55636	71	571536	68	587405	34	622047	71
556379	55	571536	73	587405	35	622155	74
55638	58	571665	68	587405	101	622180	51
556508	51	571711	86	587405	120	622281	59
556508	115	571711	88	589452	124	622324	69
556570	54	571711	90	589452	125	622388	70
55697	58	571970	67	589452	126	624433	109
55714	56	572313	16	589452	127	624434	109
55715	56	575047	39	589452	128	624436	109
55778	54	575395K1	121	591039	114	634604	169
559563	116	575474F1	37	591364	56	6395	11
559705	35	576159	92	591429	57	672-V-001	166
56102	58	576159	94	591519	56	672-V-002	166
56102	74	576236	92	591519	66	672-V-002	166
561195	81	576236	94	591606	82	672-V-003	166
561195	88	576237	92	591606	84	672-V-004	166
561196	81	576237	94	591988	51	672-V-009	166
561196	88	576238	92	592443	120	672-V-009	166
561221	75	576238	94	592510	51	672-V-013	166
561368	118	576239	92	592778	34	672-V-016	166
561856	118	576239	94	592778	35	672-V-017	166
562705	116	576510	82	592984K1	107	672-V-018	166
562706K1	116	576510	82	592985K1	107	672-V-029	166
562823	34	576510	84	593692	92	672-V-032	166
562823	35	576510	84	593692	94	672-V-040	166
562875	109	576510	86	593693	92	672-V-046	166
563146	23	576510	87	593693	94	711420	67
563190F1	24	576521	88	593802	70	711644	120
563195	21	576521	90	594104	82	712073	48
56398E1	28	576522	82	594104	84	712111	96
56398E1	29	576522	87	594104	87	712173	96
564308	33	576522	138	594195	57	712175	96
564332	21	576557	50	594290	67	712177	96
564456	9	576583	83	595123	99	712179	96
564713E1	16	576583	85	595396	81	712181	96
564999	16	576583K1	86	595396F1	81	712183	96
56666	22	576703	58	595473F1	89	712185	96

I N D I C E N U M E R I C O

NUM. DE PIEZA	PAGIN	NUM. DE PIEZA	PAGIN	NUM. DE PIEZA	PAGIN	NUM. DE PIEZA	PAGIN
712187	96	730088	183	730332	226	737014	198
712189	96	730089	179	730346	176	737016	198
712191	96	730089	183	730347	176	737017	198
712193	96	730097	210	73037	211	737029	178
712229	97	730098	210	73037	214	737030	178
712230	97	730099	210	730451	198	737036	180
712234	96	730100	210	730473	179	737037	180
712236	96	730101	210	730473	182	737038	180
712237	96	730102	210	730473	185	737039	180
712238	96	730103	210	730473	187	737040	180
712240	96	730104	210	730473	189	737077	16
712298	96	730105	210	730474	179	737116	173
712300	96	730106	210	730474	182	737117	173
712303	96	730107	210	730474	185	737125	142
712316	88	730108	210	730474	187	737125	144
712316	90	730109	210	730474	189	737126	142
712678	100	730110	210	730486	185	737126	144
712678	100	730111	210	730486	187	737128	142
712678	109	730112	210	730486	189	737134	142
712679	88	730113	210	730487	185	737346	173
712679	90	730114	210	730487	187	737347	173
712680	88	730115	210	730487	189	737360	170
712680	90	730116	210	730502	176	737360	170
712945	96	730117	210	730505	176	737361	170
712947	96	730118	210	730519	220	737361	171
712949	96	730119	210	730520	220	737362	170
712951	96	730120	210	730521	218	737362	171
712953	96	730121	210	730555	17	737506	170
712955	96	730135	197	730556	17	737555	144
712957	96	730135	203	730557	17	737556	144
712959	96	730191	205	730561	20	737558	144
712961	96	730192	205	730562	211	737560	144
712963	96	730204	209	730563	211	737561	144
712965	96	730204	209	730570	206	737562	144
712967	96	730205	209	730571	206	737570	179
712969	96	730205	209	730574	162	737571	179
712971	96	730205	209	730580	215	737572	179
712973	96	730206	209	730581	215	737573	179
713104	97	730206	209	730608	205	737574	179
713593	111	730207	209	730610	205	737586	182
71494-80001	34	730207	209	730627	198	737587	182
717930	25	730207	209	730672	19	737588	182
717930	26	730207	209	730673	19	737589	182
717934	25	730208	209	730683	195	737592	182
717934	26	730208	209	730709	176	737598	165
718079	96	730208	209	730711	17	737600	179
718331	96	730214	212	730722	162	737605	179
718602	96	730215	212	730722	163	737618	173
72001E1	223	730250	204	730734	211	737619	173
72626	25	730251	204	730734	214	737623	179
72626	26	730252	204	730739	176	737624	179
72626	28	730253	204	730757	206	737625	173
72626	111	730254	204	730788	179	737626	173
730005	144	730255	204	730788	185	737653	223
730006	224	730256	204	730789	179	737659	178
730007	224	730257	204	730789	185	737660	178
730017	197	730258	204	730790	140	737665	223
730017	199	730259	204	730799	125	737687	211
730017	200	730266	212	730799	126	737687	212
730017	201	730267	177	730799	127	737689	212
730017	202	730278	174	730801	179	737690	212
730018	197	730279	205	730803	121	737704	179
730018	199	730280	205	730803	123	737704	182
730018	200	730296	177	730929	121	737774	222
730018	201	730297	177	730929	122	737775	212
730018	202	730298	157	730929	149	737776	212
730025	146	730306	206	737009	167	737778	224
730084	212	730307	206	737010	162	737786	22
730085	212	730330	226	737010	164	737786	146
730088	179	730331	226	737010	167	737790	217

I N D I C E N U M E R I C O

NUM. DE PIEZA	PAGIN	NUM. DE PIEZA	PAGIN	NUM. DE PIEZA	PAGIN	NUM. DE PIEZA	PAGIN
737791	144	738319	199	78237	175	78792	166
737792	144	738322	200	78248	31	78861-78400	155
737794	144	738330	142	78248	108	78861-78400	158
737795	144	738331	142	78248	124	78921	152
737806	193	740099	30	78248	125	78924	121
737806	195	740101	27	78248	126	78944	150
737865	142	740104	31	78248	127	78944	151
737866	142	740106	30	78248	128	790021	102
737895	224	740106	31	78248	140	790027	102
737903	206	740153	27	78248	142	790030	102
737904	206	740165	25	78248	154	790032	102
737905	206	740165	26	78248	157	790106	166
737906	206	740202	25	78248	161	790120	17
737910	182	740202	26	78248	161	790129	167
737910	189	740203	25	78248	167	79013	140
737911	182	740203	26	78248	175	79013	152
737911	189	740204	25	78248	178	790146	99
737926	185	740204	26	78248	179	790147	99
737926	189	74236E1	149	78248	179	790201	4
737930	200	77704	210	78248	180	790209	46
737931	200	77704	215	78248	181	790210	46
738016	129	77707	193	78248	181	790211	46
738021	181	77707	197	78248	182	790213	46
738023	181	77707	211	78248	182	790214	46
738080	220	77707	212	78248	182	790215	46
738081	220	77789	111	78248	182	790217	124
738082	219	77814U80000	140	78248	185	790218	128
738083	218	77814U80000	205	78248	185	79023	176
738108	17	77861	48	78248	185	79023	176
738120	148	77993	150	78248	186	79023	176
738129	20	78120	59	78248	187	79023	177
738130	20	78120	207	78248	187	79023	177
738143	146	78121	121	78248	187	790243	48
738212	195	78121	122	78248	189	790245	24
738213	195	78121	175	78248	189	790247	121
738214	195	78137	152	78248	189	790247	122
738215	195	78137	152	78248	189	790248	121
738249	162	78137	156	78248	194	790248	122
738249	163	78137	156	78248	197	790250	42
738250	163	78137	175	78248	198	790254	103
738251	163	78137	176	78248	207	790255	103
738253	162	78137	229	78248	207	790255	104
738254	162	78140	185	78303	208	790255	105
738258	211	78140	187	78358	216	790255	106
738262	214	78140	211	78358	217	790256	103
738264	162	78140	213	78389	162	790256	105
738264	164	78140	213	78389	163	790257	103
738287	178	78140	214	78389	216	790257	105
738288	178	78177	193	78389	217	790258	103
738289	178	78177	196	78389	218	790258	105
738295	185	78177	211	78392	142	790259	103
738296	185	78177	212	78392	144	790259	105
738297	187	78205	208	78393	142	790260	103
738298	187	78210	176	78393	144	790260	105
738299	185	78210	177	78410	161	790261	103
738299	187	78210	181	78410	178	790261	105
738299	198	78210	182	78410	179	790262	103
738300	201	78210	185	78410	180	790262	105
738302	223	78210	187	78410	181	790263	103
738303	142	78210	189	78410	182	790264	103
738304	142	78210	207	78410	185	790264	105
738305	142	78210	215	78410	187	790265	103
738306	142	78227	52	78410	189	790265	105
738307	142	78227	101	78410	198	790267	103
738308	142	78227	120	78472-78000	155	790267	104
738311	218	78227	121	78472-78000	157	790267	105
738312	218	78227	123	78485	38	790267	106
738315	200	78233	146	78485	150	790268	103
738317	202	78233	162	78485	153	790268	104
738318	201	78233	163	78709	39	790268	105

I N D I C E N U M E R I C O

NUM. DE PIEZA	PAGIN	NUM. DE PIEZA	PAGIN	NUM. DE PIEZA	PAGIN	NUM. DE PIEZA	PAGIN
790268	106	790841	125	79239	150	AB610081	214
790269	103	790842	126	79239	151	AB610124	149
790269	105	790843	127	79240	40	AB614064	17
790270	103	790844	125	79242	108	AB614064	149
790270	105	790845	126	79245	149	ABR2254	168
790271	103	790848	168	79307	17	ABR5848	168
790271	105	790849	168	79307	18	AC606031	159
		790850	104	810002	100	ADU5727	158
790274	222	790850	106	810003	83	ADU5727	159
790281	42	790851	104	810003	85	AFU1242	57
790294	230	790851	106	810003	86	AFU1242	78
790295	230	790852	104	810003	130	AFU1242	83
790351	17	790852	106	810502	62	AFU1242	85
790352	17	790853	104	810502	131	AFU1242	88
790354	184	790853	106	810502	132	AFU1242	93
790355	184	790854	104	810502	133	AFU1242	95
790359	221	790854	106	810502	134	AFU1848	33
790359	222	790855	104	810502	135	AFU1882	2
790426	99	790855	106	810502	136	AFU1897	149
790427	99	790856	104	810502	137	AJ608041	18
79051	140	790856	106	810503	62	AJ608041	121
790755	52	790857	104	810503	73	AJ608041	122
790755	110	790857	106	810503	101	AK606011K1	40
790756	14	790858	104	810503	130	AK606011K1	214
790756	71	790858	106	810503	133	BAU4611L	21
790777	4	790859	104	850425	100	BFP1265	169
790778	4	790859	106	850425	100	BH106051	76
790779	4	790860	104	850425	109	BH106131	15
790782	21	790860	106	850425	139	BH108061	13
790783	21	790861	104	850621	6	BH108061	63
790784	21	790862	104	850621	50	BH108061	73
790785	21	790863	106	850621	125	BH108061	79
790786	21	790891	43	850621	126	BH108101	34
790791	49	790892	43	850621	127	BH108111	7
790808	218	790893	43	850621	129	BH108111	11
790809	218	790894	43	850621	130	BH108111	69
790810	218	790895	43	850641	125	BH108111	79
790812	47	790895	166	850641	126	BH108125	11
790813	103	790897	195	850641	127	BH108131	11
790813	104	790898	195	850641	129	BH108135	101
790813	105	790899	195	851317	229	BH108141	54
790813	106	790900	195	852467	100	BH108145	15
790814	105	790901	195	852467	100	BH108151	15
790814	106	790902	195	852467	109	BH108171	15
790815	105	790903	195	852467	139	BH108171	44
790816	105	790904	195	853035	130	BH108171	45
790817	119	790905	195	853035	139	BH108181	54
790818	119	790906	195	853775	100	BH108181	79
790819	43	790907	195	853775	100	BH110071	50
790820	43	790908	195	853775	109	BH110071	73
790821	43	790909	195	853775	139	BH110081	73
790822	43	790910	195	86124A63010	224	BH110091	50
790823	43	790911	195	88108757	68	BH110091	62
790824	43	790912	195	8885	25	BH110091	73
790825	123	790913	195	8885	26	BH110091	73
790826	102	790915	218	8885	101	BH110101	62
790827	102	790916	218	889655	139	BH110121	62
790828	102	790917	219	8G8837	52	BH110141	101
790829	102	790918	219	90622182	51	BH112101	92
790830	102	79103	18	AAP811	18	BH112101	94
790831	102	79103	108	AAP817	18	BHA4705	169
790832	102	79118PCH	214	AAP876	19	BHA4790	39
790833	102	79124	169	AAP889	18	BRC8089	147
790834	102	79156	38	AAU9942	114	BRC8965	168
790835	102	79192	176	AB606041	168	BX108301	101
790836	102	79192	176	AB606084	153	BX108351	70
790837	102	79192	176	AB606084	211	CR120125	77
790838	102	79192	177	AB606084	212	CR120215	76
790839	102	79192	177	AB610081	121	CRC1487	111
790840	102	79221	171	AB610081	122	CZA4705	121

I N D I C E N U M E R I C O

NUM. DE PIEZA	PAGIN	NUM. DE PIEZA	PAGIN	NUM. DE PIEZA	PAGIN	NUM. DE PIEZA	PAGIN
CZA4705	122	ERC9769F1	2	FRC2488	65	FRC3806	66
CZK3164	149	ERR1088	9	FRC2554	65	FRC3896	66
DBP5840PMA	168	ERR1510	5	FRC2555	65	FRC3897	65
DBP5841PMA	168	ERR2532	50	FRC2556	65	FRC3898	65
DBP6532PMA	168	ETC4014	6	FRC2577	70	FRC3898	65
DBP6533PMA	168	ETC4049K1	2	FRC2578	66	FRC3920K1	115
DRC1186	121	ETC4068	7	FRC2583	69	FRC3921K1	115
DRC1186	122	ETC4069	7	FRC2587	69	FRC3987	66
DZA1435	169	ETC4070	13	FRC2601	70	FRC4029	94
DZA5097	149	ETC4076	6	FRC2612	69	FRC4062	69
DZB3218K1	19	ETC4079	3	FRC2614	69	FRC4112F1	92
ERC1399	7	ETC4080	6	FRC2622	69	FRC4112F1	94
ERC1561	6	ETC4154	11	FRC2623	69	FRC4225	56
ERC2254	5	ETC4246	7	FRC2626	61	FRC4446	74
ERC2686	5	ETC4460	7	FRC2648	69	FRC4494	66
ERC3593	3	ETC4498	5	FRC2673	56	FRC4499	76
ERC3978	15	ETC4643	5	FRC3002	93	FRC4505	76
ERC4104	15	ETC4649K1	5	FRC3002	95	FRC4534	74
ERC4199	14	ETC4751	5	FRC3073	61	FRC4565	76
ERC4644	2	ETC4880	9	FRC3112	66	FRC4622	92
ERC4650	3	ETC5064	11	FRC3117	70	FRC4622	94
ERC4658	50	ETC5065	11	FRC3118	70	FRC4968	118
ERC4996	2	ETC5155	4	FRC3146	69	FRC5076	76
ERC5086	2	ETC5301	5	FRC3162	67	FRC5115	56
ERC5304	3	ETC5717	8	FRC3166	62	FRC5116	56
ERC5475	6	ETC7333	8	FRC3201	56	FRC5180K2	63
ERC5599	15	FRC0168	79	FRC3264	71	FRC5204	92
ERC5600	15	FRC1032	66	FRC3265	71	FRC5204	94
ERC5973	21	FRC1034	57	FRC3267	71	FRC5255	51
ERC5974	21	FRC1034	66	FRC3268	71	FRC5317K1	66
ERC5975	21	FRC1035	57	FRC3282	70	FRC5409	73
ERC5976	21	FRC1035	66	FRC3286	68	FRC5413	73
ERC6103	9	FRC1102	71	FRC3293	92	FRC5415	73
ERC6105	9	FRC1141	71	FRC3293	94	FRC5416	73
ERC6337	7	FRC1780	57	FRC3310	68	FRC5419	73
ERC6341	7	FRC1780	78	FRC3319	66	FRC5422	66
ERC6551	50	FRC1810	56	FRC3325	51	FRC5423	67
ERC6821	5	FRC1812	57	FRC3327	51	FRC5428K1	67
ERC7768	8	FRC1813	56	FRC3366	81	FRC5435	67
ERC7974	11	FRC1815	58	FRC3367F1	88	FRC5436	67
ERC7974	44	FRC2082F1	82	FRC3412	54	FRC5441	80
ERC7974	45	FRC2082F1	84	FRC3412	61	FRC5442	80
ERC8663	5	FRC2082K1	86	FRC3412	71	FRC5446	67
ERC8751	4	FRC2083F1	82	FRC3412	73	FRC5450	67
ERC8836	11	FRC2083F1	84	FRC3412	81	FRC5454F1	67
ERC8847	6	FRC2083K1	86	FRC3412	88	FRC5457	76
ERC8849	6	FRC2084	56	FRC3412	90	FRC5458	77
ERC8861	8	FRC2301F1	65	FRC3416	51	FRC5459	77
ERC8964	11	FRC2301F1	65	FRC3417	51	FRC5460	77
ERC8964	44	FRC2361	64	FRC3481	70	FRC5461	77
ERC8964	45	FRC2364	70	FRC3578	83	FRC5465	76
ERC8976	9	FRC2365	66	FRC3578	84	FRC5468	77
ERC8980	14	FRC2365	67	FRC3578	86	FRC5469	77
ERC9054	7	FRC2368	70	FRC3579	83	FRC5473	77
ERC9201	11	FRC2370	70	FRC3579	84	FRC5478	76
ERC9220	12	FRC2381	70	FRC3579	86	FRC5479	76
ERC9240	50	FRC2390	70	FRC3580	83	FRC5480	76
ERC9432	5	FRC2449	65	FRC3580	84	FRC5483	69
ERC9453	15	FRC2457	66	FRC3580	86	FRC5486	69
ERC9453	19	FRC2464	68	FRC3581	83	FRC5494	73
ERC9476K1	1	FRC2464	80	FRC3581	84	FRC5498	68
ERC9476K5	1	FRC2465F1	62	FRC3581	86	FRC5562	77
ERC9476K6	1	FRC2470	66	FRC3582	82	FRC5562	79
ERC9501	5	FRC2479	66	FRC3582	84	FRC5564	67
ERC9516	11	FRC2481	70	FRC3582	87	FRC5574	76
ERC9631	5	FRC2482	62	FRC3602K1	67	FRC5575	77
ERC9689	33	FRC2482	73	FRC3776	54	FRC5576	77
ERC9706	9	FRC2487	61	FRC3777	92	FRC5594	73
ERC9739F1	7	FRC2488	65	FRC3777	94	FRC5595	73
ERC9765	3	FRC2488	65	FRC3795	66	FRC5602	66

I N D I C E N U M E R I C O

****

NUM. DE PIEZA	PAGIN	NUM. DE PIEZA	PAGIN	NUM. DE PIEZA	PAGIN	NUM. DE PIEZA	PAGIN
FRC5603	66	FRC6525	79	FRC8403	65	MTC2808	121
FRC5604	66	FRC6526	79	FRC8404	65	MTC2808	122
FRC5605	66	FRC6527	79	FRC8405	65	MTC2827	150
FRC5606	66	FRC6528	80	FRC8406	65	MTC2864	147
FRC5607	66	FRC6529	80	FRC8409K1	66	MTC2864	148
FRC5608	66	FRC6536	67	FRC8421	66	MTC3862	140
FRC5609	66	FRC6537	67	FRC8422	65	MTC4145	152
FRC5610	66	FRC6538	67	FRC8452	70	MTC4400	147
FRC5611	66	FRC6539	67	FRC8452	70	MTC4400	148
FRC5612	66	FRC6540	67	FRC8454	70	MTC4618	149
FRC5613	66	FRC6541	67	FRC8455	70	MTC5212	211
FRC5614	66	FRC6542	67	FRC9524	61	MTC5212	212
FRC5615	66	FRC6543	67	FRC9556	65	MTC5459	121
FRC5616	66	FRC6544	67	FRC9568	51	MTC5459	122
FRC5617	66	FRC6545	67	G04011	13	MTC5698	225
FRC5652	77	FRC6546	67	G04043	12	MTC5699	225
FRC5661	92	FRC6547	67	G04052	15	MTC6006	19
FRC5661	94	FRC6548	67	G04069	21	MTC6006K1	20
FRC5668	73	FRC6549	67	G04098	19	MTC6007	19
FRC5681	67	FRC6550	67	GBS552	118	MTC6040	149
FRC5696F1	81	FRC6551	67	GBS552	119	MTC6080K1	150
FRC5696F1	88	FRC6552	67	G04099	67	MTC6142	149
FRC5696F1	94	FRC6571F1	76	G04137	17	MTC6167	150
FRC5816K2	69	FRC6861	67	G04137	20	MTC6167	151
FRC5896	58	FRC6862	67	G04137	101	MTC6194	19
FRC6027	77	FRC6872	69	G04137	120	MTC6382	17
FRC6030	77	FRC6873	69	G04185	15	MTC6382	18
FRC6050	76	FRC6889	77	GS112141	69	MTC6871	18
FRC6051	76	FRC6943	73	GWC305	115	MTC6871	150
FRC6053	76	FRC6996	56	GWC306	115	MTC7491K2	147
FRC6069	68	FRC7018	76	JBC9023	158	MTC7652	18
FRC6073K2	60	FRC7018	77	JBC9023	159	MTC7656	19
FRC6098	67	FRC7018	77	JRC1775	168	MTC7825	158
FRC6103	79	FRC7020	77	MRC1979	224	MTC7828	159
FRC6104	79	FRC7043	67	MRC1980	171	MTC8460	156
FRC6105	79	FRC7043	80	MRC1980	171	MTC8460	159
FRC6106	79	FRC7098	77	MRC2481	173	MTC8468	154
FRC6107	79	FRC7108	73	MRC3037	171	MTC8468	158
FRC6108	77	FRC7111	67	MRC3038	171	MTC8471	156
FRC6109	77	FRC7752	65	MRC4753	171	MTC8471	159
FRC6110	77	FRC7752	65	MRC4754	171	MTC8472	156
FRC6117	76	FRC7752	66	MRC4981K1	173	MTC8472	159
FRC6121	80	FRC7753	66	MRC4982K1	173	MTC8473	158
FRC6124	69	FRC7754F1	70	MRC5525	169	MTC8474	158
FRC6125	76	FRC7766	70	MRC6977K2	146	MTC8477	158
FRC6152K1	73	FRC7767F1	70	MRC6978K2	146	MTC8478	159
FRC6383K3	60	FRC7769F1	70	MRC7281K1	18	MTC8790	156
FRC6461	57	FRC8139	65	MRC7283	150	MTC8790	159
FRC6461	78	FRC8176	66	MRC8378	18	MTC8791	156
FRC6504	79	FRC8179	56	MRC8585	150	MTC8791	159
FRC6505	79	FRC8180F1	56	MRC8960K3	140	MTC9914	40
FRC6506	79	FRC8206	65	MRC9244	146	MTC9915	214
FRC6507	79	FRC8208	65	MRC9377K1	144	MTC9968	150
FRC6508	79	FRC8209	65	MRC9378K1	144	MUC1291	40
FRC6509	79	FRC8210	65	MRC9431	179	MUC1402	211
FRC6510	79	FRC8211	65	MRC9586	140	MUC1402	214
FRC6511	79	FRC8213	66	MRC9668	17	MUC1582	149
FRC6512	79	FRC8214	65	MRC9668	18	MUC1604	159
FRC6513	79	FRC8215	64	MRC9669	17	MUC1605	159
FRC6514	79	FRC8216	64	MRC9669	18	MUC1713F1	158
FRC6515	79	FRC8217	65	MRC9922	19	MUC1714F1	159
FRC6516	79	FRC8218	56	MRC9922	20	MUC1888	171
FRC6517	79	FRC8249	83	MRC9938	18	MUC1889	171
FRC6518	79	FRC8249	85	MRC9998	18	MUC2418	18
FRC6519	79	FRC8249	86	MTC1902	140	MUC2592	147
FRC6520	79	FRC8270	70	MTC1903	140	MUC2592	148
FRC6521	79	FRC8380	61	MTC2805	19	MUC2594	147
FRC6522	79	FRC8400	65	MTC2805	20	MUC2594	148
FRC6523	79	FRC8401	65	MTC2805	162	MUC3024	158
FRC6524	79	FRC8402	65	MTC2805	163	MUC3025	158

I N D I C E N U M E R I C O

NUM. DE PIEZA	PAGIN	NUM. DE PIEZA	PAGIN	NUM. DE PIEZA	PAGIN	NUM. DE PIEZA	PAGIN
MUC3036	214	MWC1736	179	NRC3449	135	RTC2626	3
MUC3037	214	MWC1737	179	NRC3449	136	RTC3635	123
MUC3285	158	MWC1812	168	NRC3449	137	RTC3745	149
MUC3285	159	MWC1813	168	NRC3472	131	RTC3745	149
MUC3492	159	MWC1837	171	NRC3472	132	RTC3745	149
MUC3493	159	MWC1838	171	NRC3882F1	131	RTC3745	152
MUC3530	147	MWC1900	159	NRC3882F1	136	RTC4201	18
MUC3530	148	MWC2314	211	NRC3885F1	133	SA108251	73
MUC3531	147	MWC2314	212	NRC3885F1	134	SB108201	61
MUC3531	148	MWC2324K2	158	NRC3885F1	137	SE105124	149
MUC3733	147	MWC2325K2	158	NRC3888K1	131	SE105161	19
MUC3733	148	MWC2340K2	158	NRC3891F2	131	SE105161	122
MUC3766K1	195	MWC2341K2	158	NRC3891F2	132	SE106121	150
MUC3767K1	195	MWC2346K2	159	NRC3892F2	131	SE106161	179
MUC4071	154	MWC2347K2	159	NRC3892F2	132	SE110401	147
MUC4071	158	MWC2502K2	159	NRC3895F1	132	SE110401	148
MUC4072	154	MWC2503K2	159	NRC3896F1	132	SE604071	224
MUC4072	157	MWC2780	214	NRC3897F1	133	SE808244	19
MUC4072	158	MWC2781	214	NRC3897F1	136	SE808244	20
MUC4072	159	MWC2782	214	NRC3898F1	133	SF106161	168
MUC4073	158	MWC2783	214	NRC3898F1	136	SF106201	76
MUC4073	159	MWC3136	214	NRC4287	111	SF106201	146
MUC4471	163	MWC3136	214	NRC4346	99	SG103084	19
MUC4474	163	MWC3137	214	NRC4475	22	SG103084	20
MUC4481	163	MWC3148	168	NRC5310	16	SG103084	162
MUC4481	169	MWC4412	159	NRC5502	22	SG103084	163
MUC4486	163	MWC4413	159	NRC8253H1	22	SH104101	159
MUC4542	195	MWC4846	169	NT108041	7	SH105121	152
MUC4544	163	MWC4850	169	NT108041	76	SH106101	69
MUC4545	163	MWC5001	169	NY106041	68	SH106101	158
MUC6157	172	MWC5002	169	NY106041	122	SH106101	159
MUC6158	171	MWC9327PUA	149	NY106041	172	SH106161	6
MUC6159	171	MWC9339	149	NY108041	23	SH106161	11
MUC6163	171	MXC2726	168	NY108041	77	SH106161	63
MUC6164	171	MXC2727	168	NY108041	101	SH106161	111
MUC6665	171	MXC2728	168	NY108041	131	SH106201	69
MUC7599	121	MXC2729	168	NY108041	134	SH106201	111
MUC7599	122	MXC4738	168	NY108041	135	SH106201	179
MUC7809	168	MXC9586	160	NY120041	68	SH106204	211
MUC7903	147	MXC9587	160	NY120041	80	SH106204	214
MUC7903	148	NH104041	159	PA105101	5	SH106251	69
MUC7904	147	NH104041	169	PA105161	22	SH106301	63
MUC7904	148	NH105041	121	PC105401	76	SH108161	13
MUC7905	150	NH106041	63	PC106561	70	SH108201	5
MUC8364	169	NH106041	111	PC108321	76	SH108201	11
MUC8365	169	NH106041	146	PC108401	76	SH108201	13
MUC8526	168	NH108041	8	PRC2443K1	150	SH108201	73
MUC9312	158	NH108041	13	PRC2471	39	SH108201	73
MUC9313	158	NH108041	14	PRC3037	147	SH108201	101
MUC9324	159	NH108041	16	PRC3672	39	SH108201	108
MUC9325	159	NH108041	21	PRC4174	39	SH108201	223
MWC1434	158	NH108041	33	PRC4449	123	SH108251	9
MWC1435	158	NH108041	34	PRC4454	123	SH108251	11
MWC1474	214	NH108041	73	PRC4471	40	SH108251	11
MWC1474	214	NH110041	50	PRC4613	40	SH108251	13
MWC1476	168	NH110041	55	PRC5598	121	SH108251	13
MWC1477	168	NH110041	62	PRC5598	122	SH108251	45
MWC1480	169	NH110041	63	PRC5736	221	SH108251	51
MWC1481	169	NH110041	73	PRC5736	222	SH108251	69
MWC1484	169	NRC0062	27	PRC5802	222	SH108251	76
MWC1485	169	NRC1269	109	PRC6295	41	SH108251	77
MWC1486	169	NRC2052	130	PRC8495	39	SH108251	79
MWC1487	169	NRC3411F1	99	PS103101	76	SH108251	120
MWC1488	168	NRC3448	133	PS103121	70	SH108301	11
MWC1489	168	NRC3448	134	PS104121	76	SH108301	15
MWC1492	169	NRC3448	135	RA608177	163	SH108301	24
MWC1493	169	NRC3448	136	RR0604	51	SH108301	44
MWC1602	159	NRC3448	137	RTC0602	16	SH108301	45
MWC1603	159	NRC3449	133	RTC0602	37	SH108301	61
MWC1627	159	NRC3449	134	RTC198	39	SH108301	64

I N D I C E N U M E R I C O

NUM. DE PIEZA	PAGIN	NUM. DE PIEZA	PAGIN	NUM. DE PIEZA	PAGIN	NUM. DE PIEZA	PAGIN
SH108301	70	WL108001	13	WM108001	146		
SH108301	70	WL108001	13	WM108001	155		
SH108401	69	WL108001	13	WM108001	157		
SH108405	54	WL108001	14	WM108001	161		
SH110301	10	WL108001	21	WM108001	165		
SH110301	50	WL108001	21	WM108001	165		
SH110301	50	WL108001	33	WM108001	165		
SH110301	73	WL108001	44	WM108001	166		
SH112251	1	WL108001	45	WM108001	170		
SH112301	1	WL108001	51	WM108001	170		
SH112451	63	WL108001	55	WM108001	171		
SP105204	121	WL108001	61	WM108001	174		
SP105204	153	WL108001	61	WM108001	181		
SU112101	77	WL108001	63	WM108001	182		
SU112101	79	WL108001	64	WM108001	190		
SX108201	44	WL108001	69	WM108001	190		
SX108201	45	WL108001	69	WM108001	190		
SX108201	50	WL108001	73	WM108001	190		
SX108201	140	WL108001	73	WM108001	191		
TD108091	7	WL108001	73	WM108001	191		
TE108031	2	WL108001	76	WM108001	194		
TE108031	14	WL108001	77	WM108001	194		
TE108041	13	WL108001	79	WM108001	195		
TE108041	73	WL108001	101	WM108001	196		
TE108055	5	WL110001	10	WM108001	197		
TE108071	5	WL110001	50	WM108001	207		
TE108075	5	WL110001	50	WM108001	216		
TE110061	50	WL110001	62	WM108001	216		
UKC0024	73	WL110001	73	WM108001	217		
UKC2089	70	WL110001	73	WM108001	217		
UKC2105	70	WL110001	73	WM108001	217		
WA104001	168	WL112001	1	WM108001	218		
WA105001	17	WL112001	63	WM108001	223		
WA105001	18	WM106001	111	WM108001	223		
WA105001	19	WM106001	111	WS600091	161		
WA105001	122	WM108001	9	Y000451PMA	214		
WA106041	68	WM108001	11	Y003199PMA	158		
WA106041	70	WM108001	16	Y003199PMA	159		
WA106041	122	WM108001	16	Y003200PMA	158		
WA106041	149	WM108001	18	Y003200PMA	159		
WA106041	158	WM108001	24				
WA106041	159	WM108001	35				
WA108051	11	WM108001	44				
WA108051	11	WM108001	44				
WA108051	15	WM108001	45				
WA108051	54	WM108001	45				
WA108051	61	WM108001	45				
WA108051	70	WM108001	50				
WA108051	70	WM108001	54				
WA108051	76	WM108001	59				
WA108051	77	WM108001	61				
WA110061	55	WM108001	71				
WA110061	63	WM108001	74				
WC105004	121	WM108001	78				
WE104001	160	WM108001	78				
WF703084	121	WM108001	101				
WF703084	122	WM108001	107				
WL106001	6	WM108001	108				
WL106001	11	WM108001	110				
WL106001	15	WM108001	116				
WL106001	15	WM108001	120				
WL106001	63	WM108001	120				
WL106001	69	WM108001	120				
WL106001	69	WM108001	125				
WL106001	76	WM108001	126				
WL106001	158	WM108001	127				
WL106001	159	WM108001	140				
WL106004	211	WM108001	140				
WL106004	214	WM108001	140				
WL108001	5	WM108001	140				