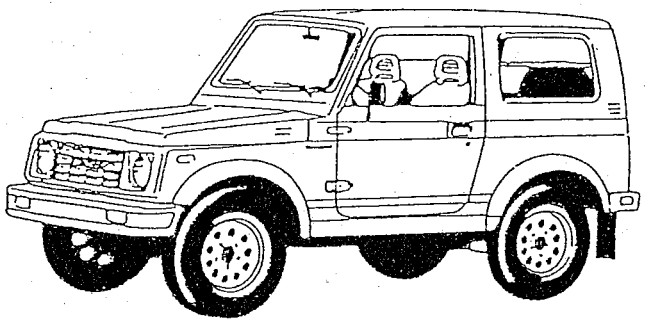

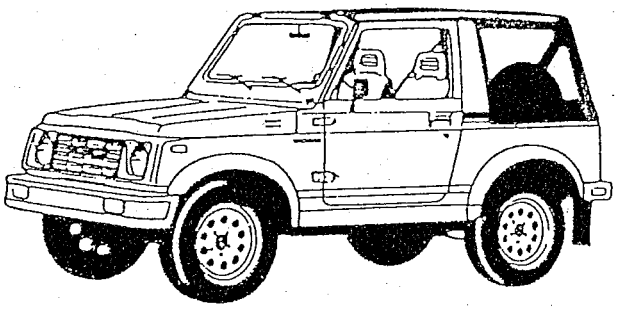

SUZUKI

samurai

1000

CATALOGO DE RECAMBIOS
PARTS CATALOGUE
CATALOGUE DE PIECES DETACHEES

SUZUKI
Satisfacción al Cliente
Pub-00000A01116

INFORMACION GENERAL

Este catálogo de repuestos contiene todas las piezas de servicio para el vehículo SAMURAI MIL en sus versiones: Carburación, conducción izquierdas y conducción derechas,todos ellos en techo metálico 'V', convertible 'J', standard y lujo.

Existen tres tipos de vehículos

TIPO 1 (TI)

TODOS LOS MERCADOS : hasta bastidor nº 111.169

TIPO 2 (T2)

TODOS LOS MERCADOS: desde bastidor nº 111.170

TIPO 3 (T3) - MODELO 92

TODOS LOS MERCADOS: desde bastidor nº 124.806

COMO UTILIZAR EL CATALOGO

Para utilizar más rapidamente este catálogo, tenga en cuenta estas observaciones :

1- Conociendo el número de referencia, dirigirse al final del catálogo donde se encuentra el índice numérico, ordenado de menor a mayor. Localizada la referencia, observará que a continuación, aparece el número de página donde se encuentra la referencia.

2- Conociendo donde se monta una referencia o al grupo al que pertenece, dirigirse al índice de figuras y localice el número de figura correspondiente.

3- Un grán conjunto puede buscarse en la página nº 122 " Grandes Conjuntos " o bién en el grupo correspondiente.

4- Cuando busque una referencia, tenga en cuenta :

a)- Versión del vehículo : techo metálico o convertible, standard o lujo, inyección o carburación, conducción izquierdas o conducción derechas.

b)- Número de chasis, motor o caja de cambios.

c)- Si se trata de una pieza nacional o japonesa.

d)- Si la pieza es de color, debe buscar la de su color o la que exista preparada para pintar.

5- Cuando cambien una pieza de un conjunto, asegúrese que la nueva pertenece al mismo proveedor y conjunto. El montaje de una pieza distinta a la especificada puede ocasionar problemas de funcionamiento.

6- Código de especificación.
Este catálogo contiene las piezas para el modelo diseñado para las siguientes especificaciones :
E01, E02, E04, E10, E11, E18, E19, E20, E22, E25, E29, E34, E39, E41, E44, E53, E54, E56, E57, E89, E90, E94 Y E99.

8- Significado de las expresiones que aparecen en las observaciones y que no están reflejadas en el apartado de abreviaturas :

ALTERN. = indica que para esta posición existen más de una referencia, pudiéndose montar cualquiera de ellas.
D = pieza montada desde el número de chasis indicado.
VALEO = indica el nombre del fabricante de la pieza.
H = pieza montada hasta el número de chasis indicado.
JA = vehículo standard.
JH = techo de fibra.
JX = vehículo lujo.
L:300=120 ..... la primera cifra (300) indica la longitud en que se sirve la pieza de repuesto; la segunda cifra (120) indica la longitud de la pieza.
N.1 = vehículo industrial

ABREVIATURAS

A

1/2 = Según observaciones
A/ACOND. = Aire acondicionado
ABRAZ. = Abrazadera
ACCIO. = Accionamiento
ACOND.=Acondicionado
ADM. = Admisión
ALIM. = Alimentación
ALOJ. = Alojamiento
ALT. = Alternador
ALTERN. = Alternativo
ALU. = Aluminio
AMI. = Amianto
ANAGR. = Anagrama
APERT. = Apertura
AUTOBL. = Autoblocante
AUTOM. = Automático

C

C/ = Conjunto (en denominación)
Con (en observaciones y subtítulo grupo)
CAJ. = Caja
CAL. = Calefacción
CALEF. = Calefactor
CAMB. = Cambio
CARB. = Carburación
CARBU. = Carburador
CARRO. = Carrocería
CENTR. = Central
C.C. = Cierre centralizado
CH. = Chasis
CIL. = Cilindro
COL. = Colector
CIGU. = Cigüeñal
"C/M" = " Campeón por marca "
COLUM. = Columna
COMB. = Combustible
COMP. = Compuerta
COMPL. = Completo
COMPR. = Compresor
CONDUC. = Conducto
CONTR. = Control
C/V.L. = Con ventana lateral

D

D.A. = Dirección asistida
DEL. = Delantero
DEPOS. = Depósito
DESEMP. = Desempañador
D/HIDR. = Dirección hidráulica
DIF. / DIFER. = Diferencial
DIR. = Dirección
DISTR. = Distribución
DISTRIB. = Distribuidor
D.M. = Dirección mecánica

E

E.E. = Elevalunas eléctrico
ELEC. = Eléctrico
ELEV. = Elevalunas
EMBR. = Embrague
ENGRAN. = Engranaje
ENTR. = Entrada
EQUI. = Equipo
E.R.E. = Espejo retrovisor eléctrico
ESC. = Escape

F

FIG. = Figura
FIJ. = Fijación
FIL./ FILT. = Filtro
FUS. = Fusible

G

GUARDAP. = Guardapolvos

H

HORQ. = Horquilla

I

INF. = Inferior
INT. = Interior
INSON. = Insonorizante
INSTR. = Instrumento
INTER. = Intermitencia/ intermitente
INTERM. = Intermedio
INTERRUP. = Interruptor
INY. = Inyección

J

J. = Junta
J/ = Juego

K

K/ = Kit

L

LAT. = Lateral
LATIG. = Latiguillo
LD = Lado derecho
LHD = Conducción derechas
LI = Lado izquierdo
L.T. = Luneta térmica

LL

LLEN. = Llenado

M

M.A. = Marcha atrás
MANGU. = Manguito
MECA. = Mecánico
MOT. = Motor

N

NAC. = Nacional (en observaciones)
NEUM. = Neumático
N.M. = Nacional - manual (en observaciones)

P

PARABR. = Parabrisas
P.P. = Power pack (Paquete Potencia)
PRINC. = Principal
PTA = Puerta

R

RAD. = Radiador
R.E. = Retrovisor eléctrico
RESP. = Respiradero

RET. = Retención
RETR. = Retrovisor
R.L. = Rueda libre
RHD = Conducción derechas
RODAM. = Rodamiento

S

S/ = Sin
SAL. = Salida
SALP.= Salpicadero
SEGUR.= Seguridad
SEL.= Selección
SELEC. = Selector
SILENC. = Silencioso/ silenciador
SILENTB. = Silentblock
SINCR. = Sincronizado/ sincronizador
SIS. = Sistema
S/N = Según necesidad (en cantidad)
SOLEN. = Solenoide
S/R = Sin representar (en observaciones)
STD = Standard
SUP. = Superior
S/V.L. = Sin ventana lateral

T

5 T = Cinco tomas
TAPIC. = Tapicería
TEMP. = Temperatura
TORN. = Tornillo
TRANSF. = Transferencia
TRANSV. = Transversal
TRAS. = Trasero
TRAV. = Travesaño
TUB. = Tubería

V

3 V = Tres vías
VALV. = Válvula
VEH. = Vehículo
VELO. = Velocidad
VELOCI. = Velocímetro
VENT. = Ventilación
VENTIL. = Ventilador
V/RET. = Válvula de retardo

GENERAL INFORMATION

Thi s spare parts catalogue contains all the service parts for the SAMURAI MIL vehicle in all its version : Carburation , right and left hand driving, all in ' V ' metallic roof, ' J ' convertible, standard and de luxe.

There three types of vehicles :

TYPE 1 (T1)

ALL THE MARKETS : until chassis nº 111.169

TYPE 2 (T2)

ALL THE MARKETS : from chassis nº 111.170

TYPE 3 (T3) - 92 MODEL

ALL THE MARKETS: from chassis nº 124.806

HOW TO USE THE CATALOGUE

To use the catalogue more efficiently, take into account the following points :

1- Knowing the reference number, see at the end of the catalogue the numerical index, ordered from the smallest to the biggest. Once you have the reference, next to it, you will see a number that corresponds to the page where is situated the reference.

2- Knowing where this reference is mounted, or the groups to which it belongs, see the figures index and situate the corresponding figure number.

3- An assembly part can be searched in page nº 122 "Assembly Parts" or in the corresponding group.

4- When you look for a reference, take into account the following points :

a)- Vehicle version : convertible or metallic roof, standard or de luxe, injection or carburation, left hand or right hand driving.

b)- Chassis, engine or gearbox number.

c)- If it is a national or a Japanese part.

d)- If the part is in colour, you must look for the one of its colour or another one which is prepared for being painted.

5- When you change a part of an assembly, be sure that the new part belongs to the same supplier and assembly. The mounting of a part different from the one specified can create operation problems.

6- Specifications codes.
This catalogue contains the parts of the model designed for the following specifications :
E01, E02, E04, E10, E11, E18, E19, E20, E22, E25, E29, E34, E39, E41, E44, E53, E54, E56, E57, E89, E90, E94 and E99.

8- Meaning of the expressions appearing in observations and that do not exist in the abbreviations paragraph :

ALTERN. = indicates that, for this position, there are more than a reference which can be mounted in the same position.
D = part mounted from the chassis number indicated.
VALEO = indicates the part manufacturer name.
H = part mounted until the chassis number indicated.
JA = standard vehicle.
JH = hard top
JX = de luxe vehicle.
L:300=120 ..... the first number (300) indicates the length in which the spare part is served; the second number (120) indicates the part length.
N.1 = industrial vehicle.

ABBREVIATIONS

A

1/2 = According to observations
A/ or ASSY = Assembly
ABES. = Abestos
A/COND. = Air conditioning
ALT. = Alternator
ALTERN. = Alternative
ALU. = Aluminium
ANAGR. = Anagram
AUTOBL. = Autoblocking
AUTOM. = Automatic

B

BRACK. = Bracket

C

C/ = With (in observations & group subtitle)
CARB. = Carburation
CARBU. = Carburetter
CENTR. = Central
C.C. = Centralized lock
C/CALEF. = With heater
CH. = Chassis
"C/M" = " Campeón por marca "
COL. = Column
COMPL. = Complete
COMPR. = Compressor
CONDUC.TRAS. = Rear duct
CONTR. = Control
CRANK. = Crankshaft
CROSS. = Crossmember
C/V.L. = with side window
CYL. = Cylinder

D

D.A. = Power Steering
DIFF. = Differential
DISTRIB. = Distributor
D/VALVE = Delayed valve

E

E.E. = Power window
ELEC. = Electric
ENG. = Engine
EQUI. = Equipment
E.R.E. = Electric rear view mirror
EXH. = Exhaust

F

FAST. = Fastening
FIG. = Figure
FIL. / FILT. = Filter
FIX. = Fixing
FR. = Front

H

HOUS. = Housing

I

IN. = Interior / inner
INJ.= Injection
INTER. = Intermitencia
INL. = Inlet
INSTR. = Instrument
INTERM. = Intermediate

K

K/ = Kit

L

LH = Left Hand
LHD = Left hand driving.
LOW. = Lower / inferior
L.T. = Rear defroster

M

N/ = Without
NAT.= Nacional (in observations)
NEUM. = Neumatic
N.M. = National-manual (in observations)

O

OPEN.= Opening
OUT. = Outer

P

POL. = Polyester
P.P. = Power Pack
PRINC. = Principal
P.S. = Power steering

R

RAD. = Radiator
RET. = Retaining / retainer
RH = Right hand
RHD = Right hand driving
R.L. = Free wheel
ROCK. = Rocker arm
RR = Rear
RUB. = Rubber

S

S. = Set
S/ = Side & without (in observations)
SEL.= Selection
SELEC. = Selector
SILENTB. = Silentblock
S/N = According to necessity (in quantity)
SOLEN. = Solenoid
SP = Spare
S7R EPRESENTAR = Without represention
STEER. = Steering
STD = Standard
ST/COL.= Steering column
SUPP. = Support
S/V.L. = Without side window
SYNCHR. =Synchronizer
SYS. = System

T

TEMP. =Temperature
TH/B = Throttle body

U

UP.= Upper / superior

V-W

VEH. = Vehicle

VENT. = Ventilation
VENTIL. = Ventilator
W/ = With
WINDSC.= Windscreen

INFORMATION GENERALE

Ce catalogue de pièces de rechange contient toutes les pièces de service pour le véhicule SAMURAI MIL dans toutes ses versions : Carburation, conduite à gauche et à droite, tous en toit métallique ' V ', convertible ' J ', standard et luxe.

Il existe trois types de véhicules :

TYPE 1 (T1)

TOUTES LES MARCHES : jusqu'au châssis nº 111.169

TYPE 2 (T2) - CARBURATION

TOUTES LES MARCHES : depuis le châssis nº 111.170

TYPE 3 (T3) - MODELE 92

TOUTES LES MARCHES : depuis le châssis nº 124.806

COMMENT UTILISER LE CATALOGUE

Pour utiliser plus rapidement ce catalogue, tenez compte des observations suivantes :

1- Connaissant le numéro de référence, aller à la fin du catalogue où se trouve l'index numérique, ordonné dans un ordre croissant. Une fois située la référence, vous observerez qu'à la suite apparaît un numéro de page où se trouve la référence.

2- Sachant où se monte une référence ou le groupe auquel elle appartient, aller à l'index des figures et situer le numéro de figure correspondant.

3- Un grand ensemble peut être cherché à la page nº 122 " Grands Ensembles " ou dans le groupe correspondant.

4- Lorsque vous cherchez une référence, tenez compte de :

a)- Version du véhicule : toit métallique ou convertible, standard ou luxe, injection ou carburation, conduite à droite ou à gauche.

b)- Numéro de châssis, moteur ou boîte de vitesses.

c)- S'il s'agit d'une pièce nationale ou japonaise.

d)- Si la pièce est de couleur, il faut chercher celle de sa couleur ou celle qui est préparée pour être peinte.

5- Lorsque vous changez une pièce d'un ensemble, assurez-vous que la nouvelle appartient au même fournisseur et ensemble. Le montage d'une pièce différente de celle spécifiée peut créer des problèmes de fonctionnement.

6- Codes de spécifications.
Ce catalogue contient les pièces pour le modèle dessiné pour les spécifications suivantes :
E01, E02, E04, E10, E11, E18, E19, E20, E22, E25, E29, E34, E39, E41, E44, E53, E54, E56, E57, E89, E90, E94 et E99.

8- Signification des expressions apparaissant dans les observations et qui ne sont pas reflétées dans le paragraphe des observations :

ALTERN. = indique que, pour cette position, il existe plus d'une référence pouvant être interchangeables entre elles.
D = pièce qui se monte à partir du numéro de châssis indiqué.
VALEO = indique le nom du fabriquant de la pièce.
H = pièce qui se monte jusqu'au numéro de châssis indiqué.
JA = véhicule standard.
JH = toit fibre.
JX = véhicule luxe.
L:300=120 ..... le premier chiffre (300) indique la longueur dans laquelle est servie la pièce de rechange; le second chiffre (120) indique la longueur de la pièce.
N.1 = véhicule industriel.

ABREVIATIONS

A

1/2 = Selon observations
A/ = Avec
A/COND. = Air conditionné
ADM. = Admission
ALIM. = Alimentation
ALT. = Alternateur
ALTERN. = Alternative
ALU. = Aluminium
AMI.= Amiante
ANAGR. = Anagramme
ARR. = Arrière
AUTOBL. = Autobloquant
AUTOM. = Automatique
AV= Avant

C

C/ = Avec (dans observations & sous-titre groupe)
CAOUT. = Caoutchouc
CARB. = Carburation
CARBU. = Carburateur
CENTR. = Central
C.C. = Fermeture centralisée
C/CALEF.= Avec chauffage
CD = Côté droit
CG = Côté gauche
CH. = Chassis
CHAUFF. = Chauffage
"C/M" = " Campeón por marca "
COL. = Colonne
COLL. = Collecteur
COMPL. = Complet
COMPR. = Compresseur
CONDUC.TRAS. = Conduit arr.
CONTR. = Contrôle
COUV. = Couvercle
CYL. = Cylindre
C/V.L. = Avec fenêtre latérale

D

D.A. = Direction assistée
DIFF. = Différentiel
D/HIDR. = Direction hydraulique
DIR. = Direction
DISTR. = Distribution
DISTRIB. = Distributeur

E

E/ = Ensemble
E.E. ou L.V.E. = Lève-vitre électrique
ECHAPP. = Echappement
ELEC. = Electrique
EMBR. = Embrayage
ENGR. = Engrenage
EQUI. = Equipement
E.R.E. = Miroir rétroviseur électrique

F

FERM. = Fermeture
FIG. = Figure
FILT. = Filtre
FIX. = Fixation
FUS. = Fusible

G

GARNIT. = Garniture

I

INF. = Inférieur
INJ. = Injection
INT.= Intérieur
INSON. = Insonorisant
INSTR. = Instrument
INTERM. = Intermédiaire
INTERRUP. = Interrupteur

J

J.= Joint
J/ = Jeu

K

K/ = Kit

L

LAT. = Latéral
LHD = Conduite à gauche
LOG. = Logement
L.T. = Lunette thermique

M

M.A. = Marche arrière
MECA. = Mécanique
MOT. = Moteur

N

NAT. = National (dans observations)
N.M. = National - manuel (dans observations)

P

PAREB. = Parebrise
POL. = Polyester
P.P. = Power Pack
PRINC. = Principal
PTE = Porte

R

RAD. = Radiateur
R.E. = Rétroviseur électrique
REFR. = Refroidissement
REMPL. = Remplissage
RESP. = Respirateur
RETEN .= Retenue / rétention
RHD = Conduite à droite
R.L. = Roue libre
ROUL. = Roulement

S

S/ = Sans
SEC. = Secours
SECUR. =Sécurité

S/N = Selon nécessité (dans quantité)
SOLEN. = Solénoide
S/R = Sans représentation (dans observations)
S/RET. = Soupape de retard
STAB. = Stabilisatrice
STD = Standard
SUP. = Supérieur
SUPP. = Support
SUPPL. = Supplement
S/V.L. = Sans fenêtre latérale
SYNCHR. = Synchronisé
SYS. = Système

T

TAB.BORD = Tableau de bord
TEMP. = Température
TRANSF. = Transfert
TUY. = Tuyauterie

V

VEH. = Véhicule
VELOCI. = Vélocimètre
VENT. = Ventilation
VENTIL.= Ventilateur
VILEBREQ. = Vilebrequin
VIT. = Vitesse

- ABREVIATURAS EN COLUMNA "OBSERVACIONES" -
- ABBREVIATIONS IN THE "OBSERVATIONS" COLUMN -
- ABREVIATIONS DANS LA COLONNE "OBSERVATIONS" -

A

ALTERN. = Alternativo / Alternative / Alternatif
ALTERN. IN INJ. = Alternativo en inyección / Alternative in injection / Alternatif en injection

C

CARB. = Carburación / Carburation / carburation

D

DEC.= Diciembre / December / Décembre

E

ENG. = Motor / Engine / Moteur

G

'GREY HUELLA' = Huella gris / Grey mark / Trace grise
'GREY MATERIAL' = Tela gris / / Tissu gris

H

HIGH ROOF = Techo elevado / / Toit élevé

I

INJ. = Inyección / Injection / Injection

J

'J' = Vehículo 'J' / 'J' vehicle / Véhicule 'J'
JAN. = Enero / January / Janvier

L

L.BODY / L.B. / LB = Long Body
LHD = Conducción izquierdas / Left hand driving / Conduite à gauche
LINKED TO POS. = Unido a posición / Linked to position / Lié à position

M

MAY = Mayo / / Mai

N

N/ / NO = Sin / Without / Sans
NO ABESTOS = Sin amianto / Without abestos / Sans amiante
N/ AIR COND. = Sin aire acondicionado / Without air conditioning / Sans air conditionné
NO HEAT PRINT = Sin luneta térmica / Without heat print / Sans lunette thermique
NO HEATER = Sin calefactor / Without heater / Sans chauffage
NO S.W = Sin ventana lateral / Without side window / Sans fenêtre latérale
NOT SHOWN = Sin representar / / Sans représentation
NOV. = Noviembre / November / Novembre

S

SERV.INF. = Información de servicio / Service information / Information de service
SHORT = Corto / / Court
S.W. = Ventana lateral / Side window / Fenêtre latérale

W

W/ = Con / With / Avec
W/ ABESTOS = Con amianto / With abestos / Avec amiante
W/ AIR COND. = Con aire acondicionado / With air conditioning / Avec air conditionné
W/ HEAT PRINT = Con luneta térmica / / Avec lunette thermique
W/ HEATER = Con calefactor / / Avec chauffage
W/ SW.. = Con ventana lateral / With side window / Avec fenêtre latérale

CUADRO DE COLORES
COLOUR CHART
TABLEAU DES COULEURS

Nº DE COLOR COLOUR Nº Nº DE LA COULEUR	DESCRIPCION DEL COLOR COLOUR DESCRIPTION DESCRIPTION DE LA COULEUR
D56	20V, 0PG
K58	6NN, 6NP, 6NR, 5GT
K59	6GT, 5NR
L45	6PV, 6PU, 5GT
L46	6PV, 5GT
L84	1LJ, 1GF, 0ND
L85	1GL, 1GF, 0ND
0DG	NEGRO SATURNO METALICO / METALLIC SATURN BLACK / NOIR SATURNE METALLIQUE
0ND	PLATA BRILLANTE / LIGHT SILVER / ARGENT BRILLANT
0PG	CROMADO / CHROME / CHROMÉ
1FG	AZUL DEEP PEARL / DEEP PEARL BLUE / BLEU DEEP PEARL
1FH	AZUL TRITON METALICO / METALLIC TRITON BLUE / BLEU TRITON METALLIQUE
1GF	AZUL PURPURA / PURPLE BLUE / BLEU POURPRE
1GL	ROSA / PINK / ROSE
1LJ	VERDE BRILLANTE / BRILLIANT GREEN / VERT BRILLANT
19H	VERDE ESMERALDA / EMERALD GREEN / VERT EMERAUDE
20V	GRIS METALICO / METALLIC GREY / GRIS METALLIQUE
21G	GRIS KENIA METALICO / METALLIC KENYA GREY / GRIS KENYA METALLIQUE
26U	BLANCO SUPERIOR / SUPERIOR WHITE / BLANC SUPERIEUR
37V	ROJO / RED / ROUGE
38B	GRIS METALICO / METALLIC GREY / GRIS METALLIQUE
382	NEGRO / BLACK / NOIR
4GF	BEIGE CON GRIS / GREYISH BEIGE / BEIGE GRIS
4KJ	BEIGE CON GRIS / GREYISH BEIGE / BEIGE GRIS
4KW	BEIGE CON GRIS / GREYISH BEIGE / BEIGE GRIS
40U	NEGRO AVENTURA / ADVENTURE BLACK / NOIR AVENTURE
45R	GRIS NEUTRO / NEUTRAL GREY / GRIS NEUTRE
46Z	NEGRO / BLACK / NOIR
48B	NEGRO NIEVE / SNOW BLACK / NOIR NEIGE
5CW	MARRON COÑAC / COGNAC BROWN / MARRON COGNAC
5EB	GRIS / GREY / GRIS
5ES	NEGRO / OFF BLACK / NOIR
5GT	NEGRO / OFF BLACK / NOIR
5GU	NEGRO / OFF BLACK / NOIR
5JP	NEGRO / OFF BLACK / NOIR
5JR	NEGRO / OFF BLACK / NOIR
5PK	NEGRO / BLACK / NOIR
5WA	GRIS OSCURO / DARK GREY / GRIS SOMBRE

CUADRO DE COLORES
COLOUR CHART
TABLEAU DES COULEURS

Nº DE COLOR COLOUR Nº Nº DE LA COULEUR	DESCRIPCION DEL COLOR COLOUR DESCRIPTION DESCRIPTION DE LA COULEUR
55M	NEGRO EXCELENTE / EXCELLENT BLACK / NOIR EXCELENT
6EP	LONA SUPER BLANCO / SUPER WHITE CANVAS / BACHE BLANC SUPER
6ER	LONA SUPER BLANCO / SUPER WHITE CANVA S / BACHE BLANC SUPER
6NN	TELA GRIS / GREY KNIT / TISSU GRIS
6NP	TELA NEGRA / BLACK KNIT / TISSU NOIR
6NR	LUMINOSO (GRIS OSCURO) / LUMINEUX (DARK GREY) / LUMINEUX (GRIS SOMBRE)
6PU	NEGRO / BLACK BIAS / NOIR
6PV	MARRON GEOMETRIA / GEOMETRY BROWN / MARRON GEOMETRIE

FIG.1 B-02

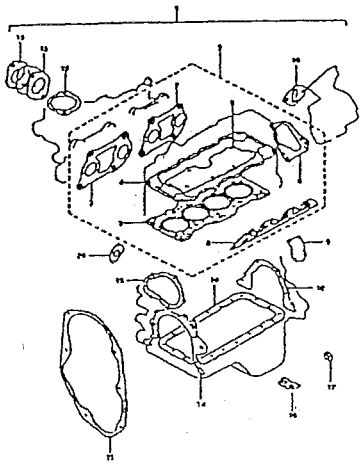

FIG.2 B-03

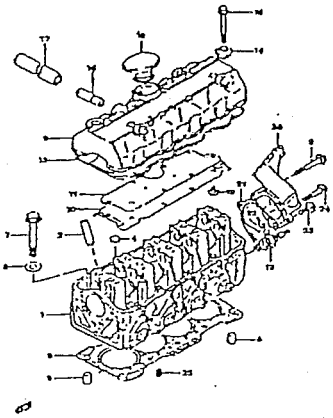

FIG.3 B-04

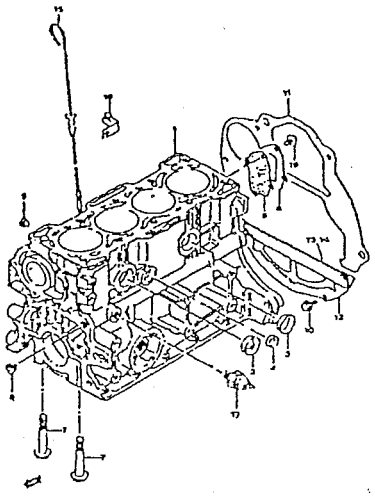

FIG.4 B-05

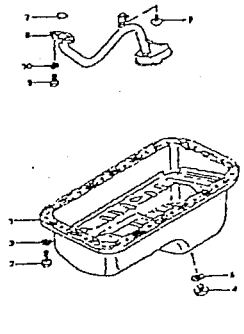

FIG.5 B-06

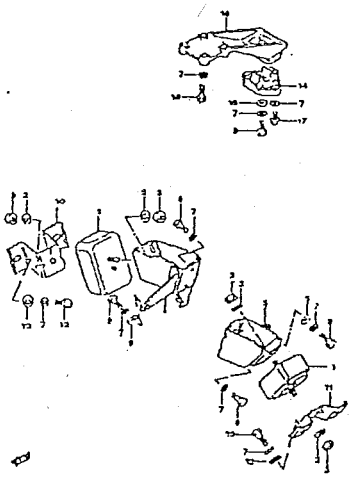

FIG.6 B-07

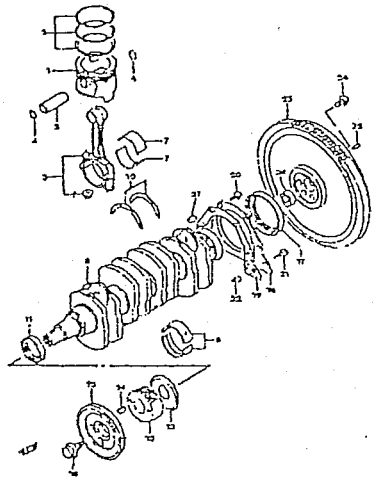

FIG.7 B-08

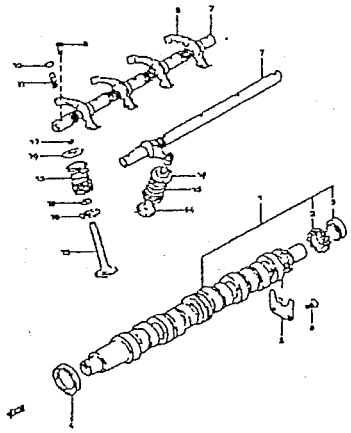

FIG.8 B-09

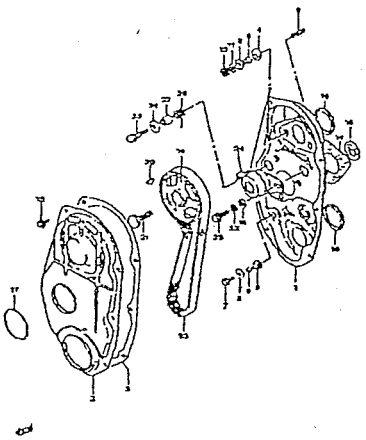

FIG.9 C-02

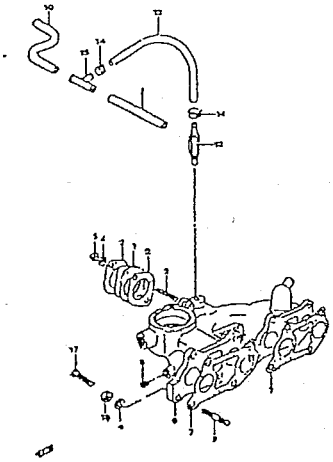

FIG.10 C-03

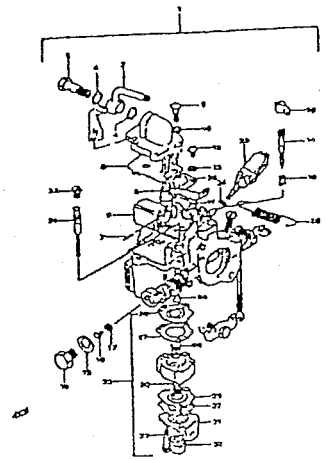

FIG.10.1 C-03.1

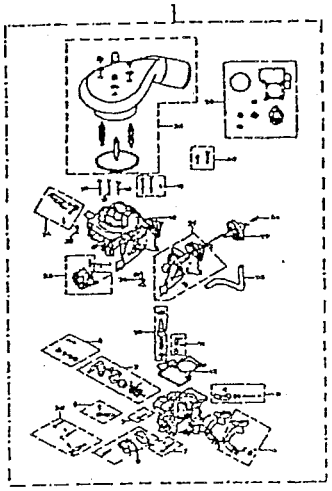

FIG.11 C-04

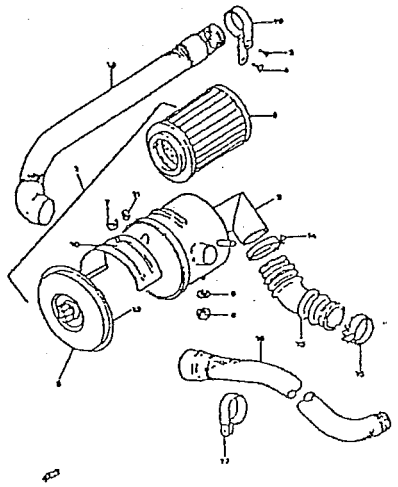

FIG.12 C-05

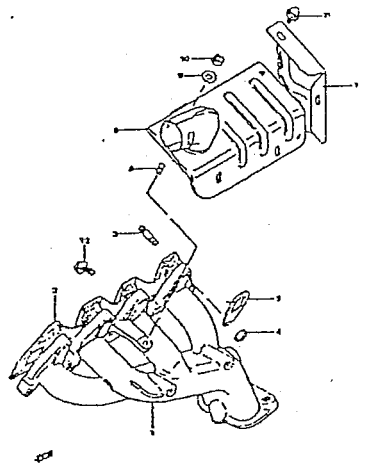

FIG.13 C-06

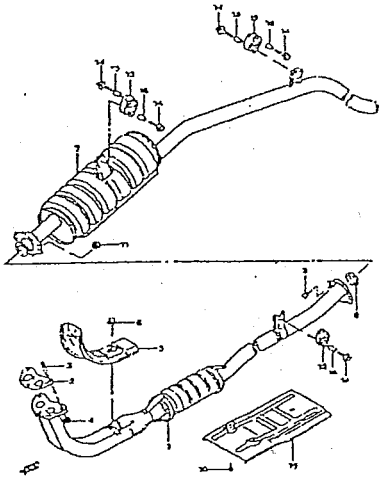

FIG.14 C-07

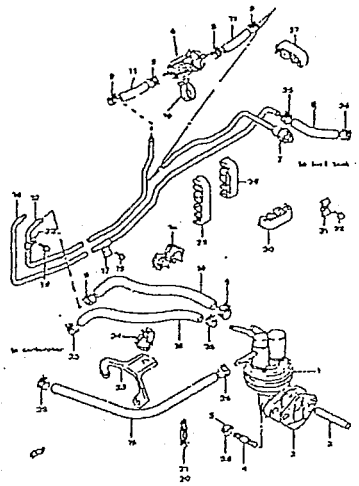

FIG.15 C-08

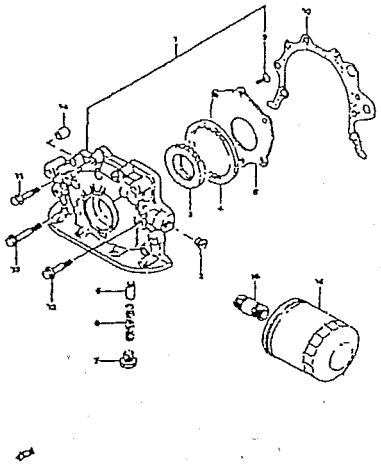

FIG.16 C-09

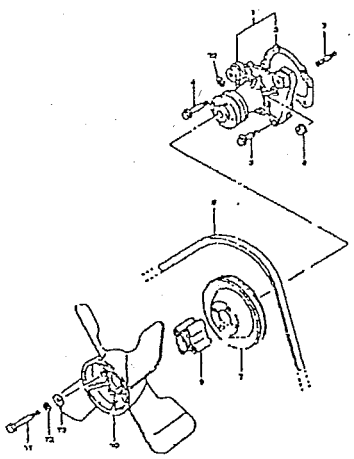

FIG.16.1 C-10

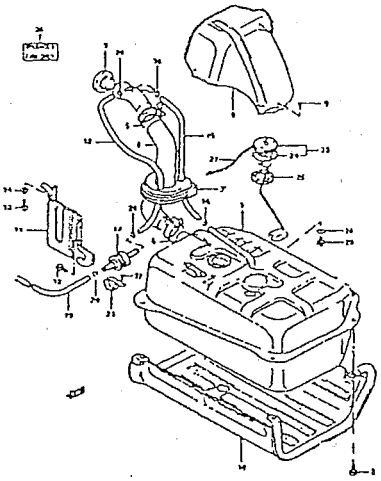

FIG.17 D-02

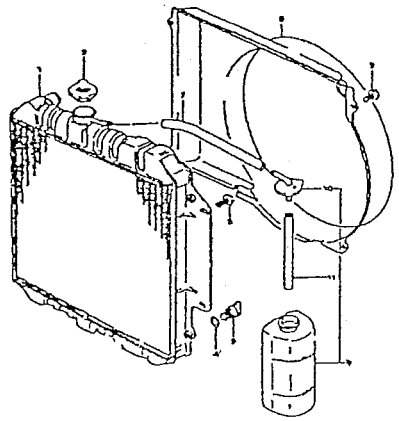

FIG.18 D-03

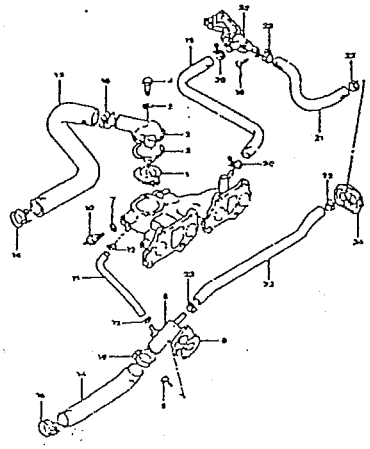

FIG.18.1 D-03.1

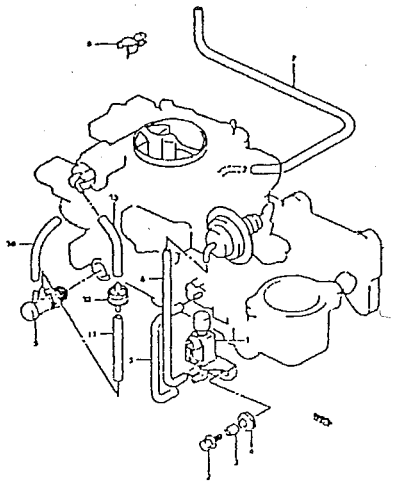

FIG.19 D-04

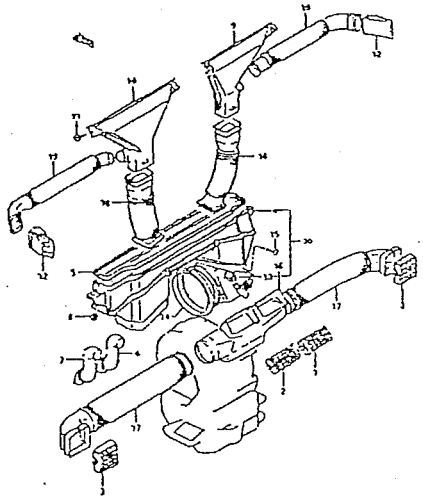

FIG.20 D-05

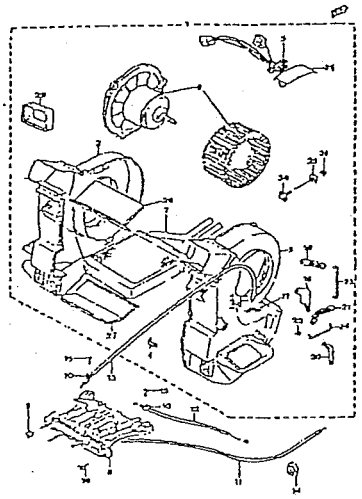

FIG.21 E-02

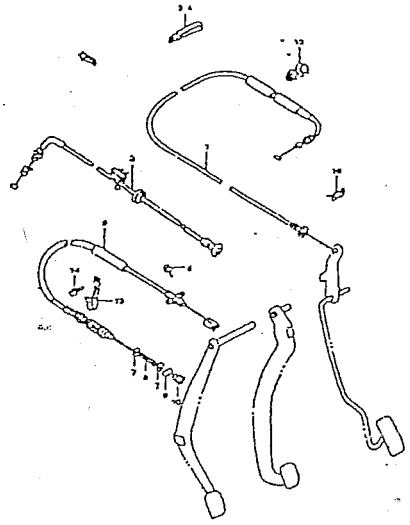

FIG.22 E-03

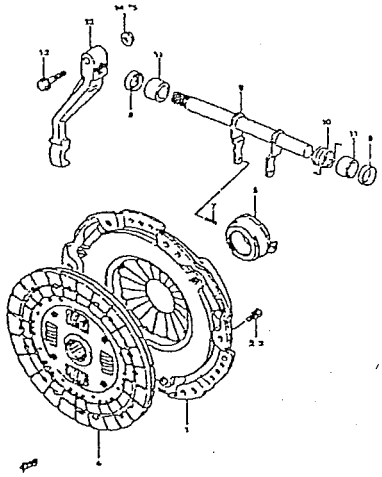

FIG.23 E-04

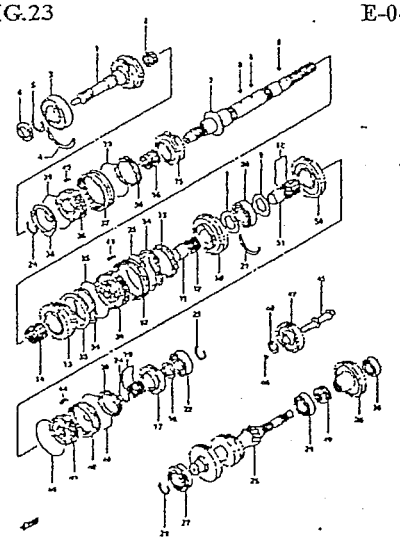

FIG.23.1 E-04.1

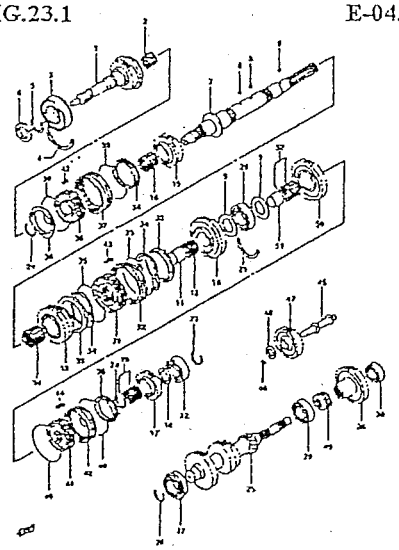

FIG.24 E-05

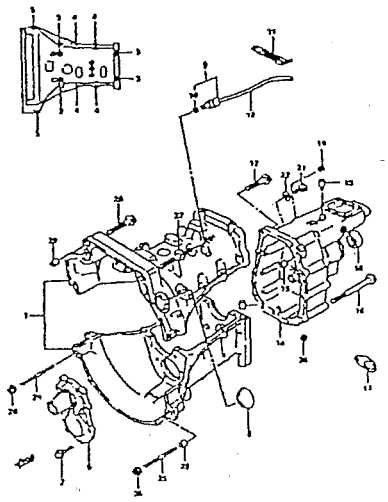

FIG.25 E-06

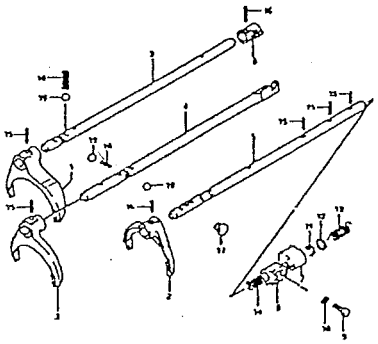

FIG.26 E-07

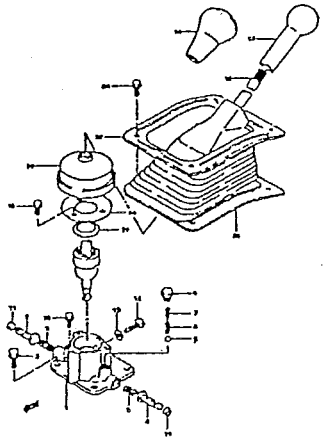

FIG.27 E-08

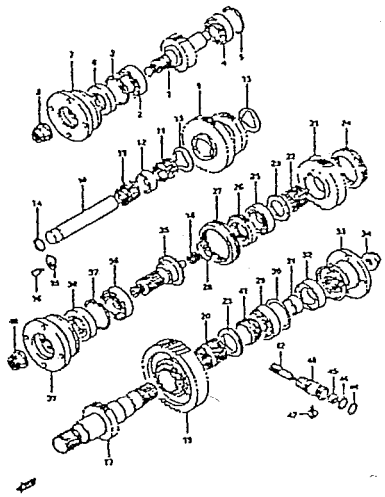

FIG.27.1 E-08.1

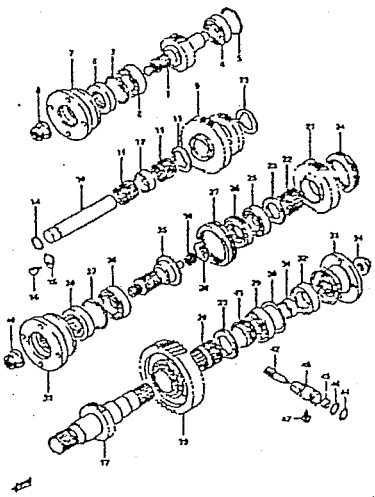

FIG.28 E-09

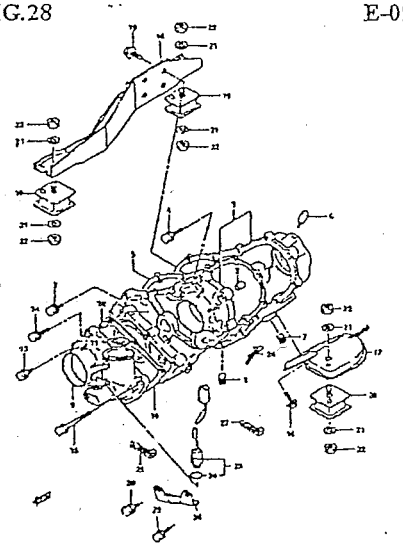

FIG.28.1 E-09.1

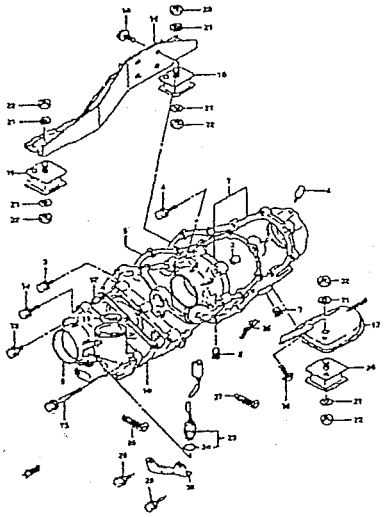

FIG.29 E-10

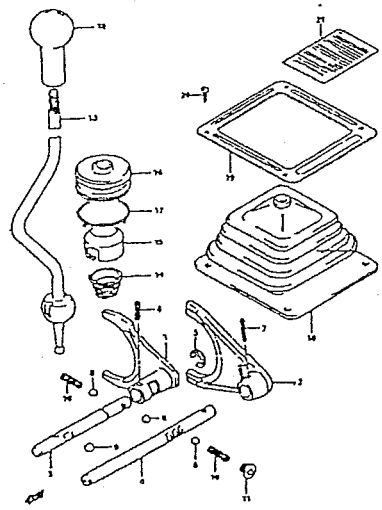

FIG.30 E-11

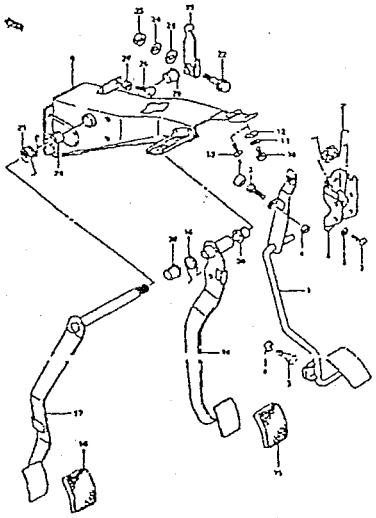

FIG.31 F-02

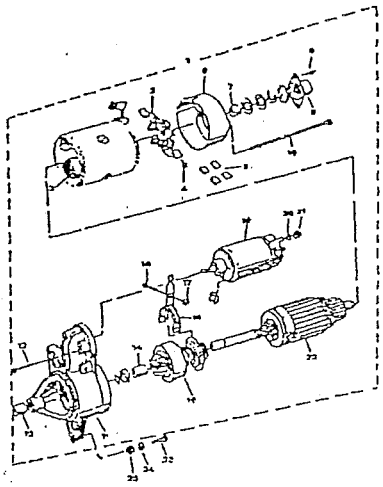

FIG.32 F-03

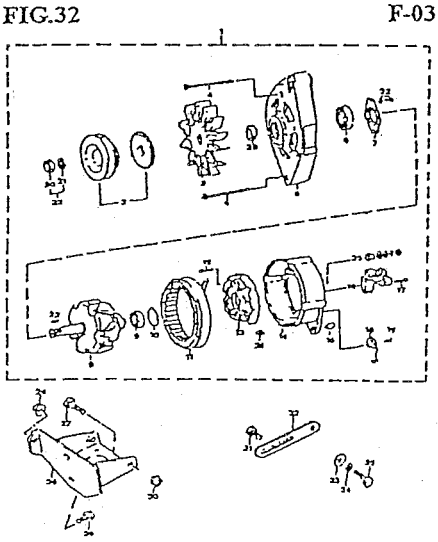

FIG.32.1 F-03.1

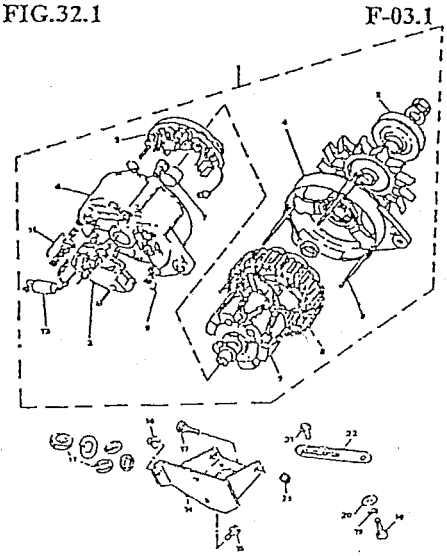

FIG.32.2 F.03.2

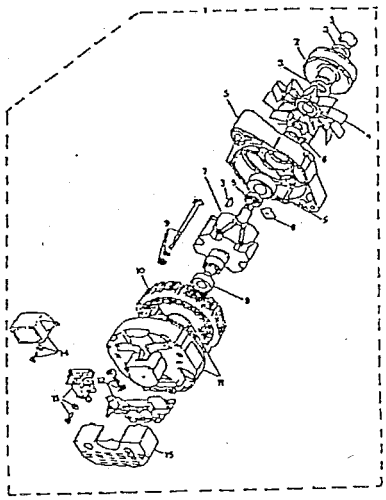

FIG.33 F-04

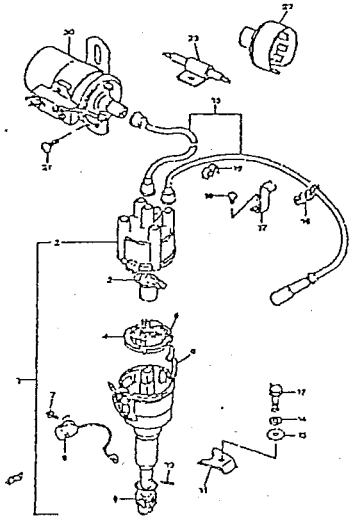

FIG.34 F-05

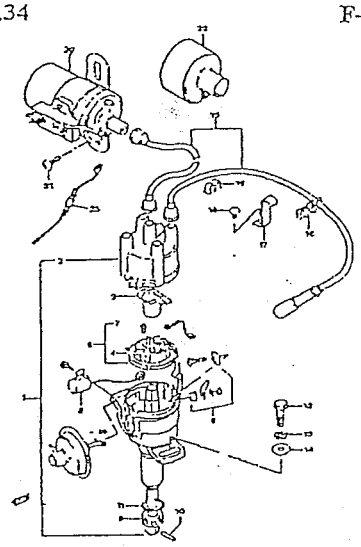

FIG.35 F-06

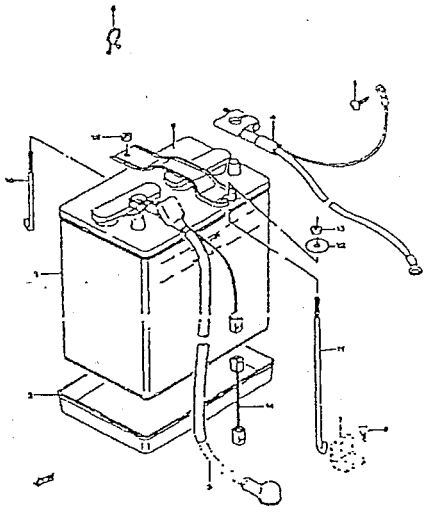

FIG.36 F-07

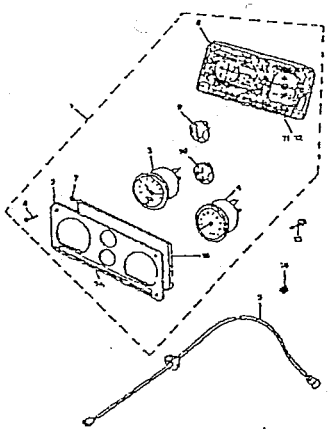

FIG.37 F-08

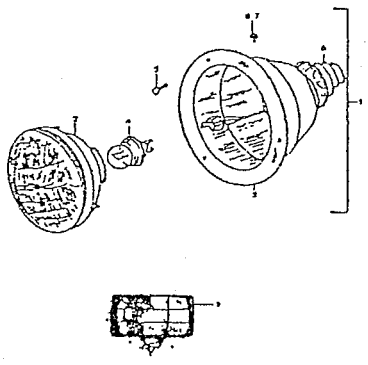

FIG.38 F-09

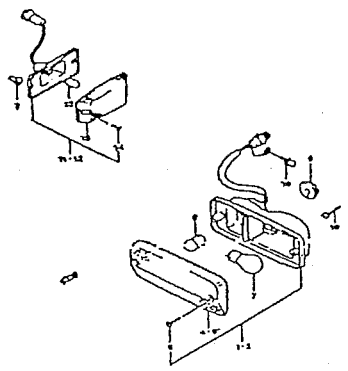

FIG.39 F-10

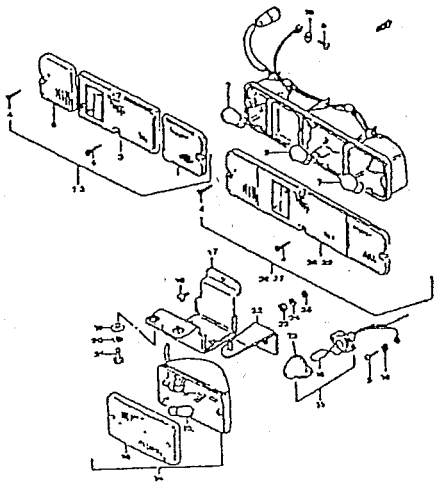

FIG.40 F-11

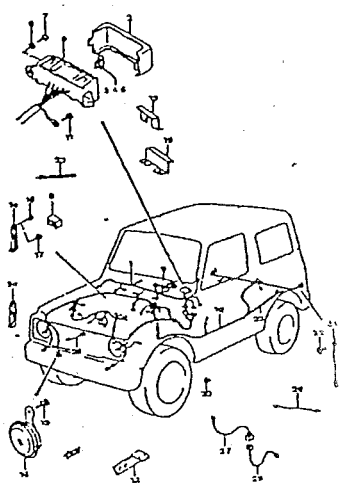

FIG.40.1 F-11.1

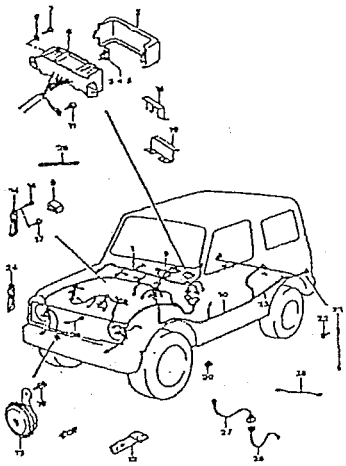

FIG.41 F-12

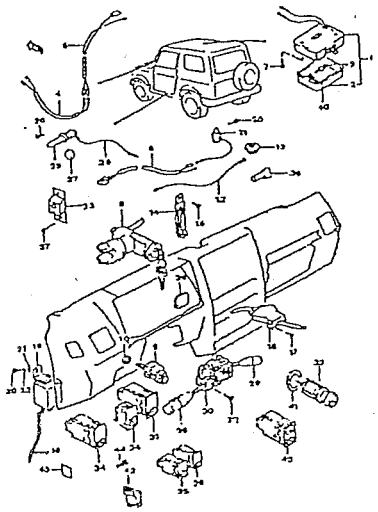

FIG.41.1 F-12.1

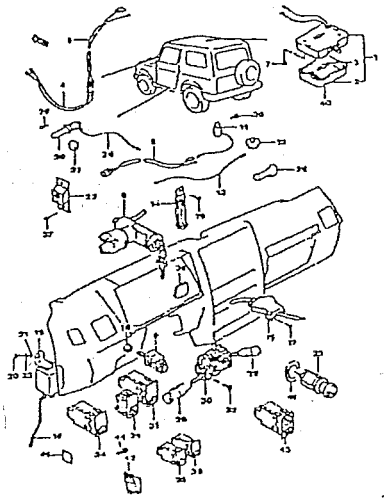

FIG.42 F-13

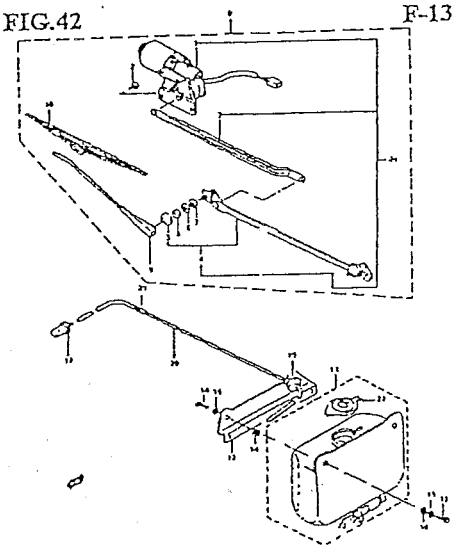

FIG.43 F-14

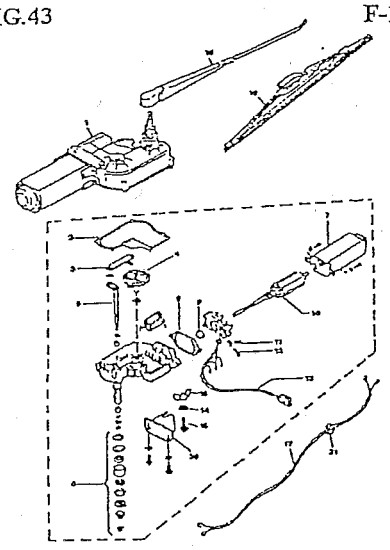

FIG.43.1 F-14.1

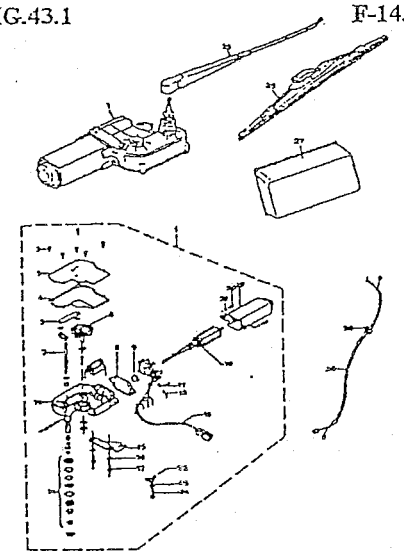

FIG.43.2 F-14.2

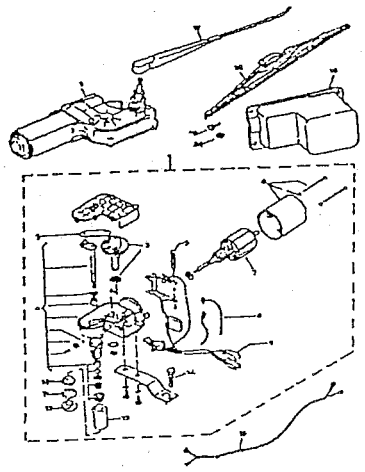

FIG.44 G-02

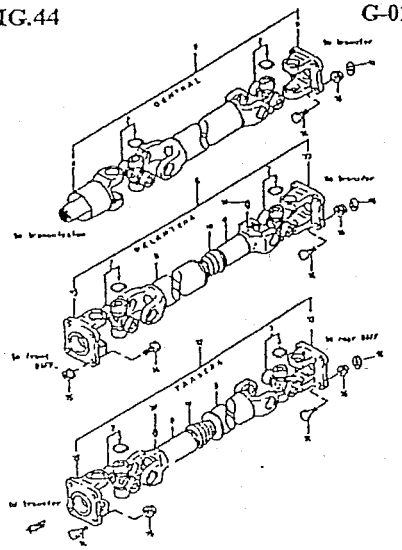

FIG.45 G-03

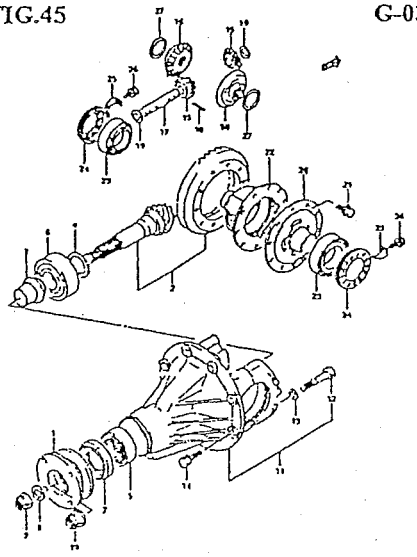

FIG.45.1 G-03.1

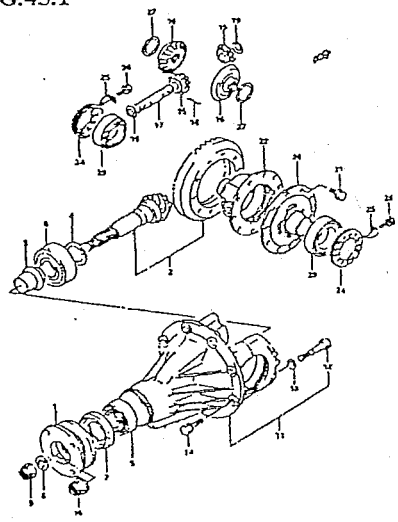

FIG.46 G-04

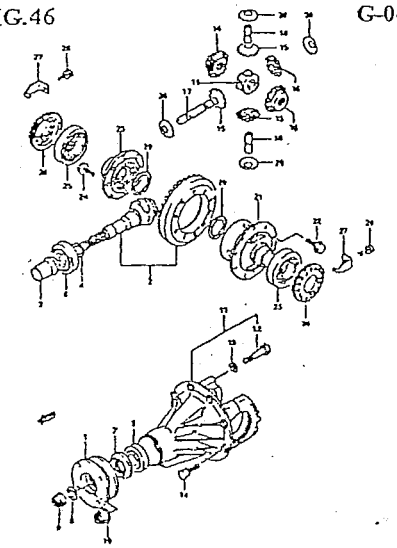

FIG.46.1 G-04.1

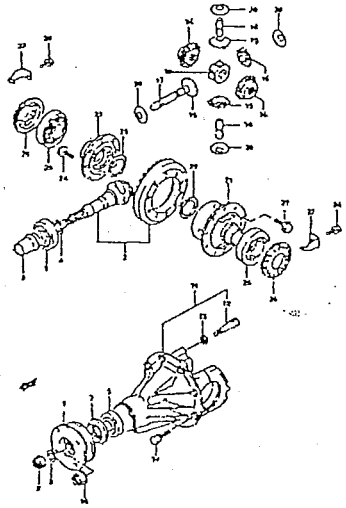

FIG.47 G-05

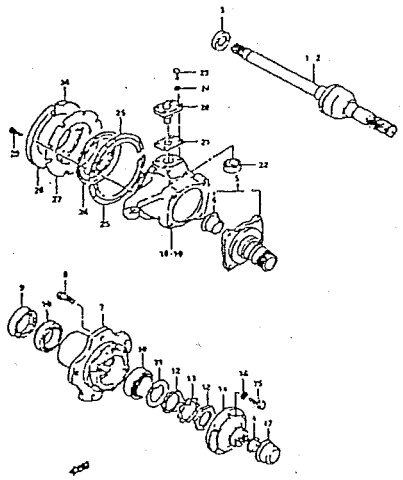

FIG.48 G-06

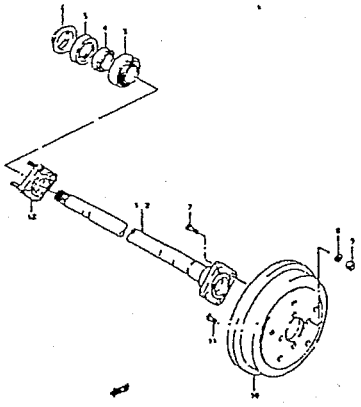

FIG.49 G-07

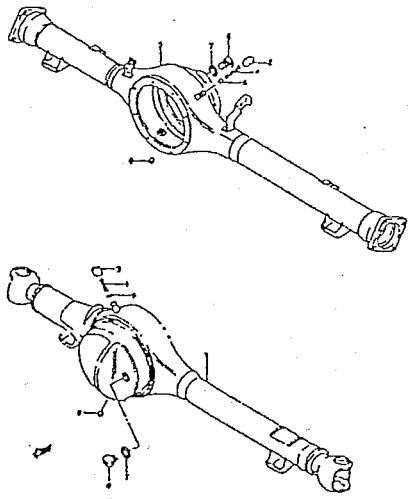

FIG.50 G-08

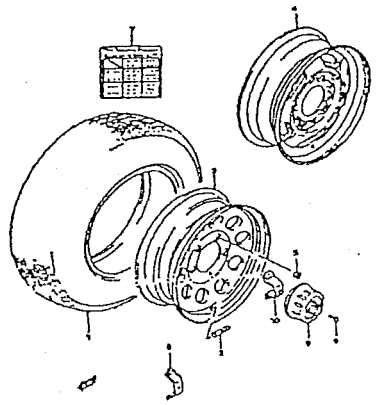

FIG.51 H-02

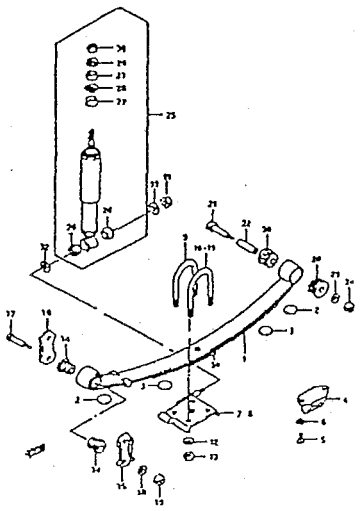

FIG.52 H-03

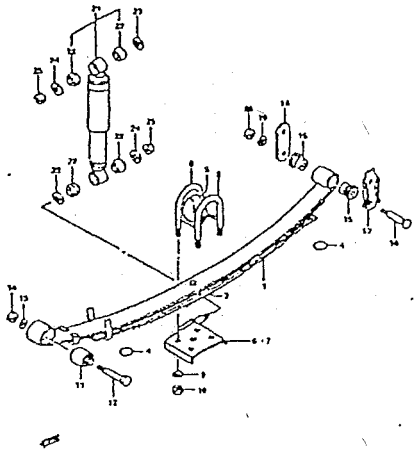

FIG.53 H-04

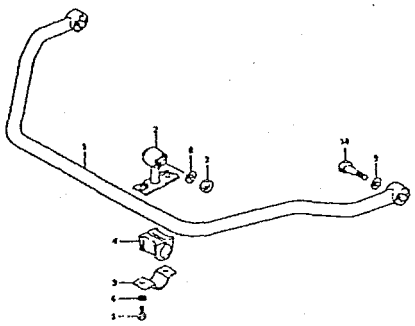

FIG.54 H-05

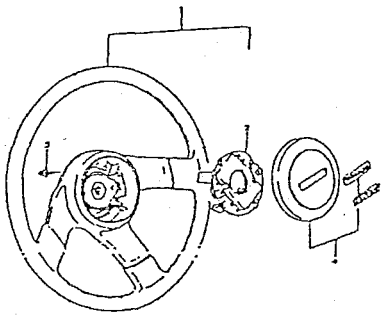

FIG.55 H-06

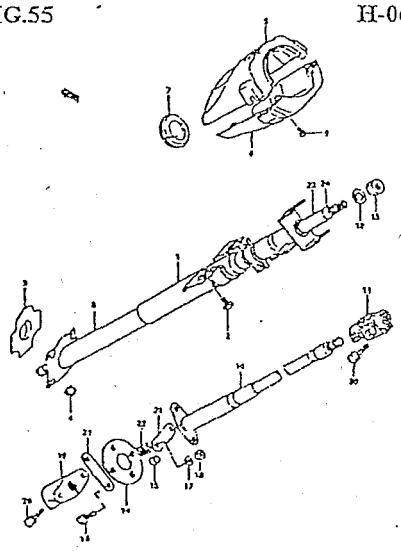

FIG.56 H-07

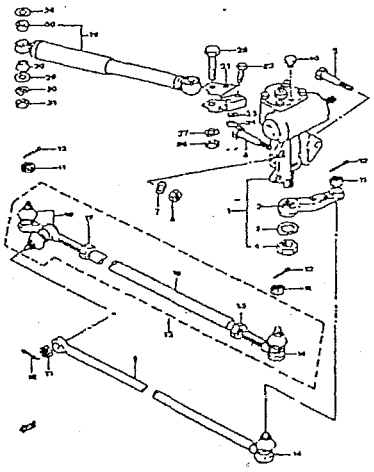

FIG.57 H-08

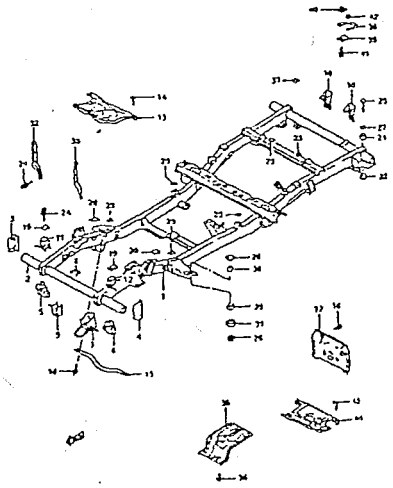

FIG.57.1 H-08.1

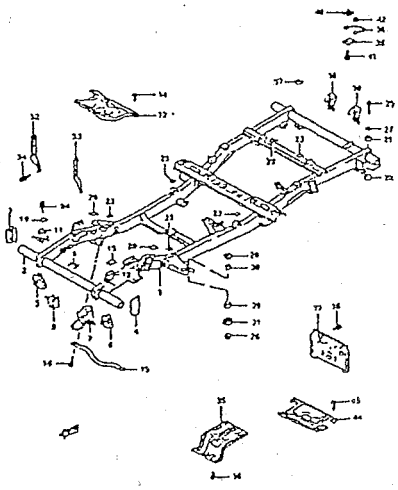

FIG.58 I-02

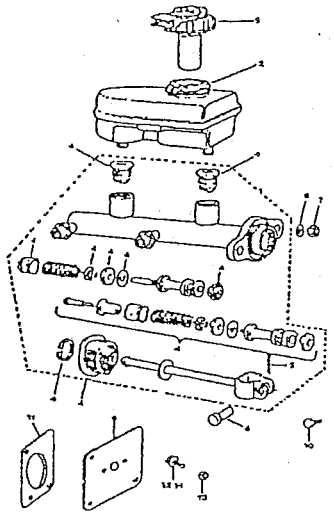

FIG.58.1 I-02.1

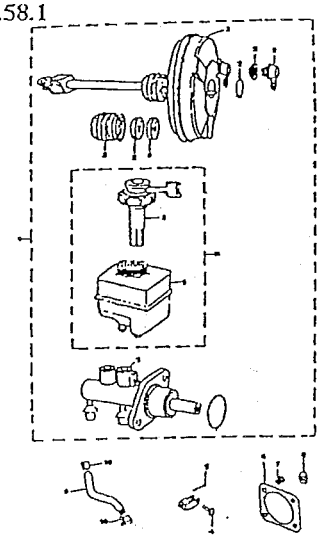

FIG.59 I-03

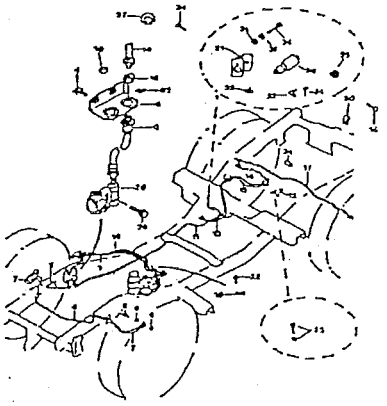

FIG.59.1 I-03.1

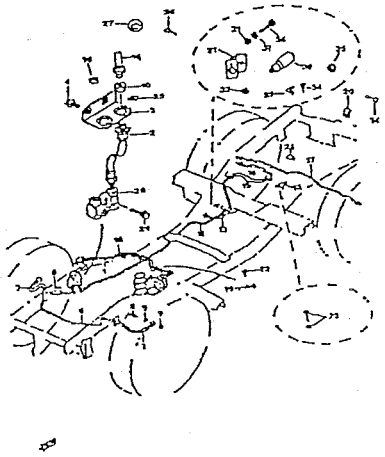

FIG.60 I-04

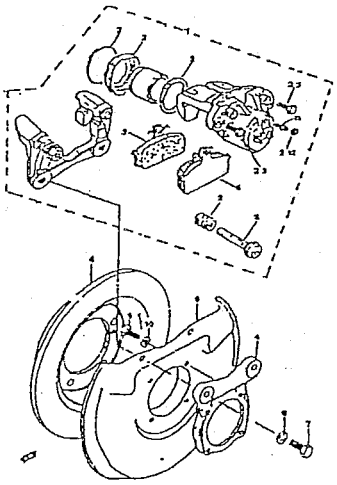

FIG.60.1 I-04.1

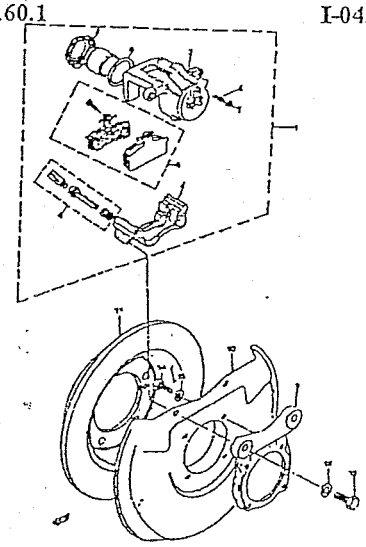

FIG.61 I-05

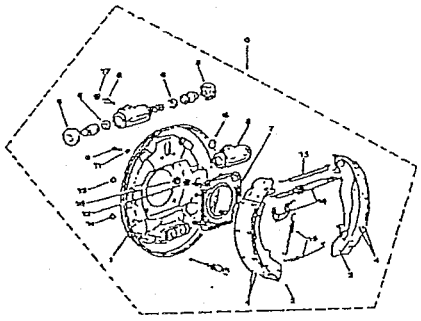

FIG.62 I-06

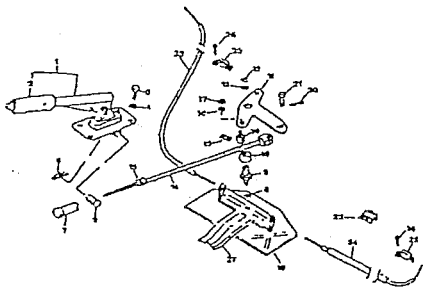

FIG.62.1 I-06.1

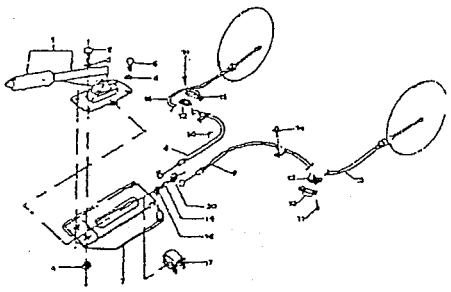

FIG.63 J-02

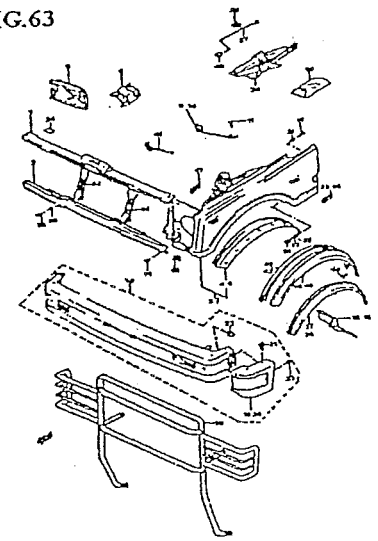

FIG.63.1 J-02.1

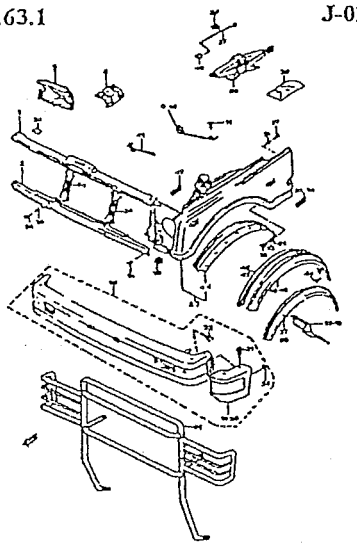

FIG.64 J-03

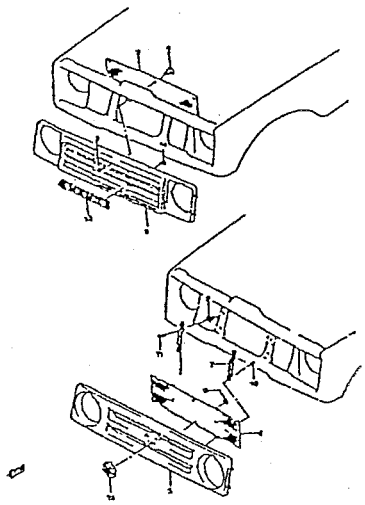

FIG.65 J-04

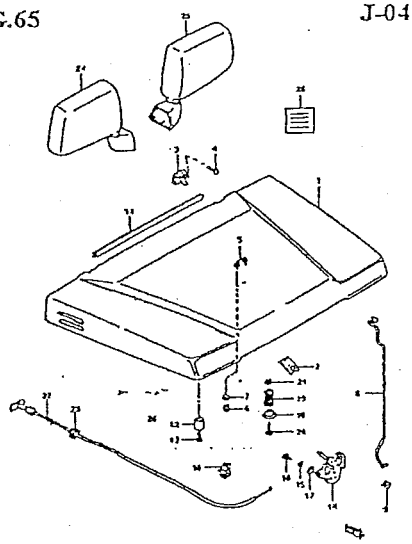

FIG.66 J-05

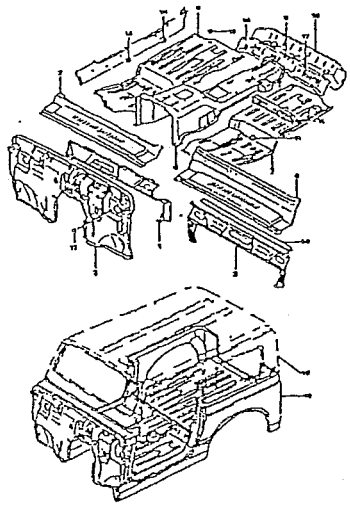

FIG.67 J-06

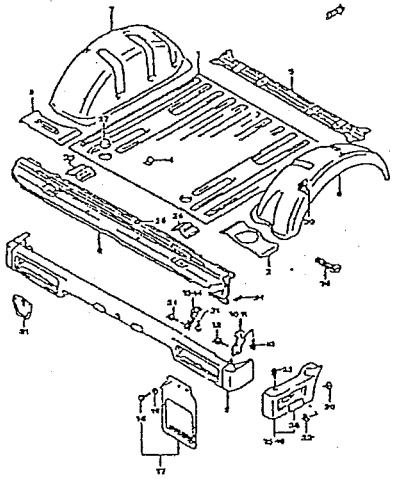

FIG.68 J-07

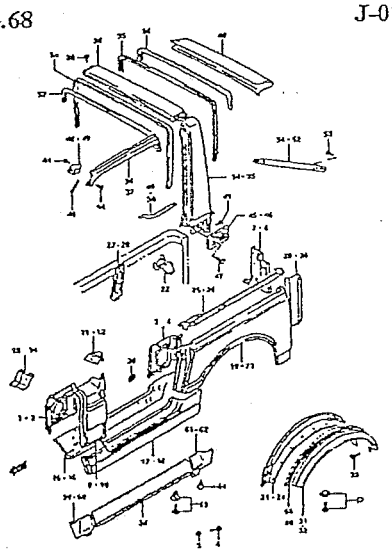

FIG.68.1 J-07.1

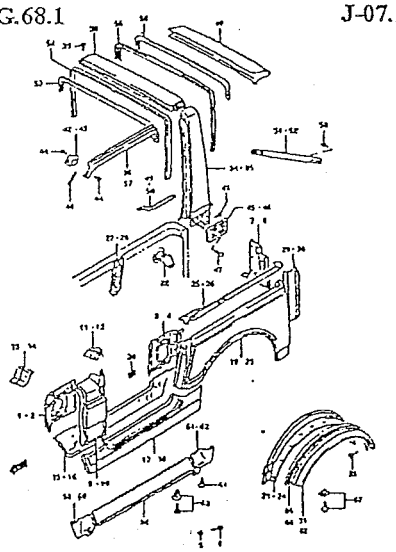

FIG.68.2 J-07.2

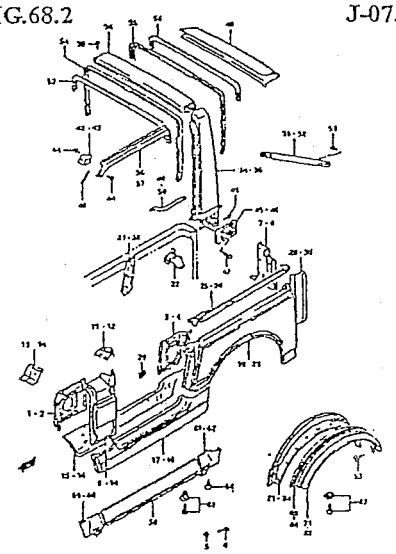

FIG.69 J-08

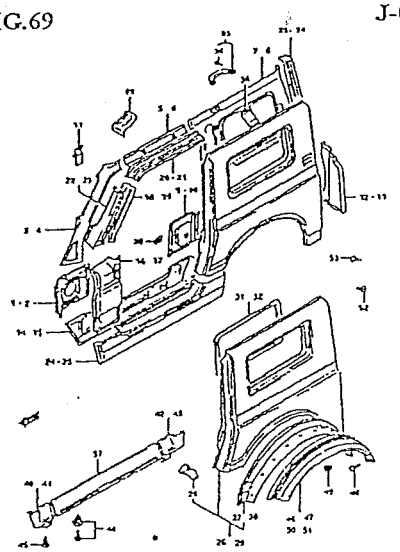

FIG.69.1 J-08.1

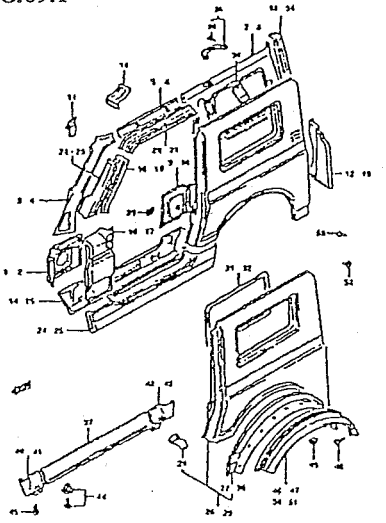

FIG.70 J-09

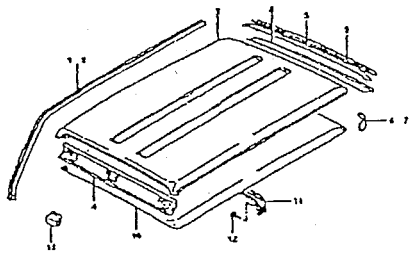

FIG.71 J-10

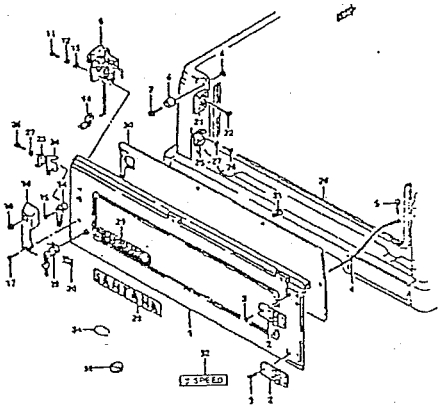

FIG.71.1 J-10.1

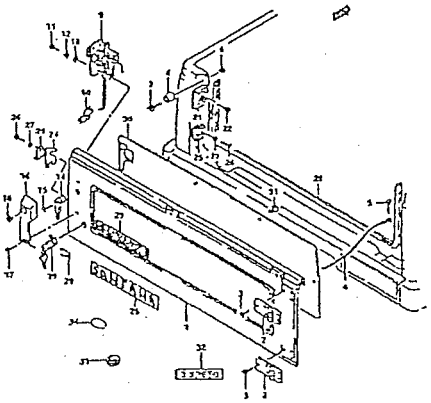

FIG.72 J-11

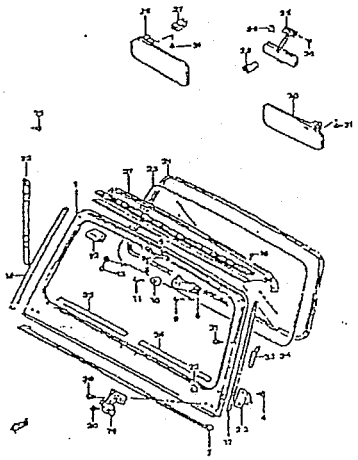

FIG.72.1 J-11.1

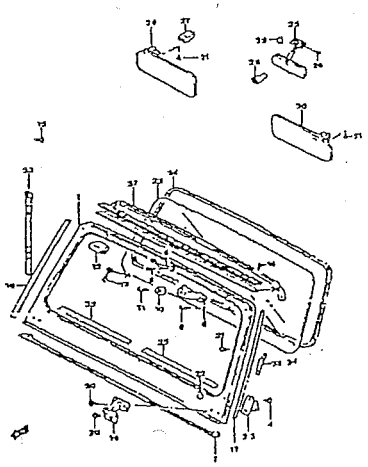

FIG.73 J-12

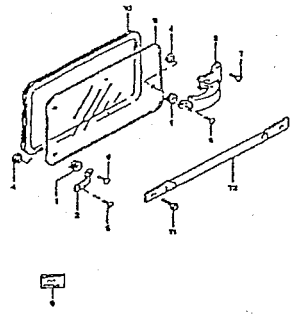

FIG.74 J-13

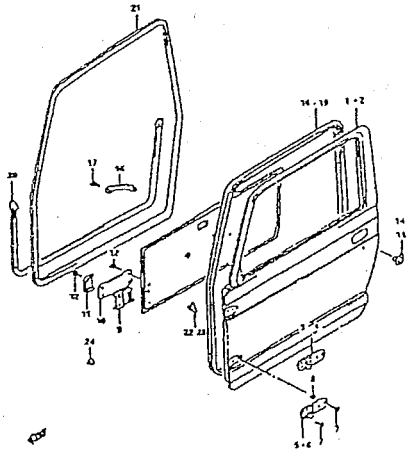

FIG.75 J-14

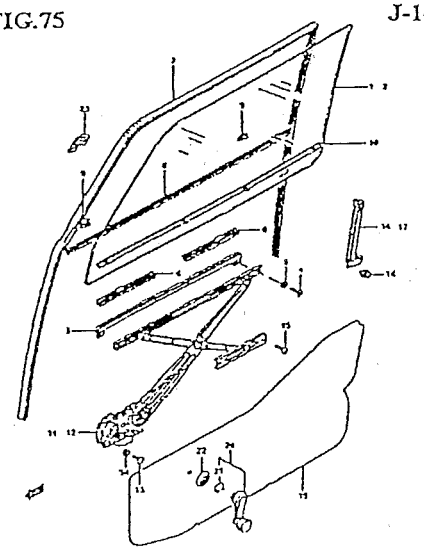

FIG.76 J-15

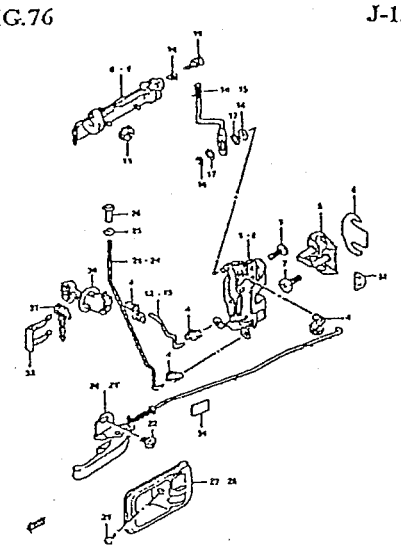

FIG.77 J-16

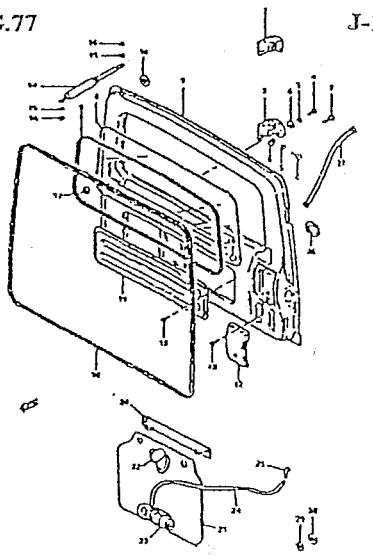

FIG.78 J-17

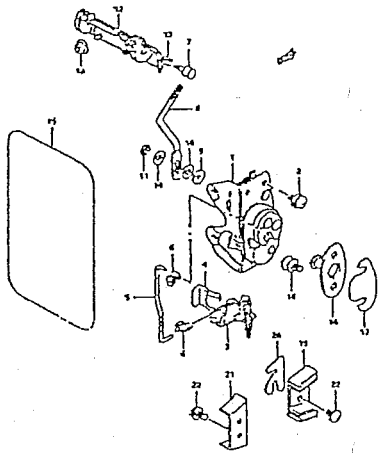

FIG.79 J-18

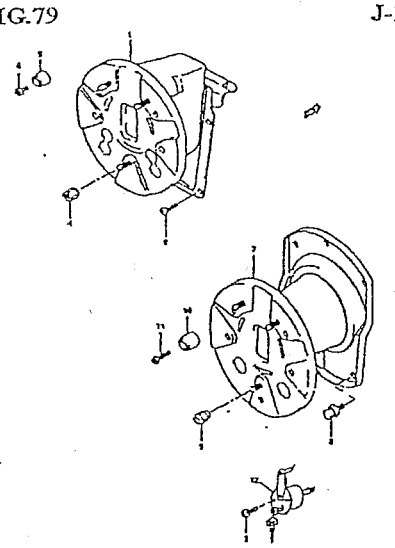

FIG.80 J-19

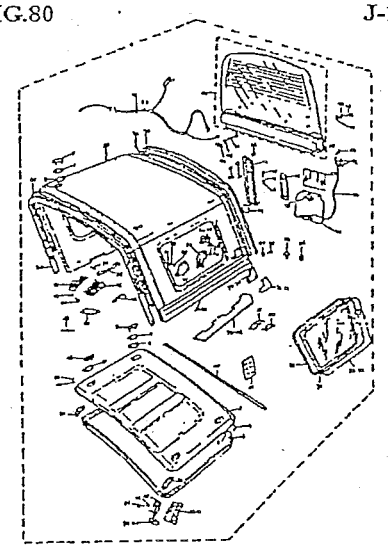

FIG.80.1 J-19.1

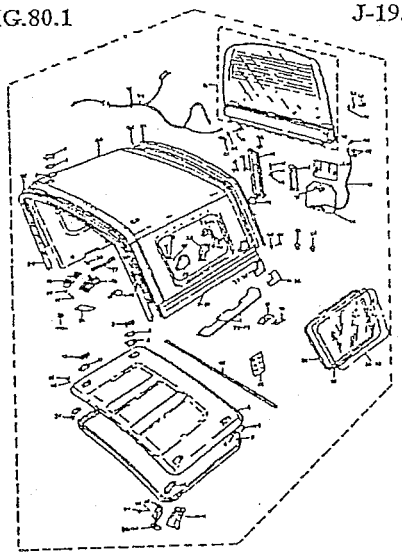

FIG.80.2 J-19.2

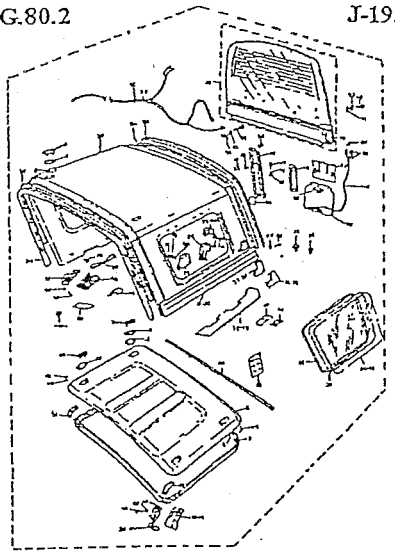

FIG.81 J-20

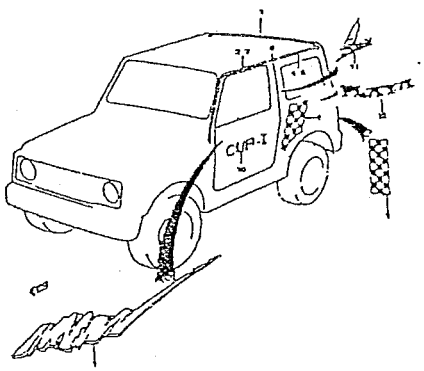

FIG.82 J-21

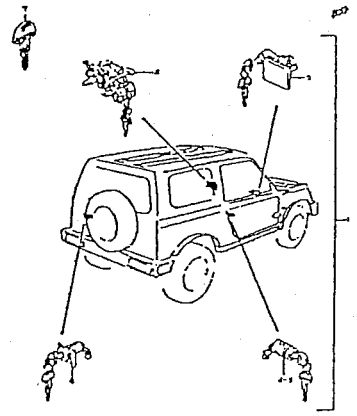

FIG.83 K-02

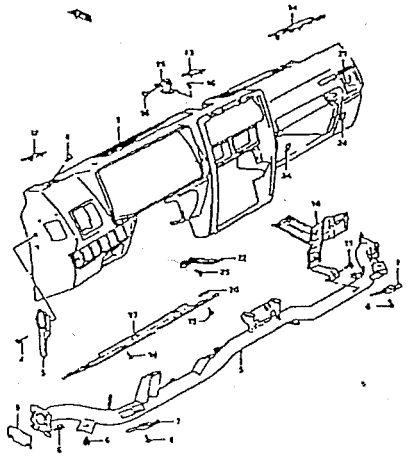

FIG.84 K-03

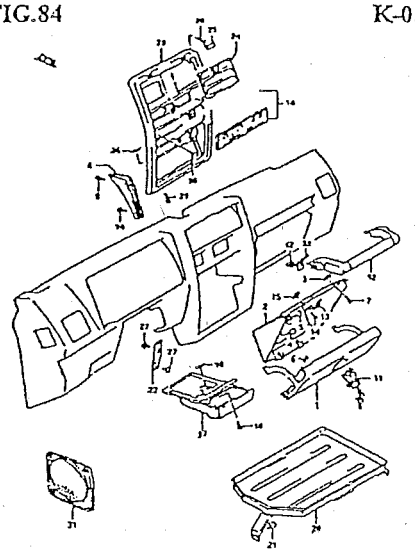

FIG.85 K-04

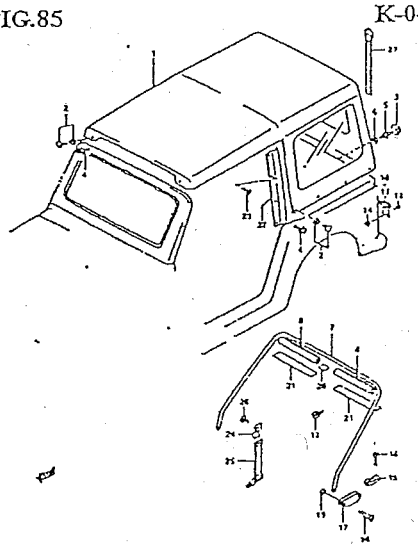

FIG.86 K-05

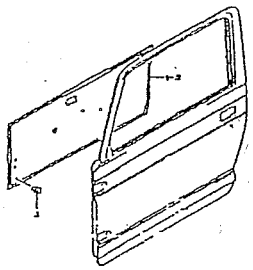

FIG.87 K-06

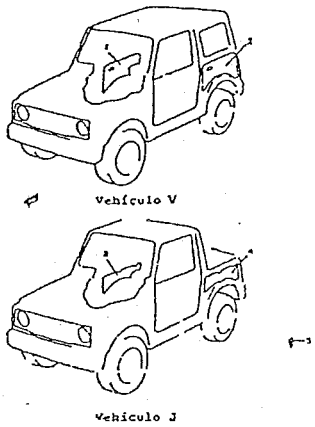

FIG.88 K-07

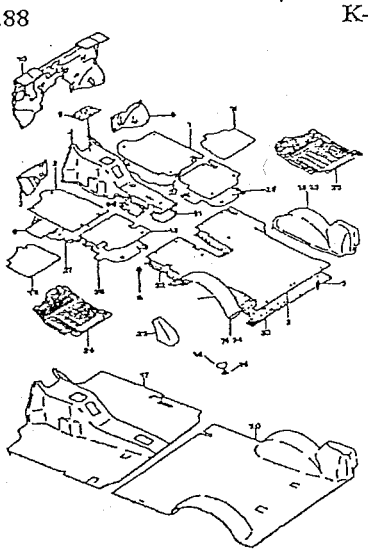

FIG.89 L-02

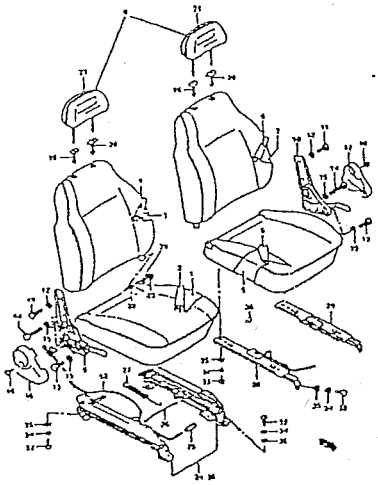

FIG.89.1 L-02.1

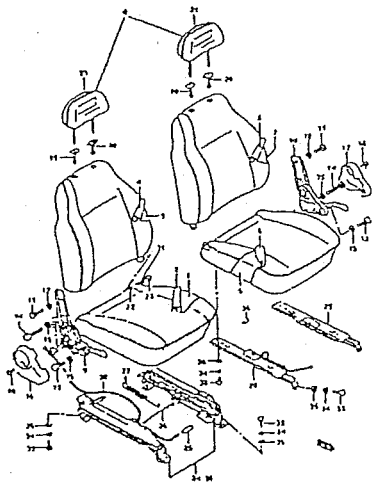

FIG.89.2 L-02.1

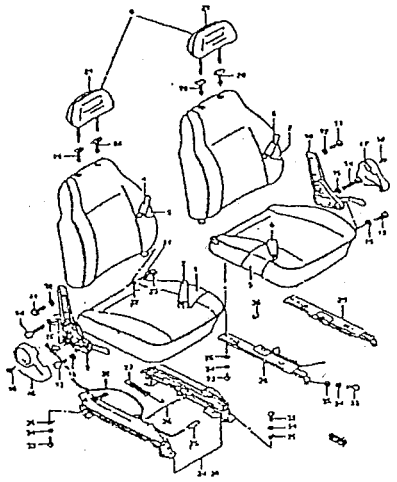

FIG.90 L-03

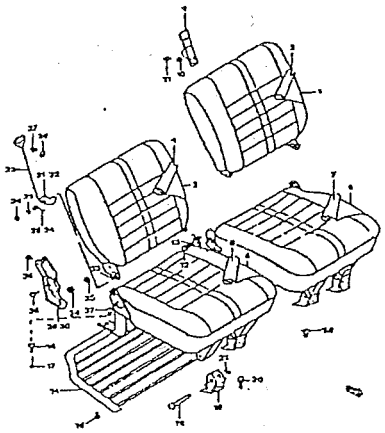

FIG.90.1 L-03.1

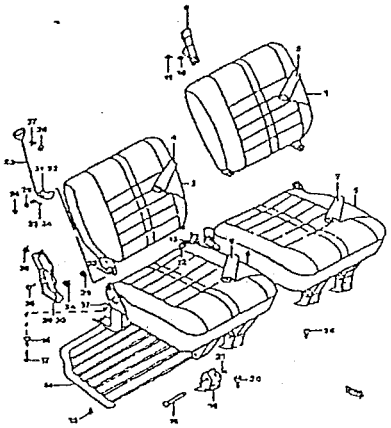

FIG.91 L-04

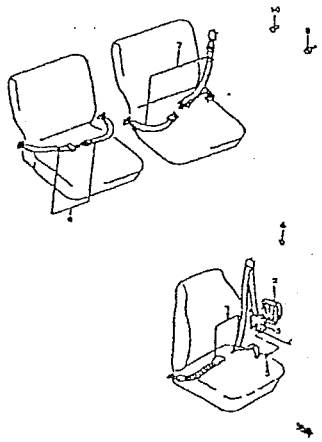

FIG.92 S-02

GRANDES CONJUNTOS
ASSEMBLY PARTS
GRANDS ENSEMBLES

CATALOGO DE RECAMBIOS.....PARTS CATALOGUE.....CATALOGUE DE PIECES DETACHEES

COMPOSICION*****COMPOSITION*****COMPOSICION

REFERENCIA PARTNUMBER NUM.PIECE	DENOMINACION	DESCRIPTION	DENOMINATION	GRUPO GROUP GROUP
280001	MOTOR	ENGINE	MOTEUR	01
280002	SISTEMA ALIMENTACIO	FEEDING SYSTEM	SYSTEME ALIMENTATIO	02
280003	REFRIGERACION	COOLING	REFROIDISSEMENT	03
280004	EMBRAGUE	CLUTCH	EMBRAYAGE	04
280005	SISTEMA ELECTRICO	ELECTRIC SYSTEM	SYSTEME ELECTRIQUE	05
280006	TRANSMISION Y EJES	TRANSMISSION & SHAF	TRANSMISSION ET AXE	06
280007	DIRECCION	STEERING	DIRECTION	07
280008	FRENO	BRAKE	FREIN	08
280009	CARROCERIA	BODY	CARROSSERIE	09
280010	TAPICERIA	TRIM	GARNITURE	10
280011	ASIENTOS	SEATS	SIEGES	11
280012	GRANDES CONJUNTOS	ASSEMBLY PARTS	GRANDS ENSEMBLES	12

GRUPO 01 MOTOR

GROUP 01 ENGINE

GROUP 01 MOTEUR

COMPOSICION.....COMPOSITION.....COMPOSICION

REFERENCIA PARTNUMBER NUM.PIECE	DENOMINACION	DESCRIPTION	DENOMINATION
401001	B-02J/JUNTA MOTOR	B-02ENG.GASKET SET	B-02JEU JOINT MOTEUR
401002	B-03CULATA	B-03CYLINDER HEAD	B-03CULASSE
401003	B-04BLOQUE CINLINDRO	B-04CYLINDER BLOCK	B-04BLOC CYLINDRE
401004	B-05CARTER ACEITE	B-05OIL PAN	B-05CARTER D'HUILE
401005	B-06SOPORTE MOTOR	B-06ENGINE BRACKET	B-06SUPPORT MOTEUR
401006	B-07CIGUENAL	B-07CLUTCH	B-07VILEBREQUIN
401007	B-08ARBOL DE LEVAS	B-08CAMSHAFT	B-08ARBRE A CAMES
401008	B-09DISTRIBUCION	B-09TIMING	B-09DISTRIBUTION

B-02

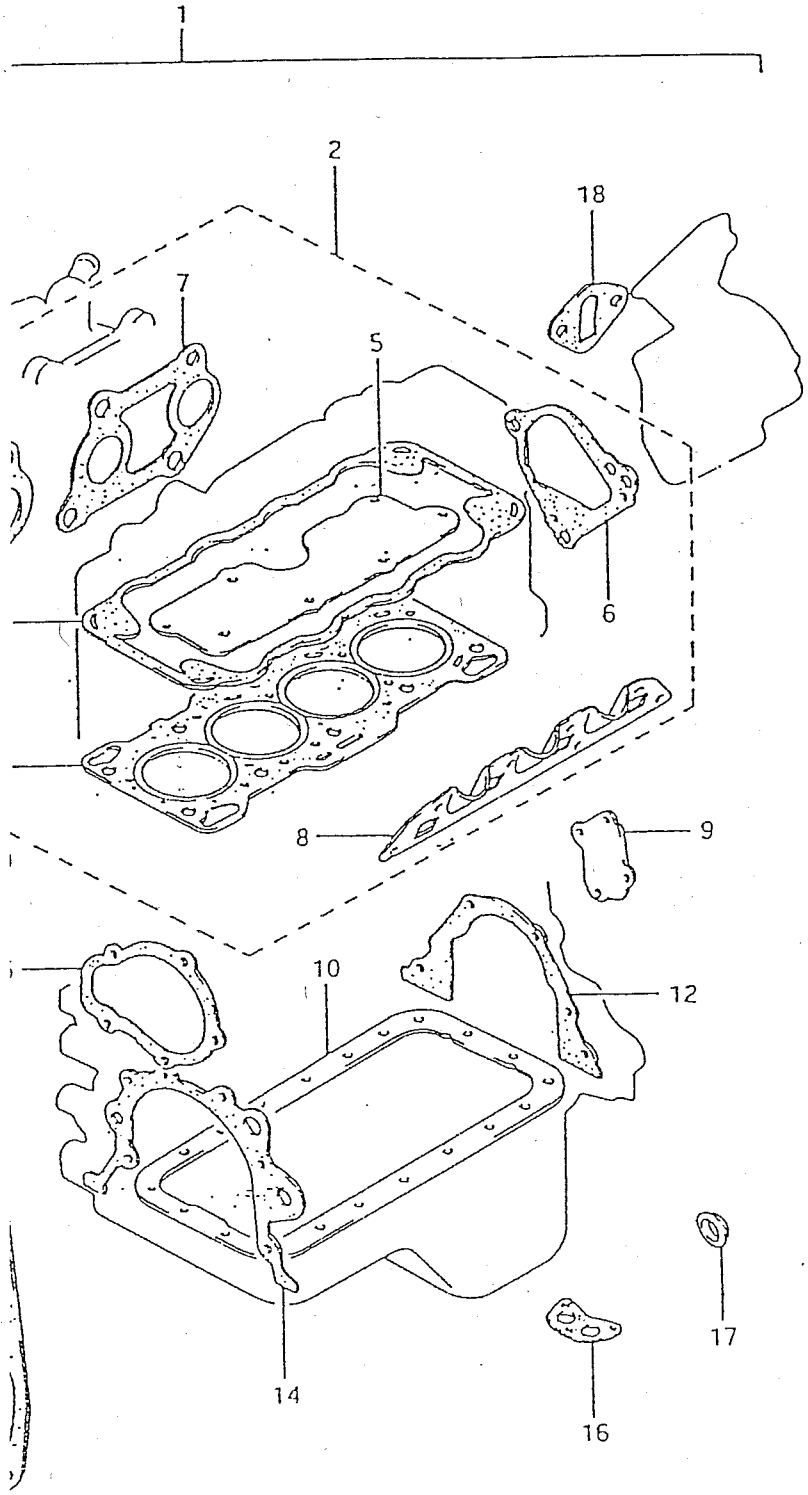

PUBLICACION N:A01116 GRUPO=MOTOR SUBGRUPO=B-02J/JUNTA MOTOR
EDICION N: 1 GROUP=ENGINE SUBGROUP=B-02ENG.GASKET SET
GROUPE=MOTEUR SUBGROUPE=B-02JEU JOINT MOTEUR

N.FIG PLATE N.FIG	N.PIEZA PARTNUMBER N.PIECE	CAN QTY OUT	DENOMINACION	DESCRIPTION	DENOMINATION	OBSERVACIONES
1	11400-80814	1	JUEGO JUNTAS MOTOR	ENGINE GASKETS SET	JEU JOINTS MOTEUR	
2	11100-80811	1	JUEGO JUNTAS CULATA	CYL.HEAD GASKETS SET	JEU JOINTS CULASSE	
3	11141B75102	1	JUNTA CULATA	CYLINDER HEAD GASKET	JOINT CULASSE	ALTERN.
	11141C75102	1	JUNTA CULATA	CYLINDER HEAD GASKET	JOINT CULASSE	
4	11189-73001	1	JUNTA TAPA BALANCIN.	ROCKER ARM COVER	JOINT COUV.CULBUTEUR	T1,T2
	11189-73002	1	JUNTA TAPA BALANCIN.	ROCKER ARM COVER	JOINT COUV.CULBUTEUR	T3
5	11173A73001	1	JUNTA PLACA	PLATE GASKET	JOINT PLAQUE	
6	11169B73002	1	JUNTA DISTRIBUIDOR	DISTRIBUTOR GASKET	JOINT DISTRIBUTEUR	
7	13119B73001	2	JUNTA COL.ADM.	INLET MANIF.GASKET	JOINT COLL.ADM.	
8	14140A73000	1	JUNTA COL.ESCAPE	EXHAUST MANIF.GASKET	JOINT COLL.ECHAPP.	
9	11229A73000	1	JUNTA PLACA BLOQUE	BLOCK PLATE GASKET	JOINT PLAQUE BLOC	
10	17559-84C00	1	JUNTA TUBO AGUA	WATER HOSE GASKET	JOINT TUYAU EAU	T3
	17559A73000	1	JUNTA TUBO AGUA	WATER HOSE GASKET	JOINT TUYAU EAU	T1,T2
11	11399A73010	1	JUNTA CARTER ACEITE	OIL PAN GASKET	JOINT CARTER HUILE	
12	11349B73002	1	JUNTA ALOJAM.RETEN	RETAINER HOUS.GASKET	JOINT LOG.ARRETOIR	
13	13125-80000	2	JUNTA CARBURADOR	CARBURETTER GASKET	JOINT CARBURATEUR	W/ ABESTOS
	13125A80000	2	JUNTA CARBURADOR	CARBURETTER GASKET	JOINT CARBURATEUR	NO ABESTOS
14	16119-73001	1	JUNTA BOMBA ACEITE	OIL PUMP GASKET	JOINT POMPE HUILE	
15	17431A73001	1	JUNTA BOMBA AGUA	WATER PUMP GASKET	JOINT POMPE EAU	
16	14181C80000	1	JUNTA TUBO ESCAPE	EXHAUST HOSE GASKET	JOINT TUYAU ECHAPP.	
17	14699-73001	1	JUNTA SILENCIOSO	SILENCER GASKET	JOINT SILENCIEUX	
18	15319C63800	1	JUNTA BOMBA COMB.	FUEL PUMP GASKET	JOINT POMPE CARB.	
19	17569A80000	1	JUNTA TERMOSTATO	THERMOSTAT GASKET	JOINT THERMOSTAT	

FIG.2

B-03

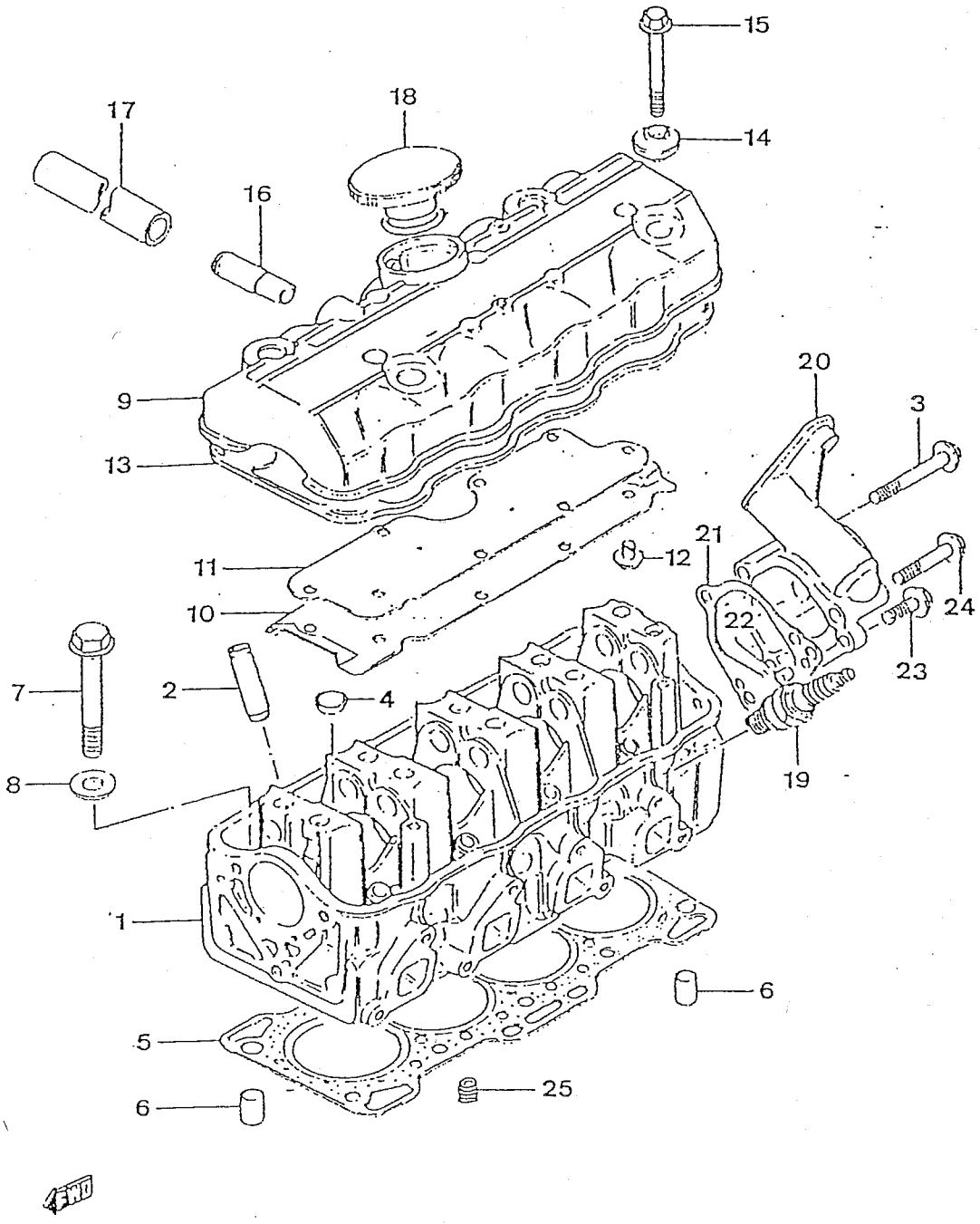

PUBLICACION N:A01116 GRUPO=MOTOR SUBGRUPO=B-03CULATA
EDICION N: 1 GROUP=ENGINE SUBGROUP=B-03CYLINDER HEAD
GROUPE=MOTEUR SUBGROUPE=B-03CULASSE

N.FIG PLATE N.FIG	N.PIEZA PARTNUMBER N.PIECE	CAN QTY OUT	DENOMINACION	DESCRIPTION	DENOMINATION	OBSERVACIONES
1	11110-80002	1	CULATA	CYLINDER HEAD	CULASSE	
2	11115-82000	4	GUIA VALVULA	VALVE GUIDE	GUIDE SOUPAPE	
3	09103-08155	1	TORNILLO	SCREW	VIS	
4	09241-20002	5	TAPON TIPO COPA	CUP TYPE PLUG	BOUCHON TYPE COUPE	T1
	09241-20006	5	TAPON TIPO COPA	CUP TYPE PLUG	BOUCHON TYPE COUPE	T2,T3
5	11141B75102	1	JUNTA CULATA	CYL.HEAD GASKET	JOINT CULASSE	ALTERN.
	11141C75102	1	JUNTA CULATA	CYL.HEAD GASKET	JOINT CULASSE	
6	09206-13001	2	FIJA	PIN	GOUJON	
7	09103-10018	10	TORNILLO	SCREW	VIS	
8	09160-10072	10	ARANDELA PLANA	FLAT WASHER	RONDELLE PLATE	
9	11171A73000	1	TAPA BALANCINES	ROCKER ARMS COVER	COUVERCLE CULBUTEURS	
	11171B73000	1	TAPA BALANCINES	ROCKER ARMS COVER	COUVERCLE CULBUTEURS	EO4
10	11172-73001	1	PLACA DEFLECTORA	DEFLECTOR PLATE	PLAQUE DEFLECTRICE	
11	11173A73001	1	JUNTA PLACA DEFLECT.	DEFLECT.PLATE GASKET	JOINT PLAQUE DEFLECT	
12	01514-06103	5	TORNILLO	SCREW	VIS	
13	11189-73001	1	JUNTA TAPA BALANCIN.	ROCK.ARM COV.GASKET	JOINT COUV.CULBUTEUR	T1
	11189-73002	1	JUNTA TAPA BALANCIN.	ROCK.ARM COV.GASKET	JOINT COUV.CULBUTEUR	T2,T3
14	11180-78101	4	GOMA TAPA BALANCINES	ROCK.ARM COV.RUBBER	CAOUTCH.COUV.CULBUT.	
15	01514-06603	4	TORNILLO	SCREW	VIS	T1
	09103-06134	4	TORNILLO	SCREW	VIS	T2,T3
16	11174-73000	1	TUBO RESPIRADERO	BREATHER HOSE	TUYAU RESPIRATEUR	
17	11191A78100	1	MANGUITO RESPIRADERO	BREATHER HOSE	MANCHON RESPIRATEUR	
18	16920-80001	1	TAPON LLENADO	FILLER PLUG	BOUCHON REMPLISSAGE	
19	09482-00155	4	BUJIA NGK BPR5 ES	SP.PLUG NGK BPR5 ES	BOUGIE NGK BPR5 ES	
	09482-00167	4	BUJIA ND W16 EXR-U	SP.PLUG ND W16 EXR-U	BOUGIE ND W16 EXR-U	
	09482A00155	4	BUJIA CHAMPION N9YC	SP.PLUG CHAMPI. N9YC	BOUGIE CHAMPION N9YC	
20	11161A80000	1	CARTER ACOPLAMIENTO	DISTRIBUTOR HOUSING	CARTER DISTRIBUTEUR	
21	11169B73002	1	JUNTA DISTRIBUIDOR	DISTRIBUTOR GASKET	JOINT DISTRIBUTEUR	
22	04221-06129	2	FIJA	PIN	GOUPILLE	
23	01514-08256	1	TORNILLO	SCREW	VIS	
24	09103-08154	1	TORNILLO	SCREW	VIS	
25	11112-73001	1	TAPON ACEITE	OIL PLUG	BOUCHON HUILE	

FIG.3

B-04

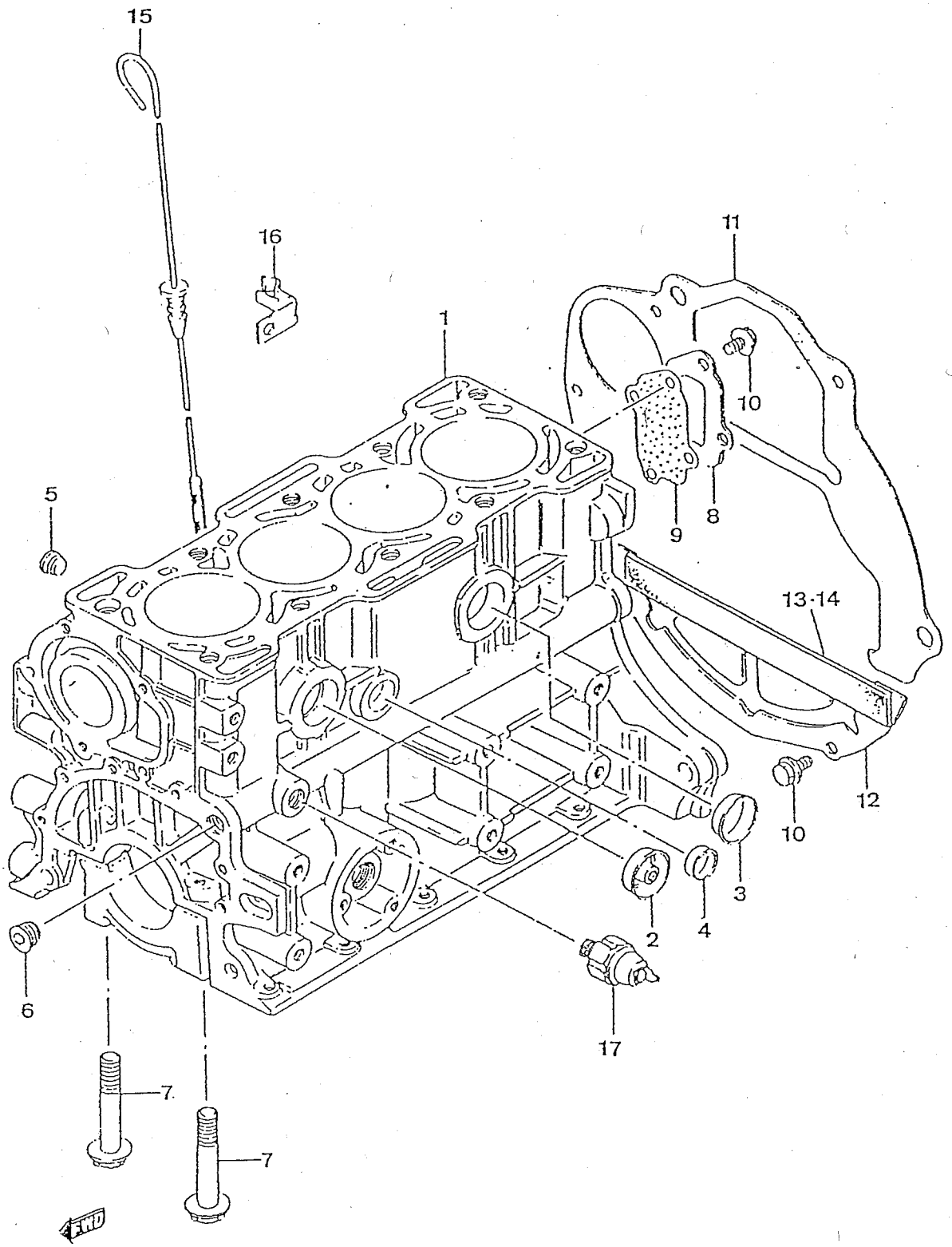

PUBLICACION N:A01116 GRUPO=MOTOR SUBGRUPO=B-04BLOQUE CINLINDRO
EDICION N: 1 GROUP=ENGINE SUBGROUP=B-04CYLINDER BLOCK
GROUPE=MOTEUR SUBGROUPE=B-04BLOC CYLINDRE

N.FIG PLATE N.FIG	N.PIEZA PARTNUMBER N.PIECE	CAN QTY OUT	DENOMINACION	DESCRIPTION	DENOMINATION	OBSERVACIONES
1	11200-80001	1	C/BLOQUE CILINDROS	CYLINDERS BLOCK ASSY	ENS.BLOC CYLINDRES	
	11200A80001	1	C/BLOQUE CILINDROS	CYLINDERS BLOCK ASSY	ENS.BLOC CYLINDRES	E04
2	11250-80000	1	TAPON	PLUG	BOUCHON	
3	09241-30002	2	TAPON TIPO COPA	CUP TYPE PLUG	BOUCHON TYPE COUPE	
4	09241-20002	2	TAPON TIPO COPA	CUP TYPE PLUG	BOUCHON TYPE COUPE	
5	09246-05003	1	TAPON GALERIA	OIL HOSE PLUG	BOUCHON GALLERIE	
6	09246-06002	1	TAPON GALERIA	OIL HOSE PLUG	BOUCHON GALLERIE	
7	01517-10606	10	TORNILLO TAPA	COVER SCREW	VIS COUVERCLE	
8	11221-73000	1	PLACA DE CIERRE	LOCK PLATE	PLAQUE DE FERMETURE	
9	11229A73000	1	JUNTA PLACA	PLATE GASKET	JOINT PLAQUE	
10	01514-06103	6	TORNILLO	SCREW	VIS	
11	11311-80000	1	C/PLACA SUPERIOR	UPPER PLATE ASSY	ENS.PLAQUE SUP.	
12	11320-73000	1	C/PLACA INFERIOR	LOWER PLATE ASSY	ENS.PLAQUE INF.	
13	11322-73000	1	TIRA SELLANTE	WEATHERSTRIP	BANDE ETANCHE	
14	11323-73000	1	TIRA SELLANTE	WEATHERSTRIP	BANDE ETANCHE	
15	16910-80002	1	VARILLA ACEITE	OIL LEVEL GAUGE	TIGE D'HUILE	
16	16915-80000	1	SOPORTE VARILLA	GAUGE BRACKET	SUPPORT TIGE	
17	37820A82000	1	INTERRUPTOR PRESION	PRESSURE SWITCH	INTERRUPT.PRESSION	

FIG.4

B-05

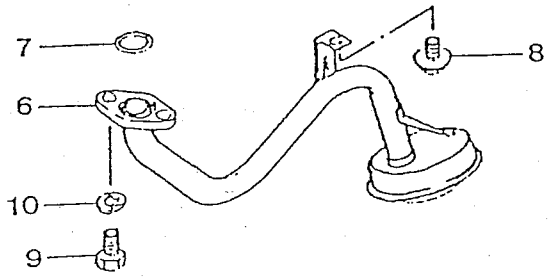

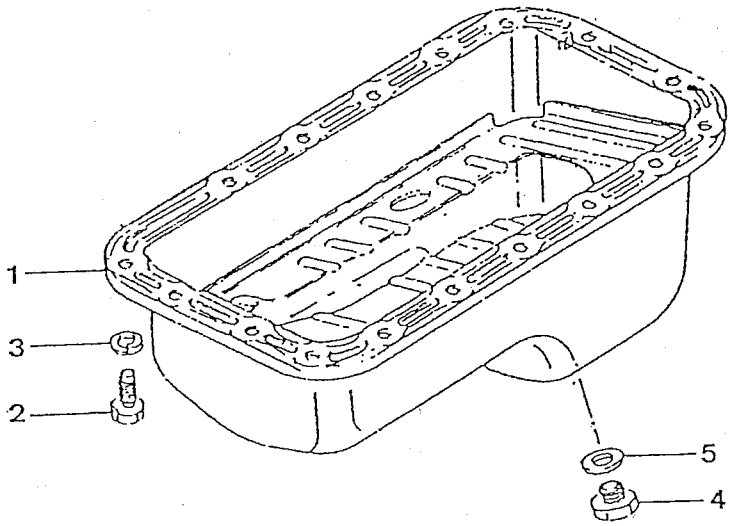

FRONT

PUBLICACION N:A01116 GRUPO=MOTOR SUBGRUPO=B-05CARTER ACEITE
EDICION N: 1 GROUP=ENGINE SUBGROUP=B-05OIL PAN
GROUPE=MOTEUR SUBGROUPE=B-05CARTER D'HUILE

N.FIG PLATE N.FIG	N.PIEZA PARTNUMBER N.PIECE	CAN QTY OUT	DENOMINACION	DESCRIPTION	DENOMINATION	OBSERVACIONES
1	11510A80002	1	C/CARTER ACEITE	OIL PAN ASSY	ENS.CARTER HUILE	
2	09100A06116	18	TORNILLO	SCREW	VIS	
3	08321A31066	18	ARANDELA MUELLE	SPRING WASHER	RONDELLE ELASTIQUE	
4	09247-12101	1	TAPON LLENADO	FILLER PLUG	BOUCHON REMPLISSAGE	
5	09168A12007	1	JUNTA	GASKET	JOINT	
6	16520-80001	1	FILTRO ASPIR.BOMBA	PUMP ASPIR.FILTER	FILTRE ASPIR.POMPE	
7	09280-16005	1	JUNTA TORICA	O GASKET	JOINT TORIQUE	
8	01517-06103	1	TORNILLO FILTRO	FILTER SCREW	VIS FILTRE	
9	01107-06163	2	TORNILLO	SCREW	VIS	
10	08321A31063	2	ARANDELA MUELLE	SPRING WASHER	RONDELLE ELASTIQUE	

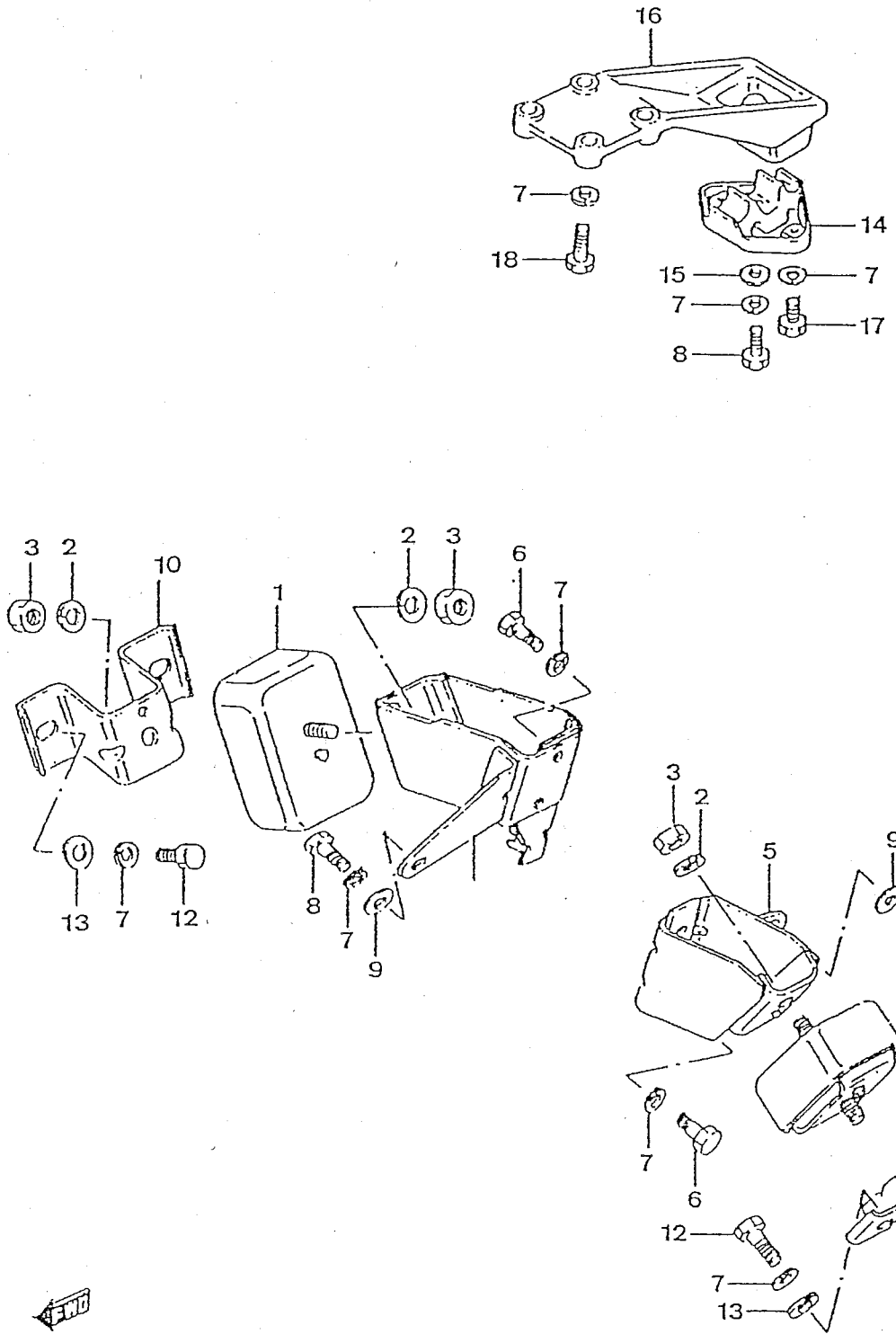
16
7
14
18
15
7
7
17
8
3
2
10
1
2
3
6
7
13
7
12
8
7
9
3
2
5
9
7
8
1
7
6
11
12
7
13
2
3

PUBLICACION N:A01116 GRUPO=MOTOR SUBGRUPO=B-06SOPORTE MOTOR
EDICION N: 1 GROUP=ENGINE SUBGROUP=B-06ENGINE BRACKET
GROUPE=MOTEUR SUBGROUPE=B-06SUPPORT MOTEUR

N.FIG PLATE N.FIG	N.PIEZA PARTNUMBER N.PIECE	CAN QTY OUT	DENOMINACION	DESCRIPTION	DENOMINATION	OBSERVACIONES
1	11610A80010	2	SOPORTE DEL.MOTOR	ENG.FRONT BRACKET	SUPPORT AV.MOTEUR	
2	08321B31103	4	ARANDELA MUELLE	SPRING WASHER	RONDELLE ELASTIQUE	
3	08310-12103	4	TUERCA	NUT	ECROU	
4	11640-80010	1	SOPORTE DEL.L/D	FRONT BRACKET,R/H	SUPPORT AVANT,C/D	
5	11650-80010	1	SOPORTE DEL.L/I	FRONT BRACKET,L/H	SUPPORT AVANT,C/G	
6	01107-08253	4	TORNILLO	SCREW	VIS	
7	08321B31086	13	ARANDELA	WASHER	RONDELLE	
8	01107-08203	3	TORNILLO	SCREW	VIS	
9	08322-11083	2	ARANDELA	WASHER	RONDELLE	
10	11661-80001	1	SOPORTE MOTOR,L/D	ENGINE BRACKET,R/H	SUPPORT MOTEUR,C/D	
11	11671-80010	1	SOPORTE MOTOR,L/I	ENGINE BRACKET,L/H	SUPPORT MOTEUR,C/G	
12	01707-10303	4	TORNILLO	SCREW	VIS	
13	09160-10001	4	ARANDELA PLANA	FLAT WASHER	RONDELLE PLATE	
14	11710A80000	1	C/SOPORTE MOTOR	ENGINE BRACKET ASSY	ENS.SUPPORT MOTEUR	
15	08322-11083	2	ARANDELA	WASHER	RONDELLE	
16	11741-80010	1	SOPORTE MOTOR TRAS.	REAR ENGINE BRACKET	SUPPORT MOTEUR ARR.	
17	01107-08163	2	TORNILLO	SCREW	VIS	
18	01107-08303	4	TORNILLO	SCREW	VIS	

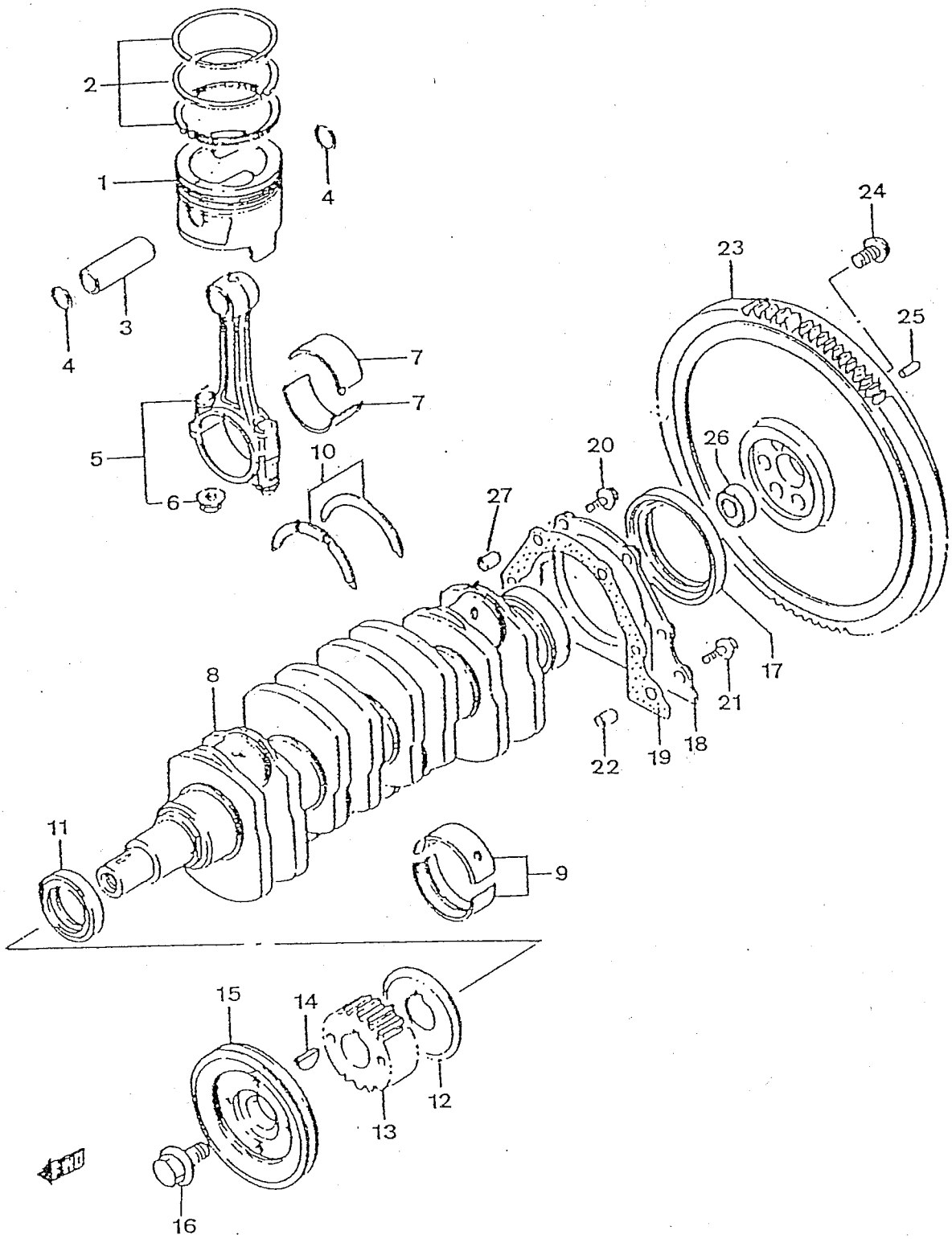
2
1
4
3
4
7
7
5
6
10
20
27
26
23
24
25
17
21
18
19
22
8
11
9
15
14
12
13
16
FRONT

PUBLICACION N:A01116 GRUPO=MOTOR SUBGRUPO=B-07CIGUENAL
EDICION N: 1 GROUP=ENGINE SUBGROUP=B-07CLUTCH
GROUPE=MOTEUR SUBGROUPE=B-07VILEBREQUIN

N.FIG PLATE N.FIG	N.PIEZA PARTNUMBER N.PIECE	CAN QTY OUT	DENOMINACION	DESCRIPTION	DENOMINATION	OBSERVACIONES
1	12111A75107	4	PISTON	PISTON	PISTON	
	12111A75107-025	4	PISTON 0,25	PISTON 0,25	PISTON 0,25	
	12111A75107-050	4	PISTON 0,50	PISTON 0,50	PISTON 0,50	
2	12140-75112	4	JUEGO SEGMENTOS	RINGS SET	JEU SEGMENTS	
	12140-75112-025	4	JUEGO SEGMENTOS 0,25	RINGS SET 0,25	JEU SEGMENTS 0,25	
	12140-75112-050	4	JUEGO SEGMENTOS 0,50	RINGS SET 0,50	JEU SEGMENTS 0,50	
3	12151A29001	4	BULON PISTON	PISTON PIN	BOULON PISTON	
4	09381A16001	8	CIRCLIP	CIRCLIP	CIRCLIP	
5	12160-73002	4	CONJUNTO BIELA	CONNECTING ROD ASSY	ENSEMBLE BIELLE	
6	09159-08033	8	TUERCA DE BIELA	CONNECTING ROD NUT	ECROU DE BIELLE	
7	12181-81051-025	8	SEMICOJINETE BIELA	CON.ROD SEMI-BEARING	DEMICOUSSINET BIELLE	
	12181-81051-050	8	SEMICOJINETE BIELA	CON.ROD SEMI-BEARING	DEMICOUSSINET BIELLE	
	12181-81051-0A0	8	SEMICOJINETE BIELA	CON.ROD SEMI-BEARING	DEMICOUSSINET BIELLE	
8	12221-80000	1	CIGUENAL	CRANKSHAFT	VILEBREQUIN	
9	12341-73001-025	10	JUEGO COJINETE 0,25	BEARING SET 0,25	JEU COUSSINET 0,25	
	12341-73001-050	10	JUEGO COJINETE 0,50	BEARING SET 0,50	JEU COUSSINET 0,50	
	12341-73001-0A0	10	JUEGO COJINETE STD	STD BEARING SET	JEU COUSSINET STD	
10	12351A73000	2	SEMICOJINETE BANCADA	BASE SEMIBEARING	DEMICOUSSINET BASE	
	12351A73000-025	2	SEMICOJINETE BANCADA	BASE SEMIBEARING	DEMICOUSSINET BASE	
	12351A73000-050	2	SEMICOJINETE BANCADA	BASE SEMIBEARING	DEMICOUSSINET BASE	
11	09283-32025	1	RETEN DELANTERO	FRONT RETAINER	ARRETOIR AVANT	
12	12635-78401	1	GUIA CORREA DISTRIB.	DISTRIB.BELT GUIDE	GUIDE COURROIE DISTR	
13	12631-78401	1	ENGRANAJE CIGUENAL	CRANKSHAFT GEAR	ENGRENAGE VILEBREQ.	
14	08341-31059	1	CHAVETA	COTTER	CLAVETTE	
15	12611-80500	1	POLEA CIGUENAL	CRANKSHAFT PULLEY	POULIE VILEBREQUIN	
16	09103-12002	1	TORNILLO POLEA	PULLEY SCREW	VIS POULIE	
17	09283-60005	1	RETEN TRASERO	REAR SEAL	ARRETOIR ARRIERE	
18	11341A73000	1	ALOJAMIENTO RETEN	SEAL HOUSING	LOGEMENT ARRETOIR	
19	11349B73002	1	JUNTA PORTA-RETEN	SEAL SUPPORT GASKET	JOINT PORTE-ARRETOIR	
20	01517-06203	4	TORNILLO	SCREW	VIS	
21	01517-06253	2	TORNILLO	SCREW	VIS	
22	04211A09109	4	FIJA	PIN	GOUJON	
23	12620A73001	1	C/VOLANTE MOTOR	ENGINE FLYWHEEL ASSY	ENS.VOLANT MOTEUR	
24	09103-10097	6	TORNILLO	SCREW	VIS	
25	04221-06129	1	FIJA	PIN	GOUJON	
26	12623-70B00	1	RODAMIENTO	BEARING	ROULEMENT	
27	09202A06004	3	FIJA	PIN	GOUJON	

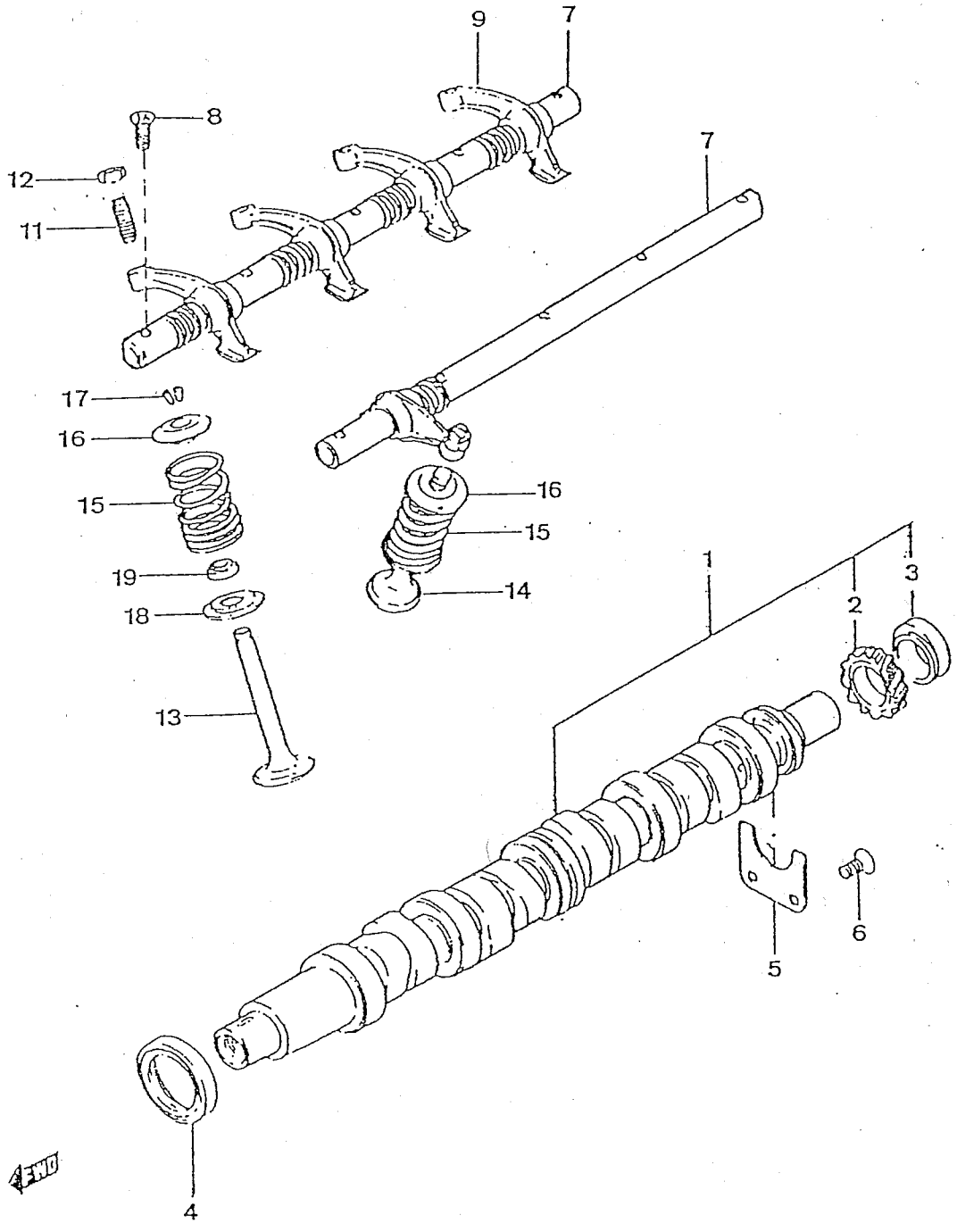
9
7
8
12
11
7
17
16
15
19
18
13
16
15
14
1
2
3
6
5
4
FRONT

PUBLICACION N:A01116 GRUPO=MOTOR SUBGRUPO=B-08ARBOL DE LEVAS
EDICION N: 1 GROUP=ENGINE SUBGROUP=B-08CAMSHAFT
GROUPE=MOTEUR SUBGROUPE=B-08ARBRE A CAMES

N.FIG PLATE N.FIG	N.PIEZA PARTNUMBER N.PIECE	CAN QTY OUT	DENOMINACION	DESCRIPTION	DENOMINATION	OBSERVACIONES
1	12710-80005	1	ARBOL DE LEVAS	CAMSHAFT	ARBRE A CAMES	
2	12721-73000	1	ENGRANAJE	GEAR	ENGRENAGE	
3	12731-73001	1	LEVA	CAM	CAME	
4	09283-32026	1	RETEN ARBOL LEVAS	CAMSHAFT SEAL	ARRETOIR ARBRE CAMES	
5	12749-73001	1	PLACA EMPUJE	THRUST PLATE	PLAQUE D'APPUI	
6	02122-06126	2	TORNILLO	SCREW	VIS	
7	12860A73004	2	EJE BALANCINES	ROCKER ARMS SHAFT	AXE CULBUTEURS	
8	02122-06166	10	TORNILLO	SCREW	VIS	
9	12841-60C00	8	BALANCIN ADM.Y ESC.	ADM.EXH.ROCKER ARM	CULBUTEUR ADM. & ECH	
10	12891-73002	8	MUELLE EJE BALANCIN.	ROCKER ARMS SPRING	RESSORT AXE CULBUT.	
11	12848A73010	8	TORNILLO	SCREW	VIS	
12	09159-07002	8	TUERCA AJUSTE	ADJUSTING NUT	ECROU D'AJUSTAGE	
13	12911C78100	4	VALVULA ADMISION	INLET VALVE	SOUPAPE ADMISSION	
	12911D78100	4	VALVULA ADMISION	INLET VALVE	SOUPAPE ADMISSION	ALTERN.
14	12915C73002	4	VALVULA ESCAPE	EXHAUST VALVE	SOUPAPE ECHAPPEMENT	
	12915D73002	4	VALVULA ESCAPE	EXHAUST VALVE	SOUPAPE ECHAPPEMENT	ALTERN.
15	12921-73002	8	MUELLE VALVULA	VALVE SPRING	RESSORT SOUPAPE	
16	12931A82010	8	FIADOR	LOCK	GOUPILLE	
17	12932-82000	16	FIADOR	LOCK	GOUPILLE	
18	12933-73000	8	ASIENTO MUELLE	SPRING SEAT	ASSISE RESSORT	
19	09289-07005	8	RETEN	SEAL	ARRETOIR	

FIG.8

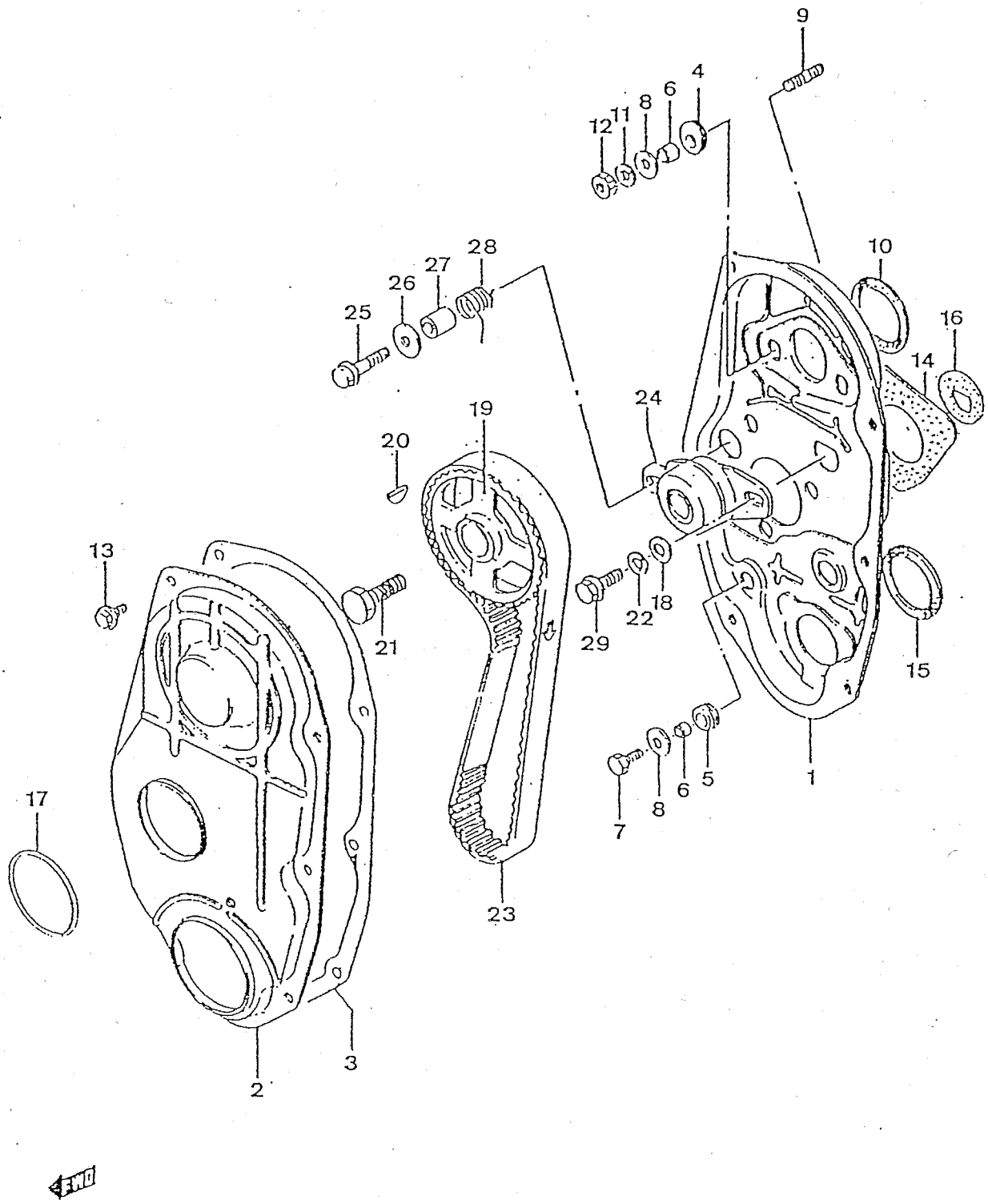
9
4
6
8
11
12
10
28
27
26
25
16
14
24
19
20
13
21
18
22
29
15
17
1
5
6
8
7
23
3
2

PUBLICACION N:A01116 GRUPO=MOTOR SUBGRUPO=B-09DISTRIBUCION
EDICION N: 1 GROUP=ENGINE SUBGROUP=B-09TIMING
GROUPE=MOTEUR SUBGROUPE=B-09DISTRIBUTION

N.FIG PLATE N.FIG	N.PIEZA PARTNUMBER N.PIECE	CAN QTY OUT	DENOMINACION	DESCRIPTION	DENOMINATION	OBSERVACIONES
1	11360A78100	1	CARTER DISTRIBUCION	TIMING CASE	CARTER DISTRIBUTION	
2	11391A73003	1	TAPA EXTERIOR	OUTER COVER	COUVERCLE EXTERIEUR	
3	11399A73010	1	JUNTA CARTER	CASE GASKET	JOINT CARTER	
4	11398-73000	2	CASQUILLO GOMA	RUBBER BUSH	BAGUE CAOUTCHOUC	
5	09308-10004	2	CASQUILLO GOMA	RUBBER BUSH	BAGUE CAOUTCHOUC	
6	09180-06106	4	CASQUILLO DISTANCIAD	SPACER BUSH	BAGUE SEPARATEUR	
7	09100-06127	4	TORNILLO	SCREW	VIS	
8	09160-06027	4	ARANDELA PLANA	FLAT WASHER	RONDELLE PLATE	
9	09108-06078	2	ESPARRAGO	STUD	GOUJON	
10	11486-78110	1	JUNTA SELLANTE	SEALING GASKET	JOINT ETANCHE	
11	08321A31063	2	ARANDELA MUELLE	SPRING WASHER	RONDELLE ELASTIQUE	
12	08310-11063	2	TUERCA	NUT	ECROU	
13	01514-06103	6	TORNILLO	SCREW	VIS	
14	11482-73004	1	JUNTA SELLANTE	SEALING GASKET	JOINT ETANCHE	
15	11483-73001	1	JUNTA SELLANTE	SEALING GASKET	JOINT ETANCHE	
16	11485-73000	1	JUNTA SELLANTE	SEALING GASKET	JOINT ETANCHE	
17	11484-73000	1	ANILLO TORICO	O RING	ANNEAU TORIQUE	
18	09160-08033	1	ARANDELA PLANA	FLAT WASHER	RONDELLE PLATE	
19	12741-78402	1	ENGRANAJE DISTRIB.	TIMING GEAR	ENGRENAGE DISTRIB.	
20	08341-31059	1	CHAVETA	PIN	CLAVETTE	
21	09103-12002	1	TORNILLO	SCREW	VIS	
22	08321B31086	1	ARANDELA MUELLE	SPRING WASHER	RONDELLE ELASTIQUE	
23	12761A78400	1	CORREA DISTRIBUCION	TIMING BELT	COURROIE DISTRIB.	
	12761B78400	1	CORREA DISTRIBUCION	TIMING BELT	COURROIE DISTRIB.	ALTERN.
24	12810-84001	1	C/ TENSOR CORREA	BELT TENSIONER ASSY	ENS.TENDEUR COURROIE	ALTERN.
	12810A73003	1	C/ TENSOR CORREA	BELT TENSIONER ASSY	ENS.TENDEUR COURROIE	
25	01517-08406	1	TORNILLO	SCREW	VIS	
26	09160T08075	1	ARANDELA PLANA	FLAT WASHER	RONDELLE PLATE	
27	09180-08111	1	SEPARADOR	SPACER	ENTRETOISE	
28	12821-78100	1	MUELLE TENSOR	TENSIONER SPRING	RESSORT TENDEUR	
29	09103-08152	1	TORNILLO	SCREW	VIS	

FIG.9

C-02

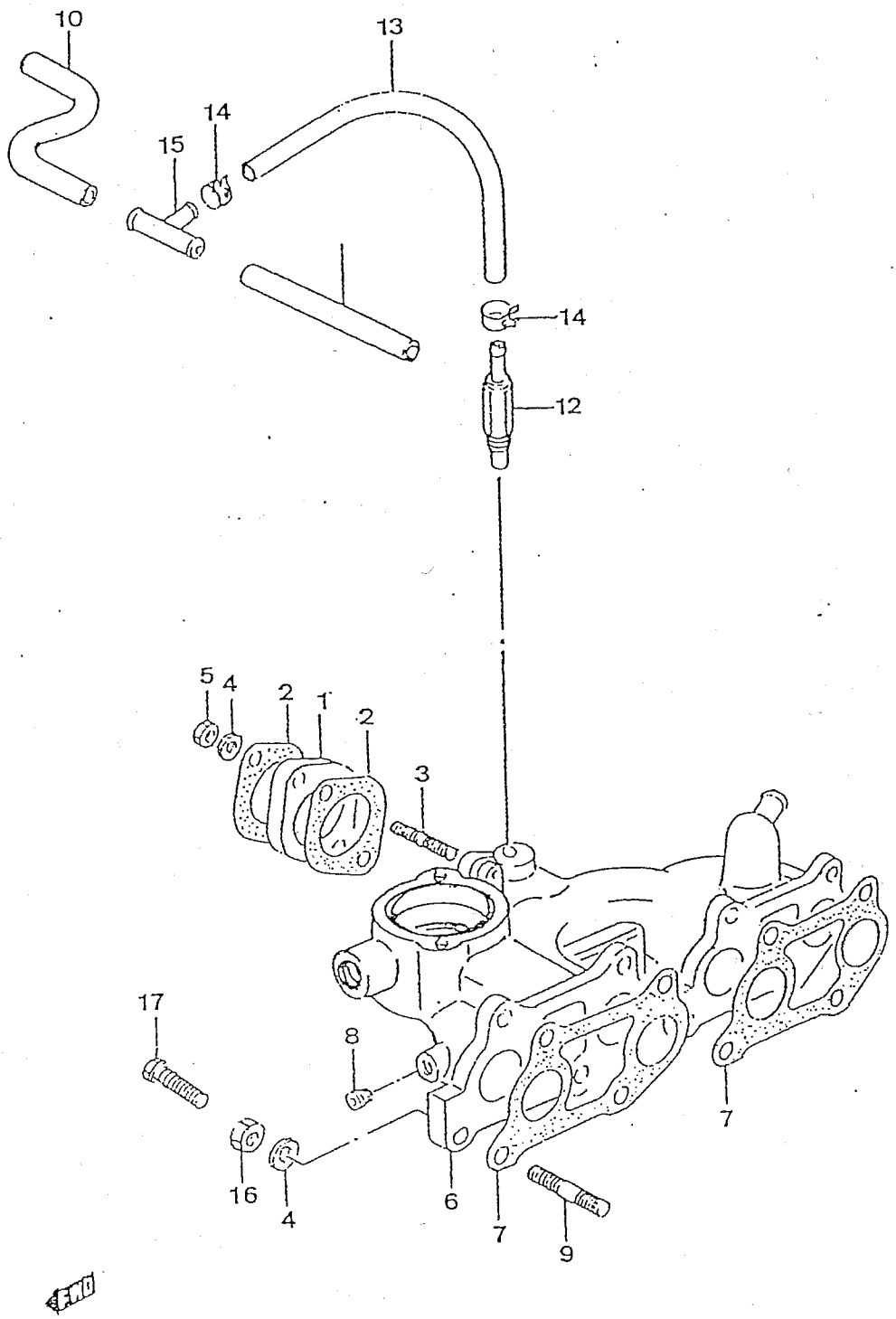

PUBLICACION N:A01116 GRUPO=SISTEMA ALIMENTACION SUBGRUPO=C-02COLECTOR ADM.
EDICION N: 1 GROUP=FEEDING SYSTEM SUBGROUP=C-02INLET MANIFOLD
GROUPE=SYSTEME ALIMENTATION SUBGROUPE=C-02COLLECTEUR ADM.

N.FIG PLATE N.FIG	N.PIEZA PARTNUMBER N.PIECE	CAN QTY OUT	DENOMINACION	DESCRIPTION	DENOMINATION	OBSERVACIONES
1	13121-80000	1	SEPARADOR CARBURADOR	CARBURETTER SPACER	SEPARATEUR CARBUR.	
2	13125-80000	2	JUNTA CARBURADOR	CARBURETTER GASKET	JOINT CARBURATEUR	W/ ABESTOS
	13125A80000	2	JUNTA CARBURADOR	CARBURETTER GASKET	JOINT CARBURATEUR	NO ABESTOS
3	09108-08168	2	ESPARRAGO	STUD	GOUJON	
4	08321B31086	10	ARANDELA	WASHER	RONDELLE	
5	08310-11086	10	TUERCA	NUT	ECROU	
6	13110-80050	1	COLECTOR ADMISION	INLET MANIFOLD	COLLECTEUR ADMISION	H 126673
	13110B80050	1	COLECTOR ADMISION	INLET MANIFOLD	COLLECTEUR ADMISSION	D 126674
	13110C80050	1	COLECTOR ADMISION	INLET MANIFOLD	COLLECTEUR ADMISSION	D 126674-W/PIERBURG
7	13119B73001	2	JUNTA COLECTOR ADM.	INLET MANIF.GASKET	JOINT COLL.ADMISSION	
8	09246A05001	1	TAPON	PLUG	BOUCHON	
9	01411-08203	4	ESPARRAGO	STUD	GOUJON	
10	11191A80000	1	MANGUITO	HOSE	MANCHON	
11	11191A78100	1	MANGUITO RESPIRADERO	BREATHER HOSE	MANCHON RESPIRATEUR	
12	18118-80000	1	VALVULA PCV	PCV VALVE	SOUPAPE PCV	
13	11193A80000	1	MANGUITO PCV	PCV HOSE	MANCHON PCV	
	11193B80000	1	MANGUITO T A VALV.	T TO VALVE HOSE	MANCHON T A SOUPAPE	E02
14	C0010-00000	2	ABRAZADERA	CLAMP	COLLIER	
15	09367-14003	1	T DE DERIVACION	UNION T	T DE DERIVATION	
16	08310-11083	4	TUERCA	NUT	ECROU	
17	01517-08203	4	TORNILLO	SCREW	VIS	

GRUPO 02 SISTEMA ALIMENTACION

GROUP 02 FEEDING SYSTEM

GROUP 02 SYSTEME ALIMENTATION

COMPOSICION.....COMPOSITION.....COMPOSICION

REFERENCIA PARTNUMBER NUM.PIECE	DENOMINACION	DESCRIPTION	DENOMINATION
402009	C-02COLECTOR ADM.	C-02INLET MANIFOLD	C-02COLLECTEUR ADM.
402010	C-03CARBURADOR	C-03CARBURETTER	C-03CARBURATEUR
402010.1	C-03.1CARBURADOR	C-03.1CARBURETTER	C-03.1CARBURATEUR
402011	C-04FILTRO AIRE	C-04AIR FILTER	C-04FILTRE A AIR
402012	C-05COLECTOR ESCAPE	C-05EXHAUST MANIFOLD	C-05COLLECTEUR ECHAP
402013	C-06SISTEMA ESCAPE	C-06EXHAUST SYSTEM	C-06SYSTEME ECHAPP.
402014	C-07BOMBA COMBUST.	C-07FUEL PUMP	C-07POMPE CARBURANT
402015	C-08BOMBA ACEITE	C-08OIL PUMP	C-08POMPE A HUILE
402016	C-09BOMBA AGUA	C-09WATER PUMP	C-09POMPE A EAU
402016.1	C-10DEPOSITO COMB.	C-10FUEL TANK	C-10RESERVOIR CARB.

PUBLICACION A01116 EDIC = 1

FIG.10

C-03

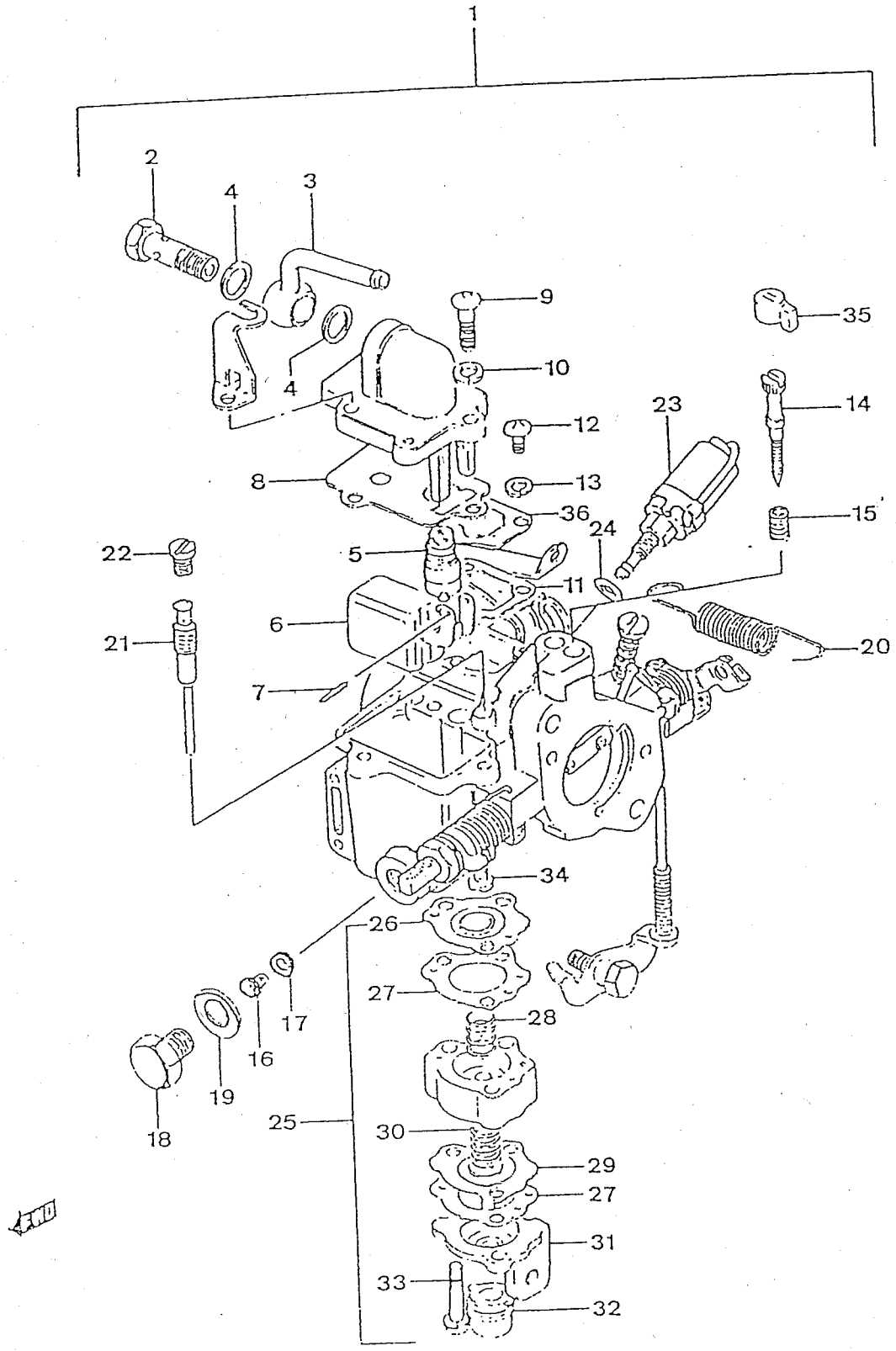
1
2
4
3
9
35
10
4
14
23
12
8
13
36
15
24
22
5
11
6
20
21
7
34
26
17
27
28
16
19
18
25
30
29
27
31
33
32
FWD

PUBLICACION N:A01116 GRUPO=SISTEMA ALIMENTACION SUBGRUPO=C-03CARBURADOR
EDICION N: 1 GROUP=FEEDING SYSTEM SUBGROUP=C-03CARBURETTER
GROUPE=SYSTEME ALIMENTATION SUBGROUPE=C-03CARBURATEUR

N.FIG PLATE N.FIG	N.PIEZA PARTNUMBER N.PIECE	CAN QTY OUT	DENOMINACION	DESCRIPTION	DENOMINATION	OBSERVACIONES
1	13200-80300	1	CARBURADOR	CARBURETTER	CARBURATEUR	
2	13274-80000	1	TORNILLO DE UNION	UNION SCREW	VIS D'UNION	
3	13272-80000	1	ACOPLAMIENTO	COUPLING	COUPLEUR	
4	13292-80000	2	JUNTA	GASKET	JOINT	
5	13370-80000	1	VALVULA DE AGUJA	NEEDLE VALVE	SOUPAPE AIGUILLE	
6	13250-80000	1	FLOTADOR	FLOAT	FLOTTEUR	
7	13254-80000	1	PASADOR FLOTADOR	FLOAT PIN	CLAVETTE FLOTTEUR	
8	13251-80000	1	JUNTA FLOTADOR	FLOAT GASKET	JOINT FLOTTEUR	
9	02112-05206	3	TORNILLO	SCREW	VIS	
10	08321-21058	3	ARANDELA	WASHER	RONDELLE	
11	13212-80000	1	JUNTA	GASKET	JOINT	
12	02112-04108	3	TORNILLO	SCREW	VIS	
13	08321-21048	3	ARANDELA GROWER	GROWER WASHER	RONDELLE GROWER	
14	13269-80000	1	TORNILLO AJUSTE	ADJUSTING SCREW	VIS D'AJUSTAGE	
15	13271-80000	1	MUELLE	SPRING	RESSORT	
16	09491-23014	1	TORNILLO MANDO	CONTROL SCREW	VIS COMMANDE	
17	13391-74030	1	JUNTA	GASKET	JOINT	
18	13248-80000	1	TAPON	PLUG	BOUCHON	
19	13249-80000	1	JUNTA	GASKET	JOINT	
20	13573-80000	1	MUELLE	SPRING	RESSORT	
21	09492-45017	1	SURTIDOR RALENTI	IDLE SPEED NOZZLE	GICLEUR RALENTI	
22	13246-80000	1	TORNILLO CHICLER	NOZZLE SCREW	VIS GICLEUR	
23	13610-80000	1	VALVULA CARBURADOR	CARBURETTER VALVE	SOUPAPE CARBURATEUR	
24	13611-80000	1	ARANDELA JUNTA	GASKET WASHER	RONDELLE JOINT	
25	13490-80000	1	JUEGO VALVULAS	VALVES SET	JEU SOUPAPES	
26	13492-80000	1	C/DIAFRAGMA	DIAPHRAGM ASSY	ENS.DIAPHRAGME	
27	13495-80000	2	JUNTA DIAFRAGMA	DIAPHRAGM GASKET	JOINT DIAPHRAGME	
28	13493-80000	1	MUELLE	SPRING	RESSORT	
29	13491-80000	1	DIAFRAGMA DE BOMBA	PUMP DIAPHRAGM	DIAPHRAGME POMPE	
30	13494-80000	1	MUELLE	SPRING	RESSORT	
31	13496-80000	1	C/CUBIERTA	COVER ASSY	ENS.COUVERCLE	
32	13497-80000	1	TAPON	PLUG	BOUCHON	
33	13498-80000	3	TORNILLO	SCREW	VIS	
34	13480-80000	1	C/VALVULA	VALVE ASSY	ENS.SOUPAPE	
35	13699-80020	1	TENSOR TORNILLO	SCREW TENSIONER	TENDEUR VIS	
36	13200-80820	1	J/JUNTA CARBURADOR	CARBU.GASKET SET	JEU JOINT CARBU.	

FIG.10.1

C-03.1

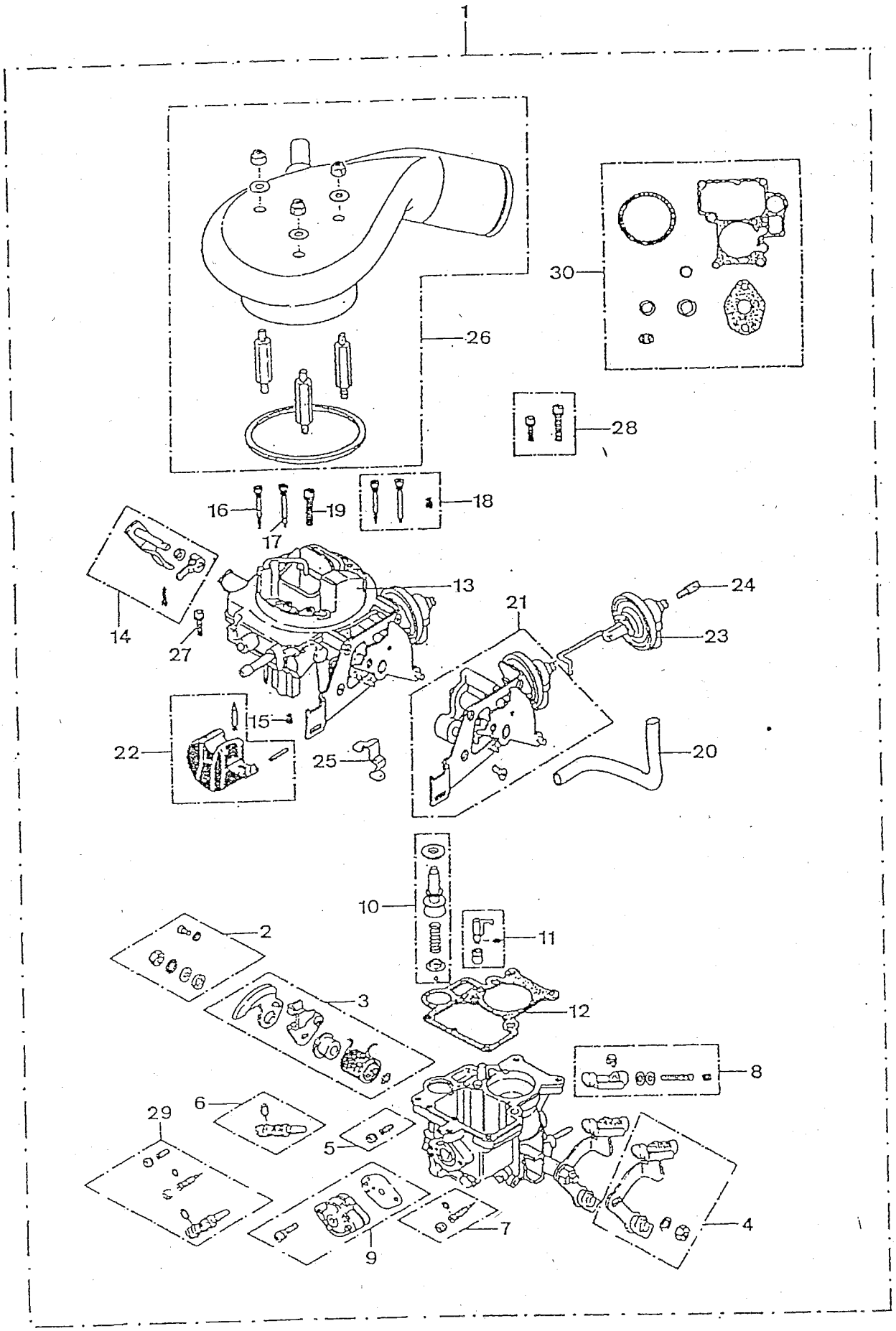
1
26
30
28
16
19
18
17
13
24
21
23
14
27
15
22
25
20
10
11
2
3
12
8
29
6
5
7
9
4

PUBLICACION N:A01116 GRUPO=SISTEMA ALIMENTACION SUBGRUPO=C-03.1CARBURADOR
EDICION N: 1 GROUP=FEEDING SYSTEM SUBGROUP=C-03.1CARBURETTER
GROUPE=SYSTEME ALIMENTATION SUBGROUPE=C-03.1CARBURATEUR

N.FIG PLATE N.FIG	N.PIEZA PARTNUMBER N.PIECE	CAN QTY OUT	DENOMINACION	DESCRIPTION	DENOMINATION	OBSERVACIONES
1	13200A80300	1	C/CARBURADOR	CARBURETTER ASSY	ENS.CARBURATEUR	PIERBURG
2	00000A00606	1	K/TORN-TUERCA-ARAND.	WASHER-NUT-SCREW KIT	KIT VIS-ECROU-RONDEL	
3	00000A00607	1	PALANCA TOPE	STOP LEVER	LEVIER ARRETOIR	
4	00000A00608	1	PALANCA MANDO MARIP	THROTTLE CONTR.LEVER	LEVIER CONTR.ETRANGL	
5	00000A00609	1	K/TORN.REGLAJE-TAPON	PLUG-ADJUST.SCREW K/	KIT VIS REGLAG-BOUCH	
6	00000A00610	1	TORN.VOLUMEN RALENTI	IDLE CAPACITY SCREW	VIS VOLUME RALENTI	
7	00000A00611	1	K/TORN.REGLAJE-RALEN	IDLE ADJUST.SCREW K/	VIS REGLAGE RALENTI	
8	00000A00612	1	PATIN,TORN.,ARANDELA	SLIPP.,SCREW,WASHER	PATIN,VIS,RONDELLE	
9	00000A00613	1	MEMBRANA ENRIQUECIDO	RICHED MIX DIAPHRAGM	MEMBRANE MEL.ENRICHI	
10	00000A00614	1	K/REPARACION BOMBA	PUMP REPAIR KIT	K/REPARATION POMPE	
11	00000A00615	1	BLOQUE INY.Y VALVULA	VALVE & INJ.BLOCK	BLOQUE INJ.& SOUPAPE	
12	00000A00616	1	JUNTA CUERPO-CUBIERT	GASKET,BODY-COVER	JOINT,CORPS-COUVERCL	
13	00000A00617	1	CUBIERTA COMPLETA	COMPLETE COVER	COUVERCLE COMPLET	
14	00000A00618	1	PALANCA ACCIO.BOMBA	PUMP OPERATION LEVER	LEVIER FONCT.POMPE	
15	00000A00619	1	CHICLE PRINCIPAL	MAIN NOZZLE	GICLEUR PRINCIPAL	
16	00000A00620	1	CHICLE RALENTI	IDLE SPEED NOZZLE	GICLEUR RALENTI	
17	00000A00621	1	CHICLE RALENTI	IDLE SPEED NOZZLE	GICLEUR RALENTI	
18	00000A00622	1	K/REPARACION CHICLE	NOZZLE REPAIR KIT	K/REPARATION GICLEUR	
19	00000A00623	1	TORNILLO Y ARANDELA	SCREW AND WASHER	VIS ET RONDELLE	
20	00000A00624	1	TUBO DE DEPRESION	DEPRESSION HOSE	TUYAU DE DEPRESSION	
21	00000A00625	1	SOPORTE STARTER	STARTER BRACKET	SUPPORT STARTER	
22	00000A00626	1	KIT FLOTADOR	FLOAT KIT	KIT FLOTTEUR	
23	00000A00627	1	KIT DIAFRAGMA	PULL-DOWN REPAIR KIT	KIT DIAPHRAGME	
24	00000A00628	1	TORN.REGUL.DIAFRAGMA	PULL-DOWN ADJ.SCREW	VIS REGLAGE DIAPERAG	
25	00000A00629	1	GRAPA	CLIP	CLIP	
26	00000A00630	1	CONEXION TOMA AIRE	AIR CONNECTION	CONNECTION PRISE AIR	
27	00000A00631	1	TORNILLO Y ARANDELA	SCREW AND WASHER	VIS ET RONDELLE	
28	00000A00632	1	K/TORNILLOS FIJACION	FASTENING SCREWS KIT	KIT VIS FIXATION	
29	00000A00633	1	K/TORNILLOS REGLAJE	ADJUSTING SCREWS KIT	KIT VIS REGLAGE	
30	00000A00634	1	K/REPARACION JUNTAS	GASKETS REPAIR KIT	KIT REPARATION JOINT	

FIG.11

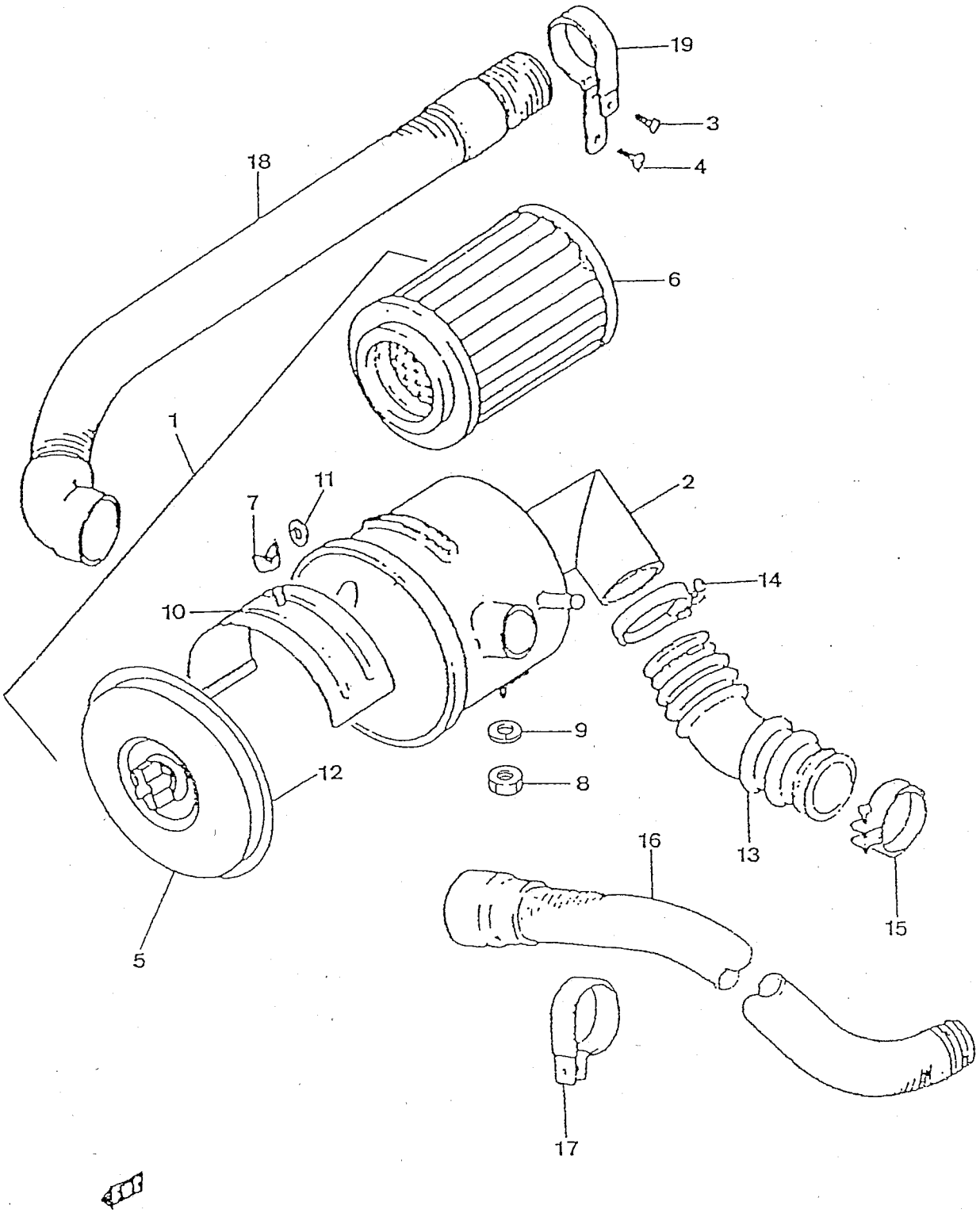

PUBLICACION N:A01116 GRUPO=SISTEMA ALIMENTACION SUBGRUPO=C-04FILTRO AIRE
EDICION N: 1 GROUP=FEEDING SYSTEM SUBGROUP=C-04AIR FILTER
GROUPE=SYSTEME ALIMENTATION SUBGROUPE=C-04FILTRE A AIR

N.FIG PLATE N.FIG	N.PIEZA PARTNUMBER N.PIECE	CAN QTY OUT	DENOMINACION	DESCRIPTION	DENOMINATION	OBSERVACIONES
1	13701E80020	1	FILTRO AIRE MANN	AIR FILTER MANN	FILTRE AIR MANN	
2	13701F80020	1	CARCAZA FILTRO	FILTER HOUSING	LOGEMENT FILTRE	
3	03141-05103	1	TORNILLO	SCREW	VIS	
4	02142-06123	1	TORNILLO	SCREW	VIS	
5	00000A00009	1	TAPA FILTRO	FILTER COVER	COUVERCLE FILTRE	
6	13780B79210	1	CARTUCHO FILTRO	FILTER CARTRIDGE	CARTOUCHE FILTRE	
7	00000A00010	1	TUERCA	NUT	ECROU	
8	08310-11083	2	TUERCA	NUT	ECROU	
9	08321B31086	2	ARANDELA	WASHER	RONDELLE	
10	00000A00008	1	CORREDERA	PROTECTOR	PROTECTEUR	
11	00000A00011	1	ARANDELA	WASHER	RONDELLE	
12	00000A00012	1	JUNTA GOMA	RUBBER GASKET	JOINT CAOUTCHOUC	
13	13881-80010	1	MANGUITO FILTRO	FILTER HOSE	MANCHON FILTRE	
	13881A80010	1	MANGUITO FILTRO	FILTER HOSE	MANCHON FILTRE	E02
14	08004-00000	1	ABRAZADERA	CLAMP	COLLIER	
15	08003-00000	1	ABRAZADERA	CLAMP	COLLIER	
16	13840-80002	1	MANGU.AIRE CALIENTE	HOT AIR HOSE	MANCHON AIR CHAUD	T2,T3
	13840A80002	1	MANGU.AIRE CALIENTE	HOT AIR HOSE	MANCHON AIR CHAUD	T1
17	09403A48401	1	ABRAZADERA	CLAMP	COLLIER	
18	13870A80030	1	TUBO AIRE FRIO	COLD AIR HOSE	TUYAU AIR FROID	
19	13896A79100	1	ABRAZADERA	CLAMP	COLLIER	

FIG.12

C-05

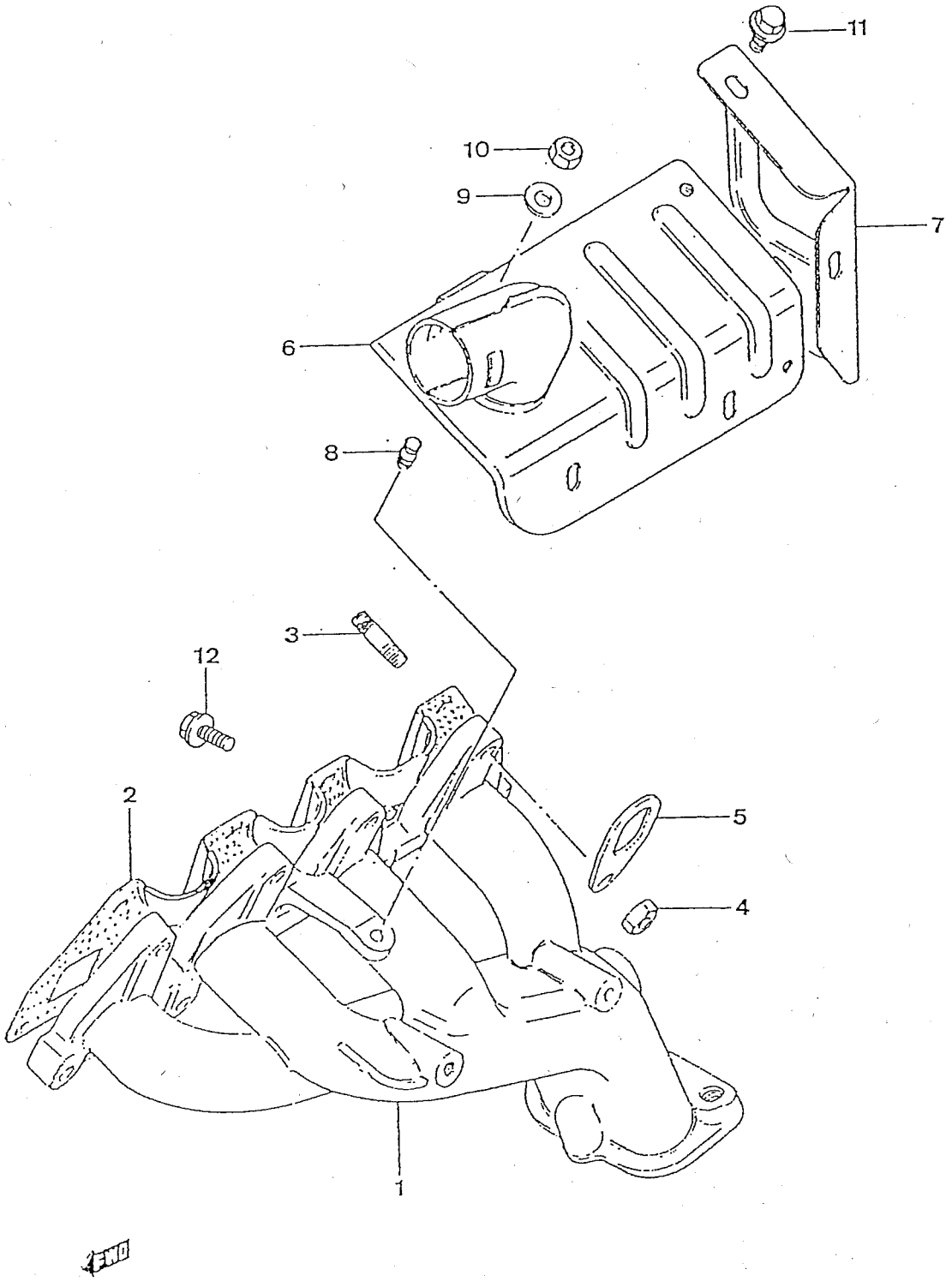

PUBLICACION N:A01116 GRUPO=SISTEMA ALIMENTACION SUBGRUPO=C-05COLECTOR ESCAPE
EDICION N: 1 GROUP=FEEDING SYSTEM SUBGROUP=C-05EXHAUST MANIFOLD
GROUPE=SYSTEME ALIMENTATION SUBGROUPE=C-05COLLECTEUR ECHAP

N.FIG PLATE N.FIG	N.PIEZA PARTNUMBER N.PIECE	CAN QTY OUT	DENOMINACION	DESCRIPTION	DENOMINATION	OBSERVACIONES
1	14111-80000	1	COLECTOR ESCAPE	EXHAUST MANIFOLD	COLLECTEUR ECHAPP.	
2	14140A73000	1	JUNTA COLECTOR	MANIFOLD GASKET	JOINT COLLECTEUR	
3	01411-08303	2	ESPARRAGO	STUD	GOUJON	
4	08310-11083	2	TUERCA	NUT	ECROU	
5	11851-73000	3	GANCHO MOTOR	ENGINE HOOK	CROCHET MOTEUR	
6	14130A80001	1	C/DEFLECTOR	LOUVER ASSY	ENS.DEFLECTEUR	
7	14135-80000	1	DEFLECTOR TRASERO	REAR LOUVER	DEFLECTEUR ARRIERE	
8	01411-06123	4	ESPARRAGO	STUD	GOUJON	
9	08322-21063	4	ARANDELA PLANA	FLAT WASHER	RONDELLE PLATE	
10	08310-11063	4	TUERCA	NUT	ECROU	
11	01514-06103	2	TORNILLO	SCREW	VIS	
12	01107-08253	4	TORNILLO	SCREW	VIS	
	01107-08303	2	TORNILLO	SCREW	VIS	

FIG.13

C-06

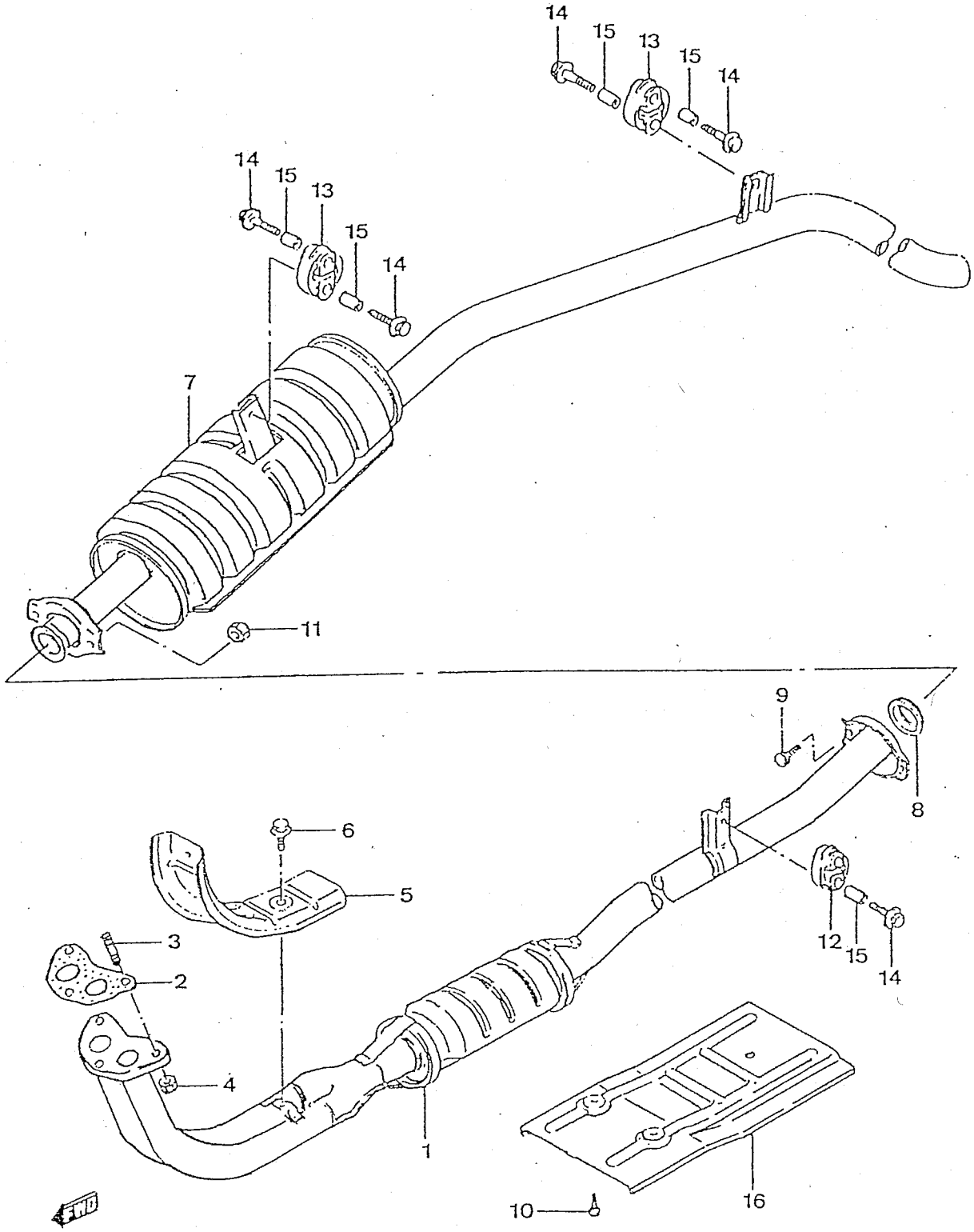

PUBLICACION N:A01116 GRUPO=SISTEMA ALIMENTACION SUBGRUPO=C-06SISTEMA ESCAPE
EDICION N: 1 GROUP=FEEDING SYSTEM SUBGROUP=C-06EXHAUST SYSTEM
GROUPE=SYSTEME ALIMENTATION SUBGROUPE=C-06SYSTEME ECHAPP.

N.FIG PLATE N.FIG	N.PIEZA PARTNUMBER N.PIECE	CAN QTY OUT	DENOMINACION	DESCRIPTION	DENOMINATION	OBSERVACIONES
1	14150A80040	1	TUBO ESCAPE CENTRAL	CENTRAL EXHAUST HOSE	TUYAU ECHAPP.CENTRAL	
2	14181C80000	1	JUNTA TUBO	HOSE GASKET	JOINT TUYAU	
3	01411-10253	3	ESPARRAGO COLECTOR	MANIFOLD STUD	GOUJON COLLECTEUR	
4	09159A10017	3	TUERCA	NUT	ECROU	
5	14220-80000	1	SOPORTE TUBO ESCAPE	EXH.HOSE BRACKET	SUPPORT TUYAU ECHAPP	
6	01514-06103	1	TORNILLO	SCREW	VIS	
7	14300A80022	1	C/SILENCIOSO	MUFFLER ASSY	ENS.SILENCIEUX	
8	14699-73001	1	JUNTA SILENCIOSO	MUFFLER GASKET	JOINT SILENCIEUX	
9	01107-08256	2	TORNILLO	SCREW	VIS	
10	03141-06123	3	TORNILLO	SCREW	VIS	
11	09159A08022	2	TUERCA TUBO CENTRAL	CENTRAL HOSE NUT	ECROU TUYAU CENTRAL	
12	14282-78010	1	SOPORTE TUBO	HOSE BRACKET	SUPPORT TUYAU	
13	14281-79010	2	SOPORTE SILENCIOSO	MUFFLER BRACKET	SUPPORT SILENCIEUX	
14	01514-08353	6	TORNILLO	SCREW	VIS	
15	09180-08095	6	DISTANCIADOR	SPACER	SEPARATEUR	
16	14231-80010	1	PANEL PROTECTOR	PROTECTING PANEL	PANNEAU PROTECTEUR	

FIG.14

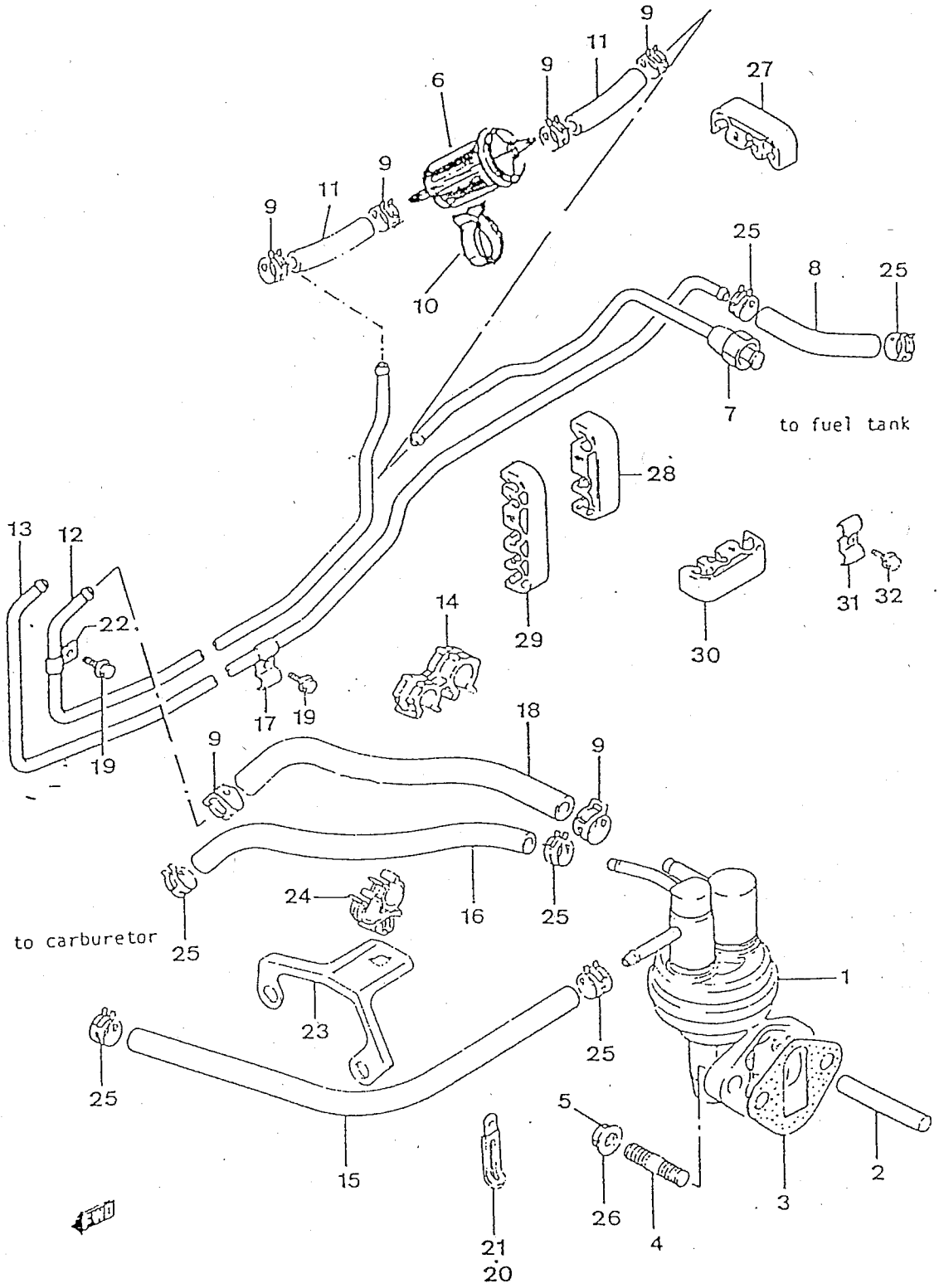
9
11
9
6
27
9
11
9
25
8
25
10
7
to fuel tank
28
29
13
12
14
30
31
32
22
17
19
19
18
9
9
24
16
25
to carburetor
25
1
23
25
25
5
15
26
4
3
2
21
20
FWD

PUBLICACION N:A01116 GRUPO=SISTEMA ALIMENTACION SUBGRUPO=C-07BOMBA COMBUST.
EDICION N: 1 GROUP=FEEDING SYSTEM SUBGROUP=C-07FUEL PUMP
GROUPE=SYSTEME ALIMENTATION SUBGROUPE=C-07POMPE CARBURANT

N.FIG PLATE N.FIG	N.PIEZA PARTNUMBER N.PIECE	CAN QTY OUT	DENOMINACION	DESCRIPTION	DENOMINATION	OBSERVACIONES
1	15100D80000	1	BOMBA COMBUSTIBLE	FUEL PUMP	POMPE CARBURANT	
2	15315-82000	1	VARILLA EMPUJADORA	TERUST ROD	TIGE D'APPUI	
3	15319C63B00	1	JUNTA BOMBA	PUMP GASKET	JOINT POMPE	
4	01107-08253	2	ESPARRAGO	STUD	GOUJON	
5	08310-11083	2	TUERCA	NUT	ECROU	
6	15410A63401	1	FILTRO COMBUSTIBLE	FUEL FILTER	FILTRE CARBURANT	
7	15810A70A10	1	TUBO SALIDA	OUTLET HOSE	TUYAU SORTIE	D 121457
	15810A80010	1	TUBO SALIDA	OUTLET HOSE	TUYAU SORTIE	H 121456
8	09343A04036	1	TUBO,L.125	HOSE,L.125	TUYAU,L.125	
9	00010-00000	8	ABRAZADERA	CLAMP	COLLIER	T1
	09401A11404	4	ABRAZADERA	CLAMP	COLLIER	T2,T3
10	09403A45301	1	ABRAZADERA	CLAMP	COLLIER	
11	09354-70124-059	2	TUBO	HOSE	TUYAU	
12	15821-84C00	1	TUBO,BOMBA A CARBUR.	HOSE,PUMP TO CARBUR.	TUYAU,POMPE A CARBUR	D 121457
	15821A83010	1	TUBO,BOMBA A CARBUR.	HOSE,PUMP TO CARBUR.	TUYAU,POMPE A CARBU.	H 121456
13	15861-83010	1	TUBO DE RETORNO	RETURN PIPE	TUYAU DE RETOUR	H 121456
	15861A70A42	1	TUBO DE RETORNO	RETURN PIPE	TUYAU DE RETOUR	D 121457
14	09408A00083	2	ABRAZADERA TUBO	HOSE CLAMP	COLLIER TUYAU	
15	15870-83002	1	TUBO RETORNO,L.440	RETURN PIPE,L.440	TUYAU RETOUR,L.440	
16	09354-54116-375	1	TUBO,BOMBA-CARBUR.	HOSE,PUMP-CARBUR.	TUYAU,POMPE-CARBUR.	T2,T3
	15830A83001	1	TUBO,BOMBA-CARBUR.	HOSE,PUMP-CARBUR.	TUYAU,POMPE-CARBUR.	T1
17	15819-78000	8	ABRAZADERA	CLAMP	COLLIER	
18	15840-83002	1	TUBO,BOMBA-FILTRO	HOSE,PUMP-FILTER	TUYAU,POMPE-FILTRE	
19	00011-00000	15	TORNILLO	SCREW	VIS	
20	09404A08405	1	ABRAZADERA	CLAMP	COLLIER	
21	24759A78130	1	ABRAZADERA	CLAMP	COLLIER	
22	09403-08309	4	ABRAZADERA	CLAMP	COLLIER	H 121456
23	09132-06006	2	TORNILLO	SCREW	VIS	
24	15891-73001	1	CLIP TUBO	HOSE CLIP	CLIP TUYAU	
25	09401B11402	4	ABRAZADERA	CLAMP	COLLIER	
26	08321B31086	2	ARANDELA MUELLE	SPRING WASHER	RONDELLE ELASTIQUE	
27	15879-78000	7	BRIDA TUBO COMBUS.	FUEL HOSE FLANGE	BRIDE TUYAU CARBUR.	H 121456
	15892-70A00	1	CLIP	CLIP	CLIP	D 121457
28	15893-70A00	3	CLIP	CLIP	CLIP	D 121457
29	15895-70A00	2	CLIP	CLIP	CLIP	D 121457
30	15897-70A00	1	CLIP	CLIP	CLIP	D 121457
31	09403-08310	2	BRIDA	CLAMP	COLLIER	H 121456
32	09132-06006	2	TORNILLO	SCREW	VIS	H 121456

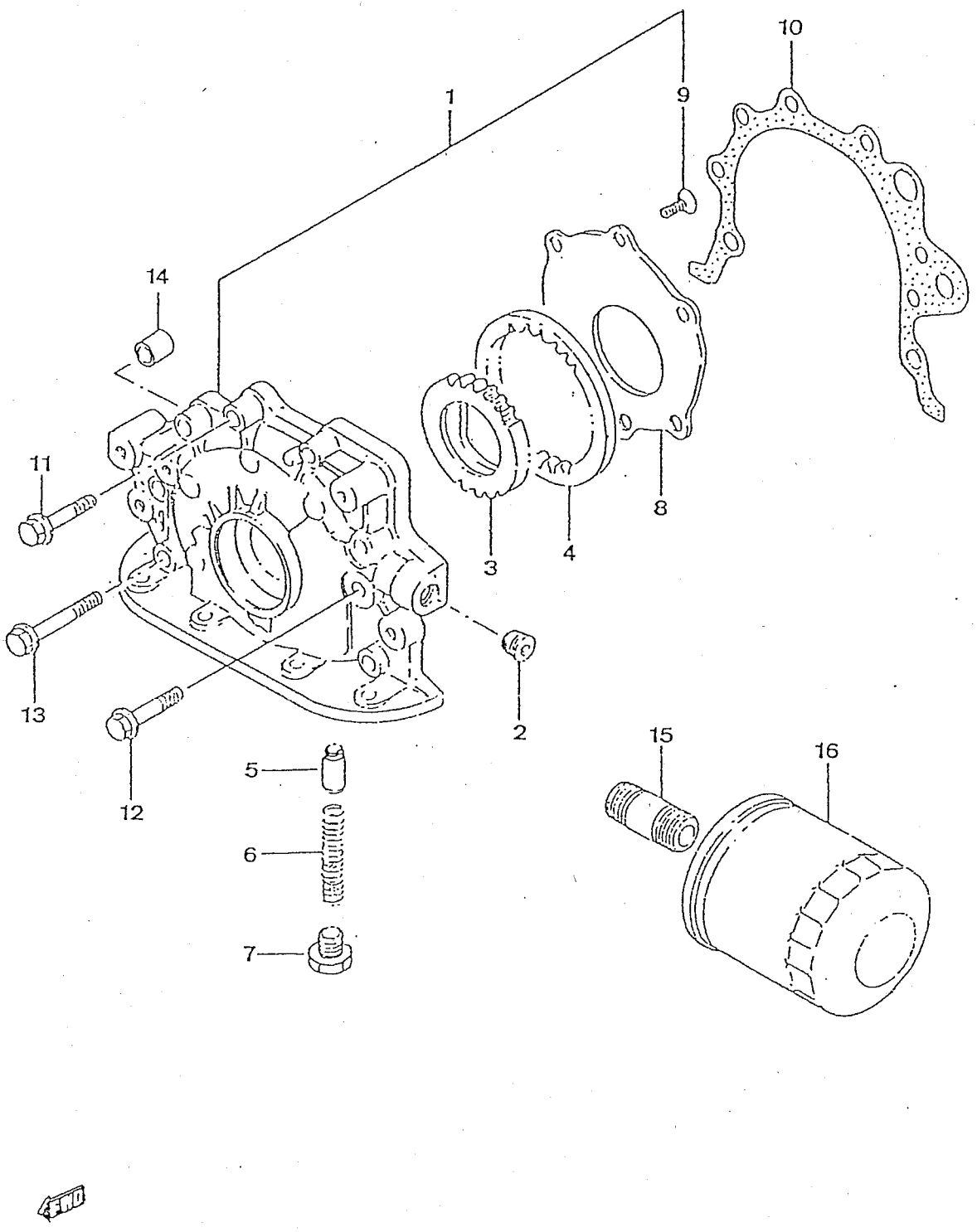
1
9
10
14
11
8
3
4
13
2
12
5
6
7
15
16

PUBLICACION N:A01116 GRUPO=SISTEMA ALIMENTACION SUBGRUPO=C-08BOMBA ACEITE
EDICION N: 1 GROUP=FEEDING SYSTEM SUBGROUP=C-08OIL PUMP
GROUPE=SYSTEME ALIMENTATION SUBGROUPE=C-08POMPE A HUILE

N.FIG PLATE N.FIG	N.PIEZA PARTNUMBER N.PIECE	CAN QTY OUT	DENOMINACION	DESCRIPTION	DENOMINATION	OBSERVACIONES
1	16100-73003	1	C/BOMBA ACEITE	OIL PUMP ASSY	ENS.POMPE HUILE	
2	09246-06002	1	TAPON GALERIA ACEITE	OIL HOSE PLUG	BOUCHON GALER.HUILE	
3	16131-73001	1	ENGRANAJE INTERIOR	INNER GEAR	ENGRENAGE INTERIEUR	
4	16132-73000	1	ENGRANAJE EXTERIOR	OUTER GEAR	ENGRENAGE EXTERIEUR	
5	16151-73000	1	VALVULA DESCARGA	RELIEF VALVE	SOUPAPE DECHARGE	
6	16152-73001	1	MUELLE VALVULA	VALVE SPRING	RESSORT SOUPAPE	
7	16153-73000	1	TAPON RETENED.MUELLE	SPRING RETAIN.PLUG	BOUCEON RETENUE RESS	
8	16161-73002	1	PLACA ENGRANAJE	GEAR PLATE	PLAQUE ENGRENAGE	
9	02122-06126	6	TORNILLO	SCREW	VIS	H 126688
	09126-06007	6	TORNILLO	SCREW	VIS	D 126689
10	16119B73003	1	JUNTA BOMBA ACEITE	OIL PUMP GASKET	JOINT POMPE HUILE	
11	01517-06303	1	TORNILLO	SCREW	VIS	
12	01517-06353	5	TORNILLO	SCREW	VIS	
13	01517-06403	2	TORNILLO	SCREW	VIS	
14	04211A09109	2	FIJA	PIN	CLAVETTE	
15	11241-73003	1	ADAPTADOR	ADAPTER	ADAPTATEUR	
16	16510A83000	1	FILTRO ACEITE	OIL FILTER	FILTRE HUILE	'PUROLATOR'
	16510B83000	1	FILTRO ACEITE	OIL FILTER	FILTRE HUILE	'MANN'

FIG.16

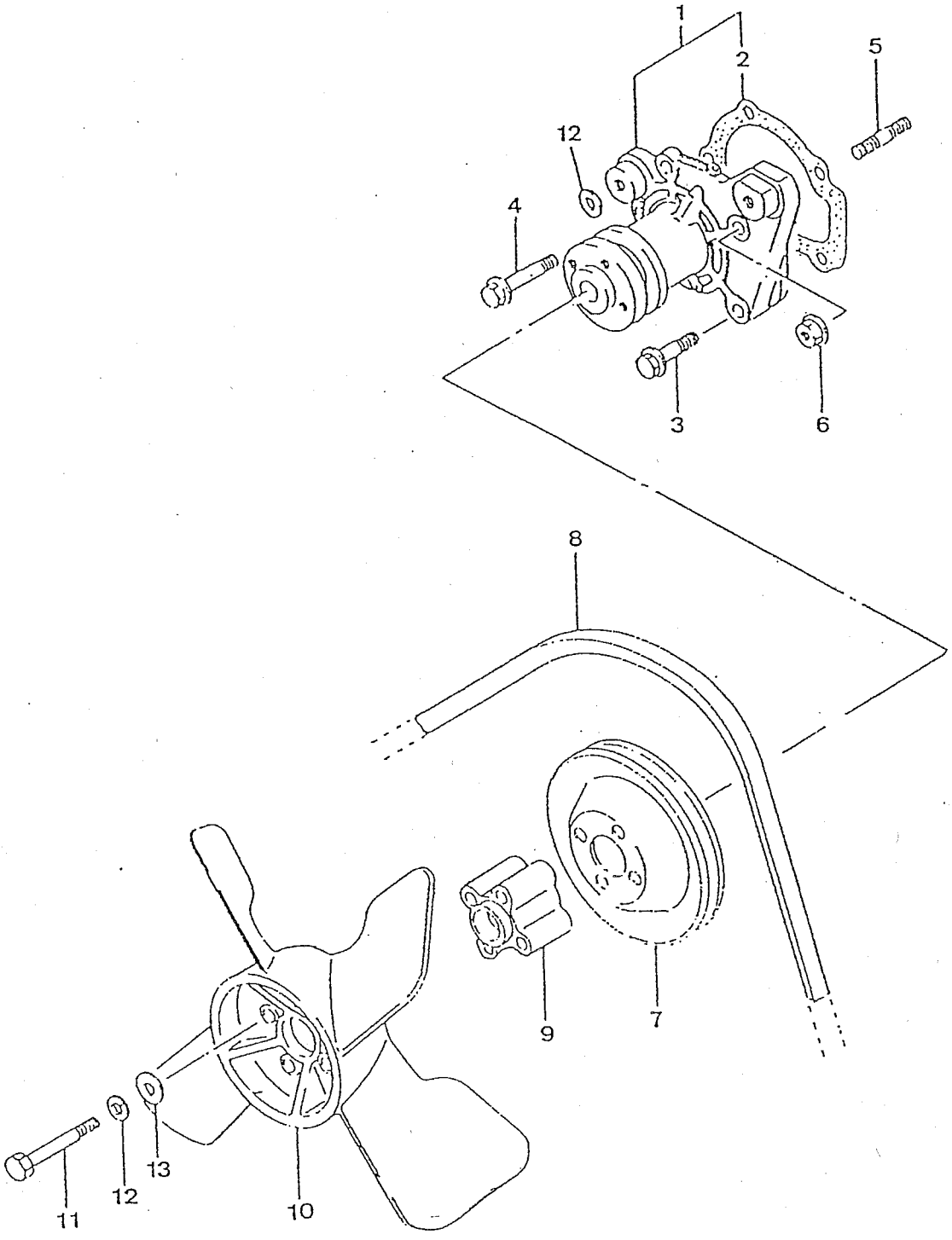

PUBLICACION N:A01116 GRUPO=SISTEMA ALIMENTACION SUBGRUPO=C-09BOMBA AGUA
EDICION N: 1 GROUP=FEEDING SYSTEM SUBGROUP=C-09WATER PUMP
GROUPE=SYSTEME ALIMENTATION SUBGROUPE=C-09POMPE A EAU

N.FIG PLATE N.FIG	N.PIEZA PARTNUMBER N.PIECE	CAN QTY OUT	DENOMINACION	DESCRIPTION	DENOMINATION	OBSERVACIONES
1	17400-78101	1	BOMBA DE AGUA	WATER PUMP	POMPE A EAU	
2	17431A73001	1	JUNTA BOMBA AGUA	WATER PUMP GASKET	JOINT POMPE A EAU	
3	01517-06303	2	TORNILLO	SCREW	VIS	
4	01517-06403	1	TORNILLO	SCREW	VIS	
5	09108-06040	2	ESPARRAGO	STUD	GOUJON	
6	08316A16063	2	TUERCA	NUT	ECROU	
7	17511B73001	1	POLEA BOMBA AGUA	WATER PUMP PULLEY	POULIE POMPE EAU	
8	17521C71520	1	CORREA ALTERNADOR	ALTERNATOR PULLEY	COURROIE ALTERNATEUR	
	17521D71520	1	CORREA ALTERNADOR	ALTERNATOR PULLEY	COURROIE ALTERNATEUR	ALTERN.
9	17131-80000	1	BUJE VENTILADOR	FAN HUB	MAPPE VENTILATEUR	
10	17111-73000	1	VENTILADOR	FAN	VENTILATEUR	
11	01107-06503	4	TORNILLO	SCREW	VIS	
12	08321A31063	4	ARANDELA MUELLE	SPRING WASHER	RONDELLE ELASTIQUE	
13	08322-21063	4	ARANDELA PLANA	FLAT WASHER	RONDELLE PLATE	

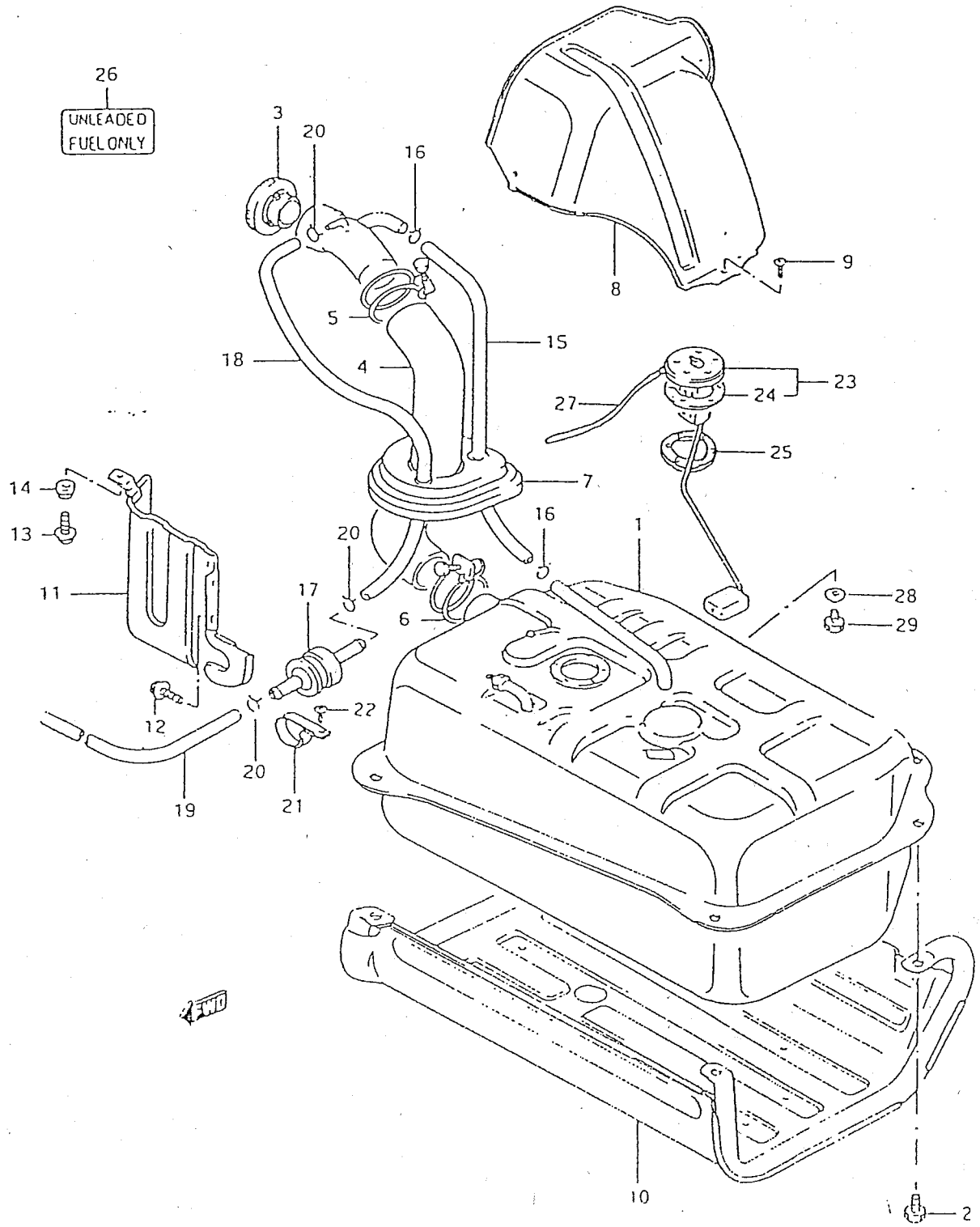
26
UNLEADED FUEL ONLY
3
20
16
9
8
5
15
18
4
23
24
27
25
14
7
13
20
16
1
11
17
28
6
29
22
12
20
21
19
10
2

PUBLICACION N:A01116 GRUPO=SISTEMA ALIMENTACION SUBGRUPO=C-10DEPOSITO COMB.
EDICION N: 1 GROUP=FEEDING SYSTEM SUBGROUP=C-10FUEL TANK
GROUPE=SYSTEME ALIMENTATION SUBGROUPE=C-10RESERVOIR CARB.

N.FIG PLATE N.FIG	N.PIEZA PARTNUMBER N.PIECE	CAN QTY OUT	DENOMINACION	DESCRIPTION	DENOMINATION	OBSERVACIONES
1	89101A80022	1	DEPOSITO COMBUSTIBLE	FUEL TANK	RESERVOIR CARBURANT	
2	01707-10253	4	TORNILLO	SCREW	VIS	T1
	01707-10303	4	TORNILLO	SCREW	VIS	T2,T3
	08321B31103	4	ARANDELA MUELLE	SPRING WASHER	RONDELLE ELASTIQUE	
	08322-21103	4	ARANDELA PLANA	FLAT WASHER	RONDELLE PLATE	T1
	09160-10001	4	ARANDELA PLANA	FLAT WASHER	RONDELLE PLATE	T2,T3
3	51592-00000	1	BOMBILLO CERRA.TAPON	PLUG LOCK CYLINDER	BARILLET SERR.BOUCH.	D 78034
	85410A79202	1	C/TAPON CON LLAVE	PLUG ASSY W/ KEY	E/BOUCHON AVEC CLE	D 78034
	85410B79202	1	TAPON DEPOSITO	TANK PLUG	BOUCHON RESERVOIR	H 78033
4	89241A80000	1	TUBO ENTRADA COMBUST	FUEL INLET HOSE	TUYAU ENTREE CARBUR.	
5	09400A60301	1	ABRAZADERA	CLAMP	COLLIER	
6	09400A53301	1	ABRAZADERA	CLAMP	COLLIER	
7	89281-80000	1	GUARDAPOLVOS	DUST SEAL	PARE-POUSSIERE	
8	89311A80000-0DG	1	PROTECTOR TUBO	HOSE PROTECTOR	PROTECTEUR TUYAU	
	89311A80000-19H	1	PROTECTOR TUBO	HOSE PROTECTOR	PROTECTEUR TUYAU	
	89311A80000-1FG	1	PROTECTOR TUBO	HOSE PROTECTOR	PROTECTEUR TUYAU	
	89311A80000-1FH	1	PROTECTOR TUBO	HOSE PROTECTOR	PROTECTEUR TUYAU	
	89311A80000-26U	1	PROTECTOR TUBO	HOSE PROTECTOR	PROTECTEUR TUYAU	
	89311A80000-37V	1	PROTECTOR TUBO	HOSE PROTECTOR	PROTECTEUR TUYAU	
	89311A80000-38B	1	PROTECTOR TUBO	HOSE PROTECTOR	PROTECTEUR TUYAU	
9	02142-06103	3	TORNILLO	SCREW	VIS	
10	89320A83000	1	PROTECTOR DEPOSITO	TANK PROTECTOR	PROTECTEUR RESERVOIR	
11	89312-83030	1	PROTECTOR TUBO	HOSE PROTECTOR	PROTECTEUR TUYAU	
12	01514-06106	2	TORNILLO	SCREW	VIS	
13	09103-06089	1	TORNILLO	SCREW	VIS	
14	09305-07003	1	PASACABLE	GROMMET	PASSE-CABLES	
15	09352-11163-410	1	MANGUITO RESPIRADERO	BREATHER HOSE	TUYAU RESPIRATEUR	
16	09401-16301	2	CLIP	CLIP	CLIP	
17	85451-75100	1	VALVULA 2 VIAS	2-WAY VALVE	SOUPAPE 2 VOIES	
18	09344-05040	1	MANGUITO SALIDA	OUTLET HOSE	TUYAU SORTIE	
19	09344-05042	1	MANGUITO ENTRADA	INLET HOSE	TUYAU ENTREE	
20	09401-08402	3	CLIP	CLIP	CLIP	
21	09403A23401	1	ABRAZADERA	CLAMP	COLLIER	
22	03141-06108	1	TORNILLO	SCREW	VIS	
23	34810A80001	1	AFORADOR	GAUGE	JAUGE	
24	34825A67012	1	JUNTA	GASKET	JOINT	
25	34810B80001	1	ANILLO	RING	ANNEAU	
26	79115-83000	1	ETIQUET.COMB.S/PLOMO	FUEL LABEL,NO/LEAD	ETIQU.CARB.S/PLOMB	
27	36822-84C00	1	CABLE AFORADOR	GAUGE CABLE	CABLE JAUGE	D 121457
	36822A80001	1	CABLE AFORADOR	GAUGE CABLE	CABLE JAUGE	H 121456
28	09168A12005	1	ARANDELA JUNTA	GASKET WASHER	RONDELLE JOINT	T1
29	09247A12101	1	TAPON LLENADO	FILLER PLUG	BOUCHON REMPLISSAGE	T1

GRUPO 03 REFRIGERACION

GROUP 03 COOLING

GROUP 03 REFROIDISSEMENT

COMPOSICION.....COMPOSITION.....COMPOSICION

REFERENCIA PARTNUMBER NUM.PIECE	DENOMINACION	DESCRIPTION	DENOMINATION
403017	D-02RADIADOR	D-02RADIATOR	D-02RADIATEUR
403018	D-03TERMOSTATO	D-03THERMOSTAT	D-03THERMOSTAT
403018.1	D-03.1VALVULA	D-03.1VALVE	D-03.1SOUPAPE
403019	D-04CONDUCTO CALEFAC	D-04HEATING DUCT	D-04CONDUIT CHAUFF.
403020	D-05CALEFACTOR	D-05HEATER	D-05CHAUFFAGE

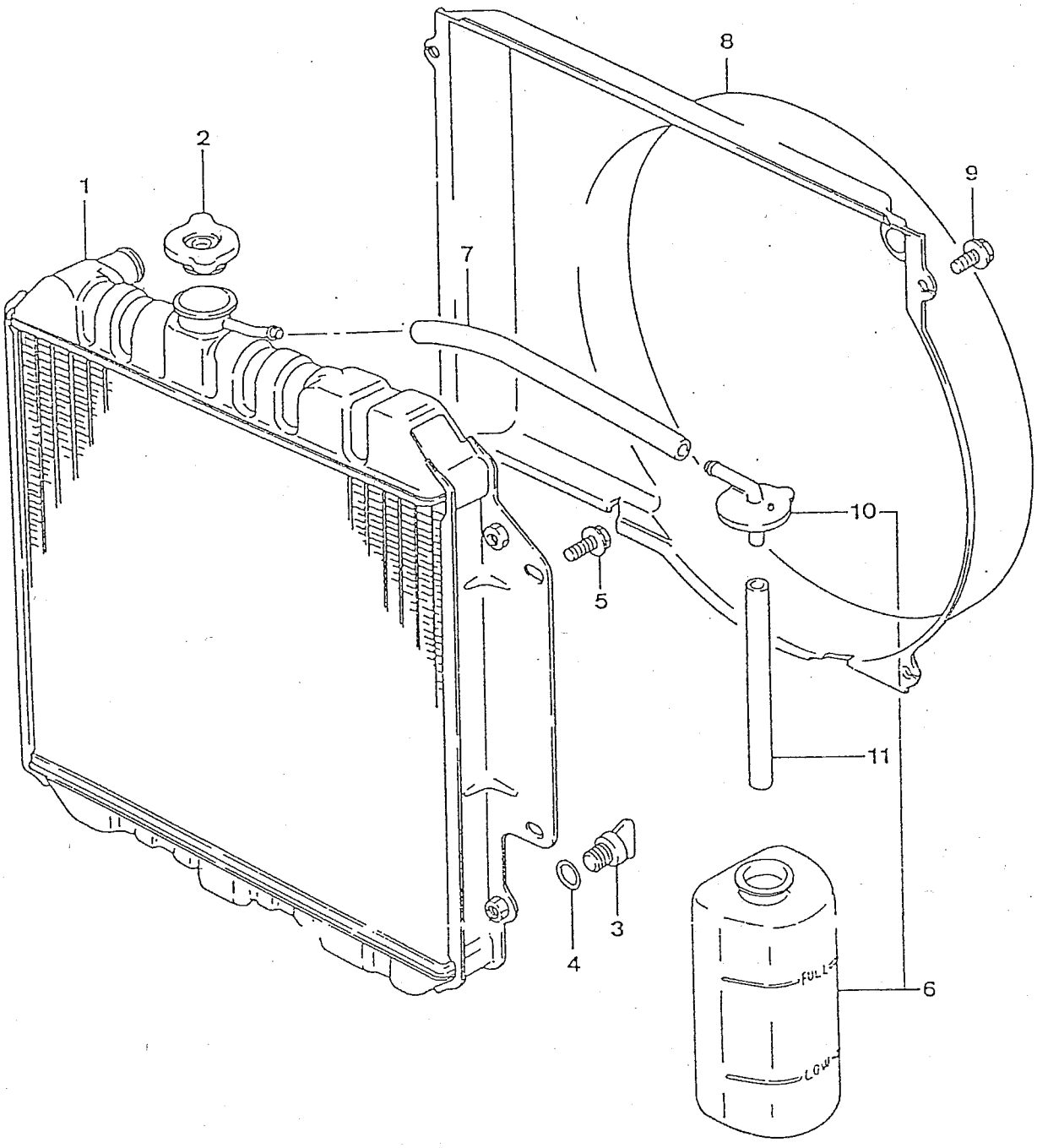

END

PUBLICACION N:A01116 GRUPO=REFRIGERACION SUBGRUPO=D-02RADIADOR
EDICION N: 1 GROUP=COOLING SUBGROUP=D-02RADIATOR
GROUPE=REFROIDISSEMENT SUBGROUPE=D-02RADIATEUR

N.FIG PLATE N.FIG	N.PIEZA PARTNUMBER N.PIECE	CAN QTY OUT	DENOMINACION	DESCRIPTION	DENOMINATION	OBSERVACIONES
1	17700A80001	1	RADIADOR	RADIATOR	RADIATEUR	
2	00000A00013	1	TAPON RADIADOR	RADIATOR PLUG	BOUCHON RADIATEUR	
3	00000A00014	1	TAPON VACIADO	DRAIN PLUG	BOUCHON VIDANGE	
4	00000A00015	1	ANILLO TAPON	PLUG RING	ANNEAU BOUCHON	
5	01514-06103	4	TORNILLO	SCREW	VIS	
	09409-07306	4	CLIP	CLIP	CLIP	
6	17930A78100	1	C/DEPOSITO AGUA	WATER TANK ASSY	ENS.RESERVOIR EAU	
7	09343-07104	1	MANGUITO, L:260	HOSE, L:260	MANCHON, L:260	
8	17761A80000	1	CAMPANA VENTILADOR	FAN PROTECTOR	PROTECTEUR VENTIL.	
9	01514-06203	2	TORNILLO	SCREW	VIS	
10	17932-78100	1	TAPON BOTELLA	BOTTLE PLUG	BOUCHON BOUTEILLE	
11	09343-07086	1	MANGUITO, L:170	HOSE, L:170	MANCHON, L:170	

FIG.18

D-03

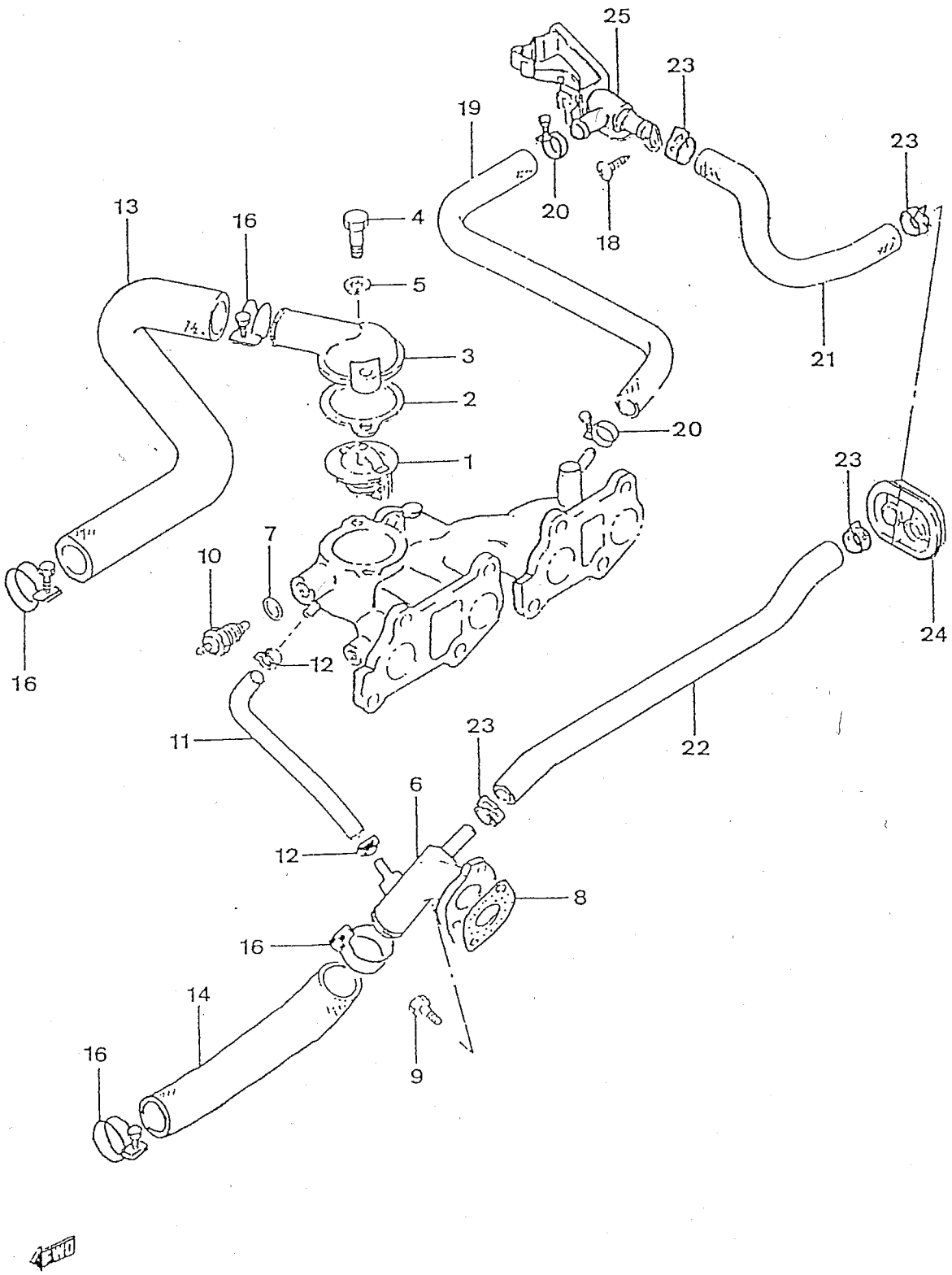

25
23
19
23
20
18
13
16
4
5
3
2
21
20
1
23
7
10
24
12
16
11
23
22
6
12
8
16
14
16
9
FWD

PUBLICACION N:A01116 GRUPO=REFRIGERACION SUBGRUPO=D-03TERMOSTATO
EDICION N: 1 GROUP=COOLING SUBGROUP=D-03THERMOSTAT
GROUPE=REFROIDISSEMENT SUBGROUPE=D-03THERMOSTAT

N.FIG PLATE N.FIG	N.PIEZA PARTNUMBER N.PIECE	CAN QTY OUT	DENOMINACION	DESCRIPTION	DENOMINATION	OBSERVACIONES
1	17570A74001	1	TERMOSTATO	THERMOSTAT	THERMOSTAT	H 122158
	17671-85C00	1	TERMOSTATO	THERMOSTAT	THERMOSTAT	D 122159
2	17569B80000	1	JUNTA	GASKET	JOINT	H 122158
3	17561-73000	1	ALOJAMIENTO TERMOST.	THERMOSTAT HOUSING	LOGEMENT THERMOSTAT	
4	01104-08303	2	TORNILLO	SCREW	VIS	
5	08321B31086	2	ARANDELA	WASHER	RONDELLE	
6	17550-80000	1	TUBO ENTRADA AGUA	WATER INLET HOSE	TUYAU ENTREE EAU	
7	09280-14004	1	ANILLO TORICO	O RING	ANNEAU TORIQUE	H 126673
8	17559-73000	1	JUNTA CODO BOMBA	ELBOW GASKET	JOINT COUDE POMPE	
9	01514-06203	2	TORNILLO	SCREW	VIS	
10	34850A65011	1	C/TERMO RESISTENCIA	THERMO RESISTANCE A/	E/THERMO RESISTANCE	H 126673
	34850A82000	1	C/TERMO RESISTENCIA	THERMO RESISTANCE A/	E/THERMO RESISTANCE	D 126674
11	17859-73000	1	MANGUITO BY-PASS	BY-PASS HOSE	TUYAU BY-PASS	
12	09401A11404	2	ABRAZADERA	CLAMP	COLLIER	
13	17841-80000	1	MANGUITO RADIADOR	RADIATOR HOSE	TUYAU RADIATEUR	
	17841A80000	1	MANGUITO RADIADOR	RADIATOR HOSE	TUYAU RADIATEUR	W/PIERBURG CARBU.
14	17851-80000	1	MANGUITO SALIDA	OUTLET HOSE	TUYAU SORTIE	
15	17852-83000	1	MANGUITO SALIDA	OUTLET HOSE	TUYAU SORTIE	
16	08005-00000	4	ABRAZADERA	CLAMP	COLLIER	
17	17860A83010	1	CODO RADIADOR	RADIATOR ELBOW	COUDE RADIATEUR	
18	03141-06126	2	TORNILLO	SCREW	VIS	
19	17871-80010	1	MANGUITO ENTRADA	INLET HOSE	TUYAU ENTREE	
20	08002-00000	2	ABRAZADERA	CLAMP	COLLIER	
21	17872-83010	1	MANGUITO CALEFACTOR	HEATER HOSE	TUYAU CHAUFFAGE	
22	17873-80010	1	MANGUITO ENTRADA CAL	HEATER INLET HOSE	TUYAU ENTREE CHAUFF.	
23	09401A20402	4	ABRAZADERA	CLAMP	COLLIER	
24	74812-83001	1	JUNTA PASO TUBOS	HOSE GROMMET	JOINT PASSAGE TUYAUX	
25	50683-00000	1	VALVULA DE AGUA	WATER VALVE	SOUPAPE EAU	

FIG.18.1

D-03.1

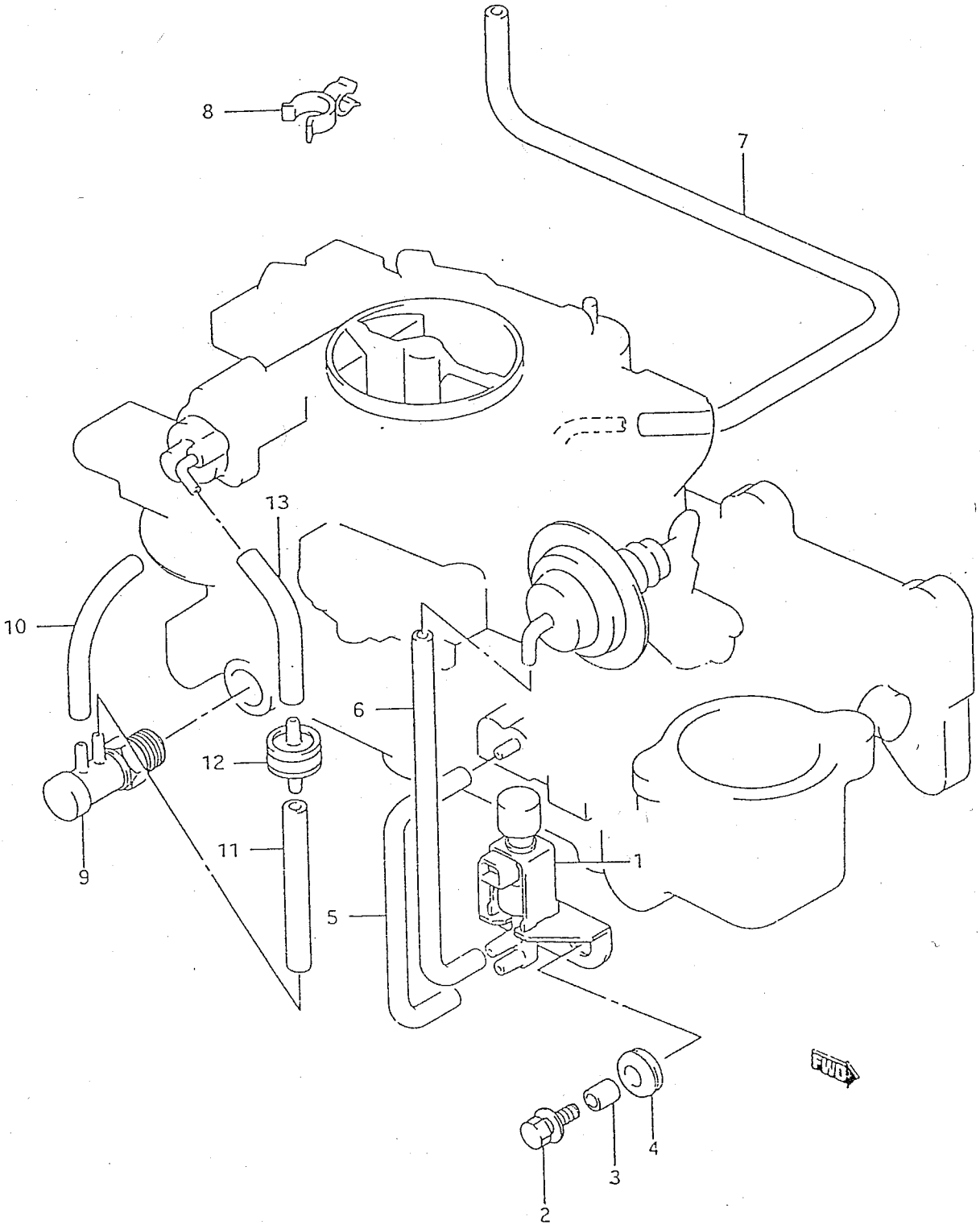

PUBLICACION N:A01116 GRUPO=REFRIGERACION SUBGRUPO=D-03.1VALVULA
EDICION N: 1 GROUP=COOLING SUBGROUP=D-03.1VALVE
GROUPE=REFROIDISSEMENT SUBGROUPE=D-03.1SOUPAPE

N.FIG PLATE N.FIG	N.PIEZA PARTNUMBER N.PIECE	CAN QTY OUT	DENOMINACION	DESCRIPTION	DENOMINATION	OBSERVACIONES
1	18550-82021	1	VALVULA SOLENOIDE	SOLENOID VALVE	SOUPAPE SOLENOIDE	
2	01107-06203	2	TORNILLO	SCREW	VIS	
	09160-06027	2	ARANDELA PLANA	FLAT WASHER	RONDELLE PLATE	
3	09180-06106	2	CASQUILLO	BUSH	BAGUE	
4	09308-10004	2	ARANDELA GOMA	RUBBER WASHER	RONDELLE CAOUTCHOUC	
5	09343-03090	1	TUBO	HOSE	TUYAU	
6	09343-03094	1	MANGUITO,SOLEN-DIAFR	HOSE,SOLENOIDE-DIAPH	TUYAU,SOLENO-DIAPHR.	
7	09343-03114	1	TUBO,DISTRIB-CARBUR.	HOSE,TIMING-CARBUR.	TUYAU,DISTRIB-CARBUR	
8	09408-00060	1	CLIP	CLIP	CLIP	
9	18123-80400	1	VALVULA TERMOSTATO	THERMOSTAT VALVE	SOUPAPE THERMOSTAT	D 104556
	18123-83000	1	VALVULA TERMOSTATO	THERMOSTAT VALVE	SOUPAPE THERMOSTAT	H 104555
10	09343-03088	1	TUBO,VALV-ADM	HOSE,VALVE-INLET	TUYAU,SOUPAPE-ADM	
11	09343-03090	1	TUBO	HOSE	TUYAU	
12	18115-83000	1	VALVULA DE RETARDO	DELAYED VALVE	SOUPAPE RETARD	H 104555
	18115-83010	1	VALVULA STARTER AUTO	AUTOM.STARTER VALVE	SOUPAPE STARTER AUTO	D 104556
13	09343-03087	1	TUBO	HOSE	TUYAU	

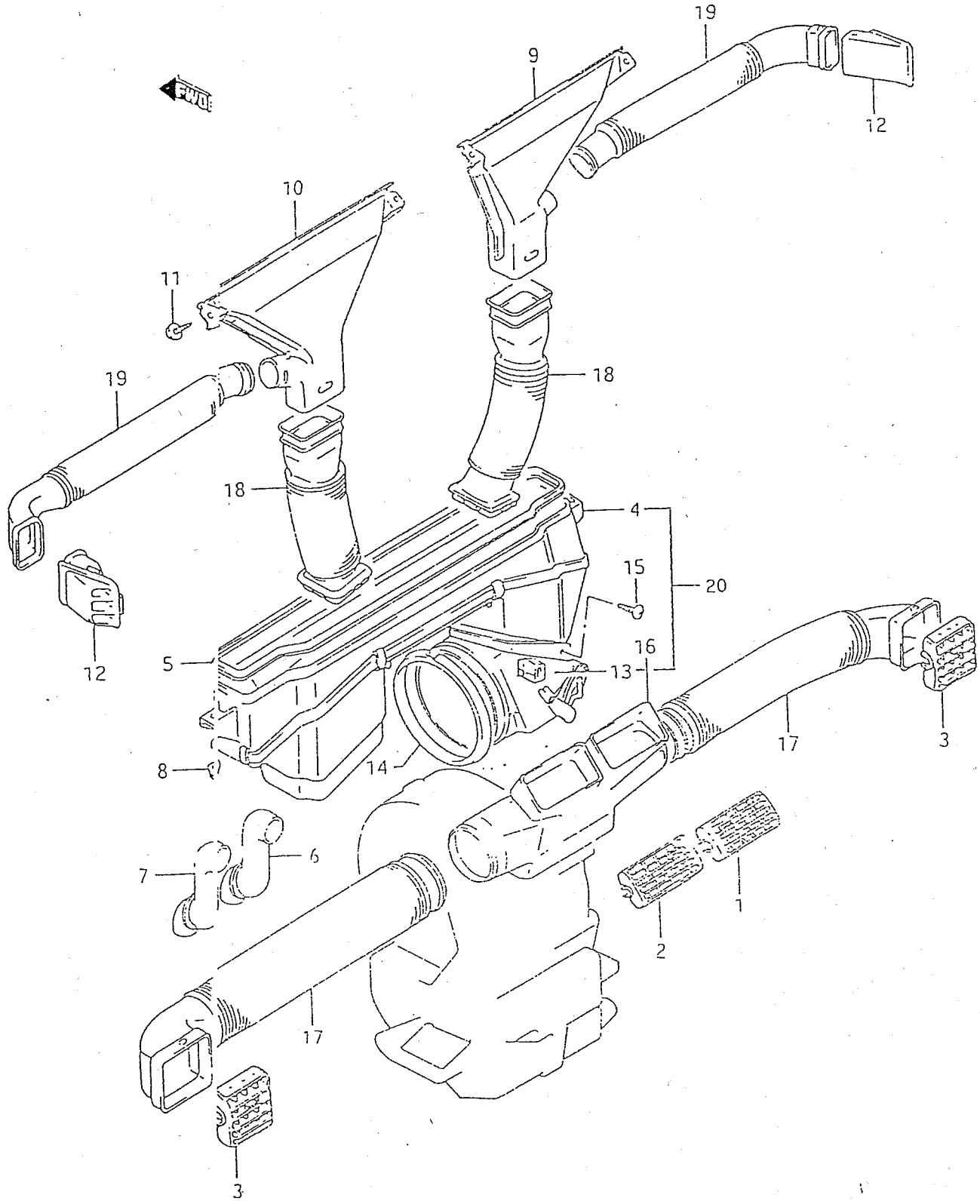
FWD
19
9
12
10
11
19
18
18
4
15
20
12
5
16
13
17
3
8
14
6
7
1
2
17
3

PUBLICACION N:A01116 GRUPO=REFRIGERACION SUBGRUPO=D-04CONDUCTO CALEFAC
EDICION N: 1 GROUP=COOLING SUBGROUP=D-04HEATING DUCT
GROUPE=REFROIDISSEMENT SUBGROUPE=D-04CONDUIT CHAUFF.

N.FIG PLATE N.FIG	N.PIEZA PARTNUMBER N.PIECE	CAN QTY OUT	DENOMINACION	DESCRIPTION	DENOMINATION	OBSERVACIONES
1	73210-70A00-5PK	1	DEFLECTOR,L/D	LOUVER,R/H	DEFLECTEUR,C/D	
2	73220-70A00-5PK	1	DEFLECTOR,L/I	LOUVER,L/H	DEFLECTEUR,C/G	
3	73230-70A00-5PK	2	DEFLECTOR LATERAL	SIDE LOUVER	DEFLECTEUR LATERAL	
4	73616-83022	1	C/CAMPANA VENT.	VENT.COVER ASSY	ENS.COUVERCLE VENTIL	
5	73613A83000	1	TIRA SELLANTE	WEATHERSTRIP	BANDE ETANCHE	
6	73641-83001	1	MANGUITO VENTIL.L/D	FAN HOSE,R/H	TUYAU VENTIL.C/D	T1
	73641-83002	1	MANGUITO VENTIL.L/D	FAN HOSE,R/H	TUYAU VENTIL.C/D	T2,T3
7	73642-83001	1	MANGUITO VENTIL.L/I	FAN HOSE,L/H	TUYAU VENTIL.C/G	T1
	73642-83002	1	MANGUITO VENTIL.L/I	FAN HOSE,L/H	TUYAU VENTIL.C/G	T2,T3
8	08316A16063	4	TUERCA	NUT	ECROU	
9	73650-83001	1	BOQUILLA,L/D	NOZZLE,R/H	PAVILLON,C/D	
10	73660-83001	1	BOQUILLA,L/I	NOZZLE,L/H	PAVILLON,C/G	
11	03541-05126	4	TORNILLO	SCREW	VIS	
12	73671-83000-5PK	2	BOQUILLA LATERAL	SIDE NOZZLE	PAVILLON LATERAL	
13	74250A83021	1	C/CONTROL CALEFACC.	HEATING CONTROL ASSY	ENS.COMMANDE CHAUFF.	
14	74259-83000	1	ARTICULACION CONTROL	CONTROL JOINT	ARTICULAT.COMMANDE	
15	03541-04106	2	TORNILLO	SCREW	VIS	
16	74611-70A00	1	CONDUCTO VENTILACION	FAN DUCT	CONDUIT VENTILATEUR	
17	74612-70A00	2	TUBO VENTILADOR LAT.	SIDE FAN HOSE	TUYAU VENTIL.LAT.	
18	74614-83000	2	TUBO DESEMPANADOR	DEFROSTER HOSE	TUYAU DEGIVRAGE	
19	74615-70A00	2	TUBO DESEMP.LAT.	SIDE DEFROSTER HOSE	TUYAU DEGIVRAGE LAT.	
20	73609-83021	1	C/CONTR.CAMP.VENTIL.	VENT.HOUS.CONTROL A/	ENS.CONTR.LOG.CHAUFF	

FIG.20

D-05

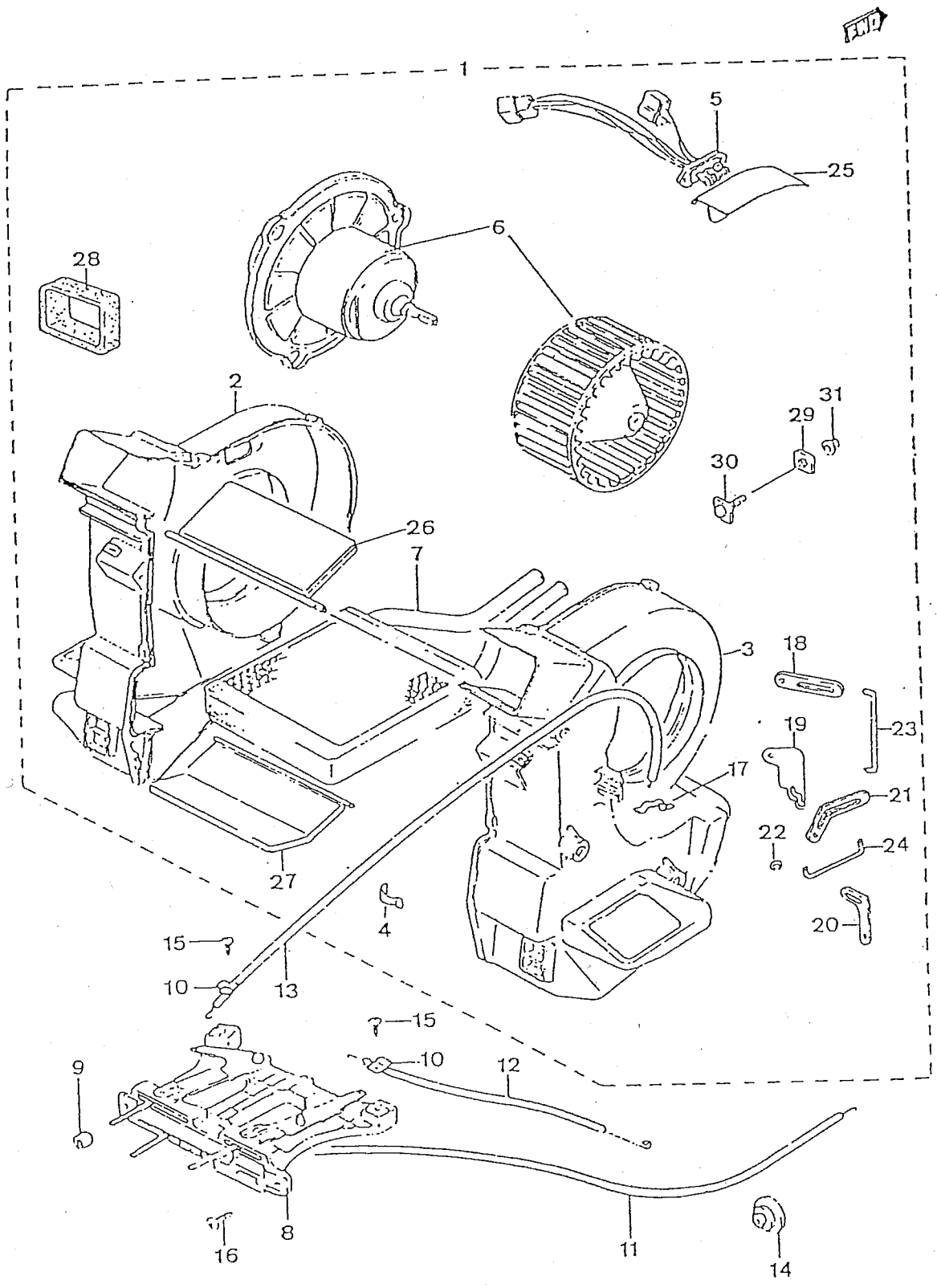
1
5
25
6
28
2
31
29
30
26
7
3
18
19
23
17
21
22
24
27
4
20
15
10
13
15
10
12
9
8
16
11
14

PUBLICACION N:A01116 GRUPO=REFRIGERACION SUBGRUPO=D-05CALEFACTOR
EDICION N: 1 GROUP=COOLING SUBGROUP=D-05HEATER
GROUPE=REFROIDISSEMENT SUBGROUPE=D-05CHAUFFAGE

N.FIG PLATE N.FIG	N.PIEZA PARTNUMBER N.PIECE	CAN QTY OUT	DENOMINACION	DESCRIPTION	DENOMINATION	OBSERVACIONES
1	74100A70A20	1	C/CALEFACTOR	HEATER ASSY	ENS.CHAUFFAGE	H 121456
	74100B70A20	1	C/CALEFACTOR	HEATER ASSY	ENS.CHAUFFAGE	D 121457
2	00000A00989	1	C/SEMI-CAJA,L/I	SEMI-BOX ASSY,L/H	ENS.DEMI-BOITE,C/G	
3	00000A00995	1	C/SEMI-CAJA,L/D	SEMI-BOX ASSY,R/H	ENS.DEMI-BOITE,C/D	
4	00000A00564	7	GRAPA CIERRE	LOCK CLAMP	COLLIER FERMETURE	
5	00000A00382	1	RESISTENCIA	RESISTANCE	RESISTANCE	T1,T2
	00000A01004	1	RESISTENCIA	RESISTANCE	RESISTANCE	T3
6	00000A00992	1	GRUPO VENTILADOR	FAN GROUP	GROUPE VENTILATEUR	
7	00000A00993	1	CALEFACTOR	HEATER	CHAUFFAGE	
8	74400A70A00	1	C/PALANCA CONTROL	CONTROL LEVER ASSY	ENS.LEVIER CONTROLE	
9	00000A00386	4	POMO PALANCA	LEVER KNOB	BOUTON LEVIER	
10	00000A00387	3	GRAPA	CLAMP	COLLIER	
11	74512-83020	1	CABLE CONTROL VALV.	VALVE CONTROL CABLE	CABLE CONTROL.LEVIER	
12	74513-70A20	1	CABLE AIRE	AIR CABLE	CABLE AIR	
13	74514A83000	1	CABLE CONTROL HABITA	ROOM CONTROL CABLE	CABLE CONTROLE HABIT	
14	82191A80002	1	PASACABLES	GROMMET	PASSE-CABLES	
15	00000A00388	3	TORNILLO	SCREW	VIS	
16	03541-04126	2	TORNILLO	SCREW	VIS	
17	00000A00461	1	CLIP CABLE MANDO	CONTROL CABLE CLIP	CLIP CONTROLE COMM.	
18	00000A00997	1	PALANCA MANDO AIREAC	VENTIL.CONTR.LEVER	LEVIER COMM.AERATION	
19	00000A00998	1	PALANCA INTERMEDIA	INTERMEDIATE LEVER	LEVIER INTERMEDIAIRE	
20	00000A00999	1	PALANCA DISTRIB.AIRE	AIR DISTRIB.LEVER	LEVIER DISTRIB.AIR	
21	00000A01000	1	CASQUILLO GUIA	GUIDE BUSH	BAGUE GUIDE	
22	00000A01001	4	CLIP VARILLA	ROD CLIP	CLIP TIGE	
23	00000A01002	1	VARILLA TRANSMISION	TRANSMISSION ROD	TIGE TRANSMISSION	
24	00000A01003	1	VARILLA TRANSMISION	TRANSMISSION ROD	TIGE TRANSMISSION	
25	00000A00990	1	SOPORTE RESISTENCIA	RESISTANCE BRACKET	SUPPORT RESISTANCE	
26	00000A00991	1	C/TRAMPILLA AIREAC.	VENTIL.VALVE ASSY	ENS.CLAPET AERATION	
27	00000A00653	1	C/TRAMPILLA DISTRIB.	DISTRIB.VALVE ASSY	ENS.CLAPET DISTRIB.	
28	00000A00994	1	GUARNIC.CONDUCT.AIRE	AIR DUCT GARNISH	ENJOLIV.CONDUIT AIR	
29	74172-80000	1	FORRO CALEFACTOR	HEATER PAD	COUSSINET CHAUFFAGE	
30	01514-06166	2	TORNILLO	SCREW	VIS	
31	08316A16083	1	TUERCA	NUT	ECROU	

GRUPO 04 EMBRAGUE

GROUP 04 CLUTCH

GROUP 04 EMBRAYAGE

COMPOSICION.....COMPOSITION.....COMPOSICION

REFERENCIA PARTNUMBER NUM.PIECE	DENOMINACION	DESCRIPTION	DENOMINATION
404021	E-02CABLE MANDO	E-02CONTROL CABLE	E-02CABLE CONTROLE
404022	E-03EMBRAGUE	E-03CLUTCH	E-03EMBRAYAGE
404023	E-04ENGRANAJE CAJA	E-04GEARBOX GEAR	E-04ENGRENAGE BOITE
404023.1	E-04.1ENGRANAJE CAJA	E-04.1GEARBOX GEAR	E-04.1ENGRENAGE BOIT
404024	E-05CARTER CAJA CAMB	E-05GEARBOX CASE	E-05CARTER BOITE VIT
404025	E-06HORQUILLA SELEC.	E-06SELECTING FORK	E-06FOURCHETTE SELEC
404026	E-07PALANCA CAMBIO	E-07GEARBOX LEVER	E-07LEVIER BOITE VIT
404027	E-08ENGRANAJE TRANSF	E-08TRANSFER GEAR	E-08ENGRENAGE TRANSF
404027.1	E-08.1ENGRAN.TRANSF.	E-08.1TRANSFER GEAR	E-08.1ENGREN.TRANSF.
404028	E-09CARTER TRANSF.	E-09TRANSFER CASE	E-09CARTER TRANSFERT
404028.1	E-09.1CARTER TRANSF.	E-09.1TRANSF.CASE	E-09.1CARTER TRANSF.
404029	E-10PALANCA TRANSF.	E-10TRANSFER LEVER	E-10LEVIER TRANSFERT
404030	E-11PEDALES	E-11PEDALS	E-11PEDALES

FIG.21

E-02

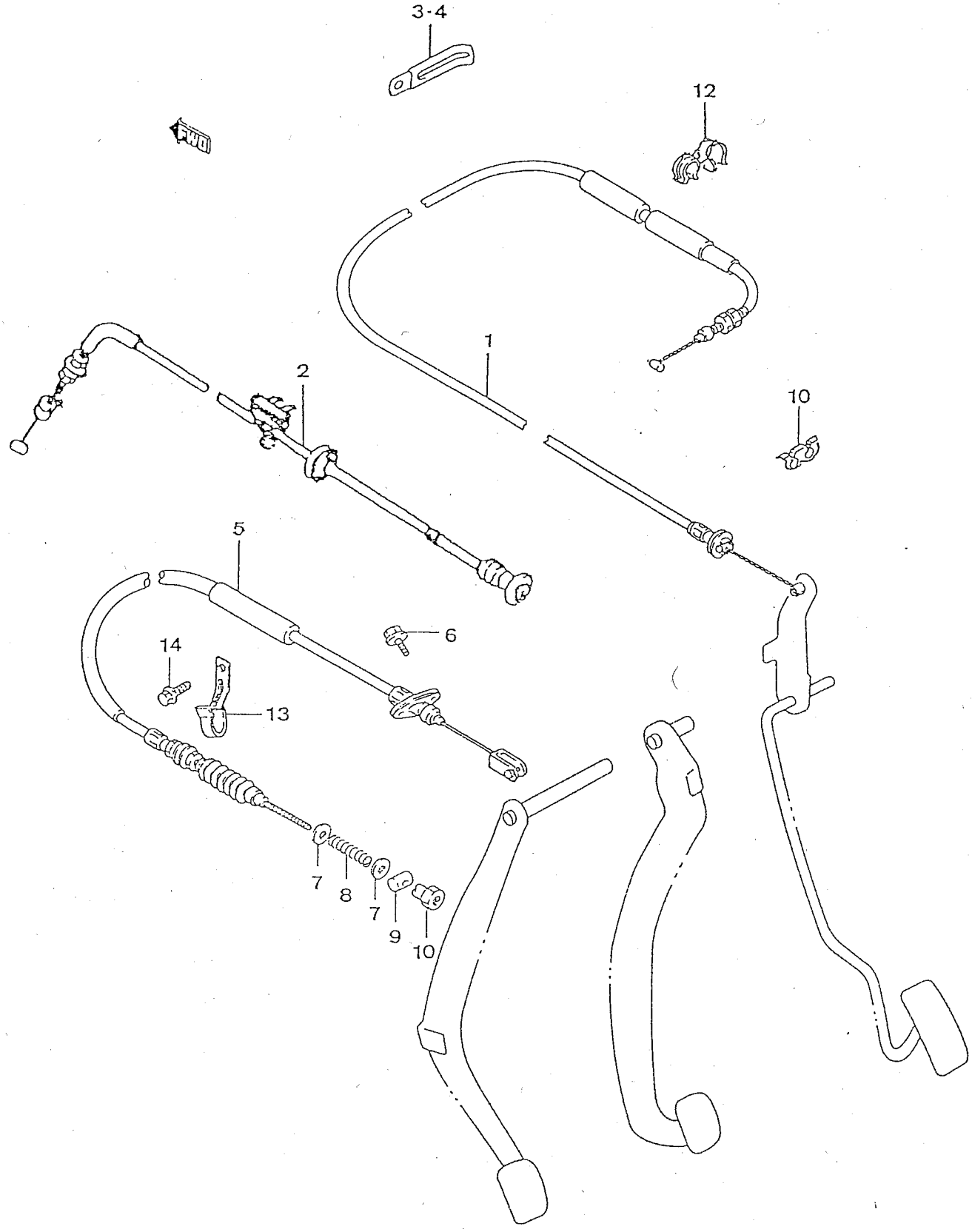

PUBLICACION N:A01116 GRUPO=EMBRAGUE SUBGRUPO=E-02CABLE MANDO
EDICION N: 1 GROUP=CLUTCH SUBGROUP=E-02CONTROL CABLE
GROUPE=EMBRAYAGE SUBGROUPE=E-02CABLE CONTROLE

N.FIG PLATE N.FIG	N.PIEZA PARTNUMBER N.PIECE	CAN QTY OUT	DENOMINACION	DESCRIPTION	DENOMINATION	OBSERVACIONES
1	15910A80011	1	C/CABLE ACELERADOR	ACCELERATOR CABLE	ENS.CABLE ACCELERAT.	
	15910B80001	1	C/CABLE ACELERADOR	ACCELERATOR CABLE	ENS.CABLE ACCELERAT.	E02
	15910B80011	1	C/CABLE ACELERADOR	ACCELERATOR CABLE	ENS.CABLE ACCELERAT.	'PLAYA'
2	15930B80420	1	C/CABLE STARTER	STARTER CABLE ASSY	ENS.CABLE STARTER	E02
	15930D80090	1	C/CABLE STARTER	STARTER CABLE ASSY	ENS.CABLE STARTER	
	15930E80090	1	C/CABLE STARTER	STARTER CABLE ASSY	ENS.CABLE STARTER	'PLAYA'
3	09404A06402	2	ABRAZADERA	CLAMP	COLLIER	
4	09407A12402	1	CLIP CABLEADO	WIRING CLIP	CLIP FAISCEAU	
5	23710A80410	1	C/CABLE EMBRAGUE	CLUTCH CABLE ASSY	ENS.CABLE EMBRAYAGE	E02
	23710A80420	1	C/CABLE EMBRAGUE	CLUTCH CABLE ASSY	ENS.CABLE EMBRAYAGE	
6	01514-06163	2	TORNILLO	SCREW	VIS	
7	08322-21063	1	ARANDELA PLANA	FLAT WASHER	RONDELLE PLATE	
8	09440-08026	1	MUELLE	SPRING	RESSORT	
9	09209-13018	1	BULON	PIN	BOULON	
10	09150-06010	1	TUERCA	NUT	ECROU	
11	09408A00118	1	CLIP DOBLE	DOUBLE CLIP	CLIP DOUBLE	
12	08007-00000	1	CLIP DOBLE	DOUBLE CLIP	CLIP DOUBLE	
13	09404A06415	1	BRIDA	FLANGE	BRIDE	T2,T3
14	01514-06103	1	TORNILLO	SCREW	VIS	T2,T3

FIG.22

E-03

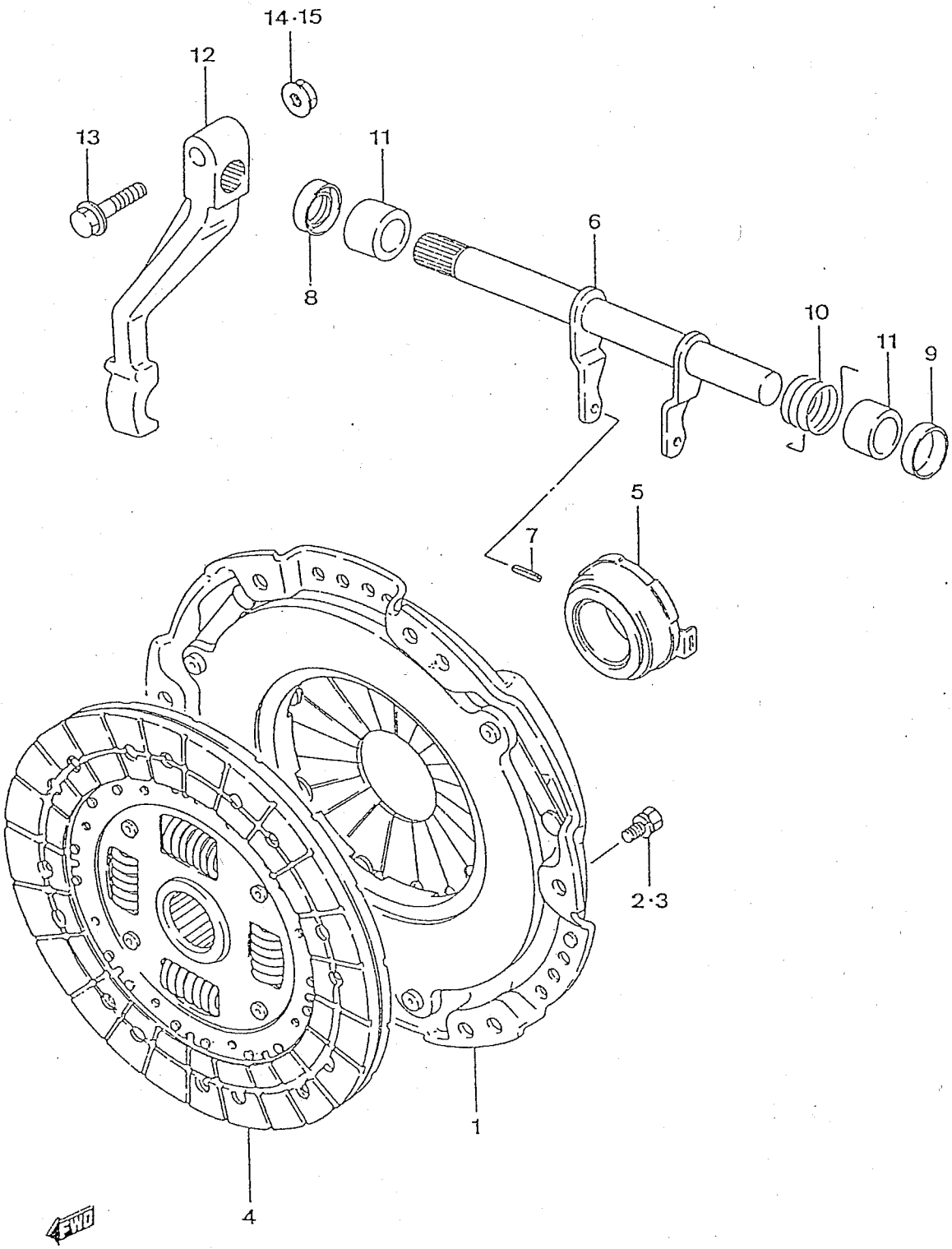

PUBLICACION N:A01116 GRUPO=EMBRAGUE SUBGRUPO=E-03EMBRAGUE
EDICION N: 1 GROUP=CLUTCH SUBGROUP=E-03CLUTCH
GROUPE=EMBRAYAGE SUBGROUPE=E-03EMBRAYAGE

N.FIG PLATE N.FIG	N.PIEZA PARTNUMBER N.PIECE	CAN QTY OUT	DENOMINACION	DESCRIPTION	DENOMINATION	OBSERVACIONES
1	22100B80020	1	PLATO DE EMBRAGUE	CLUTCH PLATE	PLATEAU EMBRAYAGE	
2	01108A07166	6	TORNILLO	SCREW	VIS	
3	08321A21076	6	ARANDELA GROWER	GROWER WASHER	RONDELLE GROWER	
4	22400C80020	1	DISCO DE EMBRAGUE	CLUTCH DISC	DISQUE EMBRAYAGE	
5	09269B33001	1	RODAMIENTO EMPUJE	THRUST BEARING	ROULEMENT D'APPUI	
	09269C33001	1	RODAMIENTO EMPUJE	THRUST BEARING	ROULEMENT D'APPUI	ALTERN.
6	23260-83003	1	EJE EMBRAGUE	CLUTCH SHAFT	AXE EMBRAYAGE	
7	09205-03019	1	PASADOR	PIN	CLAVETTE	
8	09284-14003	1	RETEN	SEAL	ARRETOIR	
9	09241-22003	1	TAPON	PLUG	BOUCHON	
10	09448-20006	1	MUELLE	SPRING	RESSORT	
11	09300-14012	2	CASQUILLO	BUSH	BAGUE	
12	23266-80400	1	PALANCA DESEMBRAGUE	CLUTCH RELEASE LEVER	LEVIER DEBRAYAGE	
13	01514-08353	1	TORNILLO	SCREW	VIS	
14	08322-11083	1	ARANDELA	WASHER	RONDELLE	
15	08310-11083	1	TUERCA	NUT	ECROU	

FIG.23

E-04

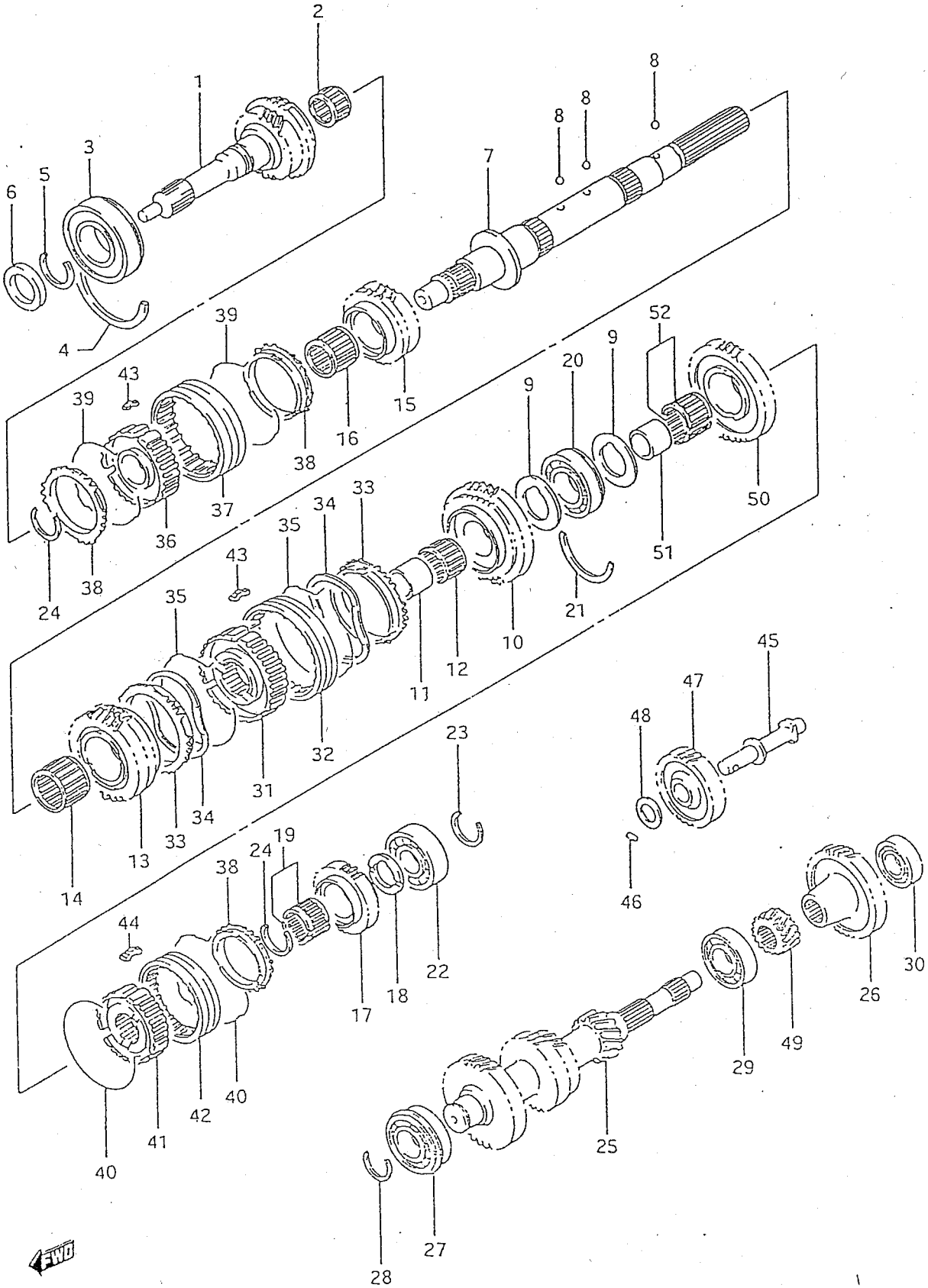

1
2
3
4
5
6
7
8
8
8
9
9
10
11
12
13
14
15
16
17
18
19
20
21
22
23
24
24
25
26
27
28
29
30
31
32
33
33
34
34
35
35
36
37
38
38
38
39
39
40
40
41
42
43
43
44
45
46
47
48
49
50
51
52
FWD

PUBLICACION N:A01116 GRUPO=EMBRAGUE SUBGRUPO=E-04ENGRANAJE CAJA
EDICION N: 1 GROUP=CLUTCH SUBGROUP=E-04GEARBOX GEAR
GROUPE=EMBRAYAGE SUBGROUPE=E-04ENGRENAGE BOITE

N.FIG PLATE N.FIG	N.PIEZA PARTNUMBER N.PIECE	CAN QTY OUT	DENOMINACION	DESCRIPTION	DENOMINATION	OBSERVACIONES
1	24110A80401	1	EJE PRIMARIO	PRIMARY SHAFT	AXE PRIMAIRE	
2	09263-20056	1	RODAMIENTO	BEARING	ROULEMENT	
3	09262-28005	1	RODAMIENTO	BEARING	ROULEMENT	
4	09390-68002	1	CIRCLIP	CIRCLIP	CIRCLIP	
5	09380-28007	1	CIRCLIP	CIRCLIP	CIRCLIP	
6	09283-25077	1	RETEN	SEAL	ARRETOIR	
7	24121-83002	1	EJE PRINCIPAL	MAIN AXLE	AXE PRINCIPAL	
8	06111-06004	3	BOLA	BALL	BILLE	
9	09166-30007	2	ARANDELA	WASHER	RONDELLE	
10	24210A80401	1	ENGRANAJE EJE PRINC.	MAIN PRIMARY SHAFT	ENGRENAGE AXE PRINC.	
11	09300-30003	1	CASQUILLO	BUSH	BAGUE	
12	09263-35015	1	RODAMIENTO	BEARING	ROULEMENT	
13	24220A83000	1	ENGRANAJE PRINC.2	MAIN GEAR,2	ENGRENAGE PRINC.2	
14	09263-35015	1	RODAMIENTO	BEARING	ROULEMENT	
15	24230A83000	1	ENGRANAJE PRINC.3	MAIN GEAR,3	ENGRENAGE PRINC.3	
16	09263-30031	1	RODAMIENTO	BEARING	ROULEMENT	
17	24250B83000	1	ENGRANAJE PRINC.5	MAIN GEAR,5	ENGRENAGE PRINC.5	
18	09166-25009	1	ARANDELA	WASHER	RONDELLE	
	24255-60A00	1	ARANDELA	WASHER	RONDELLE	ALTERN.
19	09263-27007	1	RODAMIENTO	BEARING	ROULEMENT	
20	09262-30072	1	RODAMIENTO	BEARING	ROULEMENT	
21	09390-62010	1	CIRCLIP	CIRCLIP	CIRCLIP	
22	08113-63050	1	RODAMIENTO	BEARING	ROULEMENT	
23	09380-25011	1	CIRCLIP	CIRCLIP	CIRCLIP	
24	09380-28007	2	CIRCLIP	CIRCLIP	CIRCLIP	
25	24131-80420	1	EJE SECUNDARIO	SECONDARY SHAFT	AXE SECONDAIRE	
26	24351A83000	1	ENGRANAJE EJE,5	SEAFT GEAR,5	ENGRENAGE AXE,5	
27	09262-28018	1	RODAMIENTO DEL.	FRONT BEARING	ROULEMENT AVANT	T2,T3
	09262-28019	1	RODAMIENTO DEL.	FRONT BEARING	ROULEMENT AVANT	T1
28	09380-28007	1	CIRCLIP	CIRCLIP	CIRCLIP	
29	09262-28020	1	RODAMIENTO CENTRAL	CENTRAL BEARING	ROULEMENT CENTRAL	

FIG.23.1

E-04.1

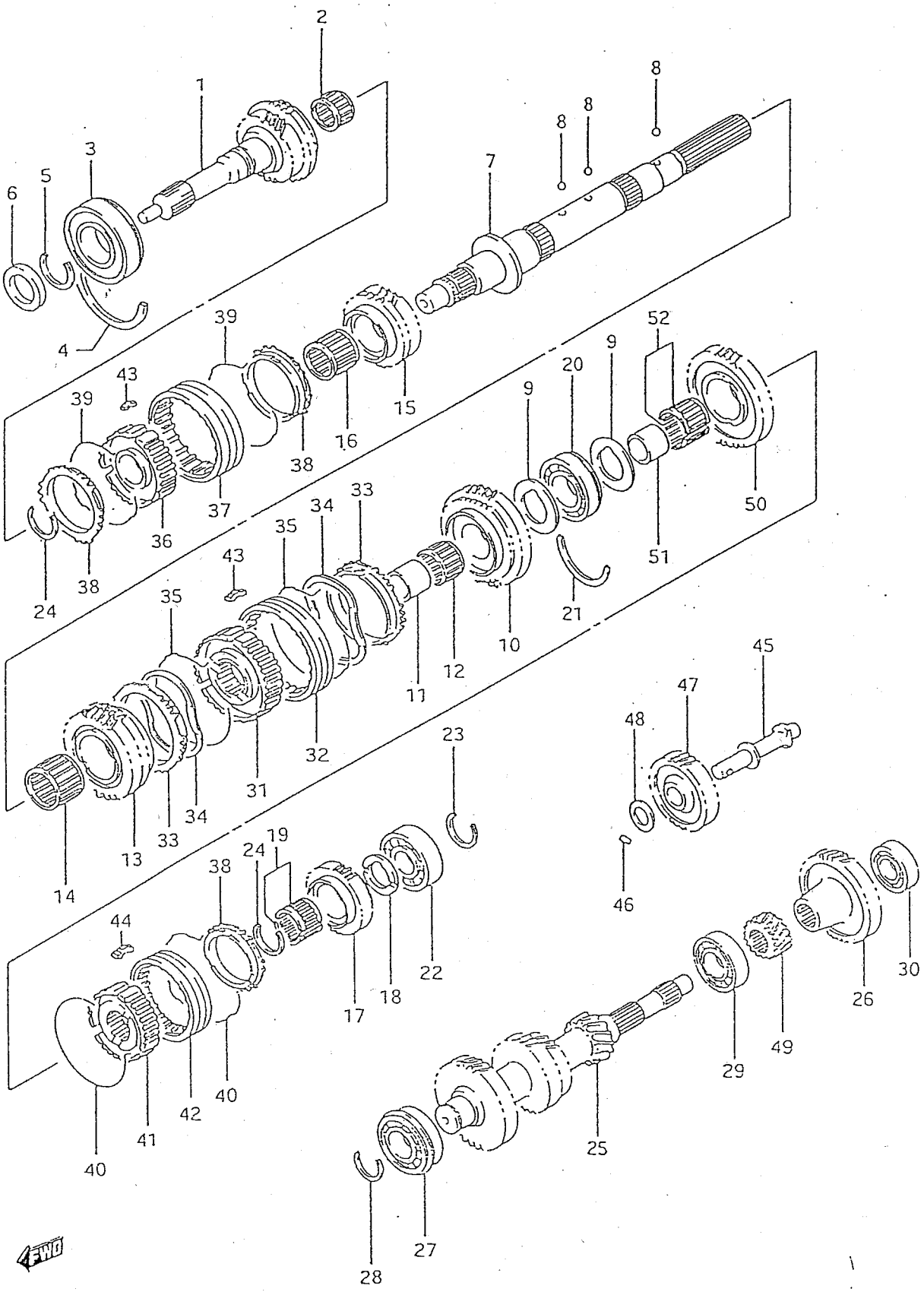
1
2
3
4
5
6
7
8
8
8
8
9
9
10
11
12
13
14
15
16
17
18
19
20
21
22
23
24
24
25
26
27
28
29
30
31
32
33
33
34
34
35
35
36
37
38
38
39
39
40
40
41
42
43
43
44
45
46
47
48
49
50
51
52
4FWD

PUBLICACION N:A01116 GRUPO=EMBRAGUE SUBGRUPO=E-08ENGRANAJE TRANSF
EDICION N: 1 GROUP=CLUTCH SUBGROUP=E-08TRANSFER GEAR
GROUPE=EMBRAYAGE SUBGROUPE=E-08ENGRENAGE TRANSF

N.FIG PLATE N.FIG	N.PIEZA PARTNUMBER N.PIECE	CAN QTY OUT	DENOMINACION	DESCRIPTION	DENOMINATION	OBSERVACIONES
1	29111-80450	1	EJE ENTRADA	INLET SHAFT	AXE ENTREE	
2	29981-80050	1	RODAMIENTO DELANTERO	FRONT BEARING	ROULEMENT AVANT	T1,T2
	29981-80051	1	RODAMIENTO DELANTERO	FRONT BEARING	ROULEMENT AVANT	T3
3	29992-80050	1	CIRCLIP	CIRCLIP	CIRCLIP	
4	29982-80050	1	RODAMIENTO TRASERO	REAR BEARING	ROULEMENT ARRIERE	T1,T2
	29982-80051	1	RODAMIENTO TRASERO	REAR BEARING	ROULEMENT ARRIERE	T3
5	29117-80050	2	SUPLEMENTO, 0,1	SHIM, 0,1	SUPPLEMENT, 0,1	
	29118-80050	2	SUPLEMENTO, 0,3	SHIM, 0,3	SUPPLEMENT, 0,3	
	29119-80050	1	SUPLEMENTO, 0,5	SHIM, 0,5	SUPPLEMENT, 0,5	
6	29971-83050	1	RETEN	SEAL	ARRETOIR	
7	27110-83050	1	BRIDA	CLAMP	COLLIER	
8	29951-83050	1	TUERCA	NUT	ECROU	
9	29121-80050	1	ENGRANAJE INTERM.	INTERMEDIATE GEAR	ENGRENAGE INTERM.	
10	29131-80050	1	EJE INTERMEDIO	INTERMEDIATE SHAFT	AXE INTERMEDIAIRE	
11	29983-80050	2	RODAMIENTO	BEARING	ROULEMENT	
12	29962-80050	1	CASQUILLO	BUSH	BAGUE	
13	29956A80050	2	ARANDELA	WASHER	RONDELLE	
14	29975-80050	1	ANILLO TORICO	O RING	ANNEAU TORIQUE	
15	29136-80050	1	PLACA	PLATE	PLAQUE	
16	01104-08163	1	TORNILLO	SCREW	VIS	
	08321B31086	1	ARANDELA	WASHER	RONDELLE	
17	29141-80050	1	EJE TRASERO	REAR SHAFT	AXE ARRIERE	
18	29986-80050	1	RODAMIENTO	BEARING	ROULEMENT	
19	29211-80050	1	ENGRANAJE DE BAJA	LOW SPEED GEAR	ENGRENAGE PETITE VIT	
20	29984-80050	1	RODAMIENTO	BEARING	ROULEMENT	
21	29221-80050	1	ENGRANAJE DE ALTA	HIGH SPEED GEAR	ENGRENAGE GRANDE VIT	
22	29985-80050	1	RODAMIENTO	BEARING	ROULEMENT	
23	29959-80050	2	ARANDELA	WASHER	RONDELLE	
24	29241-80050	1	MANGUITO DESPLAZABLE	MOVEABLE HOSE	TUYAU DEPLACABLE	
25	08173-63060	1	RODAMIENTO DELANTERO	FRONT BEARING	ROULEMENT AVANT	T1,T2
	29987-80050	1	RODAMIENTO DELANTERO	FRONT BEARING	ROULEMENT AVANT	T3
26	29231-80050	1	MANGUITO DE ARRASTRE	PULLING HOSE	TUYAU D'ENTRAINEMENT	
27	29241-80050	1	MANGUITO DESPLAZABLE	MOVEABLE HOSE	TUYAU DEPLACABLE	

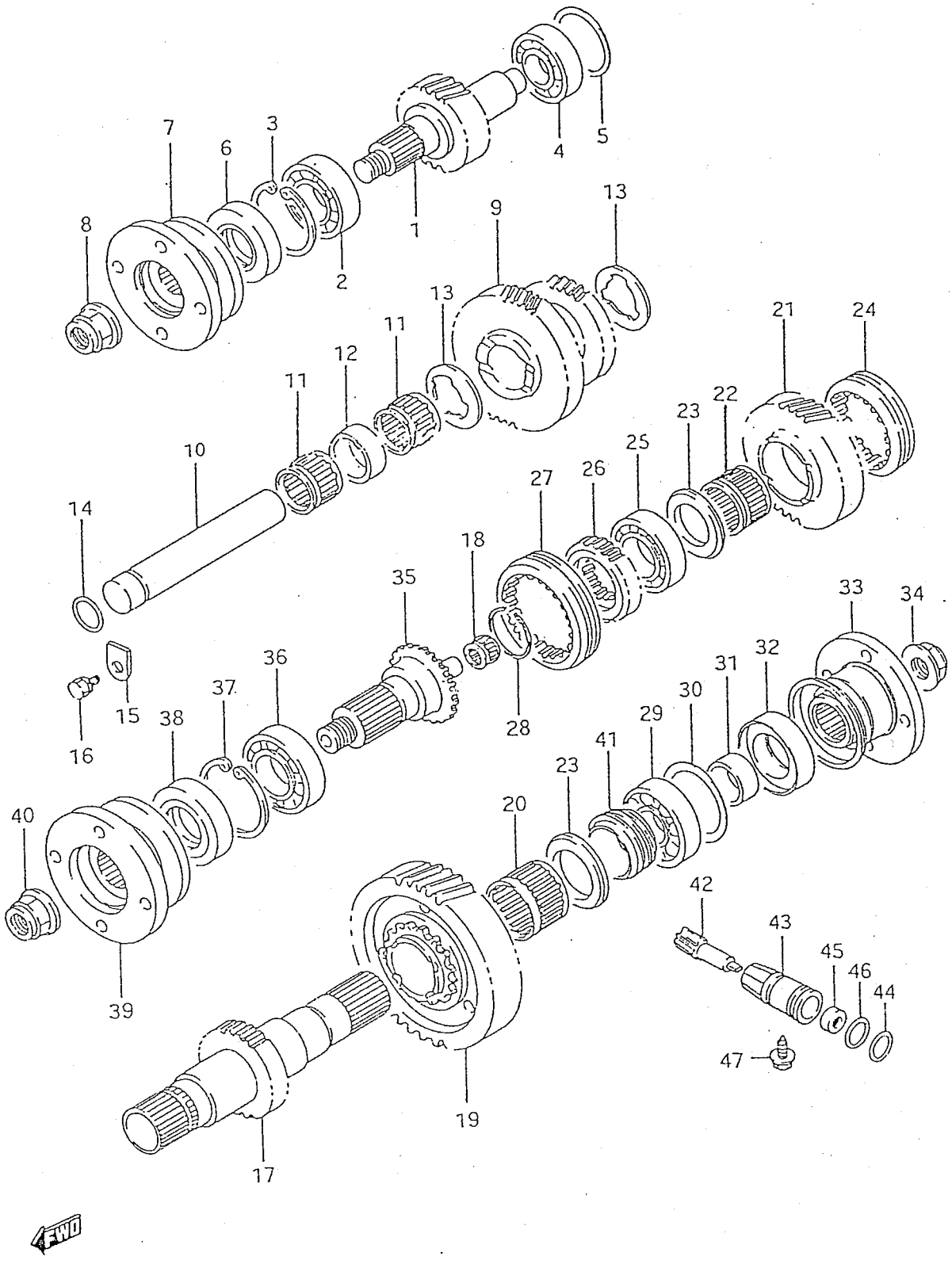
1
2
3
4
5
6
7
8
9
10
11
12
13
14
15
16
17
18
19
20
21
22
23
24
25
26
27
28
29
30
31
32
33
34
35
36
37
38
39
40
41
42
43
44
45
46
47
4WD

PUBLICACION N:A01116 GRUPO=EMBRAGUE SUBGRUPO=E-07PALANCA CAMBIO
EDICION N: 1 GROUP=CLUTCH SUBGROUP=E-07GEARBOX LEVER
GROUPE=EMBRAYAGE SUBGROUPE=E-07LEVIER BOITE VIT

N.FIG PLATE N.FIG	N.PIEZA PARTNUMBER N.PIECE	CAN QTY OUT	DENOMINACION	DESCRIPTION	DENOMINATION	OBSERVACIONES
1	25121-83001	1	CAJA CONTROL PALANCA	LEVER CONTROL BOX	BOITE CONTROL.LEVIER	
2	01514-08203	4	TORNILLO	SCREW	VIS	
3	25341-69002	1	EJE GUIA	GUIDE SHAFT	GUIDE AXE	
4	25342-69002	1	EJE GUIA M.A	REVERSE GUIDE SHAFT	AXE GUIDE M.A.	
5	09440-11005	2	MUELLE SELECTOR	SELECTOR SPRING	RESSORT SELECTEUR	
6	06112-10004	1	BOLA	BALL	BILLE	
7	09440-04019	1	MUELLE INTERIOR	INNER SPRING	RESSORT INTERIEUR	
8	09440-07005	1	MUELLE EXTERIOR	OUTER SPRING	RESSORT EXTERIEUR	
9	09198-10001	1	TORNILLO M.A.	REVERSE SCREW	VIS M.A.	
10	09128-06032	1	TORNILLO BAJA VELOCI	LOW SPEED SCREW	VIS PETITE VITESSE	
11	09241-08003	2	TAPON	PLUG	BOUCHON	
12	09135-08006	1	TORNILLO FIJ.PALANCA	LEVER FIXING SCREW	VIS FIXATION LEVIER	
13	08321B31086	1	ARANDELA	WASHER	RONDELLE	
14	25125A80001	1	TAPA PALANCA	LEVER COVER	COUVERCLE LEVIER	
15	01514-06163	3	TORNILLO	SCREW	VIS	
16	28101A83010	1	PALANCA CONTROL	CONTROL LEVER	LEVIER DE CONTROLE	T1
	28101B83010	1	PALANCA CONTROL	CONTROL LEVER	LEVIER DE CONTROLE	T2,T3
17	28113-83010	1	BOLA PALANCA	LEVER BALL	BOULE LEVIER	T1
18	28113-83020	1	BOLA PALANCA	LEVER BALL	BILLE LEVIER	T2,T3
19	28135-80000	1	GUARDAPOLVOS	BOOT	PARE-POUSSIERES	
20	28136-83000	1	GUARDAPOLVOS	BOOT	PARE-POUSSIERES	
21	09164A24003	1	ARANDELA	WASHER	RONDELLE	
22	28137-83000	1	TAPA GUARDAPOLVOS	BOOT COVER	COUVERCLE PARE-POUSS	
23	01514-06123	4	TORNILLO	SCREW	VIS	

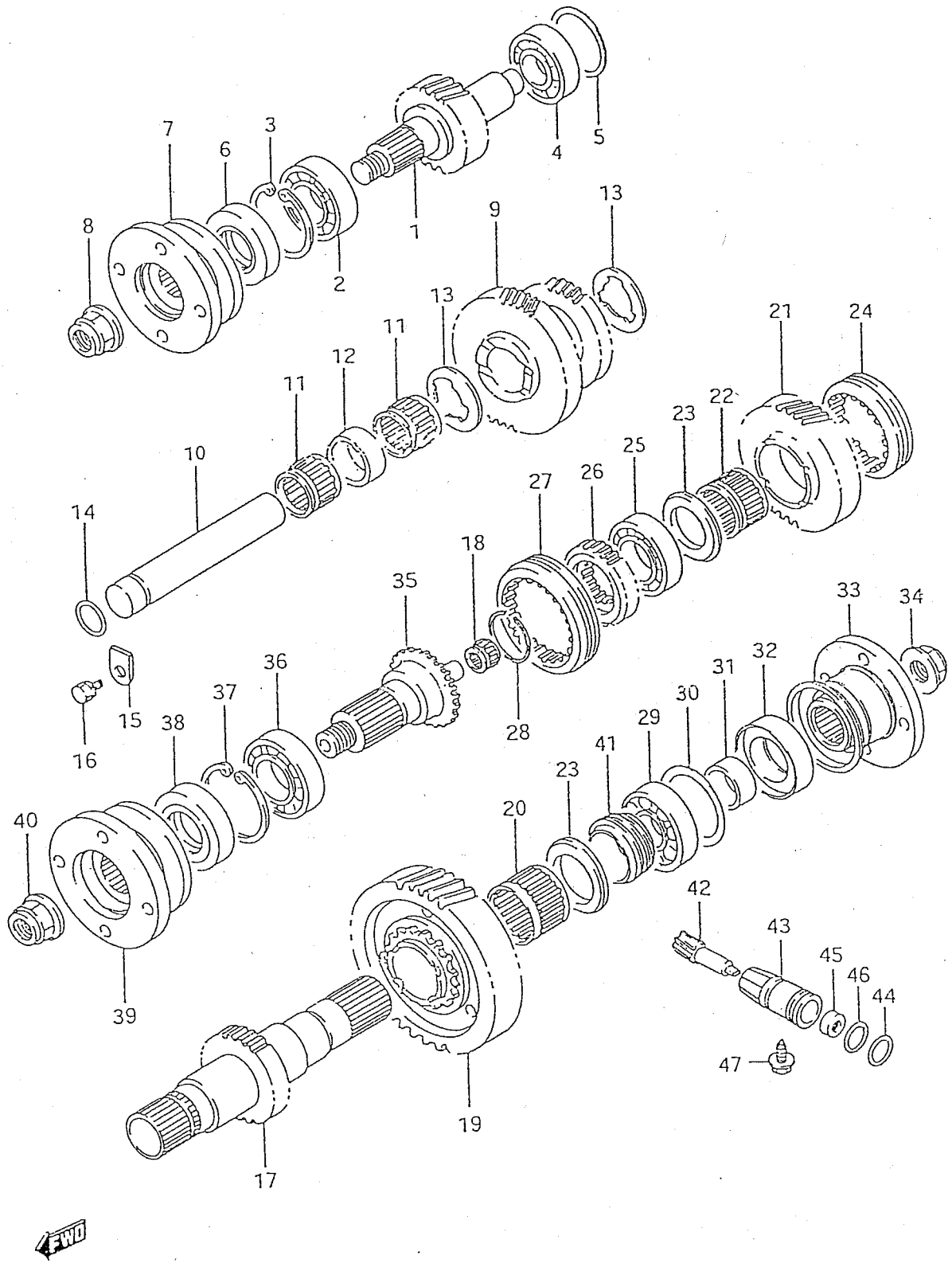
1
2
3
4
5
6
7
8
9
10
11
12
13
14
15
16
17
18
19
20
21
22
23
24
25
26
27
28
29
30
31
32
33
34
35
36
37
38
39
40
41
42
43
44
45
46
47
4WD

PUBLICACION N:A01116 GRUPO=EMBRAGUE SUBGRUPO=E-06HORQUILLA SELEC.
EDICION N: 1 GROUP=CLUTCH SUBGROUP=E-06SELECTING FORK
GROUPE=EMBRAYAGE SUBGROUPE=E-06FOURCHETTE SELEC

N.FIG PLATE N.FIG	N.PIEZA PARTNUMBER N.PIECE	CAN QTY OUT	DENOMINACION	DESCRIPTION	DENOMINATION	OBSERVACIONES
1	25211-83002	1	HORQUILLA,1 Y 2	YOKE,1 AND 2	FOURCHETTE,1 ET 2	
2	25221-83002	2	HORQUILLA,3 Y 4	YOKE,3 AND 4	FOURCHETTE,3 ET 4	
3	25411-80401	1	EJE HORQUILLA BAJA	LOW SPEED YOKE SHAFT	AXE FOURCHETTE P.V.	
4	25420-80401	1	EJE HORQUILLA ALTA	HIGH SPEE.YOKE SHAFT	AXE FOURCHETTE G.V.	
5	25451-80421	1	EJE HORQUILLA M.A.	REVERSE YOKE SHAFT	AXE FOURCHETTE M.A.	T1,T2
	25451A80421	1	EJE HORQUILLA M.A.	REVERSE YOKE SHAFT	AXE FOURCHETTE M.A.	T3
6	25241-83001	1	CABEZA SELECT.BAJA	LOW SPEED SELEC.HEAD	TETE SELECT.P.V.	
7	25261-83002	1	CABEZA SELECT.5	5TH SELECT.HEAD	TETE SELECT.5 EME	
8	25271-83002	1	CABEZA SELECT.EJE MA	REV.SHAFT SELEC.HEAD	TETE SELEC.AXE M.A.	
9	09135-08006	1	TORNILLO	SCREW	VIS	
10	08321B31086	1	ARANDELA	WASHER	RONDELLE	
11	08332-11106	1	ANILLO RETENCION	RETAINING RING	ANNEAU DE RETENUE	
12	08212-14201	1	ARANDELA	WASHER	RONDELLE	
13	09448-18016	1	MUELLE	SPRING	RESSORT	
14	09448-18017	1	MUELLE	SPRING	RESSORT	
15	09205-05012	7	PASADOR	PIN	CLAVETTE	
16	09261-03017	1	RODILLO LOCALIZ.EJE	SHAFT LOCAT.ROLLER	ROULEAU LOCALI.AXE	
17	09250-10006	1	TAPON	PLUG	BOUCHON	
18	25415-83000	3	MUELLE	SPRING	RESSORT	
19	06112-12004	5	BOLA	BALL	BILLE	

FIG.26

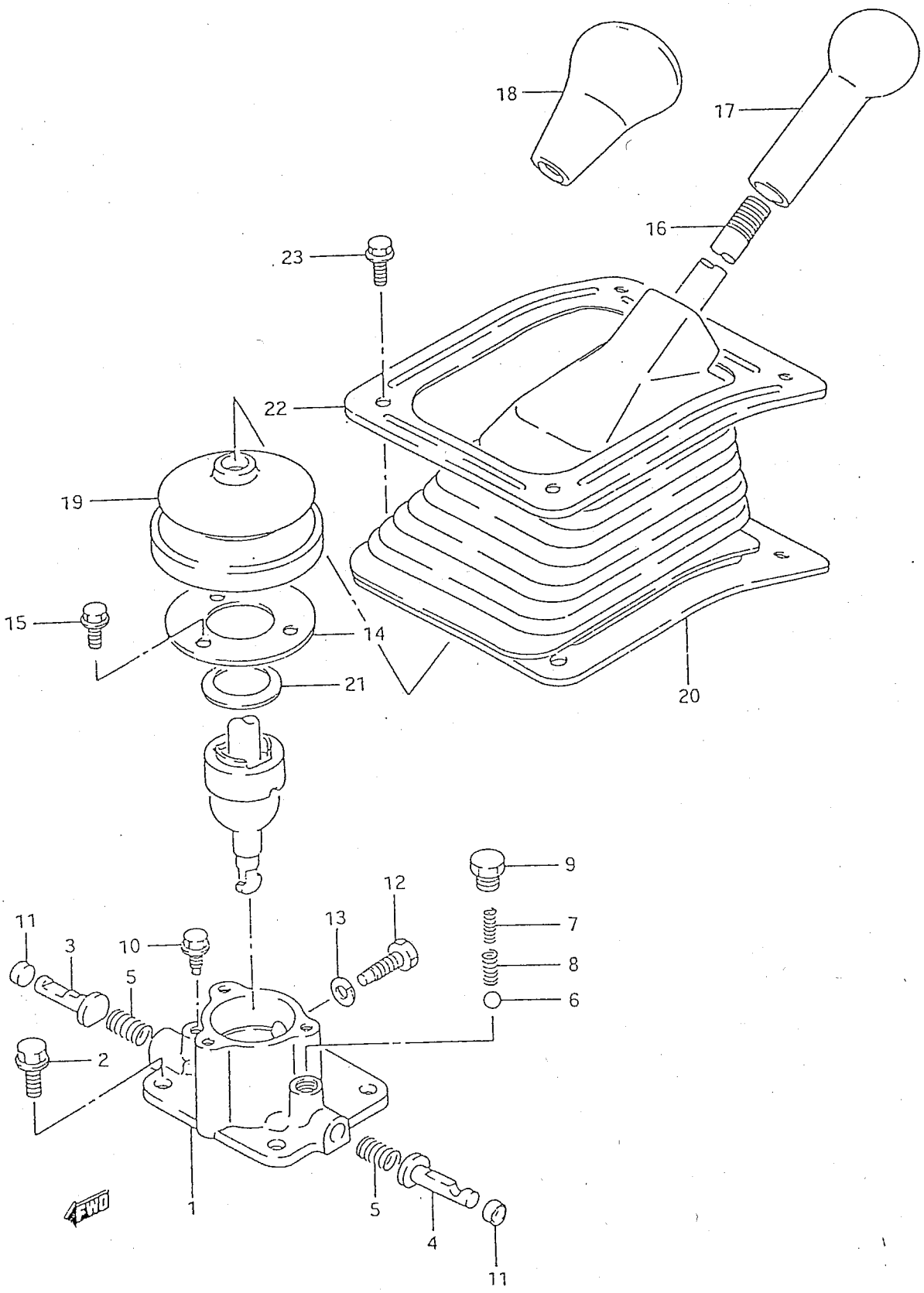

PUBLICACION N:A01116 GRUPO=EMBRAGUE SUBGRUPO=E-05CARTER CAJA CAMB
EDICION N: 1 GROUP=CLUTCH SUBGROUP=E-05GEARBOX CASE
GROUPE=EMBRAYAGE SUBGROUPE=E-05CARTER BOITE VIT

N.FIG PLATE N.FIG	N.PIEZA PARTNUMBER N.PIECE	CAN QTY OUT	DENOMINACION	DESCRIPTION	DENOMINATION	OBSERVACIONES
1	24700-80400	1	C/CARTER CAJA CAMBIO	GEAR BOX CASE ASSY	ENS.CARTER BOITE VIT	
2	09206-13011	2	FIJA	PIN	CLAVETTE	
3	09103-08131	4	TORNILLO	SCREW	VIS	
4	01517-08303	4	TORNILLO	SCREW	VIS	
5	01537-08653	2	TORNILLO	SCREW	VIS	
6	24741-83001	1	TAPA RETENCION COJIN	CUSHION RETAIN.COVER	COUVER.RETENUE COUSS	
7	09103-08130	8	TORNILLO	SCREW	VIS	
8	09250-26005	1	TAPON INSPECCION	CONTROL PLUG	BOUCHON CONTROLE	
9	37610A80042	1	INTERRUPTOR M.A.	REVERSE SWITCH	INTERRUPTEUR M.A.	
10	37610-84C00	1	ANILLO TORICO	O RING	ANNEAU TORIQUE	T2
	37610B80042	1	ANILLO TORICO	O RING	ANNEAU TORIQUE	T1,T3
11	09404A06415	1	ABRAZADERA	CLAMP	COLLIER	
12	35026-00000	1	CABLEADO INTERRUPTOR	SWITCH WIRING	FAISCEAU INTERRUPT.	H 121456
	35330-00000	1	CABLEADO INTERRUPTOR	SWITCH WIRING	FAISCEAU INTERRUPT.	D 121457
13	11851-85000	1	GANCHO	HOOK	CROCHET	
14	24770-80420	1	CARTER EXTENSION	EXTENSION CASE	CARTER EXTENSION	
15	09206-13011	2	FIJA	PIN	CLAVETTE	
16	09103-08132	3	TORNILLO	SCREW	VIS	
17	01517-08353	7	TORNILLO	SCREW	VIS	
18	24780-83010	1	RETEN	SEAL	ARRETOIR	
19	09160-18018	1	ARANDELA	WASHER	RONDELLE	H 121550
	09246A16009	1	TAPON LLENADO	FILLER PLUG	BOUCHON REMPLISSAGE	D 121551
	09247A18003	1	TAPON LLENADO	FILLER PLUG	BOUCHON REMPLISSAGE	H 121550
20	09160-18018	1	ARANDELA	WASHER	RONDELLE	H 121550
	09246A16009	1	TAPON VACIADO	DRAIN PLUG	BOUCHON VIDANGE	D 121551
	09247A18003	1	TAPON VACIADO	DRAIN PLUG	BOUCHON VIDANGE	H 121550
21	01104-08126	1	TAPON	PLUG	BOUCHON	
22	09168A08015	1	JUNTA	GASKET	JOINT	
	29958A80050	1	ARANDELA	WASHER	RONDELLE	H 121550
23	24821-09000	1	TAPON RESPIRADERO	BREATHER PLUG	BOUCHON RESPIRAT.	
24	01421-10503	1	ESPARRAGO	STUD	GOUJON	
25	01421-10453	1	ESPARRAGO	STUD	GOUJON	
26	08316-16103	2	TUERCA	NUT	ECROU	
27	01517-10403	1	TORNILLO	SCREW	VIS	
28	01517-10453	1	TORNILLO	SCREW	VIS	
29	09206-13001	2	FIJA	PIN	CLAVETTE	T2,T3

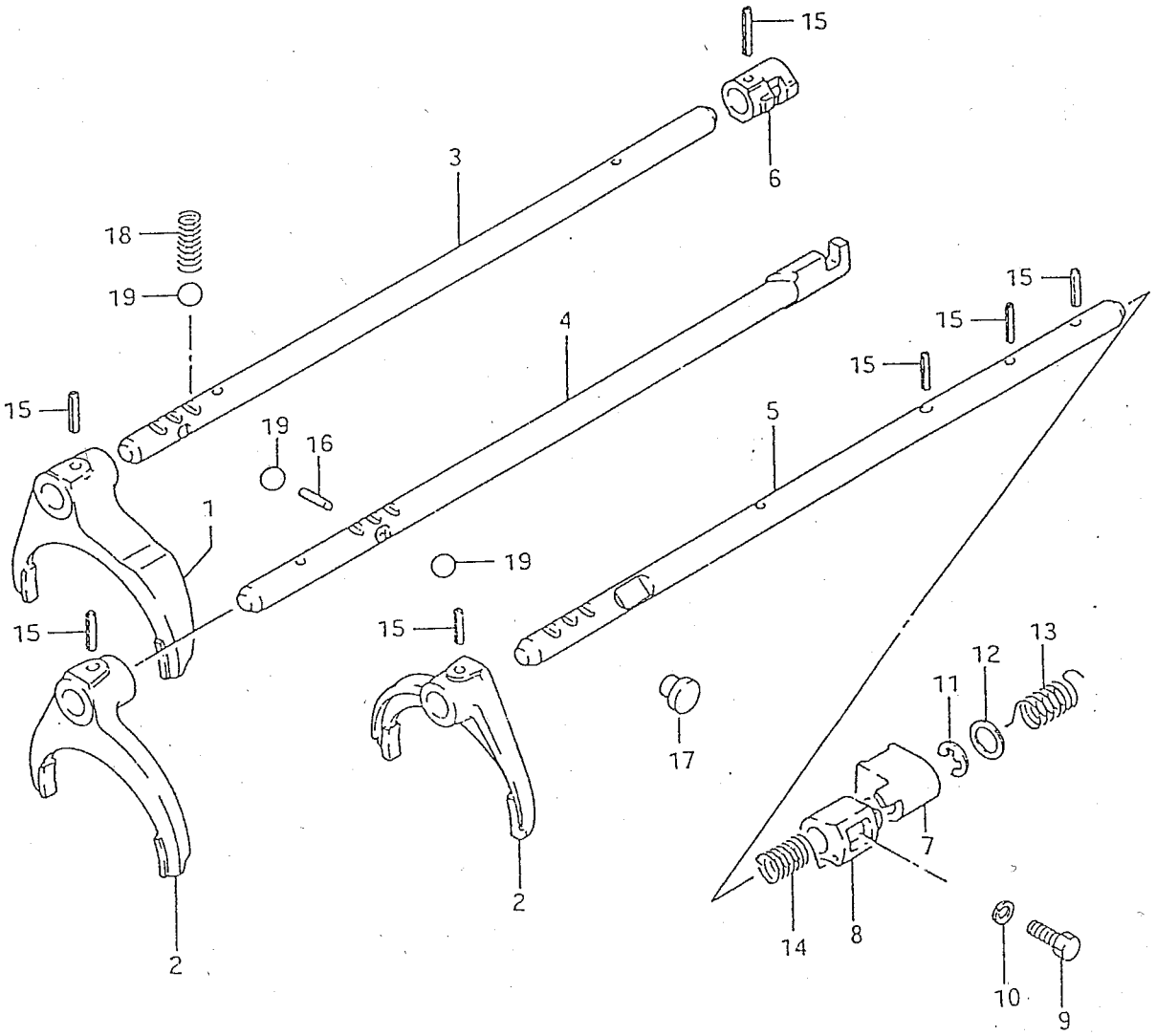
15
6
3
18
19
4
15
15
15
15
19
16
5
1
19
15
15
2
17
13
12
11
7
14
8
10
9
2

PUBLICACION N:A01116 GRUPO=EMBRAGUE SUBGRUPO=E-04.1ENGRANAJE CAJA
EDICION N: 1 GROUP=CLUTCH SUBGROUP=E-04.1GEARBOX GEAR
GROUPE=EMBRAYAGE SUBGROUPE=E-04.1ENGRENAGE BOIT

N.FIG PLATE N.FIG	N.PIEZA PARTNUMBER N.PIECE	CAN QTY OUT	DENOMINACION	DESCRIPTION	DENOMINATION	OBSERVACIONES
30	08113-63040	1	RODAMIENTO TRASERO	REAR BEARING	ROULEMENT ARRIERE	
31	24411-83000	1	CUBO SINCRO.1 Y 2	SYNCHRO.HUB,1 AND 2	MOYEU SYNCHR.1 ET 2	
32	24421-83004	1	CASQUILLO SINC.1 Y 2	SYNCHRO.BUSH 1 AND 2	BAGUE SYNCHR.1 ET 2	
33	24431-83001	2	ANILLO SINCRO.1 Y 2	SYNCHRO.RING,1 AND 2	ANNEAU SYNCHR.1 ET 2	
34	24436-83000	2	MUELLE SINCRO.1 Y 2	SYNCH.SPRING,1 AND 2	RESSORT SYNCH.1 ET 2	
35	09388-00017	2	MUELLE,1 Y 2	SPRING,1 AND 2	RESSORT,1 ET 2	
36	24412-83000	1	CUBO SINCRO.3 Y 4	SYNCHRO.HUB,3 AND 4	MOYEU SYNCHR.3 ET 4	
37	24422-83003	1	CASQUILL.SINCR.3 Y 4	SYNCHRO.BUSH,1 AND 2	BAGUE SYNCHR.3 ET 4	
38	24432-83001	3	ANILLO SINCRO.3 Y 4	SYNCHRO.RING,3 AND 4	ANNEAU SYNCHR.3 ET 4	
39	09388-00019	2	MUELLE,3 Y 4	SPRING,3 AND 4	RESSORT,3 ET 4	
40	09388-00019	2	MUELLE DE 5	SPRING,5 TH	RESSORT,5 EME	
41	24413-83001	1	CUBO M.A.	HUB,REVERSE	MOYEU M.A.	
42	24423-83003	1	CASQUILLO M.A.	BUSH, REVERSE	BAGUE M.A.	
43	09422-05011	6	CHAVETA	COTTER	CLAVETTE	H 111440
	24471-60A00	6	CHAVETA	COTTER	CLAVETTE	D 111441
44	09422-05012	3	CHAVETA	COTTER	CLAVETTE	T1
	24473-70D00	3	CHAVETA	COTTER	CLAVETTE	T2,T3
45	24551-83000	1	EJE ENGRANAJE M.A.	GEAR AXLE,REVERSE	AXE ENGRENAGE,M.A.	
46	09261-06003	1	PASADOR	PIN	GOUPILLE	
47	24560A83001	1	ENGRANAJE TENSOR,M.A	TENSIONER GEAR,REVER	ENGRENAGE TENDEUR,MA	
48	09166-16014	1	ARANDELA	WASHER	RONDELLE	
49	24671-83000	1	ENGRANAJE M.A.SEGUND	SECOND.REVERSE GEAR	ENGRENAGE M.A.SECOND	
50	24681-83000	1	ENGRENAGE M.A.PRIMAR	PRIMAR.REVERSE GEAR	ENGRENAGE M.A.PRIM.	
51	09300-30003	1	CASQUILLO	BUSH	BAGUE	
52	09263-35015	1	RODAMIENTO	BEARING	ROULEMENT	H CIC 03422
	09263-35028	1	RODAMIENTO	BEARING	ROULEMENT	D CIC 03423

FIG.24

E-05

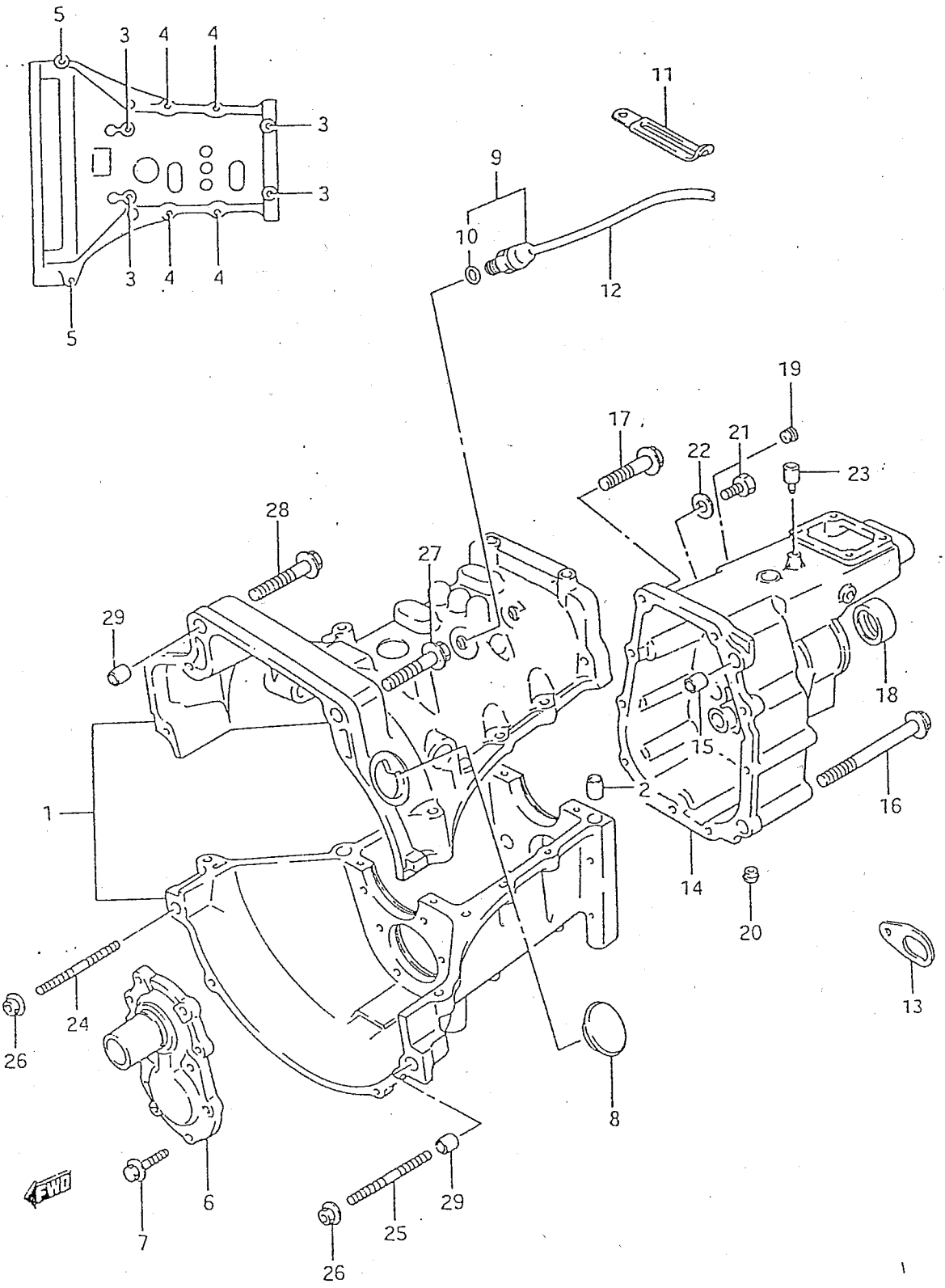
5
3
4
4
3
3
3
4
4
5
11
9
10
12
19
17
21
22
23
28
27
29
18
15
2
16
1
14
20
13
24
26
8
6
7
25
29
26

PUBLICACION N:A01116 GRUPO=EMBRAGUE SUBGRUPO=E-08.1ENGRAN.TRANSF.
EDICION N: 1 GROUP=CLUTCH SUBGROUP=E-08.1TRANSFER GEAR
GROUPE=EMBRAYAGE SUBGROUPE=E-08.1ENGREN.TRANSF.

N.FIG PLATE N.FIG	N.PIEZA PARTNUMBER N.PIECE	CAN QTY OUT	DENOMINACION	DESCRIPTION	DENOMINATION	OBSERVACIONES
28	29911-80050	1	CIRCLIP	CIRCLIP	CIRCLIP	
29	29981-80050	1	RODAMIENTO TRASERO	REAR BEARING	ROULEMENT ARRIERE	T1,T2
	29981-80051	1	RODAMIENTO TRASERO	REAR BEARING	ROULEMENT ARRIERE	T3
30	29147-80050	2	SUPLEMENTO 0,1	SHIM, 0,1	SUPPLEMENT, 0,1	
	29148-80050	2	SUPLEMENTO 0,3	SHIM, 0,3	SUPPLEMENT, 0,3	
	29149-80050	1	SUPLEMENTO 0,5	SHIM, 0,5	SUPPLEMENT, 0,5	
31	29143-80050	1	RETENEDOR	RETAINER	ARRET	
32	29972-80050	1	RETEN	SEAL	ARRETOIR	
33	27110-83251	1	C/ BRIDA JUNTA	GASKET CLAMP ASSY	ENS.COLLIER JOINT	
34	29951-83050	1	TUERCA	NUT	ECROU	
35	29151-80050	1	EJE DEL.SALIDA	OUTLET FRONT SHAFT	AXE AVANT SORTIE	
36	29981-80050	1	RODAMIENTO	BEARING	ROULEMENT	T1,T2
	29981-80051	1	RODAMIENTO	BEARING	ROULEMENT	T3
37	29992-80050	1	CIRCLIP	CIRCLIP	CIRCLIP	
38	29971-80051	1	RETEN	SEAL	ARRETOIR	
39	27110-83053	1	BRIDA	CLAMP	COLLIER	
40	29951-83050	1	TUERCA	NUT	ECROU	
41	29411-83050	1	ENGRANAJE CONDUCTOR	CONDUCTOR GEAR	ENGRENAGE CONDUCTEUR	T1
	29411-83051	1	ENGRANAJE CONDUCTOR	CONDUCTOR GEAR	ENGRENAGE CONDUCTEUR	T2,T3
42	29421-80450	1	ENGRANAJE CONDUCIDO	CONDUCTED GEAR	ENGRENAGE MENE	T1
	29421-80451	1	ENGRANAJE CONDUCIDO	CONDUCTED GEAR	ENGRENAGE MENE	T2,T3
43	29431-80051	1	ALOJAMIENTO	HOUSING	LOGEMENT	T1
	29431-80052	1	ALOJAMIENTO	HOUSING	LOGEMENT	T2,T3
44	29977-80050	1	ANILLO TORICO N.2	O RING N.2	ANNEAU TORIQUE N.2	
45	29973-80050	1	RETEN	SEAL	ARRETOIR	
46	09280-19001	1	ANILLO TORICO	O RING	ANNEAU TORIQUE	
47	09128-06032	1	TORNILLO	SCREW	VIS	

FIG.28

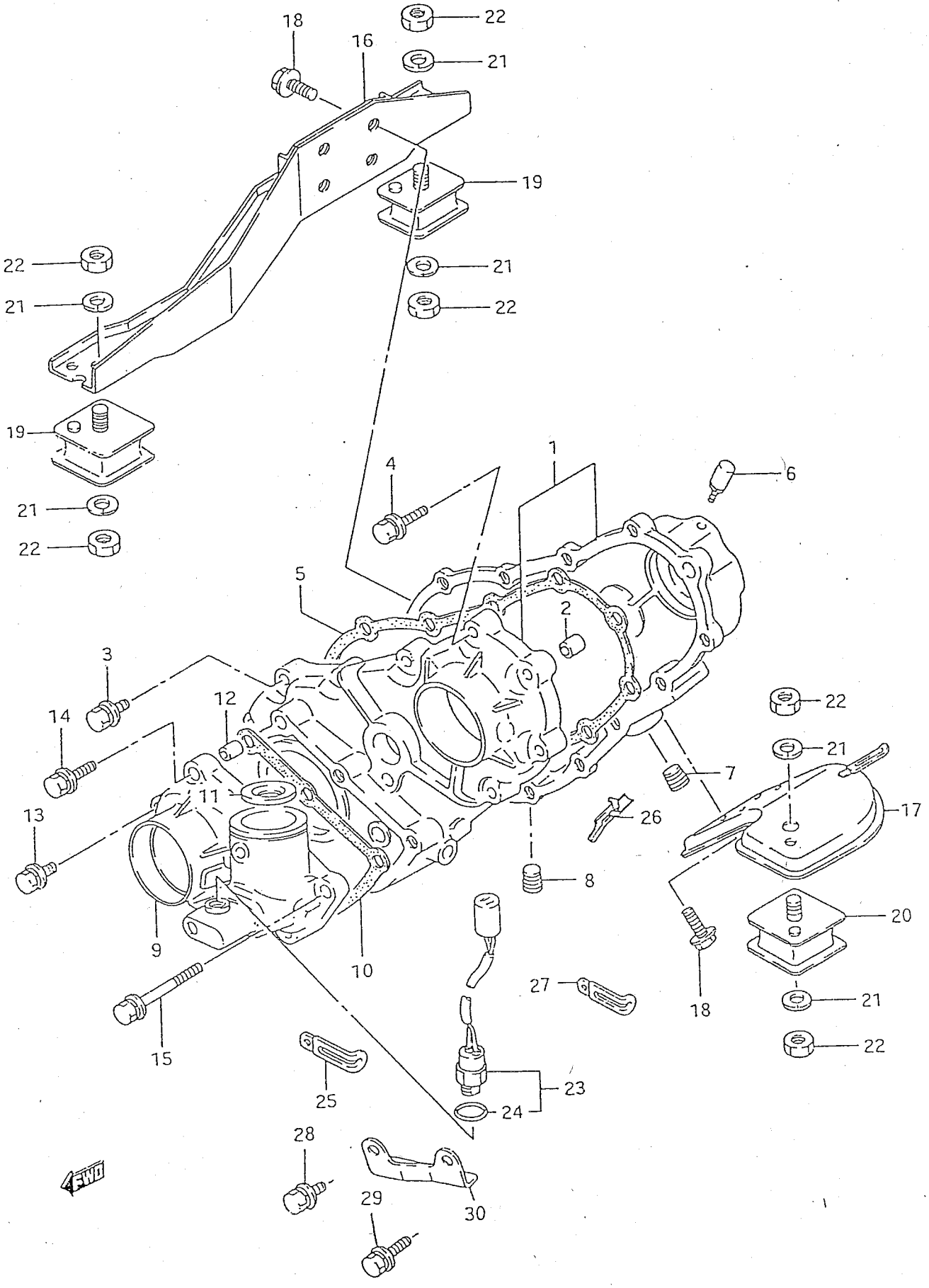
18
16
22
21
19
22
21
21
22
19
21
22
4
1
6
5
2
3
14
12
22
21
11
7
13
26
17
8
20
9
10
27
18
21
15
22
25
23
24
28
30
29
4WD

PUBLICACION N:A01116 GRUPO=EMBRAGUE SUBGRUPO=E-09CARTER TRANSF.
EDICION N: 1 GROUP=CLUTCH SUBGROUP=E-09TRANSFER CASE
GROUPE=EMBRAYAGE SUBGROUPE=E-09CARTER TRANSFERT

N.FIG PLATE N.FIG	N.PIEZA PARTNUMBER N.PIECE	CAN QTY OUT	DENOMINACION	DESCRIPTION	DENOMINATION	OBSERVACIONES
1	29510-80053	1	CARTER TRANSFERENCIA	TRANSFER CASE	CARTER TRANSFERT	T3
	29510A80051	1	CARTER TRANSFERENCIA	TRANSFER CASE	CARTER TRANSFERT	T1,T2
2	29527-80050	2	CASQUILLO FIJA	PIN BUSH	BAGUE CLAVETTE	
3	01107-08303	2/3	TORNILLO	SCREW	VIS	T1,T2/T3
	08321B31086	2/3	ARANDELA	WASHER	RONDELLE	T1,T2/T3
	08322-11086	2/3	ARANDELA	WASHER	RONDELLE	T1,T2/T3
4	01107-08403	6	TORNILLO	SCREW	VIS	
	08321B31086	6	ARANDELA	WASHER	RONDELLE	
	08322-11086	6	ARANDELA	WASHER	RONDELLE	
5	29525A80050	1	JUNTA CARTER CENTRAL	CENTRAL CASE GASKET	JOINT CARTER CENTRAL	
6	29515-80050	1	TAPON RESPIRADERO	BREATHER PLUG	BOUCHON RESPIRATEUR	
7	08322-11086	1	ARANDELA PLANA	FLAT WASHER	RONDELLE PLATE	T3
	09160-18018	1	ARANDELA PLANA	FLAT WASHER	RONDELLE PLATE	T1,T2
	09246A16009	1	TAPON LLENADO	FILLER PLUG	BOUCHON REMPLISSAGE	T3
	29945A80050	1	TAPON LLENADO	FILLER PLUG	BOUCHON REMPLISSAGE	T1,T2
8	08322-11086	1	ARANDELA PLANA	FLAT WASHER	RONDELLE PLATE	T3
	09160-18018	1	ARANDELA PLANA	FLAT WASHER	RONDELLE PLATE	T1,T2
	09246A16010	1	TAPON VACIADO	DRAIN PLUG	BOUCHON VIDANGE	T3
	29946A80050	1	TAPON VACIADO	DRAIN PLUG	BOUCHON VIDANGE	T1,T2
9	29530-80050	1	CARCAZA DELANTERA	FRONT HOUSING	LOGEMENT AVANT	T1,T2
	29530-80051	1	CARCAZA DELANTERA	FRONT HOUSING	LOGEMENT AVANT	T3
10	29535-80050	1	JUNTA DELANTERA	FRONT GASKET	JOINT AVANT	
11	29540-80050	1	ASIENTO ESFERICO	ROUND SEAT	ASSISE SPHERIQUE	
12	29527-80050	2	CASQUILLO FIJA	PIN BUSH	BAGUE CLAVETTE	
13	01107-08303	2	TORNILLO	SCREW	VIS	
	08321B31086	2	ARANDELA MUELLE	SPRING WASHER	RONDELLE ELASTIQUE	
	08322-11086	2	ARANDELA PLANA	FLAT WASHER	RONDELLE PLATE	
14	01107-08403	3	TORNILLO	SCREW	VIS	
	08321B31086	3	ARANDELA MUELLE	SPRING WASHER	RONDELLE ELASTIQUE	
	08322-11086	3	ARANDELA PLANA	FLAT WASHER	RONDELLE PLATE	
15	01107-08803	2	TORNILLO	SCREW	VIS	
	08321B31086	2	ARANDELA MUELLE	SPRING WASHER	RONDELLE ELASTIQUE	
	08322-11086	2	ARANDELA PLANA	FLAT WASHER	RONDELLE PLATE	
16	29620-80701	1	SOPORTE TRANSFER.L/D	TRANSFER BRACKET,R/H	SUPPORT TRANSF.C/D	
17	29630-80700	1	SOPORTE TRANSFER.L/I	TRANSFER BRACKET,L/H	SUPPORT TRANSF.C/G	
18	01517-08203	8	TORNILLO	SCREW	VIS	
19	29610A83001	2	TACO SUSPENSION,L/D	SUSPENSION PAD,R/H	ARRETOIR SUSPENS.C/D	
20	29610A83001	1	TACO SUSPENSION,L/I	SUSPENSION PAD,L/H	ARRETOIR SUSPENS.C/G	
21	08321B31103	6	ARANDELA GROWER	GROWER WASHER	RONDELLE GROWER	
22	08310-11103	6	TUERCA	NUT	ECROU	
23	35152-00000	1	INTERRUPTOR 4 X 4	SWITCH 4 X 4	INTERRUPTEUR 4 X 4	

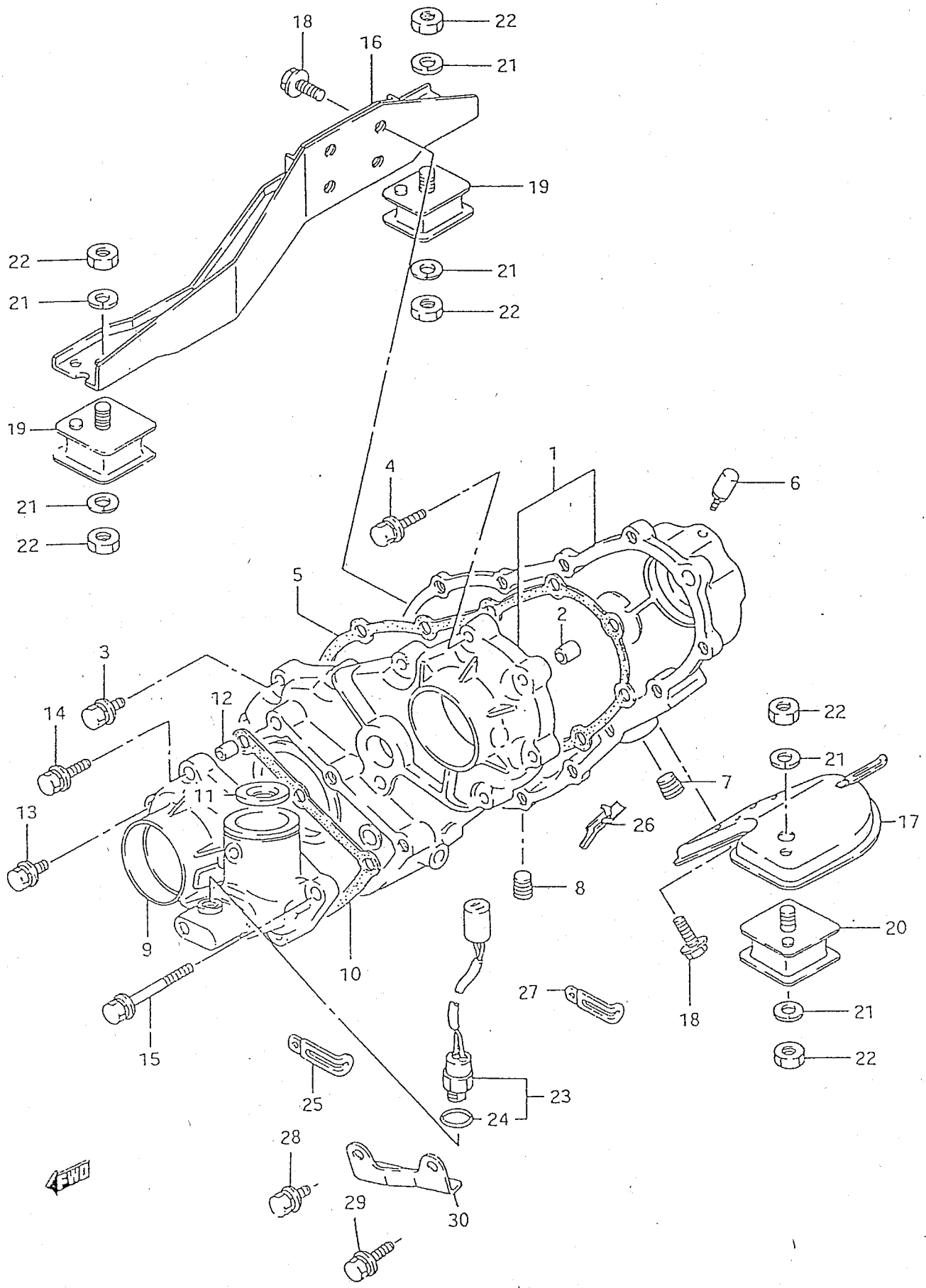
18
16
22
21
19
22
21
21
22
19
21
22
4
1
6
5
2
3
14
12
22
21
7
11
13
26
17
8
20
9
10
27
18
21
15
22
25
23
24
28
29
30
FWD

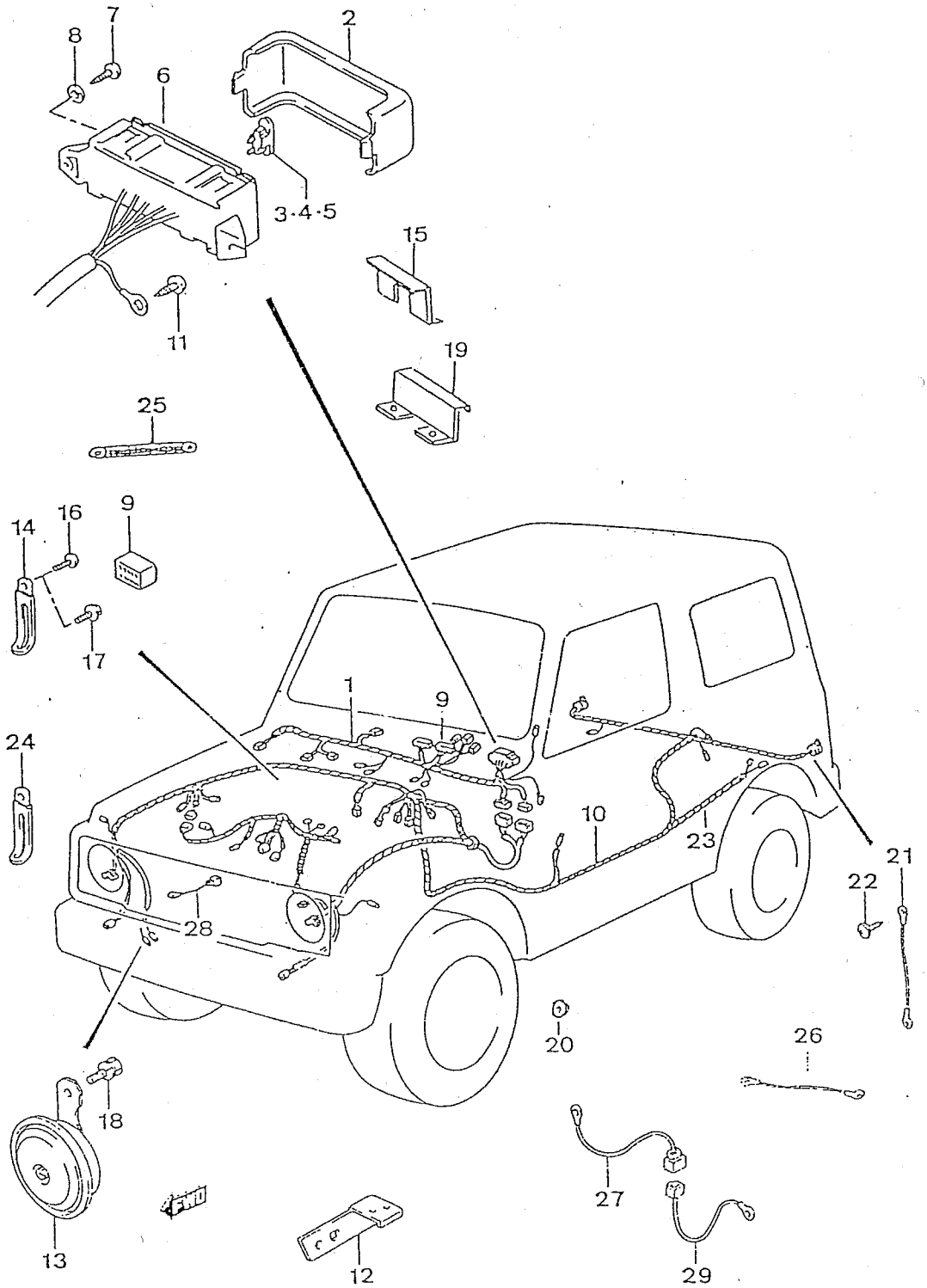
8
7
2
6
3·4·5
15
11
19
25
14
16
9
17
1
9
24
10
23
21
22
28
20
26
18
27
13
12
29

PUBLICACION N:A01116 GRUPO=SISTEMA ELECTRICO SUBGRUPO=F-10PILOTO TRASERO
EDICION N: 1 GROUP=ELECTRIC SYSTEM SUBGROUP=F-10REAR LIGHT
GROUPE=SYSTEME ELECTRIQUE SUBGROUPE=F-10FEU ARRIERE

N.FIG PLATE N.FIG	N.PIEZA PARTNUMBER N.PIECE	CAN QTY OUT	DENOMINACION	DESCRIPTION	DENOMINATION	OBSERVACIONES
1	35243-00000	1	PILOT.INTER.TRAS.L/D	REAR FLASHER,R/H	CLIGNOTANT ARR.C/D	H 121456
	35603A80013	1	PILOT.INTER.TRAS.L/D	REAR FLASHER,R/H	CLIGNOTANT ARR.C/D	D 121457
2	35244-00000	1	PILOT.INTER.TRAS.L/I	REAR FLASHER,L/H	CLIGNOTANT ARR.C/G	H 121456
	35604A80013	1	PILOT.INTER.TRAS.L/I	REAR FLASHER,L/H	CLIGNOTANT ARR.C/G	D 121457
3	00000A00103	1	TRANSPARENC.ROJA,L/I	RED PLASTIC,L/H	TRANSPAREN.ROUGE,C/G	H 121456
	00000A00105	1	TRANSPARENC.ROJA,L/D	RED PLASTIC,R/H	TRANSPAREN.ROUGE,C/D	H 121456
4	00000A00099	8	TORNILLO	SCREW	VIS	
5	00000A00106	2	TRANSPARENCIA AMBAR	AMBER PLASTIC	PLASTIQUE AMBRE	H 121456
6	00000A00107	2	TRANSPARENC.INCOLORO	PLASTIC,NO COLOUR	TRANSPARENCE INCOLOR	H 121456
7	00000A00101	4	LAMPARA 12 V	BULB 12 V	LAMPE 12 V	
8	00000A00109	2	LAMPARA 12 V	BULB 12 V	LAMPE 12 V	
9	03111-05126	2	TORNILLO FIJAC.MASA	FIXING SCREW	VIS FIXATION	T1,T2
	09139-05028	2	TORNILLO FIJAC.MASA	FIXING SCREW	VIS FIXATION	T3
10	08322-21056	2	ARANDELA	WASHER	RONDELLE	T1,T2
11	35910B80011	2	LUZ MATRICULA	LICENSE LIGHT	FEU PLAQUE IMMATRI.	H 121456
	35910C80011	2	LUZ MATRICULA	LICENSE LIGHT	FEU PLAQUE IMMATRI.	D 121457
12	00000A00149	2	PLASTICO	PLASTIC	TRANSPARENCE	
13	00000A00148	2	LAMPARA	BULB	LAMPE	
14	36570A79000	1	LUZ ANTINIEBLA TRAS.	REAR ANTIFOG LIGHT	ANTI-BROUILLARD ARR.	H 121456
15	00000A00101	1	LAMPARA 12 V	BULB 12 V	LAMPE 12 V	H 121456
16	00000A00110	1	TRANSPARENC.ANTINIEB	ANTIFOG PLASTIC	TRANSPAREN.ANTI-BROU	H 121456
17	36580-80001	1	SOPORTE LUZ ANTINIEB	ANTIFOG BRACKET	SUPPORT ANTI-BROUILL	H 121456
18	01104-06166	2	TORNILLO	SCREW	VIS	H 121456
19	09160-06016	2	ARANDELA PLANA	FLAT WASHER	RONDELLE PLATE	H 121456
20	08321A31066	2	ARANDELA	WASHER	RONDELLE	H 121456
21	03141-06126	1	TORNILLO	SCREW	VIS	H 121456
22	36570C79000	1	SOPORTE PILOTO	LIGHT BRACKET	SUPPORT FEU	H 121456
23	08310-11086	1	TUERCA	NUT	ECROU	H 121456
24	02005-00000	1	ARANDELA	WASHER	RONDELLE	H 121456
25	02007-00000	1	ARANDELA ESTRELLA	STAR WASHER	RONDELLE EN ETOILE	H 121456
26	35243-00000	1	C/PILOTO TRAS.L/D	REAR LIGHT ASSY,R/H	ENS.FEU ARR.C/D	D 121457
	35603A80013	1	C/PILOTO TRAS.L/D	REAR LIGHT ASSY,R/H	ENS.FEU ARR.C/D	T3
27	35244-00000	1	C/PILOTO TRAS.L/I	REAR LIGHT ASSY,L/H	ENS.FEU ARR.C/G	D 121457
	35604A80013	1	C/PILOTO TRAS.L/I	REAR LIGHT ASSY,L/H	ENS.FEU ARR.C/G	T3
28	00000A00694	1	TRANSPARENCIA,L/D	PLASTIC,R/H	TRANSPARENCE,C/D	D 121457
29	00000A00695	1	TRANSPARENCIA,L/I	PLASTIC,L/H	TRANSPARENCE,C/G	D 121457
30	09407A23401	1	ABRAZADERA	CLAMP	COLLIER	T2,T3-NOT SHOWN

FIG. 29

PUBLICACION N:A01116 GRUPO=EMBRAGUE SUBGRUPO=E-10PALANCA TRANSF.
EDICION N: 1 GROUP=CLUTCH SUBGROUP=E-10TRANSFER LEVER
GROUPE=EMBRAYAGE SUBGROUPE=E-10LEVIER TRANSFERT

N.FIG PLATE N.FIG	N.PIEZA PARTNUMBER N.PIECE	CAN QTY OUT	DENOMINACION	DESCRIPTION	DENOMINATION	OBSERVACIONES
1	29310-80050	1	HORQUILLA SELECTORA	SELECTING YOKE	FOURCHETTE SELECTION	
2	29321-80052	1	HORQUILLA REDUCTORA	REDUCTION YOKE	FOURCHETTE REDUCTION	
3	29331-80050	1	EJE SELECT.TRANSMIS.	TRANSMI.SELECT.SHAFT	AXE SELECT.TRANSMISS	
4	29332-80051	1	EJE SELECT.REDUCTOR	REDUCTOR SELEC.SHAFT	AXE SELECT.REDUCTEUR	
5	08332-11106	1	ANILLO	RING	ANNEAU	
6	09205-04003	1	PASADOR	PIN	CLAVETTE	
7	09205-04001	1	PASADOR,L:22	PIN,L:22	CLAVETTE,L:22	
8	06112-10004	3	BOLA	BALL	BILLE	
9	06112-12004	1	BOLA	BALL	BILLE	
10	29995-80050	2	MUELLE	SPRING	RESSORT	
11	29941-80050	1	TORNILLO	SCREW	VIS	
12	29344-80000	1	BOLA PALANCA	LEVER KNOB	BOULE LEVIER	
13	29341-80701	1	PALANCA CONTROL	CONTROL LEVER	LEVIER CONTROLE	
14	29996-80050	1	MUELLE	SPRING	RESSORT	
15	29348-80050	1	CAZOLETA	CUP	COUVERCLE	
16	29345-80051	1	GUARDAPOLVOS	BOOT	PARE-POUSSIERES	
17	09401-50402	1	ABRAZADERA	CLAMP	COLLIER	
18	29346-80002	1	GUARDAPOLVOS	BOOT	PARE-POUSSIERES	
19	29347A80001	1	CERQUILLO NEGRO	BLACK FRAME	CADRE NOIR	
20	03141-05125	4	TORNILLO	SCREW	VIS	
	09161A06008	4	ARANDELA	WASHER	RONDELLE	
21	28381A83000	1	ETIQUETA USO PALANCA	LEVER USE LABEL	ETIQUET.USAGE LEVIER	

FIG.29

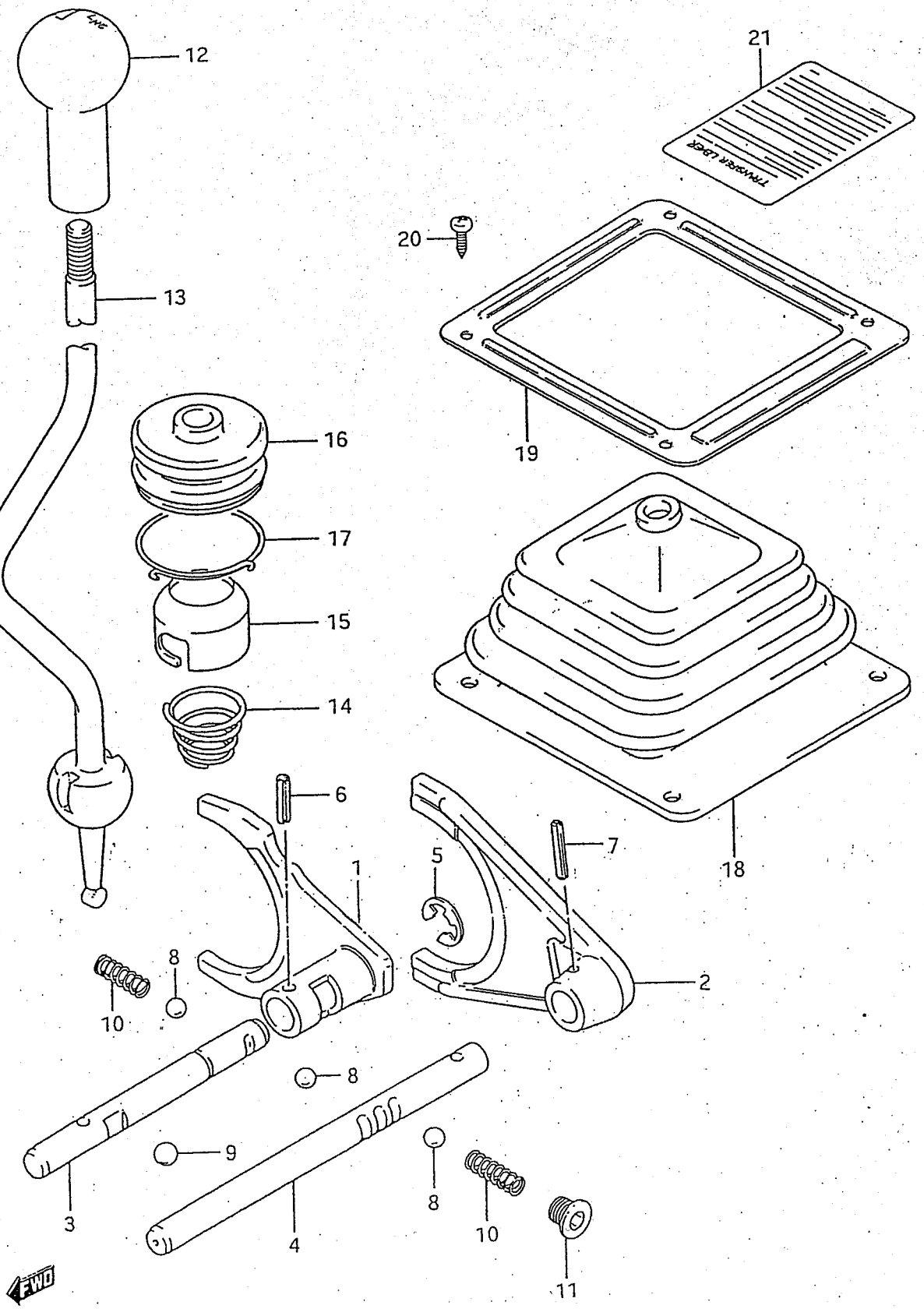
12
21
TRANSFER LEVER
20
13
19
16
17
15
14
18
6
7
1
5
8
10
2
8
9
8
10
3
4
11
4WD

PUBLICACION N:A01116 GRUPO=EMBRAGUE SUBGRUPO=E-09.1CARTER TRANSF.
EDICION N: 1 GROUP=CLUTCH SUBGROUP=E-09.1TRANSF.CASE
GROUPE=EMBRAYAGE SUBGROUPE=E-09.1CARTER TRANSF.

N.FIG PLATE N.FIG	N.PIEZA PARTNUMBER N.PIECE	CAN QTY OUT	DENOMINACION	DESCRIPTION	DENOMINATION	OBSERVACIONES
24	37610-84C00	1	ANILLO TORICO	O RING	ANNEAU TORIQUE	T2
	37610B80042	1	ANILLO TORICO	O RING	ANNEAU TORIQUE	T1,T3
25	09405A35402	1	ABRAZADERA	CLAMP	COLLIER	
26	29660-83000	1	RECOGEDOR ACEITE	OIL RECEIVER PIPE	TUYAU PASSAGE HUILE	T2,T3
27	24759A78130	2	CLIP INTERRUPTOR	SWITCH CLIP	CLIP INTERRUPTEUR	
28	01107-08353	1	TORNILLO	SCREW	VIS	T1,T2
	08321B31086	1	ARANDELA	WASHER	RONDELLE	T1,T2
	08322-11086	1	ARANDELA	WASHER	RONDELLE	T1,T2
29	01107-08453	1/2	TORNILLO	SCREW	VIS	T1,T2/T3
	08321B31086	1/2	ARANDELA	WASHER	RONDELLE	T1,T2/T3
	08322-11086	1/2	ARANDELA	WASHER	RONDELLE	T1,T2/T3
30	29947-83200	1	PROTECTOR TAPON	PLUG PROTECTOR	PROTECTEUR BOUCHON	T1,T2

FIG.30

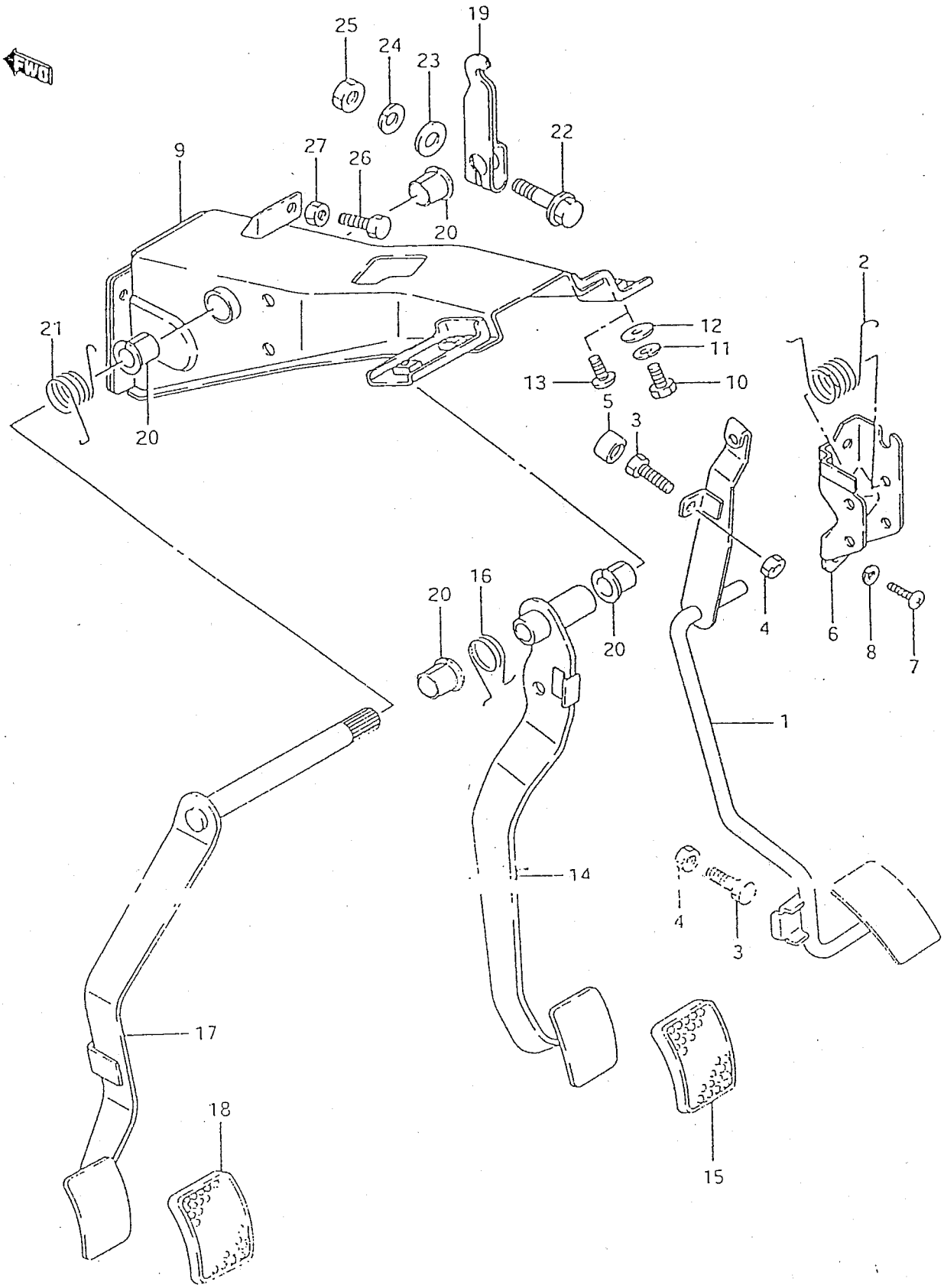
FWD
25
24
23
19
22
9
27
26
20
21
20
12
11
13
10
5
3
2
4
6
8
7
20
16
20
1
14
4
3
17
18
15

PUBLICACION N:A01116 GRUPO=EMBRAGUE SUBGRUPO=E-11PEDALES
EDICION N: 1 GROUP=CLUTCH SUBGROUP=E-11PEDALS
GROUPE=EMBRAYAGE SUBGROUPE=E-11PEDALES

N.FIG PLATE N.FIG	N.PIEZA PARTNUMBER N.PIECE	CAN QTY OUT	DENOMINACION	DESCRIPTION	DENOMINATION	OBSERVACIONES
1	49410-83011	1	PEDAL ACELERADOR	ACCELARATOR PEDAL	PEDALE ACCELARATEUR	
2	09448-21003	1	MUELLE PEDAL	PEDAL SPRING	RESSORT PEDALE	
3	09100-06055	2	TORNILLO	SCREW	VIS	
4	08310-11066	2	TUERCA	NUT	ECROU	
5	09251-09002	1	TOPE	STOP	BUTEE	
6	49511-80110	1	SOPORTE PEDAL	PEDAL BRACKET	SUPPORT PEDALE	
7	01107-06123	2	TORNILLO	SCREW	VIS	T2,T3
	02112-06126	2	TORNILLO	SCREW	VIS	T1
8	08321A31063	2	ARANDELA MUELLE	SPRING WASHER	RONDELLE ELASTIQUE	
9	49710A80110	1	SOPORTE PEDAL	PEDAL BRACKET	SUPPORT PEDALE	T1
	49710B83010	1	SOPORTE PEDAL	PEDAL BRACKET	SUPPORT PEDALE	H 117302
	49710C83010	1	SOPORTE PEDAL	PEDAL BRACKET	SUPPORT PEDALE	D 117303
10	01107-08206	2	TORNILLO	SCREW	VIS	H 117302
	01107-08303	2	TORNILLO	SCREW	VIS	D 117303
11	09160T08075	2	ARANDELA	WASHER	RONDELLE	
12	09160-10001	S-N	ARANDELA	WASHER	RONDELLE	D 117303
13	01107-08206	2	TORNILLO	SCREW	VIS	T1
14	49610-80110	1	PEDAL DE FRENO	BRAKE PEDAL	PEDALE DE FREIN	
15	49751-79001	1	GOMA PEDAL FRENO	BRAKE PEDAL RUBBER	CAOUTCHOUC PEDALE FR	
16	09448-31030	1	MUELLE PEDAL	PEDAL SPRING	RESSORT PEDALE	
17	49810-80110	1	PEDAL EMBRAGUE	CLUTCH PEDAL	PEDALE EMBRAYAGE	
18	49751-79001	1	GOMA PEDAL EMBRAGUE	CLUTCH PEDAL RUBBER	CAOUTCH.PEDALE EMBRA	
19	49821-80110	1	BRAZO EJE	SHAFT ARM	BRAS AXE	
20	09306-14004	4	CASQUILLO EJE PEDAL	PEDAL SHAFT BUSH	BAGUE AXE PEDALE	
21	09448-30010	1	MUELLE	SPRING	RESSORT	
22	01517-08356	1	TORNILLO	SCREW	VIS	
23	02009-00000	1	ARANDELA PLANA	FLAT WASHER	RONDELLE PLATE	
24	08321B31086	1	ARANDELA MUELLE	SPRING WASHER	RONDELLE ELASTIQUE	
25	08310-11086	1	TUERCA	NUT	ECROU	
26	09100-06055	1	TORNILLO	SCREW	VIS	
27	08310-11066	1	TUERCA	NUT	ECROU	

GRUPO 05 SISTEMA ELECTRICO

GROUP 05 ELECTRIC SYSTEM

GROUP 05 SYSTEME ELECTRIQUE

COMPOSICION.....COMPOSITION.....COMPOSICION

REFERENCIA PARTNUMBER NUM.PIECE	DENOMINACION	DESCRIPTION	DENOMINATION
405031	F-02MOTOR ARRANQUE	F-02STARTER	F-02DEMARREUR
405032	F-03ALTERNADOR	F-03ALTERNATOR	F-03ALTERNATEUR
405032.1	F-03.1ALTERNADOR	F-03.1ALTERNATOR	F-03.1ALTERNATEUR
405032.2	F-03.2ALTERNADOR	F-03.2ALTERNATOR	F-03.2ALTERNATEUR
405033	F-04DISTRIBUIDOR	F-04DISTRIBUTOR	F-04DISTRIBUTEUR
405034	F-05DISTRIBUIDOR	F-05DISTRIBUTOR	F-05DISTRIBUTEUR
405035	F-06BATERIA	F-06BATTERY	F-06BATTERIE
405036	F-07PANEL INSTRUM.	F-07DASH BOARD	F-07TABLEAU BORD
405037	F-08FARO DELANTERO	F-08HEADLIGET	F-08PHARE
405038	F-09PILOTO DELANTERO	F-09FRONT LIGET	F-09FEU AVANT
405039	F-10PILOTO TRASERO	F-10REAR LIGET	F-10FEU ARRIERE
405040	F-11CABLEADO	F-11WIRING	F-11FAISCEAU
405040.1	F-11.1CABLEADO	F-11.1WIRING	F-11.1FAISCEAU
405041	F-12INTERRUPTORES	F-12SWITCHES	F-12INTERRUPTEURS
405041.1	F-12.1INTERRUPTORES	F-12.1SWITCHES	F-12.1INTERRUPTEURS
405042	F-13LIMPIA DELANTERO	F-13FR.WINDSC.WIPER	F-13ESSUI-GLACE AV.
405043	F-14LIMPIA TRAS.JH	F-14RR.WINDSC.WIP.JH	F-14ESSUI-GL.ARR.JH
405043.1	F-14.1LIMPIA TRAS.JH	F-14.1RR WIND.WIP.JH	F-14.1ESSUI-G.ARR.JH
405043.2	F-14.2LIMPIA TRAS.V	F-14.2RR WIND.WIP.V	F-14.2ESSUI-G.ARR.V

FIG.31

F-02

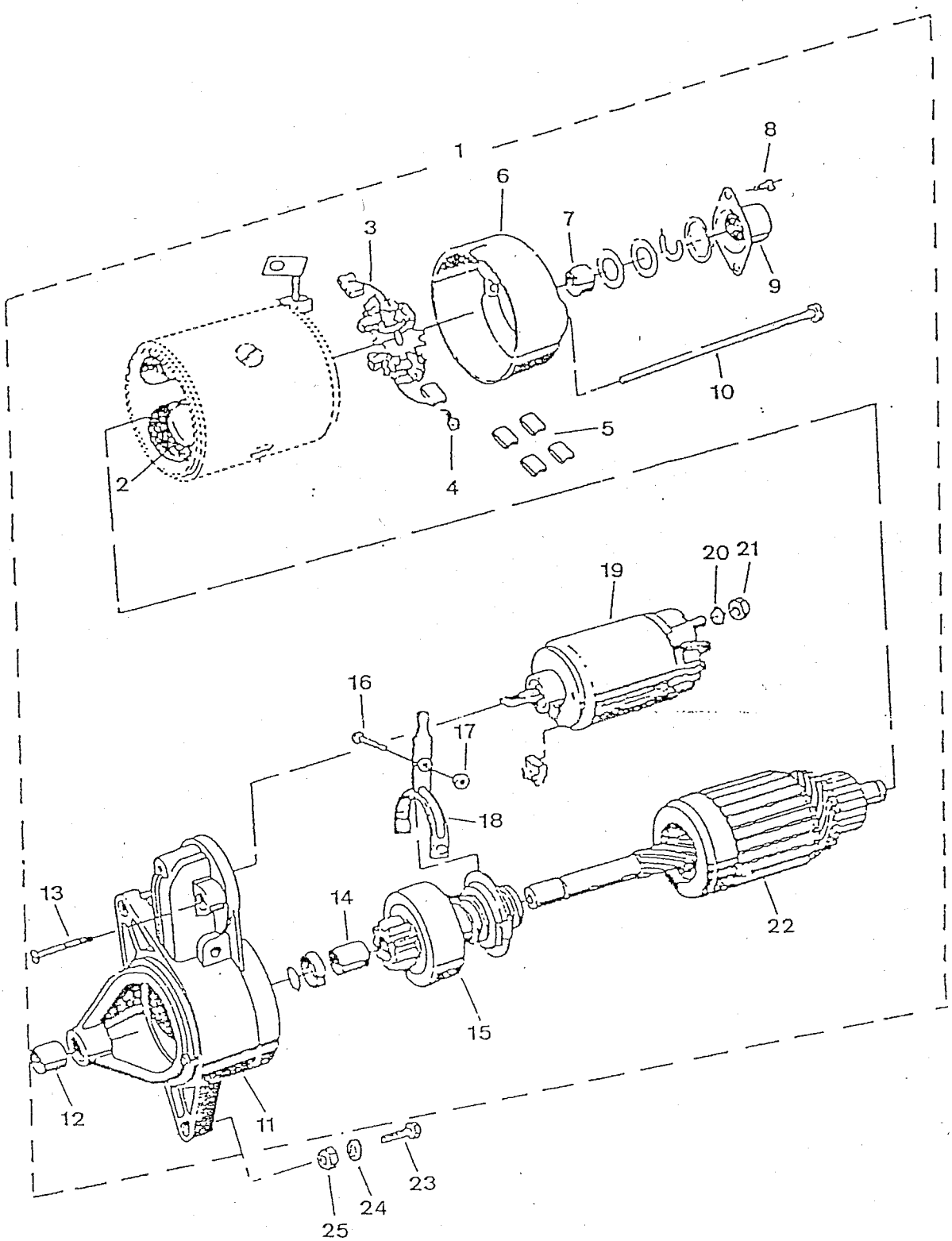

PUBLICACION N:A01116 GRUPO=SISTEMA ELECTRICO SUBGRUPO=F-02MOTOR ARRANQUE
EDICION N: 1 GROUP=ELECTRIC SYSTEM SUBGROUP=F-02STARTER
GROUPE=SYSTEME ELECTRIQUE SUBGROUPE=F-02DEMARREUR

N.FIG PLATE N.FIG	N.PIEZA PARTNUMBER N.PIECE	CAN QTY OUT	DENOMINACION	DESCRIPTION	DENOMINATION	OBSERVACIONES
1	31100A73032	1	C/MOTOR ARRANQUE	STARTER ASSY	ENS.DEMARREUR	'FEMSA-BOSCH'
2	00000A00017	1	INDUCTOR	FIELD	INDUCTEUR	
3	00000A00020	1	PORTA-ESCOBILLA	BRUSH HOLDER	PORTE-BALAIS	
4	00000A00021	4	MUELLE	SPRING	RESSORT	
5	00000A00022	1	JUEGO ESCOBILLA	BRUSH ASSY	ENS.BALAIS	
6	00000A00023	1	TAPA TRASERA	REAR COVER	COUVERCLE ARRIERE	
7	00000A00024	1	CASQUILLO	BUSH	BAGUE	
8	00000A00029	2	TORNILLO	SCREW	VIS	
9	00000A00030	1	CAPSULA	COVER	COUVERCLE	
10	00000A00031	2	TORNILLO	SCREW	VIS	
11	00000A00032	1	TAPA DELANTERA	FRONT COVER	COUVERCLE AVANT	
12	00000A00033	1	CASQUILLO	BUSH	BAGUE	
13	00000A00034	2	TORNILLO	SCREW	VIS	
14	00000A00037	2	CASQUILLO	BUSH	BAGUE	
15	00000A00038	1	PINON	PINION	PIGNON	
16	00000A00039	1	TORNILLO	SCREW	VIS	
17	00000A00040	1	TUERCA	NUT	ECROU	
18	00000A00041	1	HORQUILLA	FORK	FOURCHETTE	
19	00000A00042	1	CONTACTOR	CONTACTOR	CONTACTEUR	
20	00000A00044	1	ARANDELA	WASHER	RONDELLE	
21	00000A00045	1	TUERCA	NUT	ECROU	
22	00000A00046	1	INDUCIDO	ARMATURE	INDUIT	
23	01517-08453	1	TORNILLO	SCREW	VIS	
	01517-08506	2	TORNILLO	SCREW	VIS	
24	02010-00000	1	ARANDELA MUELLE	SPRING WASHER	RONDELLE ELASTIQUE	
	08321B31086	2	ARANDELA GROWER	GROWER WASHER	RONDELLE GROWER	
25	08310-11086	3	TUERCA	NUT	ECROU	

FIG.32

F-03

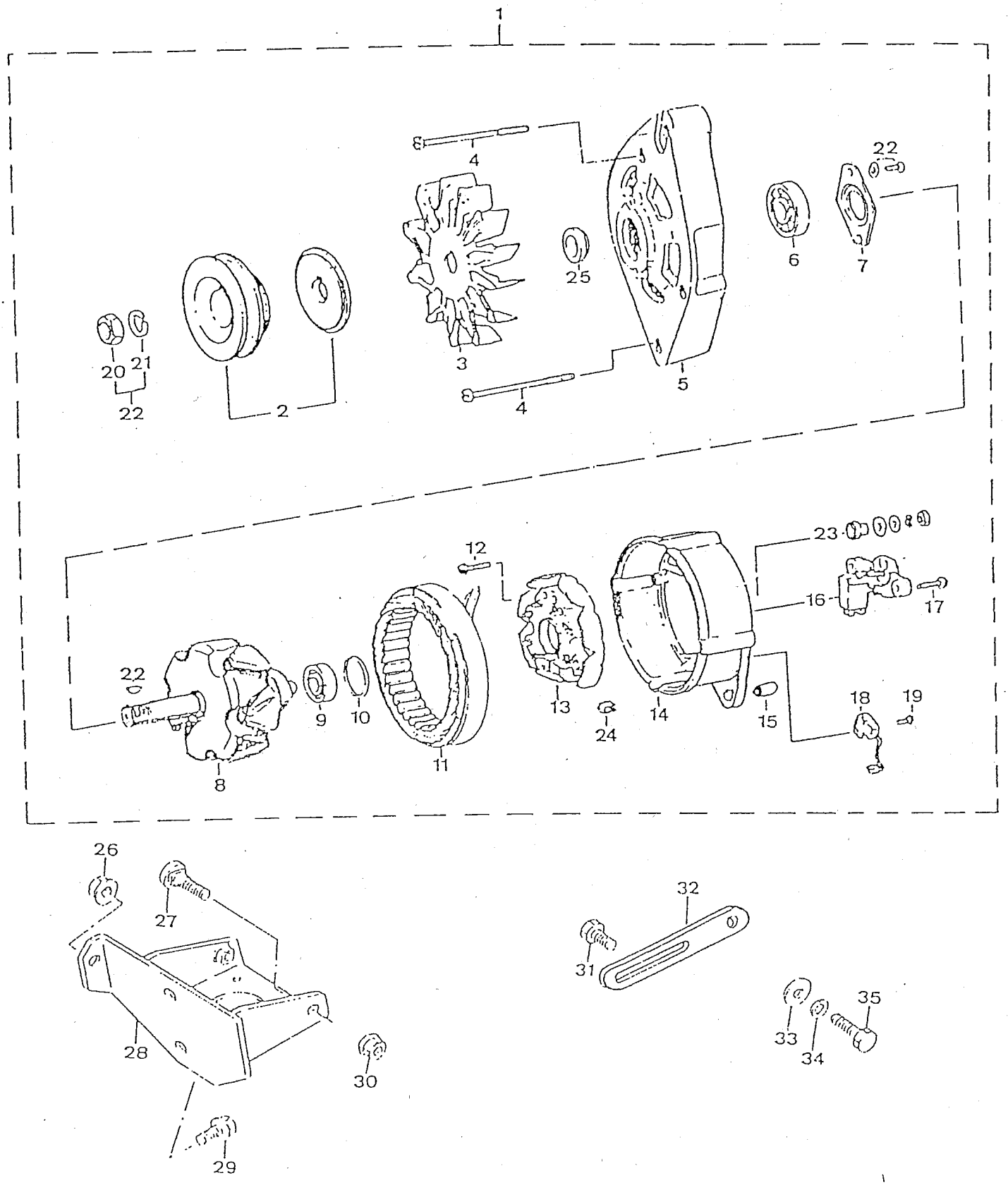
1
4
3
25
5
6
22
7
20
21
22
2
4
12
23
16
17
22
9
10
11
13
24
14
15
18
19
8

26
27
28
29
30

32
31

35
33
34

PUBLICACION N:A01116 GRUPO=SISTEMA ELECTRICO SUBGRUPO=F-03ALTERNADOR
EDICION N: 1 GROUP=ELECTRIC SYSTEM SUBGROUP=F-03ALTERNATOR
GROUPE=SYSTEME ELECTRIQUE SUBGROUPE=F-03ALTERNATEUR

N.FIG PLATE N.FIG	N.PIEZA PARTNUMBER N.PIECE	CAN QTY OUT	DENOMINACION	DESCRIPTION	DENOMINATION	OBSERVACIONES
1	31400B83010	1	C/ALTERNADOR 55A	55A ALTERNATOR ASSY	ENS.ALTERNATEUR 55A	
2	00000A01097	1	POLEA	PULLEY	POULIE	
3	00000A00508	1	VENTILADOR	FAN	VENTILATEUR	
4	00000A01095	4	TIRANTE	STAY	TIGE	
5	00000A00494	1	TAPA LADO POLEA	COVER,PULLEY SIDE	COUVERC.COTE POULIE	
6	00000A00062	1	RODAMIENTO	BEARING	ROULEMENT	
7	00000A00496	1	PLACA RETEN RODAM.	BEARING SEAL PLATE	PLAQUE ARRETOIR ROUL	
8	00000A01092	1	ROTOR	ROTOR	ROTOR	
9	00000A00842	1	RODAMIENTO	BEARING	ROULEMENT	
10	00000A00843	1	CASQUILLO PLASTICO	PLASTIC BUSH	BAGUE PLASTIQUE	
11	00000A01086	1	C/ESTATOR	STATOR ASSY	ENS.STATOR	
12	00000A00845	4	TORNILLO Y ARANDELA	SCREW WITH WASHER	VIS AVEC RONDELLE	
13	00000A00846	1	RECTIFICADOR	RECTIFIER	RECTIFICATEUR	
14	00000A00499	1	TAPA LADO ANILLOS	COVER,RINGS SIDE	COUVERC.COTE ANNEAUX	
15	00000A00506	1	CASQUILLO	BUSH	BAGUE	
16	00000A01094	1	REGULADOR	REGULATOR	REGULATEUR	
17	00000A00831	2	TORNILLO	SCREW	VIS	
18	00000A00837	1	CONDENSADOR	CONDENSATOR	CONDENSATEUR	
19	00000A00833	1	TORNILLO	SCREW	VIS	
20	00000A01096	1	TUERCA EXAGONAL	HEXAGONAL NUT	ECROU HEXAGONAL	
21	00000A01090	1	ARANDELA ONDULADA	WAVED WASHER	RONDELLE ONDULEE	
22	00000A00048	1	JUEGO PIEZAS ROTOR	ROTOR PARTS SET	JEU PIECES ROTOR	
23	00000A01098	1	JUEGO PIEZAS	PARTS SET	JEU PIECES	
24	00000A00507	1	GRAPA	CLAMP	COLLIER	
25	00000A01093	1	ANILLO SEPARADOR	SEPARATING RING	ANNEAU SEPARATEUR	
26	08316A16083	1	TUERCA	NUT	ECROU	
27	09107A08005	1	TORNILLO	SCREW	VIS	
28	17910C82000	1	SOPORTE ALTERNADOR	ALTERNATOR BRACKET	SUPPORT ALTERNATEUR	
29	01507-08203	2	TORNILLO	SCREW	VIS	
30	08316A26086	1	TUERCA	NUT	ECROU	
31	01517-08303	1	TORNILLO	SCREW	VIS	
32	17921A82010	1	TENSOR	TENSIONER	TENDEUR	
33	09160-08080	1	ARANDELA PLANA	FLAT WASHER	RONDELLE PLATE	
34	08321B31086	1	ARANDELA GROWER	GROWER WASHER	RONDELLE GROWER	
35	01107-08253	1	TUERCA	NUT	ECROU	

FIG.32.1

F-03.1

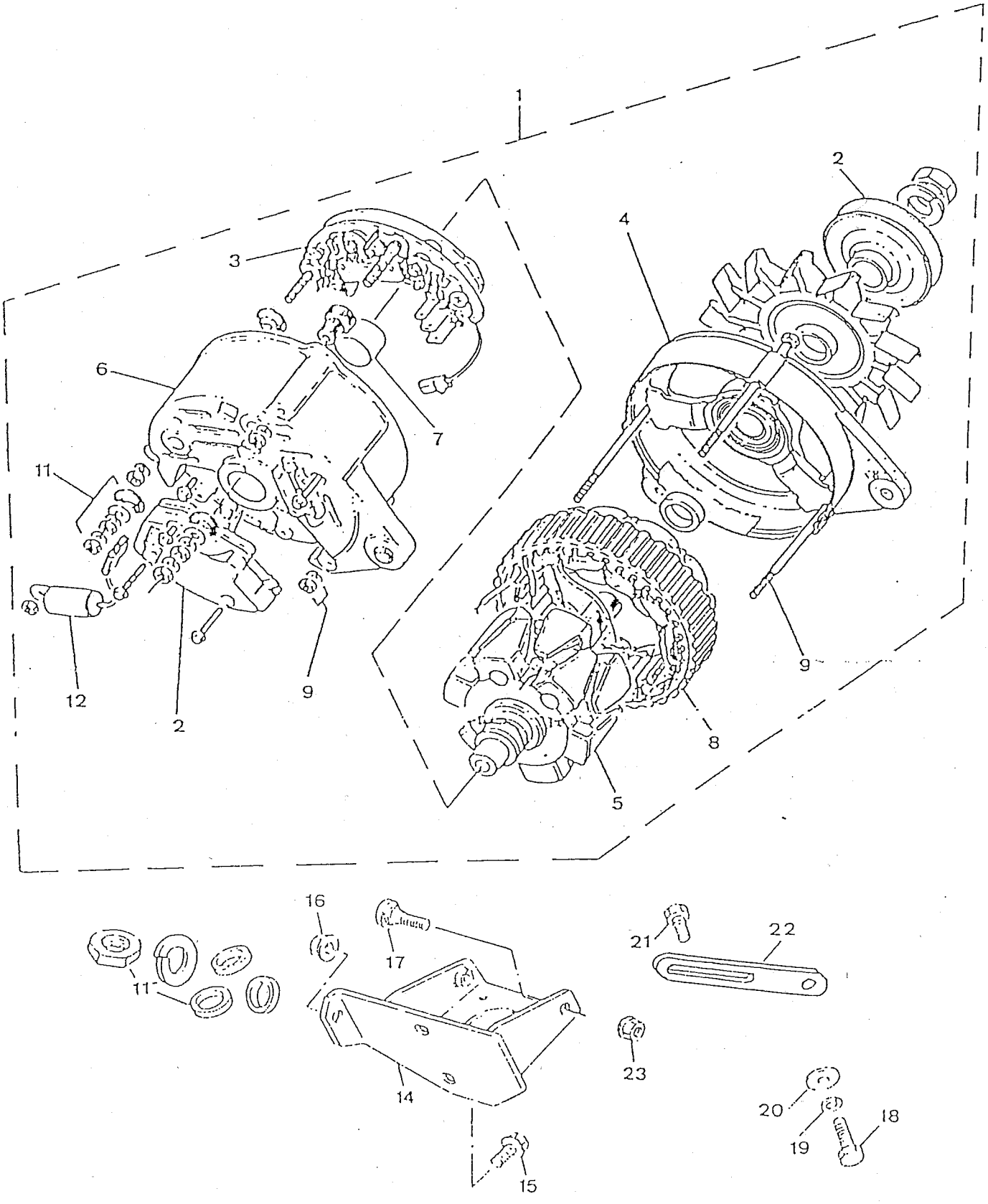

PUBLICACION N:A01116 GRUPO=SISTEMA ELECTRICO SUBGRUPO=F-03.1ALTERNADOR
EDICION N: 1 GROUP=ELECTRIC SYSTEM SUBGROUP=F-03.1ALTERNATOR
GROUPE=SYSTEME ELECTRIQUE SUBGROUPE=F-03.1ALTERNATEUR

N.FIG PLATE N.FIG	N.PIEZA PARTNUMBER N.PIECE	CAN QTY OUT	DENOMINACION	DESCRIPTION	DENOMINATION	OBSERVACIONES
1	31400A83010	1	C/ALTERNADOR 55A	55A ALTERNATOR ASSY	ENS.ALTERNATEUR 55A	'LUCAS'
2	00000A00424	1	REGULADOR-CAJA ESCOB	REGULATOR-BRUSH BOX	REGULATEUR-BOITE BAL	
3	00000A00425	1	RECTIFICADOR	RECTIFIER	RECTIFICATEUR	
4	00000A00426	1	SOPORTE DELANTERO	FRONT BRACKET	SUPPORT AVANT	
5	00000A00427	1	ROTOR	ROTOR	ROTOR	
6	00000A00428	1	SOPORTE TRASERO	REAR BRACKET	SUPPORT ARRIERE	
7	00000A00429	1	CASQUILLO	BUSE	BAGUE	
8	00000A00430	1	INDUCIDO	ARMATURE	INDUIT	
9	00000A00431	1	JUEGO TORNILLO-ARAND	SCREW-WASHER SET	JEU VIS-RONDELLE	
10	00000A00432	1	JUEGO ARANDELA-CASQU	WASHER-BUSH SET	JEU RONDELLE-BAGUE	
11	00000A00433	1	JUEGO TERMINAL	TERMINAL SET	JEU TERMINAL	
12	00000A00434	1	CONDENSADOR	CONDENSATOR	CONDENSATEUR	
13	00000A00435	1	POLEA ALTERNADOR	ALTERNATOR PULLEY	POULIE ALTERNATEUR	
14	17910A82000	1	SOPORTE ALTERNADOR	ALTERNATOR BRACKET	SUPPORT ALTERNATEUR	T1,T2
	17910C82000	1	SOPORTE ALTERNADOR	ALTERNATOR BRACKET	SUPPORT ALTERNATEUR	T3
15	01517-08203	2	TORNILLO	SCREW	VIS	
16	08316A16083	1	TUERCA	NUT	ECROU	
17	09107A08005	1	TORNILLO	SCREW	VIS	
18	01107-08253	1	TORNILLO TENSOR	TENSIONER SCREW	VIS TENDEUR	
19	08321B31086	1	ARANDELA	WASHER	RONDELLE	
20	09160-08030	1	ARANDELA PLANA	FLAT WASHER	RONDELLE PLATE	
21	01517-08203	1	TORNILLO	SCREW	VIS	
22	17921A82010	1	TENSOR	TENSIONER	TENDEUR	
23	08310-11083	1	TUERCA	NUT	ECROU	

FIG.32.2

F-03.2

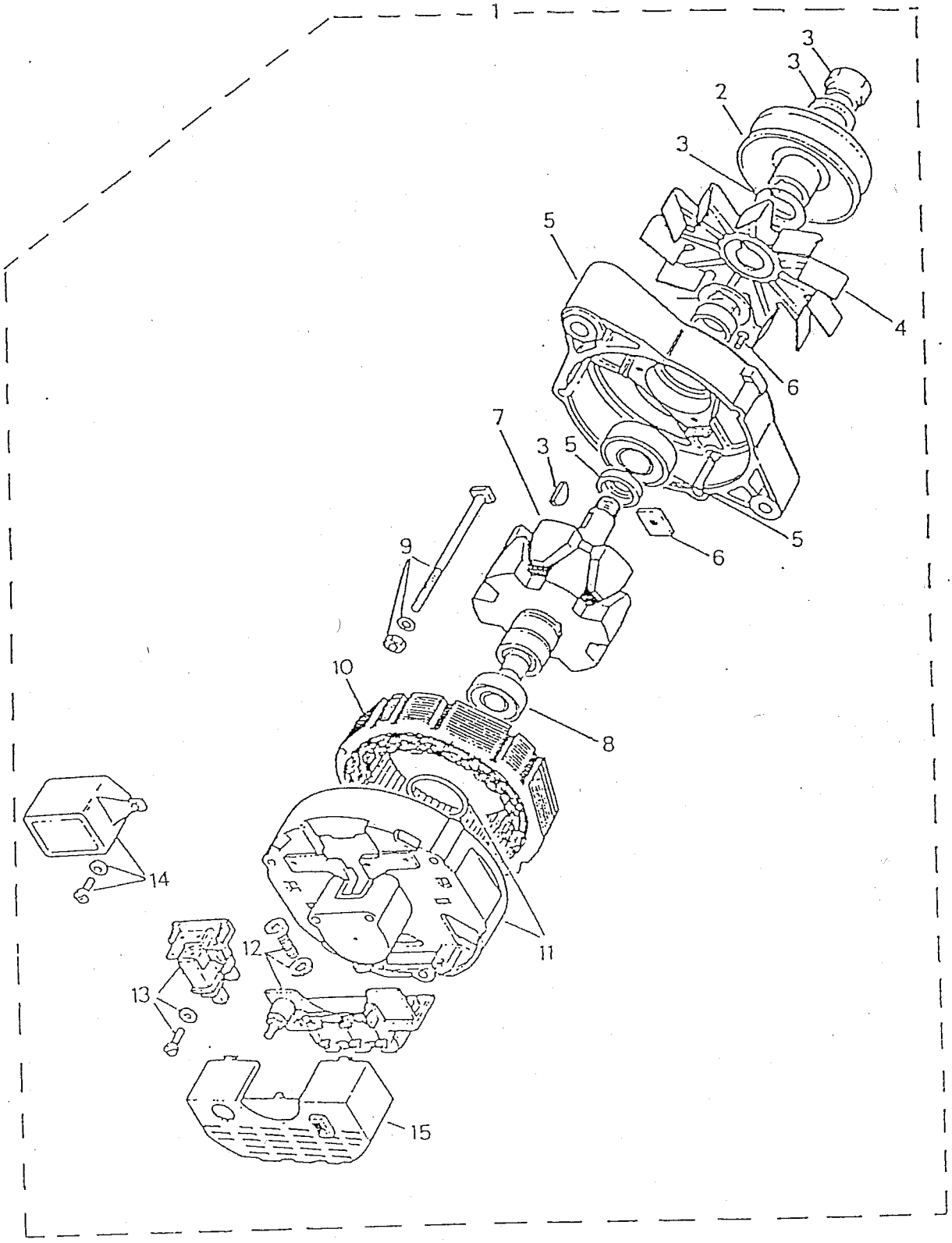

PUBLICACION N:A01116 GRUPO=SISTEMA ELECTRICO SUBGRUPO=F-03.2ALTERNADOR
EDICION N: 1 GROUP=ELECTRIC SYSTEM SUBGROUP=F-03.2ALTERNATOR
GROUPE=SYSTEME ELECTRIQUE SUBGROUPE=F-03.2ALTERNATEUR

N.FIG PLATE N.FIG	N.PIEZA PARTNUMBER N.PIECE	CAN QTY OUT	DENOMINACION	DESCRIPTION	DENOMINATION	OBSERVACIONES
1	30005-00000	1	ALTERNADOR 45A	ALTERNATOR 45A	ALTERNATEUR 45A	'VALEO'
2	00000A00325	1	POLEA	PULLEY	POULIE	
3	00000A00327	1	FIJ.POLEA-VENTIL.	FASTENING,PULLEY-FAN	FIX.POULIE-VENTIL.	
4	00000A00326	1	VENTILADOR	FAN	VENTILATEUR	
5	00000A00322	1	TAPA DELANTERA	FRONT COVER	COUVERCLE AVANT	
6	00000A00323	1	FIJACION RODAMIENTO	BEARING FASTENING	FIXATION ROULEMENT	
7	00000A00319	1	ROTOR COMPLETO	COMPLETE ROTOR	ROTOR COMPLET	
8	00000A00320	1	RODAMIENTO TRASERO	REAR BEARING	ROULEMENT ARRIERE	
9	00000A00324	1	JUEGO TIRANTES	STAYS SET	JEU TIGES	
10	00000A00321	1	ESTATOR	STATOR	STATOR	
11	00000A00318	1	TAPA TRASERA	REAR COVER	COUVERCLE ARRIERE	
12	00000A00317	1	DIODOS	DIODES	DIODES	
13	00000A00315	1	PORTA-ESCOBILLA	BRUSH HOLDER	PORTE-BALAIS	
14	00000A00314	1	REGULADOR	REGULATOR	REGULATEUR	
15	00000A00316	1	TAPA TRASERA	REAR COVER	COUVERCLE ARRIERE	

FIG.33

F-04

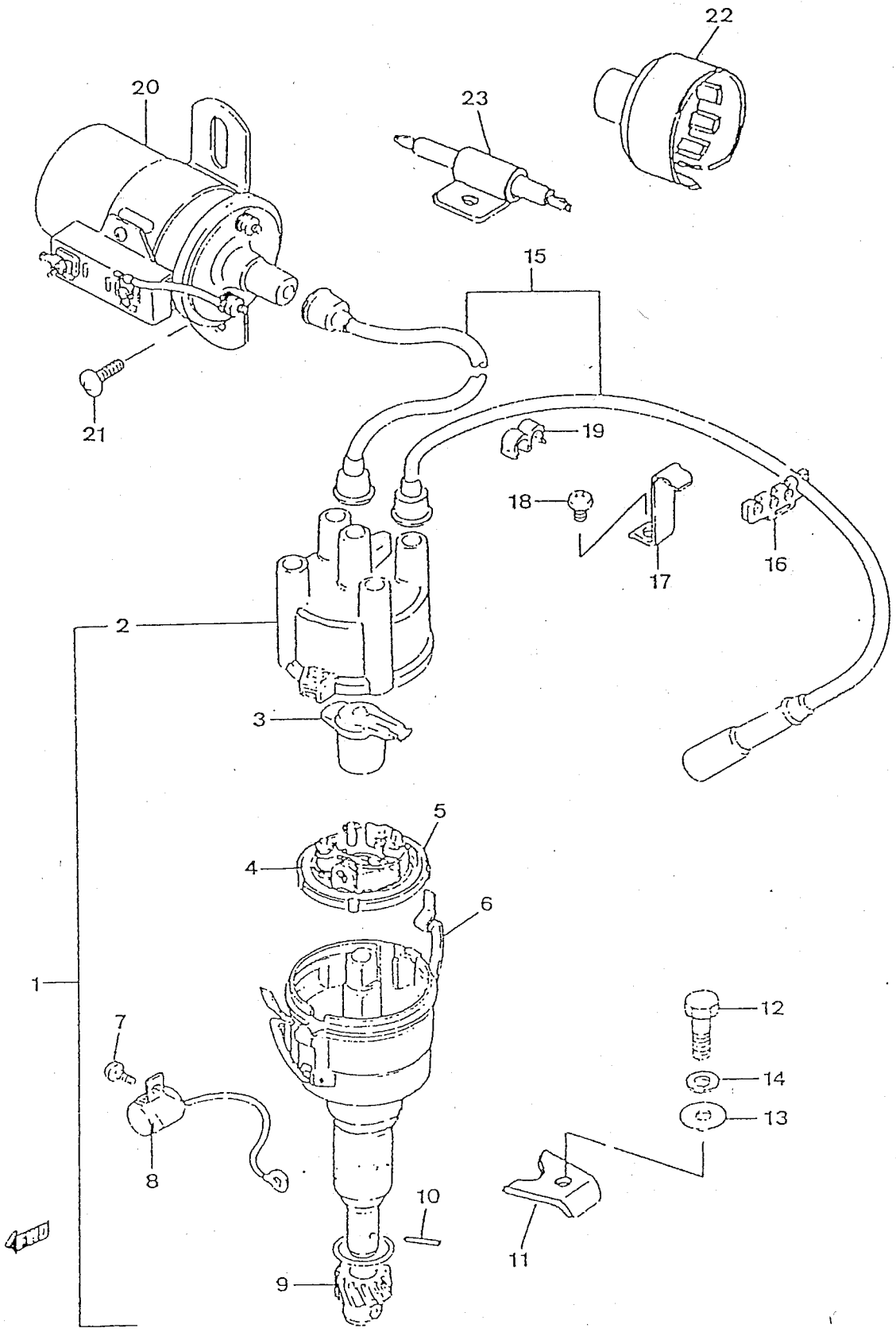

PUBLICACION N:A01116 GRUPO=SISTEMA ELECTRICO SUBGRUPO=F-04DISTRIBUIDOR
EDICION N: 1 GROUP=ELECTRIC SYSTEM SUBGROUP=F-04DISTRIBUTOR
GROUPE=SYSTEME ELECTRIQUE SUBGROUPE=F-04DISTRIBUTEUR

N.FIG PLATE N.FIG	N.PIEZA PARTNUMBER N.PIECE	CAN QTY OUT	DENOMINACION	DESCRIPTION	DENOMINATION	OBSERVACIONES
1	33100A80080	1	C/DISTRIBUIDOR	DISTRIBUTOR ASSY	ENS.DISTRIBUTEUR	
2	00000A00069	1	TAPA	COVER	COUVERCLE	
3	00000A00070	1	ROTOR	ROTOR	ROTOR	
4	00000A00071	1	PLATINO	CONTACT POINTS	PLATINE	
5	00000A00074	1	PLACA ROTOR	ROTOR PLATE	PLAQUE ROTOR	
6	00000A00250	2	MUELLE TAPA	COVER SPRING	RESSORT PLAQUE	
7	00000A00369	1	TORNILLO CONDENSADOR	CONDENSER SCREW	VIS CONDENSATEUR	
8	00000A00072	1	CONDENSADOR	CONDENSER	CONDENSATEUR	
9	00000A00073	1	PINON	PINION	PIGNON	
10	00000A00370	1	PASADOR	PIN	CLAVETTE	
	03111-15126	2	TORNILLO	SCREW	VIS	
11	33100B80080	1	UNETA DISTRIBUIDOR	DISTRIBUTOR CLAW	ONGLET DISTRIBUTEUR	
12	09100-08226	1	TORNILLO	SCREW	VIS	
13	09160-08030	1	ARANDELA PLANA	FLAT WASHER	RONDELLE PLATE	
14	08321B31086	1	ARANDELA GROWER	GROWER WASHER	RONDELLE GROWER	
15	30010-00000	1	CABLE,BOBINA A DISTR	CABLE,COIL TO DISTR.	CABLE,BOBINE A DISTR	D 33121
	30012-00000	1	C/CABLES DE ALTA	HIGH TENS.CABLE ASSY	ENS.CABLE HAUTE TENS	D 33121
	33730A80010	2	CABLE A CILINDRO 1-2	CABLE TO CYLINDER N1	CABLE A CYLINDRE 1-2	
	33750A80010	1	CABLE A CILINDRO N.3	CABLE TO CYLINDER N3	CABLE A CYLINDRE N.3	
	33760A80010	1	CABLE A CILINDRO N.4	CABLE TO CYLINDER N4	CABLE A CYLINDRE N.4	
16	33883-63200	1	BRIDA CABLE	CABLE FLANGE	BRIDE CABLE	
17	33881-80000	1	BRIDA CABLE	CABLE FLANGE	BRIDE CABLE	
18	02112-06086	1	TORNILLO	SCREW	VIS	
19	09408-00033	1	CLIP	CLIP	CLIP	
20	30007-00000	1	C/BOBINA	IGNITION COIL ASSY	ENS.BOBINE ALLUMAGE	H 33120
21	02142-06106	2	TORNILLO	SCREW	VIS	
22	30009-00000	1	TAPA BOBINA	IGNITION COIL COVER	COUVERCLE BOBINE	
23	30008-00000	1	RESISTENCIA BOBINA	COIL RESISTANCE	RESISTANCE BOBINE	H 33120

FIG.34

F-05

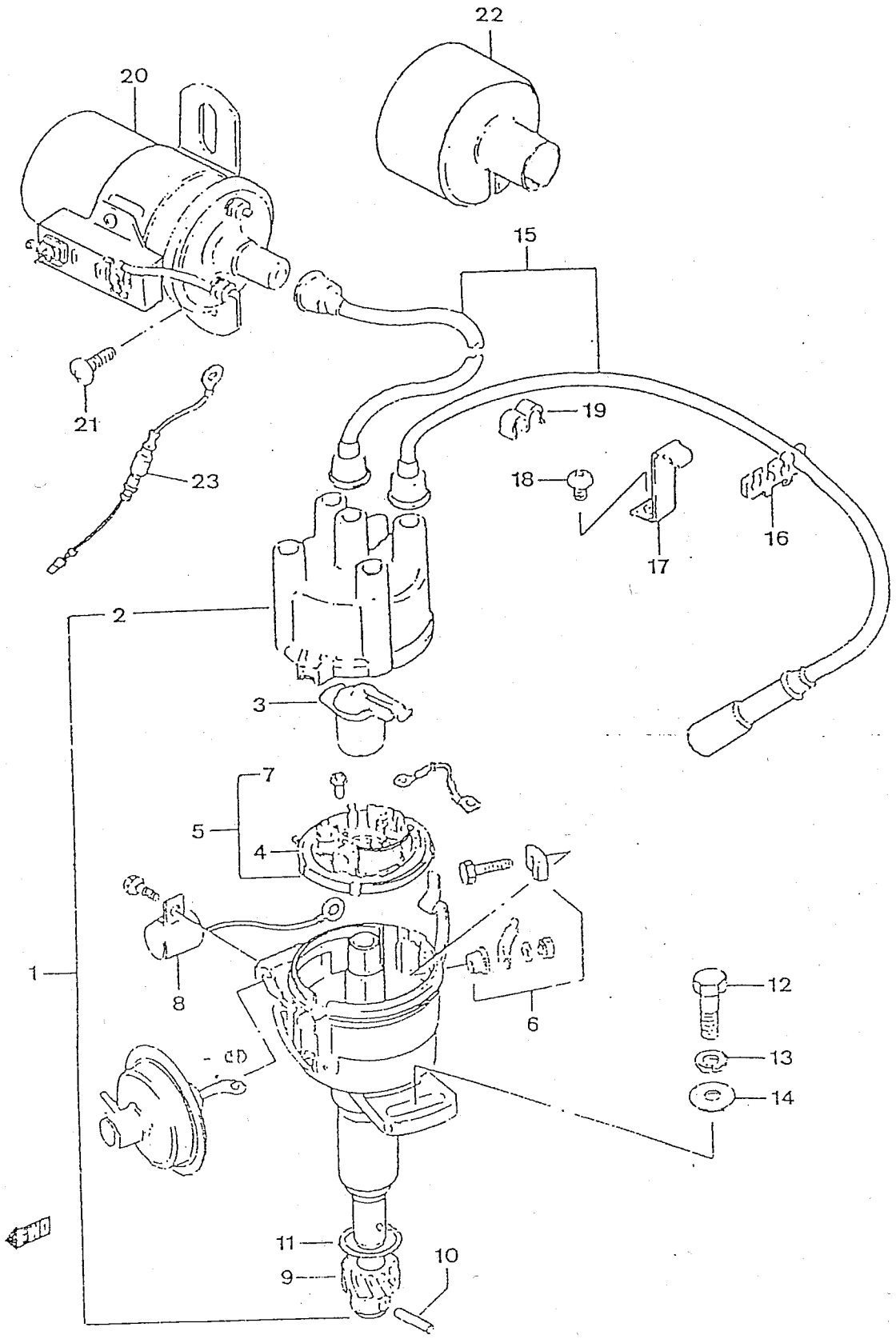

PUBLICACION N:A01116 GRUPO=SISTEMA ELECTRICO SUBGRUPO=F-05DISTRIBUIDOR
EDICION N: 1 GROUP=ELECTRIC SYSTEM SUBGROUP=F-05DISTRIBUTOR
GROUPE=SYSTEME ELECTRIQUE SUBGROUPE=F-05DISTRIBUTEUR

N.FIG PLATE N.FIG	N.PIEZA PARTNUMBER N.PIECE	CAN QTY OUT	DENOMINACION	DESCRIPTION	DENOMINATION	OBSERVACIONES
1	33100-80081	1	C/DISTRIBUIDOR	DISTRIBUTOR ASSY	ENS.DISTRIBUTEUR	
2	33321-75110	1	TAPA	COVER	COUVERCLE	
3	33310-73010	1	ROTOR	ROTOR	ROTOR	
4	33140-74010	1	PLATINOS	CONTACT POINTS	PLATINES	
5	33102-73010	1	PLACA ROTOR	ROTOR PLATE	PLAQUE ROTOR	
6	33210-80030	1	C/TERMINAL	TERMINAL ASSY	ENS.TERMINAL	
7	33151-52011	2	TORNILLO	SCREW	VIS	
8	33261-73010	1	CONDENSADOR	CONDENSER	CONDENSATEUR	
9	33267-73011	1	ENGRANAJE	GEAR	ENGRENAGE	
10	33268-72010	1	PASADOR	PIN	CLAVETTE	
11	33278-52010	1	ANILLO TORICO	O RING	ANNEAU TORIQUE	
12	09100-08226	1	TORNILLO	SCREW	VIS	
13	09160-08030	1	ARANDELA PLANA	FLAT WASHER	RONDELLE PLATE	T1
	09160-08080	1	ARANDELA PLANA	FLAT WASHER	RONDELLE PLATE	T2,T3
14	08321B31086	1	ARANDELA	WASEER	RONDELLE	
15	33700-80031	1	CABLE BOBINA A DISTR	CABLE,COIL TO DISTR.	CABLE,BOBINE A DISTR	T1,T2
	33700-80050	1	C/CABLES DE ALTA	HIGH TENS.CABLE ASSY	ENS.CABLE HAUTE TENS	T1,T2
	33700B80040	1	C/CABLES DE ALTA	HIGH TENS.CABLE ASSY	ENS.CABLE HAUTE TENS	T3
	33710J80031	1	CABLE BOBINA A DISTR	CABLE,COIL TO DISTR.	CABLE,BOBINE A DISTR	T3
	33730-80040	2	CABLE A CILINDRO 1-2	CABLE TO CYLINDER 1	CABLE A CYLINDRE 1-2	T1,T2
	33750-80040	1	CABLE A CILINDRO N.3	CABLE TO CYLINDER N3	CABLE A CYLINDRE N.3	T1,T2
	33750A60A10	1	CABLE A CILINDRO N.4	CABLE TO CYLINDER N4	CABLE A CYLINDRE N.4	T3
	33750A80040	1	CABLE A CILINDRO N.3	CABLE TO CYLINDER N3	CABLE A CYLINDRE N.3	T3
	33760-80040	1	CABLE A CILINDRO N.4	CABLE TO CYLINDER N4	CABLE A CYLINDRE N.4	T1,T2
	33760A60A10	2	CABLE A CILINDRO 1-2	CABLE TO CYLINDER 1	CABLE A CYLINDRE 1-2	T3
16	33883-63200	1	BRIDA CABLE	CABLE FLANGE	BRIDE CABLE	
17	33881-80000	1	BRIDA	FLANGE	BRIDE	
18	02112-06086	1	TORNILLO	SCREW	VIS	
19	09408-00033	1	CLIP	CLIP	CLIP	
20	33410-77020	1	C/BOBINA	IGNITION COIL ASSY	ENS.BOBINE ALLUMAGE	
21	02142-06106	2	TORNILLO	SCREW	VIS	
22	30009-00000	1	TAPA BOBINA	IGNITION COIL COVER	COUVERCLE BOBINE	
23	33459A78130	1	C/CABLE CON DIODOS	CABLE ASSY W/DIODES	ENS.CABLE AVEC DIODE	

FIG.35

F-06

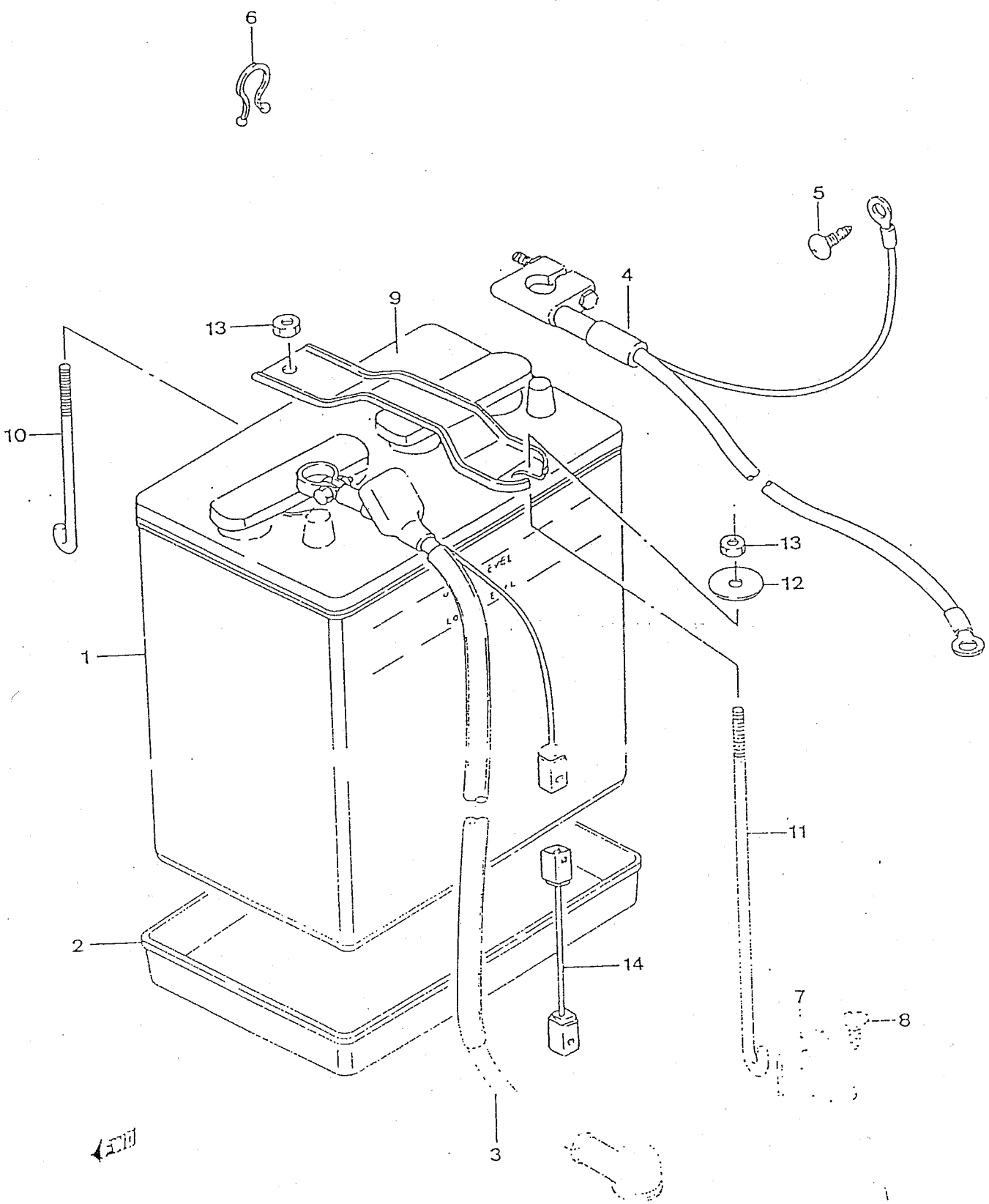

PUBLICACION N:A01116 GRUPO=SISTEMA ELECTRICO SUBGRUPO=F-06BATERIA
EDICION N: 1 GROUP=ELECTRIC SYSTEM SUBGROUP=F-06BATTERY
GROUPE=SYSTEME ELECTRIQUE SUBGROUPE=F-06BATTERIE

N.FIG PLATE N.FIG	N.PIEZA PARTNUMBER N.PIECE	CAN QTY OUT	DENOMINACION	DESCRIPTION	DENOMINATION	OBSERVACIONES
1	00000A00811	1	BATERIA TUDOR 45A	45A TUDOR BATTERY	BATTERIE TUDOR 45A	
2	33661A51020	1	BANDEJA BATERIA	BATTERY TRAY	PLATEAU BATTERIE	
3	33800A70A00	1	CABLE POSITIVO	POSITIVE CABLE	CABLE POSITIF	H 121456
	33800C70A00	1	CABLE POSITIVO	POSITIVE CABLE	CABLE POSITIF	D 121457
4	33850A70A00	1	CABLE NEGATIVO	GROUND CABLE	CABLE NEGATIF	H 121456
	33850C70A00	1	CABLE NEGATIVO	GROUND CABLE	CABLE NEGATIF	D 121457
5	09115-06001	1	TORNILLO	SCREW	VIS	T2
	09129-06002	1	TORNILLO	SCREW	VIS	
6	09408-00012	1	ABRAZADERA	CLAMP	COLLIER	
7	35227-00000	1	C/SOPORTE TIRANTE	STAY BRACKET ASSY	E/SUPPORT ENTRETOISE	D 67932
	72525-80001	1	C/SOPORTE TIRANTE	STAY BRACKET ASSY	E/SUPPORT ENTRETOISE	H 67931
8	02142-06106	1	TORNILLO	SCREW	VIS	H 67931
9	72511A60A00	1	BANDA BATERIA	BATTERY BAND	BANDE BATTERIE	T3
	72511A78000	1	BANDA BATERIA	BATTERY BAND	BANDE BATTERIE	T1,T2
10	72521A80000	1	VARILLA FIJ.BATERIA	BATTERY FIXING ROD	TIGE FIXA.BATTERIE	D 104932
	75221-80000	1	VARILLA FIJ.BATERIA	BATTERY FIXING ROD	TIGE FIXA.BATTERIE	H 104931
11	63461-70400	1	VARILLA FIJ.BATERIA	BATTERY FIXING ROD	TIGE FIXA.BATTERIE	H 104931
	63461A70400	1	VARILLA FIJ.BATERIA	BATTERY FIXING ROD	TIGE FIXA.BATTERIE	D 104932
12	09160-05013	1	ARANDELA	WASHER	RONDELLE	
13	08310-11056	2	TUERCA	NUT	ECROU	
14	36740A80000	1	CABLE FUSIBLE PRINC.	MAIN FUSE CABLE	CABLE FUSIBLE PRINC.	H 121456

FIG.36

F-07

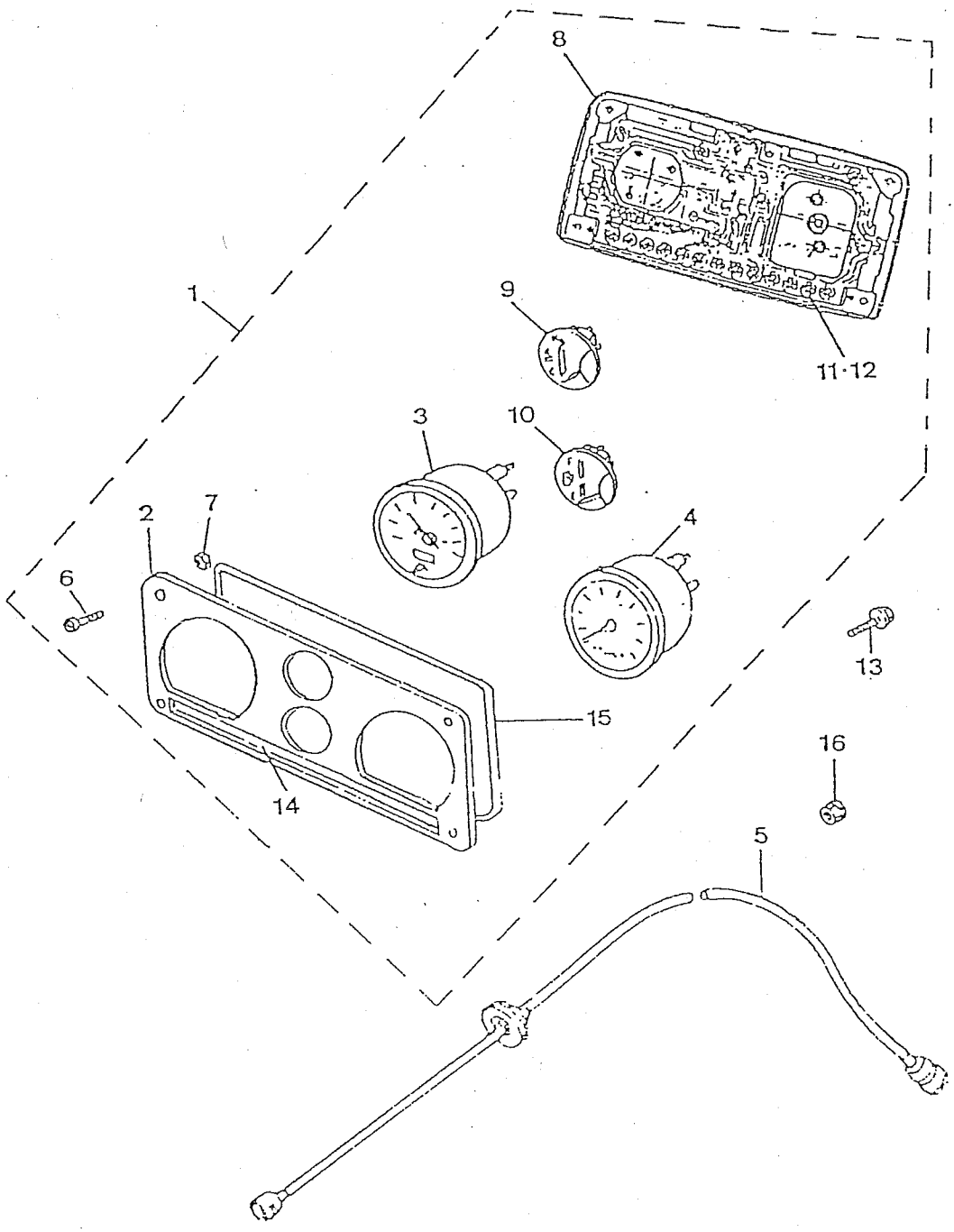

PUBLICACION N:A01116 GRUPO=SISTEMA ELECTRICO SUBGRUPO=F-07PANEL INSTRUM.
EDICION N: 1 GROUP=ELECTRIC SYSTEM SUBGROUP=F-07DASH BOARD
GROUPE=SYSTEME ELECTRIQUE SUBGROUPE=F-07TABLEAU BORD

N.FIG PLATE N.FIG	N.PIEZA PARTNUMBER N.PIECE	CAN QTY OUT	DENOMINACION	DESCRIPTION	DENOMINATION	OBSERVACIONES
1	34100B71A50	1	C/PANEL INSTRUMENTOS	DASH BOARD ASSY	ENS.TABLEAU DE BORD	
2	00000A00547	1	TAPA PANEL	DASH BOARD COVER	COUVERCLE TAB.BORD	
3	00000A00541	1	VELOCIMETRO	SPEEDOMETER	VELOCIMETRE	
4	00000A00661	1	REGLETA	LEAD	REGLETTE	
5	34910A80C30	1	CABLE VELOCIMETRO	SPEEDOMETER CABLE	CABLE VELOCIMETRE	
6	03121-05165	2	TORNILLO	SCREW	VIS	
7	09148-05013	2	TUERCA	NUT	ECROU	
8	00000A00544	1	CIRCUITO IMPRESO	PRINTED CIRCUIT	CIRCUIT IMPRIME	
9	00000A00542	1	INDICADOR TEMPERAT.	TEMPERATURE GAUGE	INDICATEUR TEMPERAT.	
10	00000A00543	1	INDICADOR COMB.	FUEL GAUGE	INDICATEUR CARBURANT	
11	00000A00546	1	PORTA-LAMPARA 2W	SOCKET 2W	PORTE LAMPE 2W	
12	00000A00545	16	PORTA-LAMPARA 1,2W	SOCKET 1,2W	PORTE LAMPE 1,2W	
13	03141-05165	2	TORNILLO	SCREW	VIS	
14	09148A05013	2	CRISTAL	GLASS	VITRE	
15	00000A00635	1	CRISTAL	GLASS	VITRE	
16	09148A05005	2	TUERCA	NUT	ECROU	

FIG.37

F-08

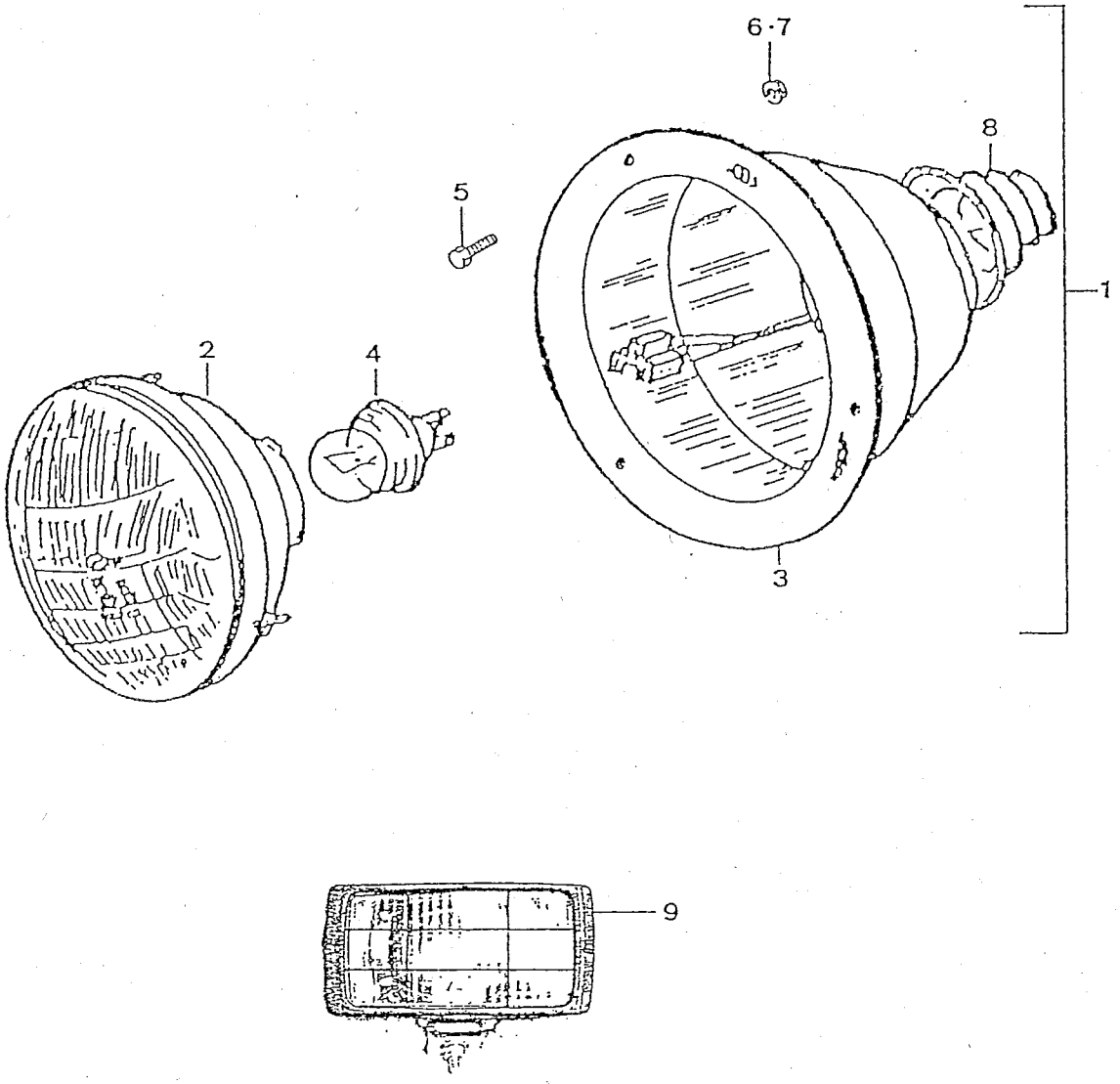

PUBLICACION N:A01116 GRUPO=SISTEMA ELECTRICO SUBGRUPO=F-08FARO DELANTERO
EDICION N: 1 GROUP=ELECTRIC SYSTEM SUBGROUP=F-08HEADLIGHT
GROUPE=SYSTEME ELECTRIQUE SUBGROUPE=F-08PHARE

N.FIG PLATE N.FIG	N.PIEZA PARTNUMBER N.PIECE	CAN QTY OUT	DENOMINACION	DESCRIPTION	DENOMINATION	OBSERVACIONES
1	35100B79000	2	FARO PRINCIPAL	MAIN LIGHT	PHARE PRINCIPAL	
	35191-00000	2	FARO PRINCIPAL	MAIN LIGHT	PHARE PRINCIPAL	H 126678-E04
2	00000A00092	2	BLOQUE OPTICO	BLOC OPTIQUE	BLOC OPTIQUE	
3	00000A00484	2	CARCAZA FARO	LIGHT HOUSING	LOGEMENT PHARE	
4	00000A00096	2	LAMPARA 12V 45W	BULB 12V 45W	LAMPE 12V 45W	
	00000A00243	2	LAMPARA AMARILLA	YELLOW LAMP	LAMPE JAUNE	
5	02112-05126	6	TORNILLO	SCREW	VIS	
6	08321A31056	6	ARANDELA GROWER	GROWER WASHER	RONDELLE GROWER	
7	08310-11056	6	TUERCA	NUT	ECROU	
8	00000A00485	2	GUARDAPOLVOS	BOOT	PARE-POUSSIERE	
9	00000A01043	2	FARO ANTINIEBLA	ANTIFOG LIGHT	FEU ANTIBROUILLARD	'PLAYA'

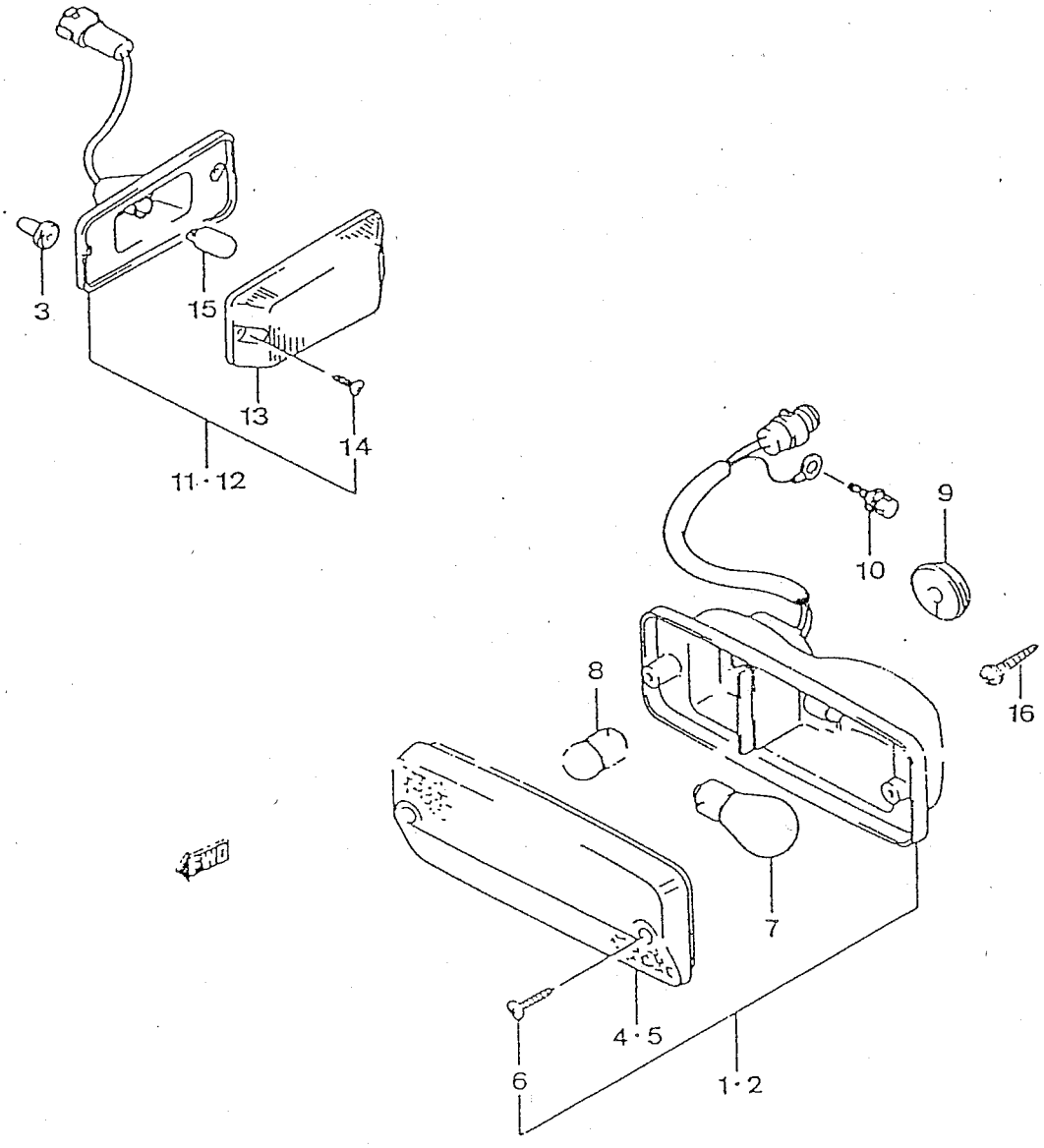
3
15
13
14
11·12
10
9
8
16
7
4·5
6
1·2

PUBLICACION N:A01116 GRUPO=SISTEMA ELECTRICO SUBGRUPO=F-09PILOTO DELANTERO
EDICION N: 1 GROUP=ELECTRIC SYSTEM SUBGROUP=F-09FRONT LIGHT
GROUPE=SYSTEME ELECTRIQUE SUBGROUPE=F-09FEU AVANT

N.FIG PLATE N.FIG	N.PIEZA PARTNUMBER N.PIECE	CAN QTY OUT	DENOMINACION	DESCRIPTION	DENOMINATION	OBSERVACIONES
1	35601C80032	1	C/INTERMIT.DEL.L/D	FR.FLASHER ASSY,R/H	ENS.CLIGNOT.AV.C/D	H 121456
	35601D80032	1	C/INTERMIT.DEL.L/D	FR.FLASHER ASSY,R/H	ENS.CLIGNOT.AV.C/D	D 121457
2	35602C80032	1	C/INTERMIT.DEL.L/I	FR.FLASHER ASSY,L/H	ENS.CLIGNOT.AV.C/G	H 121456
	35602D80032	1	C/INTERMIT.DEL.L/I	FR.FLASHER ASSY,L/H	ENS.CLIGNOT.AV.C/G	D 121457
3	09159B04002	4	TUERCA	NUT	ECROU	
4	00000A00098	1	TRANSPARENCIA,L/D	PLASTIC,R/H	TRANSPARENCE,C/D	
5	00000A00097	1	TRANSPARENCIA,L/I	PLASTIC,L/H	TRANSPARENCE,C/G	
6	00000A00099	2	TORNILLO	SCREW	VIS	
7	00000A00101	1	LAMPARA 12V 21W	BULB 12V 21W	LAMPE 12V 21W	
8	00000A00102	1	LAMPARA 12V 5W	BULB 12V 5W	LAMPE 12V 5W	
9	09308-08007	2	PASACABLES	GROMMET	PASSE-CABLES	
10	09115-06001	2	TORNILLO FIJAC.MASA	SCREW	VIS	T3
11	36410A70A00	1	PILOTO INTERMIT.L/D	FLASHER, R/H	CLIGNOTANT,C/D	H 121456
	36410D70A00	1	PILOTO INTERMIT.L/D	FLASHER, R/H	CLIGNOTANT,C/D	D 121457
12	36410D70A00	1	PILOTO INTERMIT.L/I	FLASHER, L/H	CLIGNOTANT,C/G	D 121457
	36430A70A00	1	PILOTO INTERMIT.L/I	FLASHER, L/H	CLIGNOTANT,C/G	H 121456
13	36412-78400	2	PLASTICO INTERMIT.	FLASHER PLASTIC	TRANSPARENCE CLIGNO.	
14	03112-04169	1	TORNILLO	SCREW	VIS	
15	00000A00148	2	LAMPARA	BULB	LAMPE	
16	03111-05126	2	TORNILLO	SCREW	VIS	T1,T2
	08322-21056	2	ARANDELA PLANA	FLAT WASHER	RONDELLE PLATE	T1,T2

FIG.39

F-10

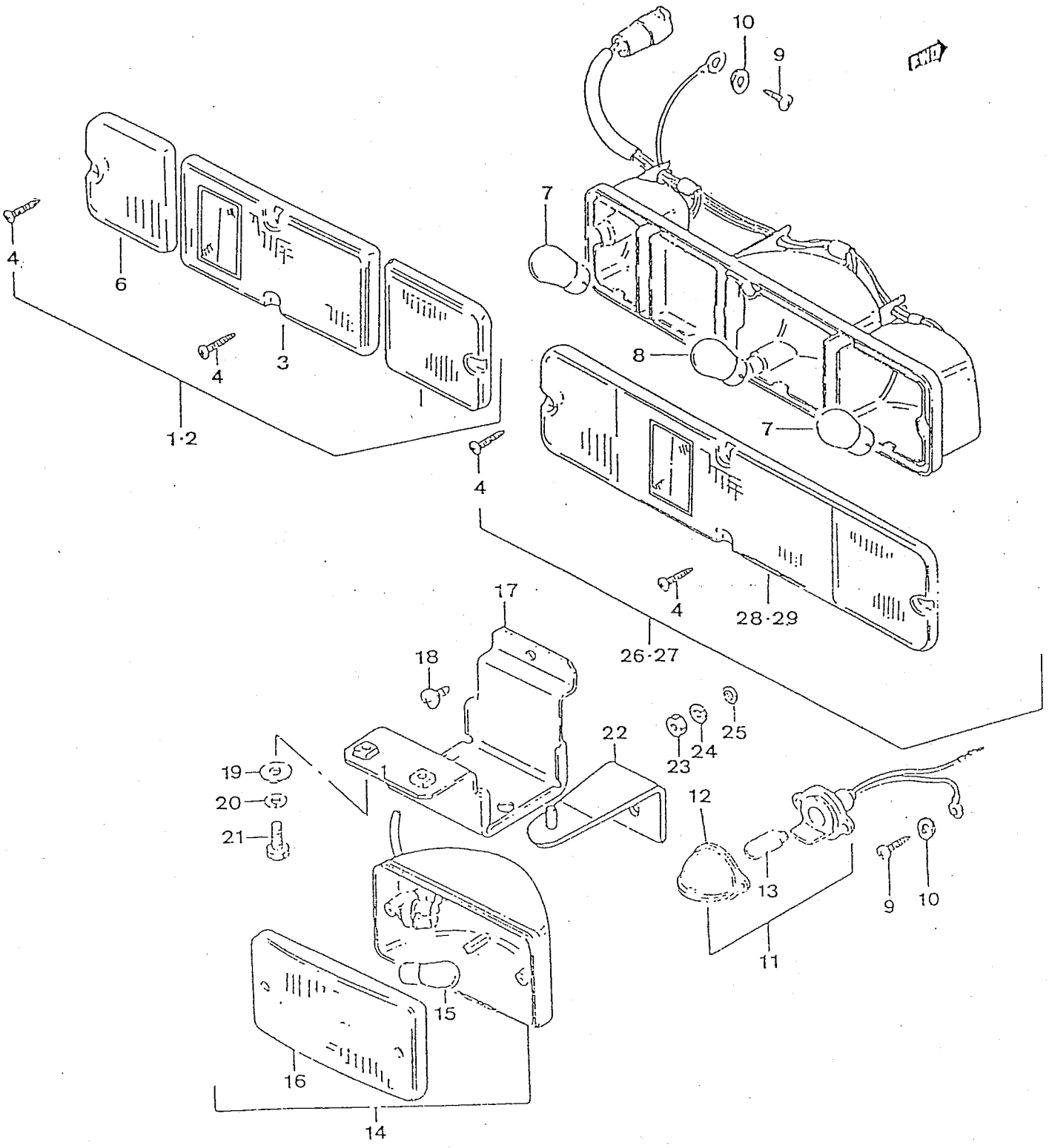

10
9
7
4
6
3
4
1·2
8
7
4
4
28·29
26·27
17
18
25
24
23
22
19
20
21
12
13
9
10
11
15
16
14

PUBLICACION N:A01116 GRUPO=SISTEMA ELECTRICO SUBGRUPO=F-10PILOTO TRASERO
EDICION N: 1 GROUP=ELECTRIC SYSTEM SUBGROUP=F-10REAR LIGHT
GROUPE=SYSTEME ELECTRIQUE SUBGROUPE=F-10FEU ARRIERE

N.FIG PLATE N.FIG	N.PIEZA PARTNUMBER N.PIECE	CAN QTY OUT	DENOMINACION	DESCRIPTION	DENOMINATION	OBSERVACIONES
1	35243-00000	1	PILOT.INTER.TRAS.L/D	REAR FLASHER,R/H	CLIGNOTANT ARR.C/D	H 121456
	35603A80013	1	PILOT.INTER.TRAS.L/D	REAR FLASHER,R/H	CLIGNOTANT ARR.C/D	D 121457
2	35244-00000	1	PILOT.INTER.TRAS.L/I	REAR FLASHER,L/H	CLIGNOTANT ARR.C/G	H 121456
	35604A80013	1	PILOT.INTER.TRAS.L/I	REAR FLASHER,L/H	CLIGNOTANT ARR.C/G	D 121457
3	00000A00103	1	TRANSPARENC.ROJA,L/I	RED PLASTIC,L/H	TRANSPAREN.ROUGE,C/G	H 121456
	00000A00105	1	TRANSPARENC.ROJA,L/D	RED PLASTIC,R/H	TRANSPAREN.ROUGE,C/D	H 121456
4	00000A00099	8	TORNILLO	SCREW	VIS	
5	00000A00106	2	TRANSPARENCIA AMBAR	AMBER PLASTIC	PLASTIQUE AMBRE	H 121456
6	00000A00107	2	TRANSPARENC.INCOLORO	PLASTIC,NO COLOUR	TRANSPARENCE INCOLOR	H 121456
7	00000A00101	4	LAMPARA 12 V	BULB 12 V	LAMPE 12 V	
8	00000A00109	2	LAMPARA 12 V	BULB 12 V	LAMPE 12 V	
9	03111-05126	2	TORNILLO FIJAC.MASA	FIXING SCREW	VIS FIXATION	T1,T2
	09139-05028	2	TORNILLO FIJAC.MASA	FIXING SCREW	VIS FIXATION	T3
10	08322-21056	2	ARANDELA	WASHER	RONDELLE	T1,T2
11	35910B80011	2	LUZ MATRICULA	LICENSE LIGHT	FEU PLAQUE IMMATRI.	H 121456
	35910C80011	2	LUZ MATRICULA	LICENSE LIGHT	FEU PLAQUE IMMATRI.	D 121457
12	00000A00149	2	PLASTICO	PLASTIC	TRANSPARENCE	
13	00000A00148	2	LAMPARA	BULB	LAMPE	
14	36570A79000	1	LUZ ANTINIEBLA TRAS.	REAR ANTIFOG LIGHT	ANTI-BROUILLARD ARR.	H 121456
15	00000A00101	1	LAMPARA 12 V	BULB 12 V	LAMPE 12 V	H 121456
16	00000A00110	1	TRANSPARENC.ANTINIEB	ANTIFOG PLASTIC	TRANSPAREN.ANTI-BROU	H 121456
17	36580-80001	1	SOPORTE LUZ ANTINIEB	ANTIFOG BRACKET	SUPPORT ANTI-BROUILL	H 121456
18	01104-06166	2	TORNILLO	SCREW	VIS	H 121456
19	09160-06016	2	ARANDELA PLANA	FLAT WASHER	RONDELLE PLATE	H 121456
20	08321A31066	2	ARANDELA	WASHER	RONDELLE	H 121456
21	03141-06126	1	TORNILLO	SCREW	VIS	H 121456
22	36570C79000	1	SOPORTE PILOTO	LIGHT BRACKET	SUPPORT FEU	H 121456
23	08310-11086	1	TUERCA	NUT	ECROU	H 121456
24	02005-00000	1	ARANDELA	WASHER	RONDELLE	H 121456
25	02007-00000	1	ARANDELA ESTRELLA	STAR WASHER	RONDELLE EN ETOILE	H 121456
26	35243-00000	1	C/PILOTO TRAS.L/D	REAR LIGHT ASSY,R/H	ENS.FEU ARR.C/D	D 121457
	35603A80013	1	C/PILOTO TRAS.L/D	REAR LIGHT ASSY,R/H	ENS.FEU ARR.C/D	T3
27	35244-00000	1	C/PILOTO TRAS.L/I	REAR LIGHT ASSY,L/H	ENS.FEU ARR.C/G	D 121457
	35604A80013	1	C/PILOTO TRAS.L/I	REAR LIGHT ASSY,L/H	ENS.FEU ARR.C/G	T3
28	00000A00694	1	TRANSPARENCIA,L/D	PLASTIC,R/H	TRANSPARENCE,C/D	D 121457
29	00000A00695	1	TRANSPARENCIA,L/I	PLASTIC,L/H	TRANSPARENCE,C/G	D 121457
30	09407A23401	1	ABRAZADERA	CLAMP	COLLIER	T2,T3-NOT SHOWN

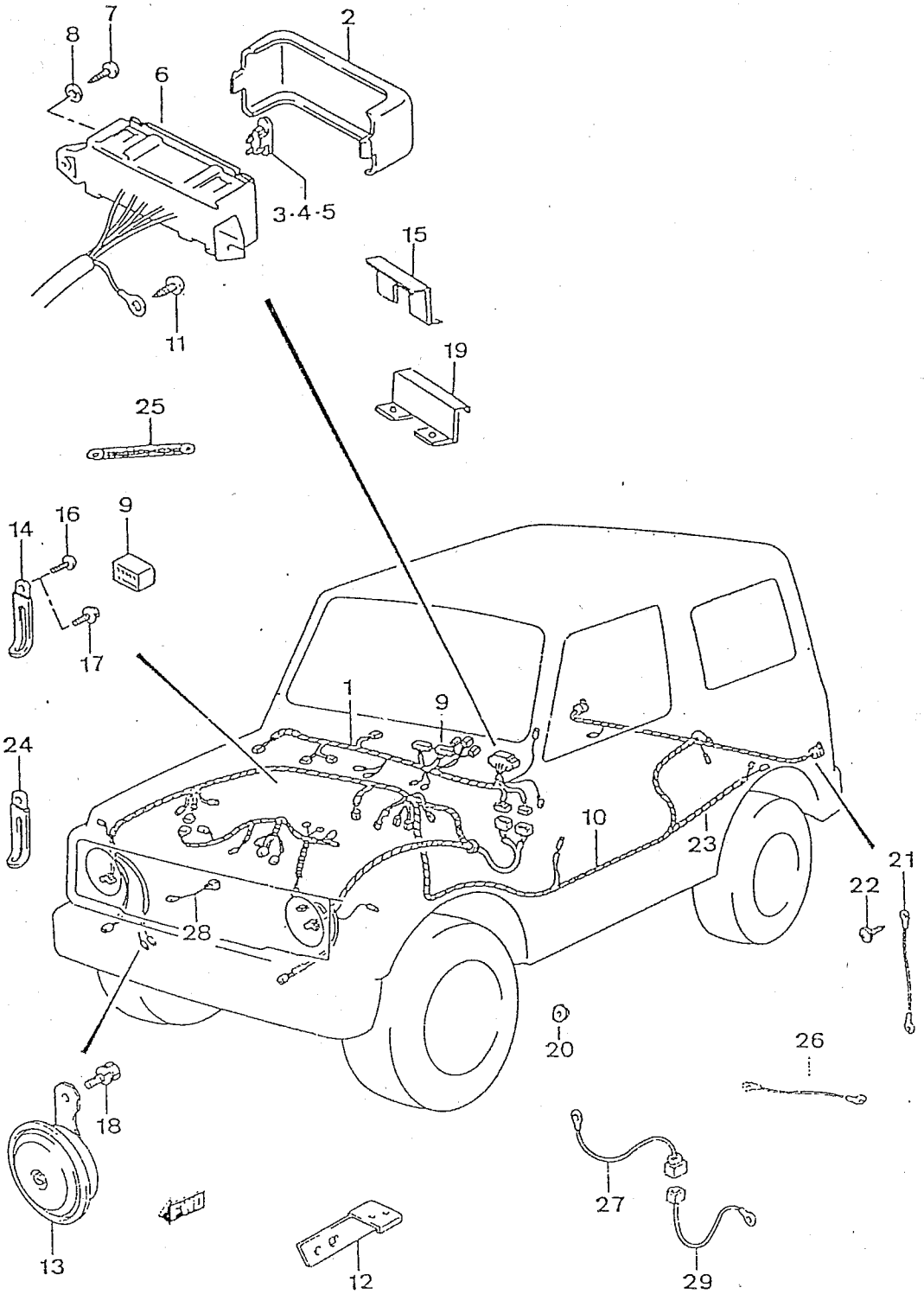
8
7
2
6
3·4·5
15
11
19
25
16
9
14
17
1
9
24
10
23
21
22
28
20
26
18
27
13
12
29

PUBLICACION N:A01116 GRUPO=SISTEMA ELECTRICO SUBGRUPO=F-11CABLEADO
EDICION N: 1 GROUP=ELECTRIC SYSTEM SUBGROUP=F-11WIRING
GROUPE=SYSTEME ELECTRIQUE SUBGROUPE=F-11FAISCEAU

N.FIG PLATE N.FIG	N.PIEZA PARTNUMBER N.PIECE	CAN QTY OUT	DENOMINACION	DESCRIPTION	DENOMINATION	OBSERVACIONES
1	36610-84C20	1	C/CABLEADO N.1	WIRING ASSY,N.1	ENS.FAISCEAU,N.1	D 121457
	36610A70A30	1	C/CABLEADO N.1	WIRING ASSY,N.1	ENS.FAISCEAU,N.1	H 93259
	36610B70A30	1	C/CABLEADO N.1	WIRING ASSY,N.1	ENS.FAISCEAU,N.1	D 93260-H.121456
2	35163-00000	1	TAPA CAJA FUSIBLES	FUSES BOX COVER	COUVERC.BOITE FUSIB.	T1,T2
	36717-80C01	1	TAPA CAJA FUSIBLES	FUSES BOX COVER	COUVERC.BOITE FUSIB.	T3
3	35154-00000	5	FUSIBLE 5A	5A FUSE	FUSIBLE 5A	
	35157-00000	1	FUSIBLE 20A	20A FUSE	FUSIBLE 20A	
4	35155-00000	6	FUSIBLE 10A	10A FUSE	FUSIBLE 10A	
5	35156-00000	6	FUSIBLE 15A	15A FUSE	FUSIBLE 15A	
6	35160-00000	1	PLACA CIRCUITO IMPR.	PRINT.CIRCUIT PLATE	PLAQUE CIRC.IMPRIME	T1,T2
7	03111-05126	2	TORNILLO	SCREW	VIS	T3
	03211-04126	4	TORNILLO	SCREW	VIS	T1,T2
8	02008-00000	4	ARANDELA	WASHER	RONDELLE	T1,T2
	08322-11056	2	ARANDELA PLANA	FLAT WASHER	RONDELLE PLATE	T3
9	35197-00000	1	CAJA DIODOS	DIODES BOX	BOITE DIODES	
10	36620-84C30	1	C/CABLEADO N.2	WIRING ASSY,N.2	ENS.FAISCEAU,N.2	T2,T3
	36620D70A20	1	C/CABLEADO N.2	WIRING ASSY,N.2	ENS.FAISCEAU,N.2	T1
11	09129-06002	1	TORNILLO MASA	EARTH SCREW	VIS A MASSE	
12	36625-83000	1	SOPORTE	BRACKET	SUPPORT	T3
13	38500A80100	1	BOCINA GRAVE	LOW TONE HORN	KLAXON GRAVE	
14	09404A06415	6	ABRAZADERA	CLAMP	COLLIER	
15	35159-00000	1	SOP.SUP.CAJA FUSIBLE	FUSE BOX UP.BRACKET	SUPP.SUP.BOITE FUSIB	T1,T2

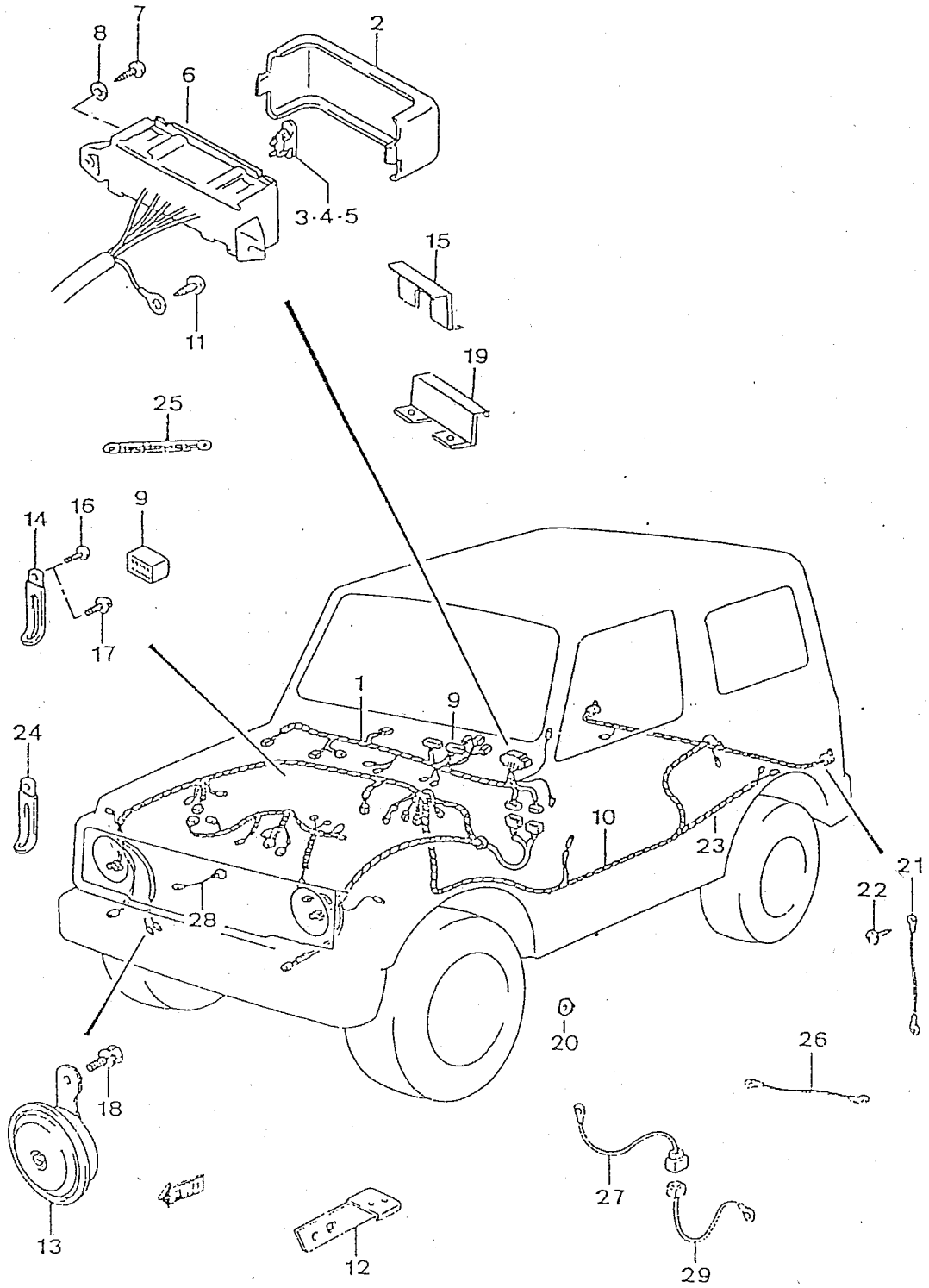
8
7
6
2
3·4·5
11
15
19
25
14
16
9
17
1
9
24
10
23
21
22
28
20
26
18
27
13
12
29

PUBLICACION N:A01116 GRUPO=SISTEMA ELECTRICO SUBGRUPO=F-11.1CABLEADO
EDICION N: 1 GROUP=ELECTRIC SYSTEM SUBGROUP=F-11.1WIRING
GROUPE=SYSTEME ELECTRIQUE SUBGROUPE=F-11.1FAISCEAU

N.FIG PLATE N.FIG	N.PIEZA PARTNUMBER N.PIECE	CAN QTY OUT	DENOMINACION	DESCRIPTION	DENOMINATION	OBSERVACIONES
16	03141-04126	14	TORNILLO	SCREW	VIS	T1,T2
	03141-05128	11	TORNILLO	SCREW	VIS	T3
17	09115-06001	2	TORNILLO MASA	EARTH SCREW	VIS A MASSE	
18	01104-08126	1	TORNILLO	SCREW	VIS	
	08321B31086	1	ARANDELA	WASHER	RONDELLE	
19	35158-00000	1	SOP.INF.CAJA FUSIBLE	FUSE BOX LOW.BRACKET	SUPP.INF.BOITE FUSIB	T1,T2
20	35070-00000	2	PASACABLE	GROMMET	PASSE-CABLES	JH
21	36821-80000	1	CABLEADO MASA	EARTH WIRING	FAISCEAU A MASSE	T3
	36821A80000	1	CABLEADO MASA	EARTH WIRING	FAISCEAU A MASSE	T1,T2
22	03141-05126	1	TORNILLO	SCREW	VIS	
23	36845-84C00	1	C/CABLEADO LIMP.TRAS	RR WIPER WIRING A/	E/FAISC.ESSUI.GL.ARR	
	36845-84C10	1	C/CABLEADO LIMP.TRAS	RR WIPER WIRING A/	E/FAISC.ESSUI.GL.ARR	JH
24	09404A08405	3	ABRAZADERA	CLAMP	COLLIER	
25	35174-00000	1	ANTIPARASITARIOS	SOUNDPROOF	ANTI-PARASITES	
26	162536	1	CABLE MASA	EARTH CABLE	CABLE A MASSE	PLAYA
27	39312-60A01	1	CABLE SUPRESOR RUIDO	ANTINOISE CABLE	CABLE ANTI-BRUIT	T3
28	35318-00000	1	CABLE ALIM.ANTINIEB.	ANTIFOG FEED.CABLE	CABLE ALIM ANTIBROUI	PLAYA
	35319-00000	1	CABLE ALIM.RELE-PILO	RELAY-LIGH.FEED.CABL	CABLE ALI.RELAIS-FEU	PLAYA
	35320-00000	1	CABLE ALIM.RELE	RELAY FEED.CABLE	CABLE ALIM.RELAIS	PLAYA
	35321-00000	1	CABLE ALIM.FAROS	HEADLIGHT FEED.CABLE	CABLE ALIM.PHARES	PLAYA
29	39312A60A01	1	CABLE SUPRESOR RUIDO	ANTINOISE CABLE	CABLE ANTI-BRUIT	T1,T2

FIG.41

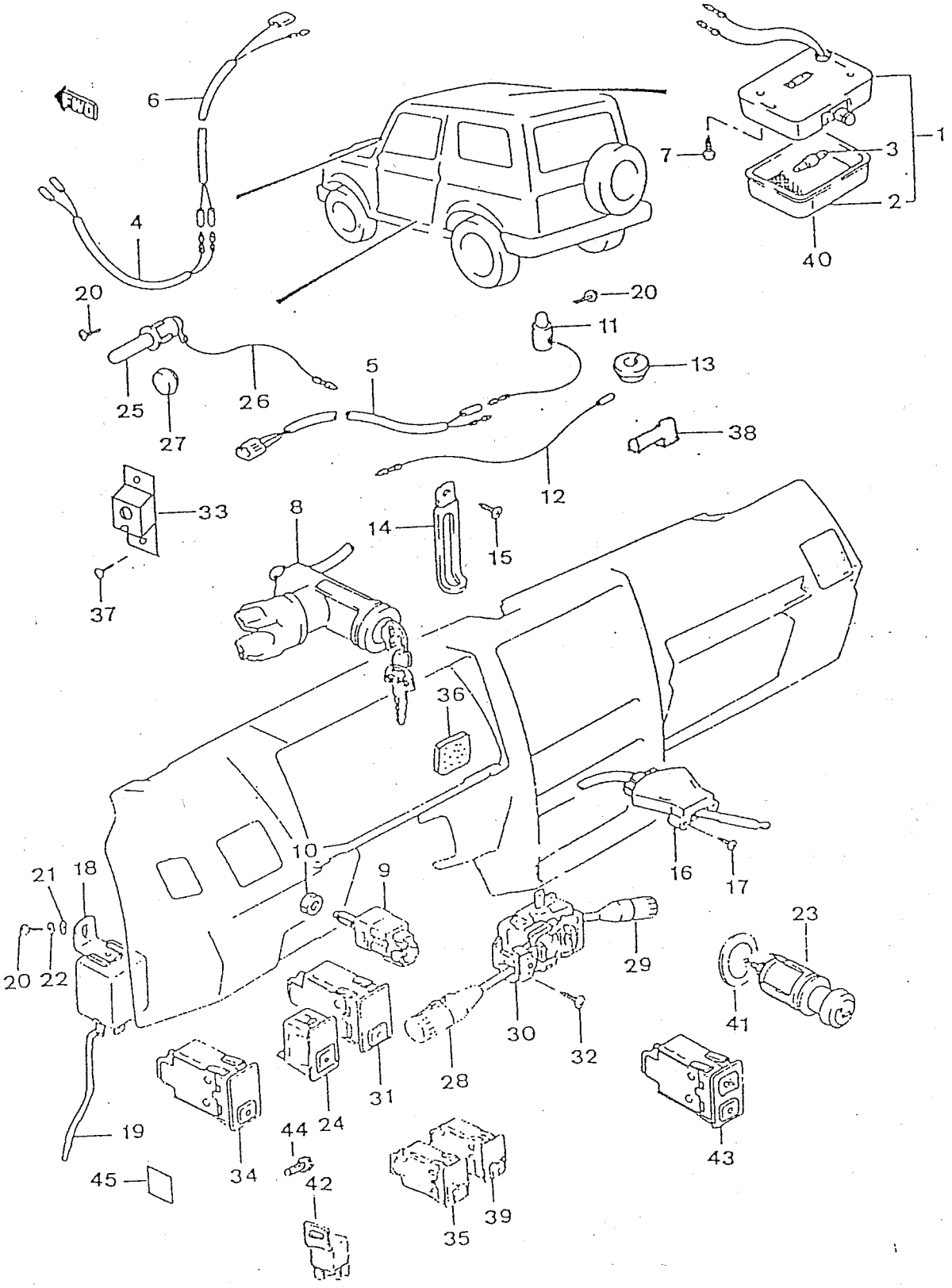

FWD
6
4
20
25
27
26
5
20
11
13
38
12
33
37
8
14
15
36
10
9
16
17
21
18
20
22
29
23
41
30
32
28
31
24
34
19
44
42
45
35
39
43
7
3
1
2
40

PUBLICACION N:A01116 GRUPO=SISTEMA ELECTRICO SUBGRUPO=F-12INTERRUPTORES
EDICION N: 1 GROUP=ELECTRIC SYSTEM SUBGROUP=F-12SWITCHES
GROUPE=SYSTEME ELECTRIQUE SUBGROUPE=F-12INTERRUPTEURS

N.FIG PLATE N.FIG	N.PIEZA PARTNUMBER N.PIECE	CAN QTY OUT	DENOMINACION	DESCRIPTION	DENOMINATION	OBSERVACIONES
1	36210A79003	1	CONJ.LUZ TECHO	ROOF LIGHT ASSY	ENS.ECLAIRAGE TOIT	H 121456
	36210D79003	1	CONJ.LUZ TECHO	ROOF LIGHT ASSY	ENS.ECLAIRAGE TOIT	D 121457
2	00000A00075	1	PLASTICO	PLASTIC	TRANSPARENCIA	
3	36210B79003	1	LAMPARA 12 V	12 V BULB	LAMPE 12 V	
4	36820-80010	1	CABLE LUZ INTERIOR	INNER LIGHT CABLE	CABLE ECLAIRAGE INT.	D 121457-'J'
	36820A80010	1	CABLE LUZ INTERIOR	INNER LIGHT CABLE	CABLE ECLAIRAGE INT.	H 121456-'J'
5	36820A61000	1	CABLE LUZ TECHO N.1	ROOF LIGHT CABLE N.1	CABLE ECLAIR.INT.N.1	'V'
6	36820-80001	1	CABLE CONEX.LUZ INT.	IN.LIGHT CONN.CABLE	CABLE CONNEC.ECL.INT	T3
	36820A80000	1	CABLE CONEX.LUZ INT.	IN.LIGHT CONN.CABLE	CABLE CONNEC.ECL.INT	'J'
7	03141-04166	2	TORNILLO	SCREW	VIS	
8	37100A73302	1	C/CIERRE DIRECCION	STEERING LOCK ASSY	ENS.VERROU DIRECTION	H 78033
	37100B73302	1	C/CIERRE DIRECCION	STEERING LOCK ASSY	ENS.VERROU DIRECTION	D 78034
9	37740-60A10	1	INTERRUPTOR PARE	STOP LIGHT SWITCH	INTERRUPT.FEU STOP	T2,T3
	37740A66010	1	INTERRUPTOR PARE	STOP LIGHT SWITCH	INTERRUPT.FEU STOP	T1
10	08310-22106	1	TUERCA	NUT	ECROU	
11	37940A79000	1	INTERRUPT.FRENO MANO	HANDBRAKE SWITCH	INTERRUPT.FREIN MAIN	
12	36850A79500	1	CABLE INTERRUP.FRENO	BRAKE SWITCH CABLE	CABLE INTERRUP.FREIN	H 121456
	36850C79500	1	CABLE INTERRUP.FRENO	BRAKE SWITCH CABLE	CABLE INTERRUP.FREIN	D 121457
13	09308-14006	1	PASACABLES	GROMMET	PASSE-CABLES	
14	09404A06402	2	CLIP	CLIP	CLIP	
15	03111-05128	1	TORNILLO	SCREW	VIS	
16	37870-80000	1	INTERRUPTOR CALEFACT	HEATER SWITCH	INTERRUPT.CHAUFFAGE	
17	03211-04106	2	TORNILLO	SCREW	VIS	
18	38610-50A01	1	RELE INTERMITENTE	FLASHER RELAY	RELAIS CLIGNOTANT	D 121457
	38610D78303	1	RELE INTERMITENTE	FLASHER RELAY	RELAIS CLIGNOTANT	H 121456
19	38610B78303	1	CABLE RELE	RELAY CABLE	CABLE RELAIS	
20	03141-04126	3	TORNILLO	SCREW	VIS	
21	08322-21048	1	ARANDELA PLANA	FLAT WASHER	RONDELLE PLATE	
22	08323A31056	1	ARANDELA PLANA	FLAT WASHER	RONDELLE PLATE	
23	39400A83000	1	C/ENCENDEDOR	LIGHTER ASSY	ENS.ALLUME-CIGARETTE	
24	37280A50A00	1	INTERRUPT.ANTINIEBLA	ANTIFOG SWITCH	INTERRUPT.ANTIBROUIL	
25	37670D80000	1	INTERRUPTOR PUERTA	DOOR SWITCH	INTERRUPTEUR PORTE	
26	37670E80000	1	CABLE	CABLE	CABLE	H 121456
	37670H80000	1	CABLE	CABLE	CABLE	D 121457

FIG.41.1

F-12.1

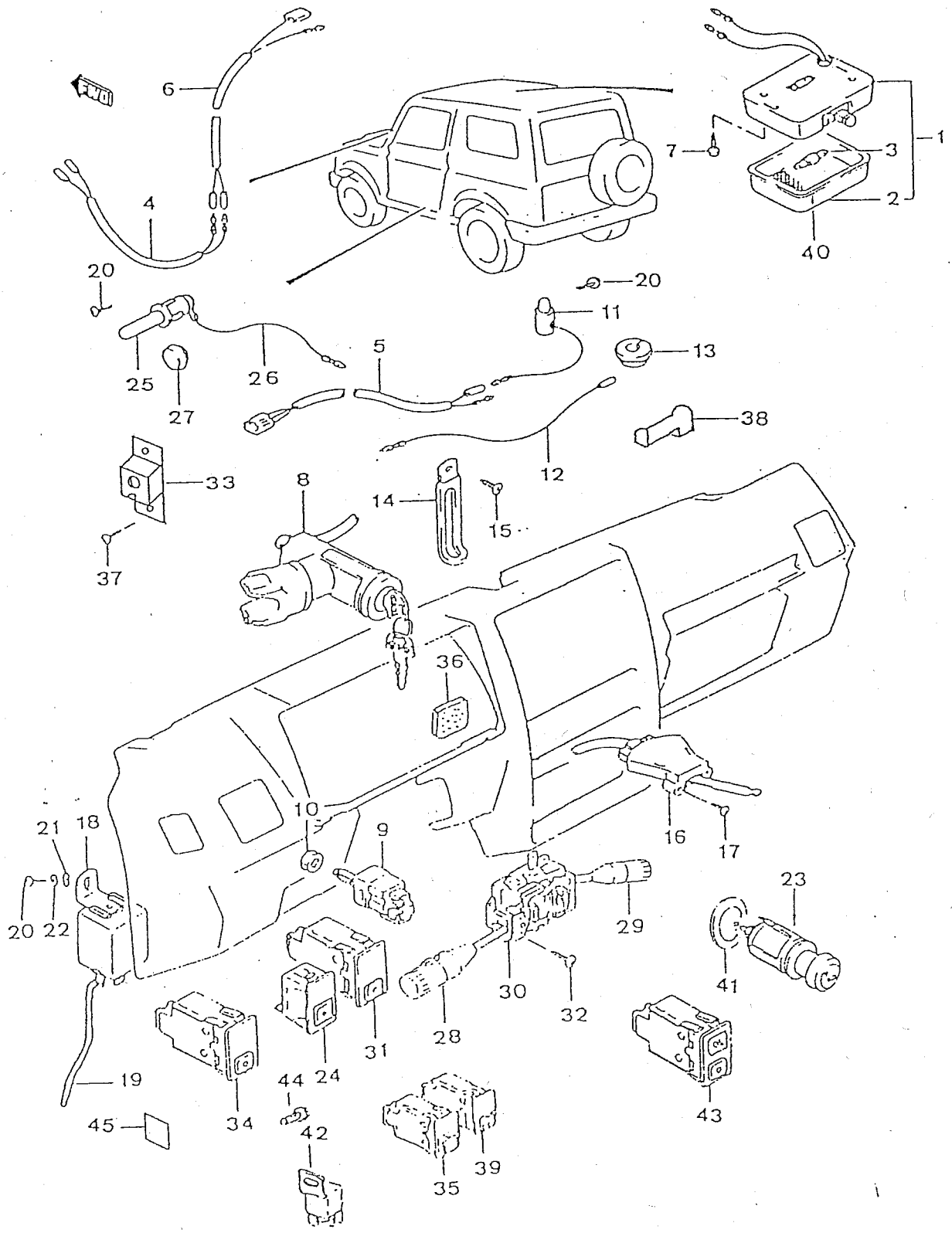

6
4
20
25
27
26
5
20
11
13
38
12
33
37
8
14
15
36
10
9
21
18
20
22
16
17
23
29
41
30
32
28
31
24
19
34
44
42
45
43
35
39
7
3
1
2
40

PUBLICACION N:A01116 GRUPO=SISTEMA ELECTRICO SUBGRUPO=F-12.1INTERRUPTORES
EDICION N: 1 GROUP=ELECTRIC SYSTEM SUBGROUP=F-12.1SWITCHES
GROUPE=SYSTEME ELECTRIQUE SUBGROUPE=F-12.1INTERRUPTEURS

N.FIG PLATE N.FIG	N.PIEZA PARTNUMBER N.PIECE	CAN QTY OUT	DENOMINACION	DESCRIPTION	DENOMINATION	OBSERVACIONES
27	09250-14003	1	TAPON	PLUG	BOUCHON	
28	37400A84420	1	INTERRUPTOR COMBINAD	COMBINED SWITCH	INTERRUPTEUR COMBINE	
29	37400B84420	1	INTERRUPTOR LIMPIA	SCREENWIPER SWITCH	INTERRUPT.ESSUI-GLAC	
30	37400L84420	1	SOPORTE MANDO	CONTROL BRACKET	SUPPORT COMMANDE	
31	35222-00000	1	INTERRUPTOR EMERGENC	EMERGENCY SWITCH	INTERRU.FEU DETRESSE	
32	03141-04086	4	TORNILLO	SCREW	VIS	
33	37670C80000	1	SOPORTE	BRACKET	SUPPORT	
34	37860A50A00	1	INTERRUPTOR LUNETA	REAR WINDOW SWITCH	INTERRUPTEUR LUNETTE	
35	35223-00000	1	C/INTERRUP.LIMP.TRAS	RR WIPER SWITCH A/	E/INTERRUP.L-VIT.ARR	'JH'
36	35132-00000	1	TAPON CONTROL	CONTROL PLUG	BOUCHON CONTROLE	
37	03141-04086	2	TORNILLO FIJ.SOPORTE	BRACK.FIX.SCREW	VIS FIXA.SUPPORT	
38	37941A79000	1	AISLANTE INTERR.FREN	BRAK.SWITCH INSULANT	ISOLANT INTERR.FREIN	
39	35256-00000	1	INTERRUP.LAVA.TRAS.	RR WASHER SWITCH	INTERRUP.L-VITR.ARR.	D 66290
40	35255-00000	1	JUNTA	GASKET	JOINT	
41	39471-78001	1	CERQUILLO ENCENDEDOR	LIGHTER FRAME	CADRE ALLUME-CIGARET	'T3
42	00000A01044	1	RELE FARO ANTINIEBLA	ANTIFOG LIGHT RELAY	RELAIS FEU ANTIBROUI	'PLAYA'
43	35060-00000	1	INTERR.FARO NIEB.DEL	FR.FOG LIGHT SWITCH	INTERR.FEU BROUIL.AV	'PLAYA'
	35224-00000	1	INTERR.FARO NIEB.DEL	FR.FOG LIGHT SWITCH	INTERR.FEU BROUIL.AV	'PLAYA'
44	02112-05126	1	TORNILLO RELE	RELAY SCREW	VIS RELAIS	'PLAYA'
45	50029-00000	4	LAMINA ADHESIVA	ADHESIVE PLATE	PLAQUE ADHESIVE	NO HEATER
46	35172-00000	1	CABL.MASA INTERR.FRE	BRAK.SWITCH EAR.CABL	CABL.MASSE INTER.FRE	NOT SHOWN

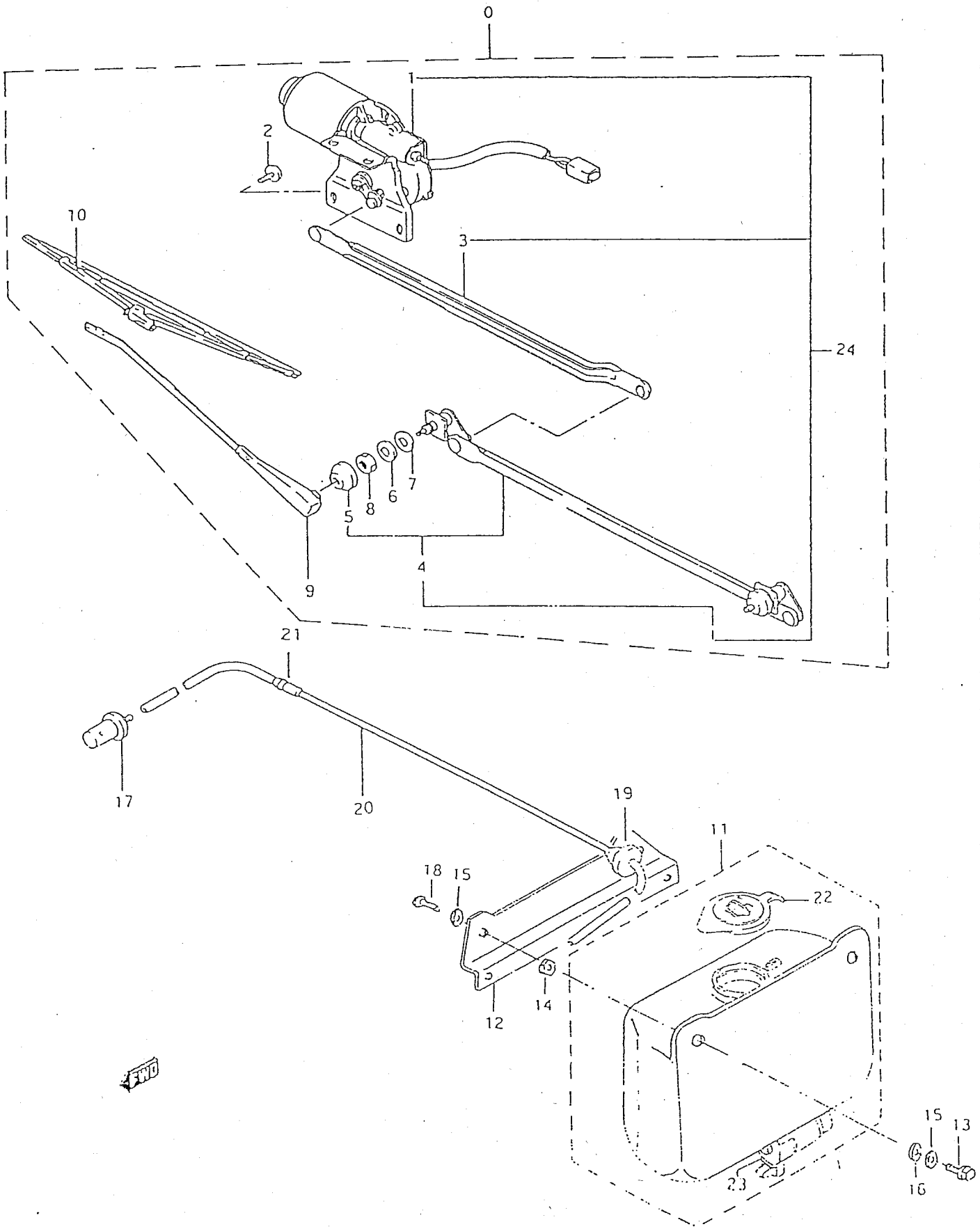
0
1
2
10
3
24
5
8
6
7
4
9
21
17
20
19
11
18
15
22
14
12
23
15
13
16

PUBLICACION N:A01116 GRUPO=SISTEMA ELECTRICO SUBGRUPO=F-13LIMPIA DELANTERO
EDICION N: 1 GROUP=ELECTRIC SYSTEM SUBGROUP=F-13FR.WINDSC.WIPER
GROUPE=SYSTEME ELECTRIQUE SUBGROUPE=F-13ESSUI-GLACE AV.

N.FIG PLATE N.FIG	N.PIEZA PARTNUMBER N.PIECE	CAN QTY OUT	DENOMINACION	DESCRIPTION	DENOMINATION	OBSERVACIONES
	00000A00920	1	C/EQUIPO LIMPIAPARAB	SCR.WIPER EQUIP.ASSY	ENS.EQUIP.LAVE-VITRE	
1	38101-80031	1	MOTOR LIMPIA.	WINDSC.WIPER MOTOR	MOTEUR ESSUI-GLACE	NIPPON
	38101A80031	1	MOTOR LIMPIA.	WINDSC.WIPER MOTOR	MOTEUR ESSUI-GLACE	T1,T2-DOGA
	38101B80031	1	MOTOR LIMPIA.	WINDSC.WIPER MOTOR	MOTEUR ESSUI-GLACE	T3-DOGA
2	02142-06125	4	TORNILLO	SCREW	VIS	
3	38255-80000	1	VARILLA	ROD	TIGE	NIPPON
4	38102-80031	1	CONJUNTO BIELA	CONNECTING ROD ASSY	ENSEMBLE BIELLE	NIPPON
	38102A80031	1	CONJUNTO BIELA	CONNECTING ROD ASSY	ENSEMBLE BIELLE	DOGA
5	38274-78000	2	GOMA	RUBBER	CAOUTCHOUC	
6	38271-71310	2	ARANDELA	WASHER	RONDELLE	
7	38272-71310	2	JUNTA	GASKET	JOINT	
8	38278-67011	2	TUERCA	NUT	ECROU	
9	38310A80030	2	BRAZO	ARM	BRAS	
10	38340A63641	2	ESCOBILLA	BLADE	BALAIS	
11	38400E80000	1	C/DEPOSITO Y BOMBA	PUMP AND TANK ASSY	ENS.RESERVOIR-POMPE	
12	38400B80000	1	SOPORTE DEPOSITO	TANK BRACKET	SUPPORT RESERVOIR	
13	01104-06166	2	TORNILLO	SCREW	VIS	
14	08310-11066	2	TUERCA	NUT	ECROU	
15	08321A31066	2	ARANDELA MUELLE	SPRING WASHER	RONDELLE ELASTIQUE	
16	09160-06027	2	ARANDELA PLANA	FLAT WASHER	RONDELLE PLATE	
17	38480-80000	1	DIFUSOR	DIFFUSER	DIFFUSEUR	
18	02142-06126	2	TORNILLO	SCREW	VIS	
	08321A31066	2	ARANDELA MUELLE	SPRING WASHER	RONDELLE ELASTIQUE	
19	82191A80002	1	PASACABLES	GROMMET	PASSE-CABLES	
20	38400C80000	1	CONJUNTO TUBOS	HOSES ASSY	ENSEMBLE TUYAUX	
21	00000A00282	1	VALVULA	VALVE	SOUPAPE	
22	00000A00292	1	TAPON DEPOSITO	TANK PLUG	BOUCHON RESERVOIR	
23	00000A00281	1	BOMBA DEPOSITO	TANK PUMP	POMPE RESERVOIR	
24	38100A80031	1	MOTOR Y TRANSMISION	ENGINE & TRANSMISS.	MOTEUR & TRANSMISS.	DOGA
25	08316B16066	2	TUERCA	NUT	ECROU	NOT SHOWN

FIG.43

F-14

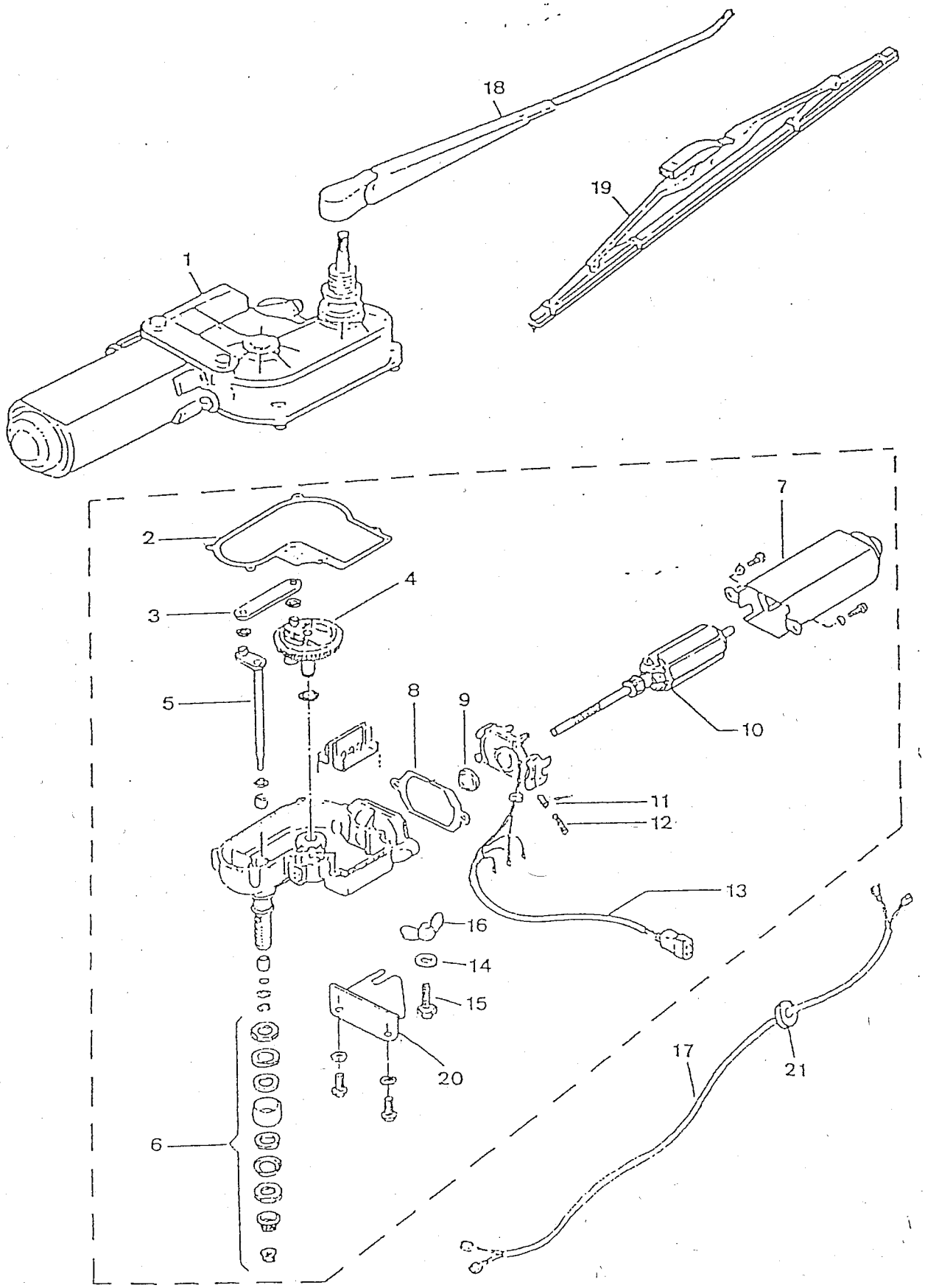

PUBLICACION N:A01116 GRUPO=SISTEMA ELECTRICO SUBGRUPO=F-14LIMPIA TRAS.JH
EDICION N: 1 GROUP=ELECTRIC SYSTEM SUBGROUP=F-14RR.WINDSC.WIP.JH
GROUPE=SYSTEME ELECTRIQUE SUBGROUPE=F-14ESSUI-GL.ARR.JH

N.FIG PLATE N.FIG	N.PIEZA PARTNUMBER N.PIECE	CAN QTY OUT	DENOMINACION	DESCRIPTION	DENOMINATION	OBSERVACIONES
1	35008-00000	1	C/MOTOR LIMPIA	SC.WIPER ENGINE ASSY	ENS.MOTEUR ESSUI-GL.	
2	00000A00330	1	JUNTA	GASKET	JOINT	
3	00000A00331	1	BIELA CONDUCIDA	CONDUCTED CONNEC.ROD	BIELLE MENEE	
4	00000A00988	1	RUEDA EJE	SHAFT WHEEL	ROUE AXE	
5	00000A00333	1	BIELA MOTRIZ	MOTOR CONNECTING ROD	BIELLE MOTRICE	
6	00000A00334	1	C/SUJECION	SUPPORT ASSY	ENSEMBLE SUPPORT	
7	00000A00335	1	ARMADURA	COVER	COUVERCLE	
8	00000A00336	1	JUNTA	GASKET	JOINT	
9	00000A00337	1	ARANDELA GOMA	RUBBER WASHER	RONDELLE CAOUTCHOUC	
10	00000A00986	1	INDUCIDO	STATOR	INDUIT	
11	00000A00339	1	ESCOBILLA	BRUSH	BALAIS	
12	00000A00340	1	MUELLE	SPRING	RESSORT	
13	00000A00341	1	SOP.ESCOBILLA-CABLE	BRUSH-CABLE BRACKET	SUPPORT BALAIS-CABLE	
14	09160-06020	1	ARANDELA PLANA	FLAT WASHER	RONDELLE PLATE	
15	09119A06007	1	TORNILLO	SCREW	VIS	
16	08310-11066	1	TUERCA MARIPOSA	BUTTERFLY NUT	ECROU PAPILLON	
17	35226-00000	1	CABLE MOTOR LIMPIA	SCR.WIPER ENG.CABLE	CABLE MOTEUR ESSUI-G	
18	35009-00000	1	BRAZO	ARM	BRAS	
19	35010-00000	1	ESCOBILLA	BRUSH	BALAIS	
20	00000A00487	1	SOPORTE MOTOR	ENGINE BRACKET	SUPPORT MOTEUR	
21	35070-00000	4	ARANDELA PASACABLES	GROMMET	RONDELLE PASSECABLES	

FIG.43.1

F-14.1

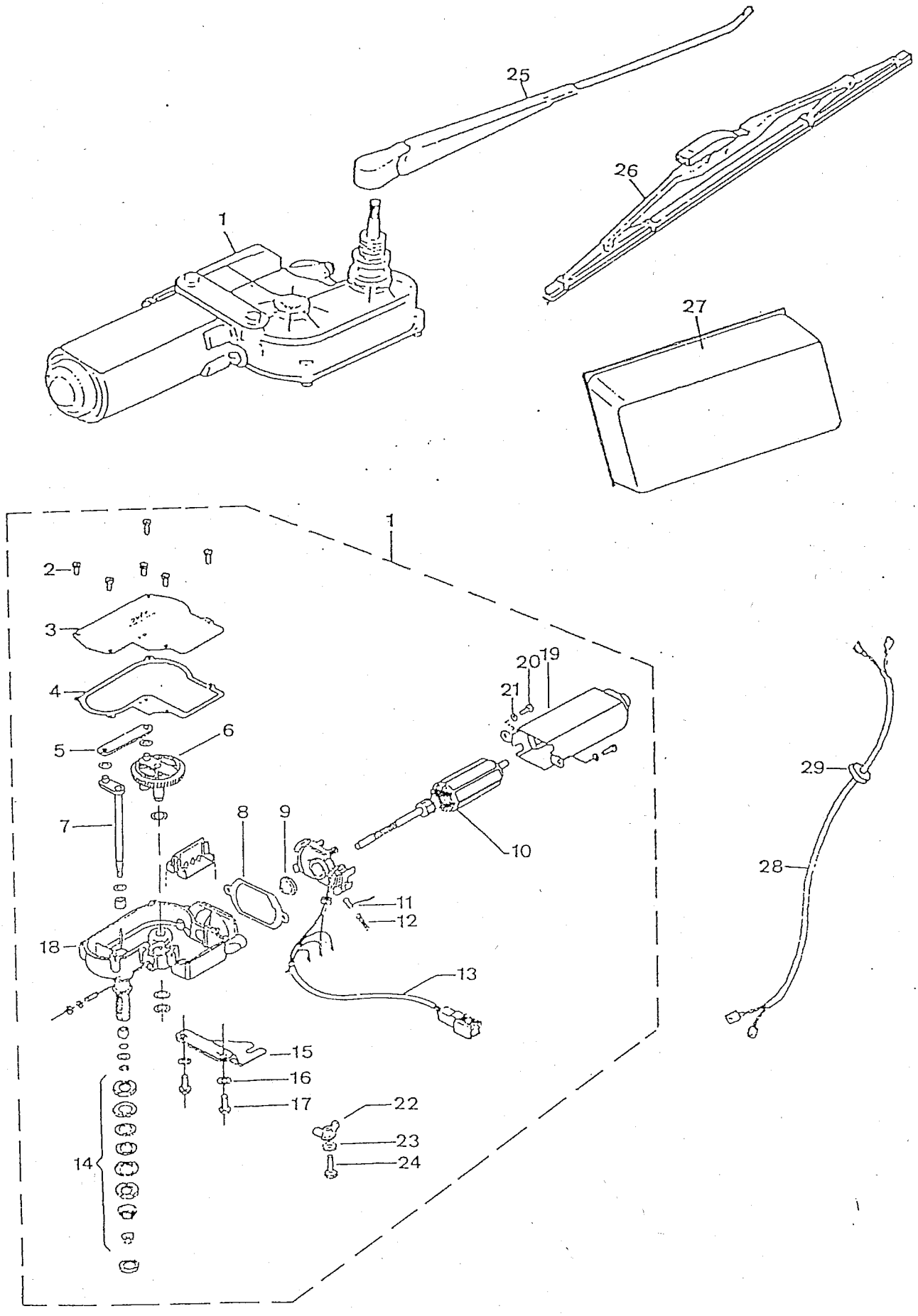
25
26
1
27
1
2
3
4
5
6
7
8
9
10
11
12
13
14
15
16
17
18
19
20
21
22
23
24
29
28

PUBLICACION N:A01116 GRUPO=SISTEMA ELECTRICO SUBGRUPO=F-14.1LIMPIA TRAS.JH
EDICION N: 1 GROUP=ELECTRIC SYSTEM SUBGROUP=F-14.1RR WIND.WIP.JH
GROUPE=SYSTEME ELECTRIQUE SUBGROUPE=F-14.1ESSUI-G.ARR.JH

N.FIG PLATE N.FIG	N.PIEZA PARTNUMBER N.PIECE	CAN QTY OUT	DENOMINACION	DESCRIPTION	DENOMINATION	OBSERVACIONES
1	35317-00000	1	C/MOTOR LIMPIA.DOGA	DOGA W.WIPER ENG.A/	E/MOT.LAV.VITRE DOGA	
2	00000A01075	6	TORNILLO TAPA	COVER SCREW	VIS COUVERCLE	
3	00000A01076	1	TAPA	COVER	COUVERCLE	
4	00000A00330	1	JUNTA	GASKET	JOINT	
5	00000A00331	1	BIELA CONDUCIDA	CONDUCTED CONN.ROD	BIELLE MENEE	
6	00000A00988	1	RUEDA EJE	SHAFT WHEEL	ROUE AXE	
7	00000A00333	1	BIELA MOTRIZ	MOTOR CONNECTING ROD	BIELLE MOTRICE	
8	00000A00336	1	JUNTA	GASKET	JOINT	
9	00000A00337	1	ARANDELA GOMA	RUBBER WASHER	RONDELLE CAOUTCHOUC	
10	00000A00986	1	C/INDUCIDO	ARMATURE ASSY	ENS.INDUIT	
11	00000A00339	1	ESCOBILLA	BRUSH	BALAIS	
12	00000A00340	1	MUELLE	SPRING	RESSORT	
13	00000A01077	1	SOPORTE ESCOB.CABLE	CABLE BRUSH BRACKET	SUPPORT BALAIS CABLE	
14	00000A01078	1	C/SUJECION	FASTENING ASSY	ENS.FIXATION	
15	00000A00487	1	SOPORTE MOTOR	ENGINE BRACKET	SUPPORT MOTEUR	
16	00000A01079	2	ARANDELA PLANA	FLAT WASHER	RONDELLE PLATE	
17	00000A01080	2	TORNILLO FIJ.SOP.	BRACK.FASTEN.SCREW	VIS FIXA.SUPPORT	
18	00000A01081	2	CARCAZA MOTOR	ENGINE HOUSING	LOGEMENT MOTEUR	
19	00000A00335	2	ARMADURA MOTOR	ENGINE ASSEMBLY	ARMATURE MOTEUR	
20	00000A01082	2	TORNILLO	SCREW	VIS	
21	00000A01083	2	ARANDELA PLANA	FLAT WASHER	RONDELLE PLATE	
22	08310-11066	1	TUERCA MARIPOSA	BUTTERFLY NUT	ECROU PAPILLON	
23	09160-06020	1	ARANDELA PLANA	FLAT WASHER	RONDELLE PLATE	
24	09119A06007	1	TORNILLO	SCREW	VIS	
25	35009-00000	1	BRAZO	ARM	BRAS	
26	35010-00000	1	ESCOBILLA	BRUSH	BALAIS	
27	51793-00000	1	CUBIERTA MOTOR	ENGINE COVER	COUVERCLE MOTEUR	
28	36845-84C10	1	CABLE MOTOR LIMPIA.	WINDSC.WIP.ENG.CABLE	CABLE MOTEUR ESSUI-G	
29	35070-00000	4	ARANDELA PASACABLES	GROMMET	PASSE-CABLES	

FIG.43.2

F-14.2

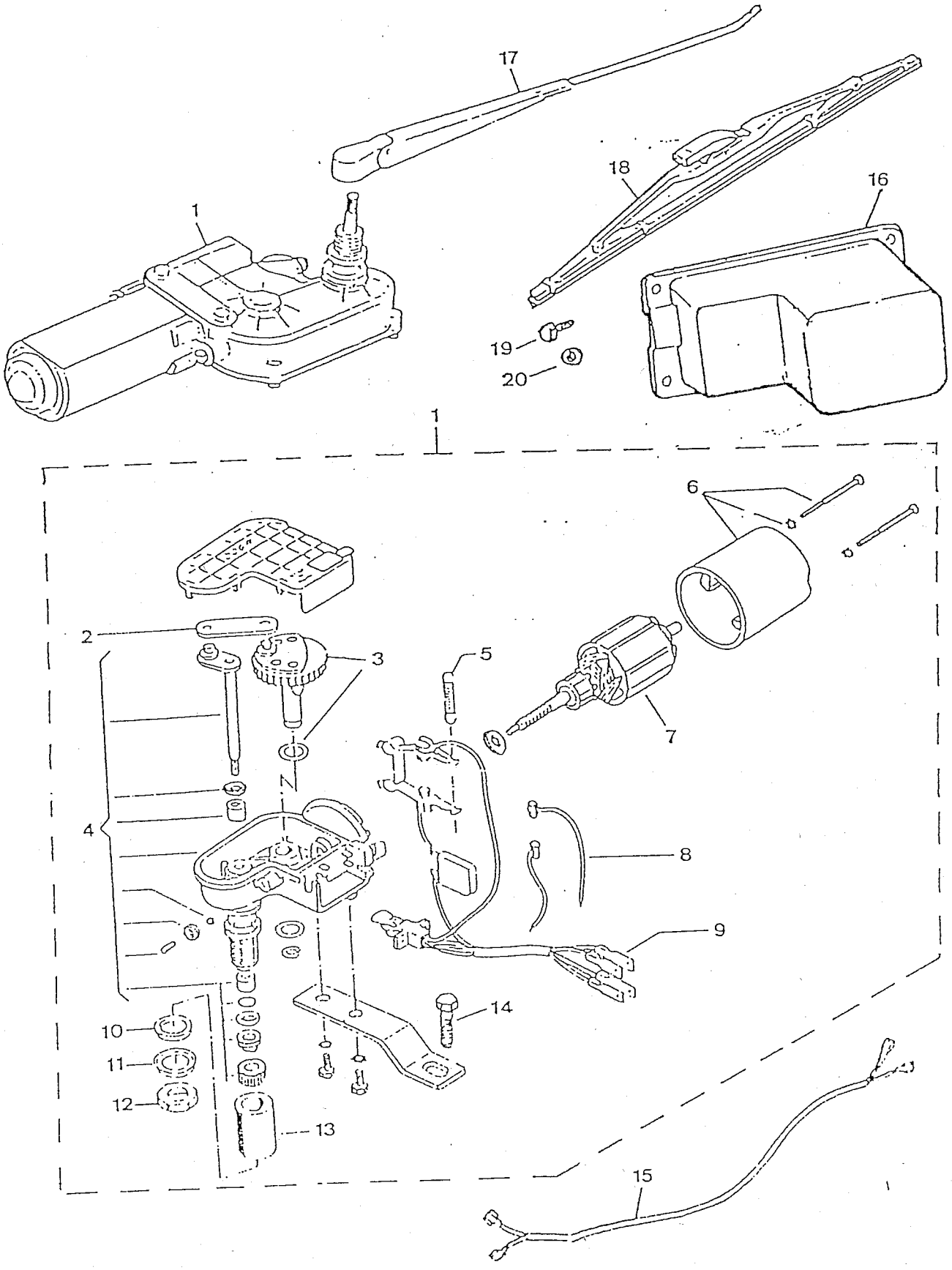

PUBLICACION N:A01116 GRUPO=SISTEMA ELECTRICO SUBGRUPO=F-14.2LIMPIA TRAS.V
EDICION N: 1 GROUP=ELECTRIC SYSTEM SUBGROUP=F-14.2RR WIND.WIP.V
GROUPE=SYSTEME ELECTRIQUE SUBGROUPE=F-14.2ESSUI-G.ARR.V

N.FIG PLATE N.FIG	N.PIEZA PARTNUMBER N.PIECE	CAN QTY OUT	DENOMINACION	DESCRIPTION	DENOMINATION	OBSERVACIONES
1	35017-00000	1	MOTOR LIMPIA.(DOGA)	WIPER ENGINE (DOGA)	MOTEUR ESSUI-G(DOGA)	
2	00000A00342	1	BIELA CONDUCIDA	CONDUCTED CONN.ROD	BIELLE MENEE	
3	00000A00343	1	RUEDA EJE	SHAFT WHEEL	ROUE AXE	
4	00000A00344	1	CARCAZA	HOUSING	LOGEMENT	
5	00000A00345	1	MUELLE	SPRING	RESSORT	
6	00000A00346	1	ARMADURA	COVER	COUVERCLE	
7	00000A00347	1	INDUCIDO	ARMATURE	INDUIT	
8	00000A00348	2	ESCOBILLA	BRUSH	BALAIS	
9	00000A00349	1	SOP.ESCOBILLA CABLE	CABLE BRUSH BRACKET	SUP.BALAIS CABLE	
10	00000A00350	1	ARANDELA	WASHER	RONDELLE	
11	00000A00351	1	CAZOLETA	CUP	LOGEMENT	
12	00000A00352	1	TUERCA	NUT	ECROU	
13	00000A00353	1	CASQUILLO	BUSH	BAGUE	
14	03141-04086	1	TORNILLO	SCREW	VIS	
15	35231-00000	1	CABLEADO MOTOR	ENGINE WIRING	FAISCEAU MOTEUR	
16	35021-00000	1	CUBIERTA MOTOR	ENGINE COVER	COUVERCLE MOTEUR	
17	35018-00000	1	BRAZO	ARM	BRAS	
18	35103-00000	1	ESCOBILLA	BRUSH	BALAIS	
19	03141-04086	4	TORNILLO	SCREW	VIS	
20	WC105004	4	ARANDELA PLANA	FLAT WASHER	RONDELLE PLATE	

GRUPO 06 TRANSMISION Y EJES

GROUP 06 TRANSMISSION & SHAFT

GROUP 06 TRANSMISSION ET AXES

COMPOSICION.....COMPOSITION.....COMPOSICION

REFERENCIA PARTNUMBER NUM.PIECE	DENOMINACION	DESCRIPTION	DENOMINATION
406044	G-02ARBOL TRANSM.	G-02TRANSM.SHAFT	G-02ARBRE TRANSM.
406045	G-03DIFERENCIAL DEL.	G-03FR.DIFFERENTIAL	G-03DIFFERENTIEL AV.
406045.1	G-03.1DIFER.DEL.	G-03.1FRONT DIFFER.	G-03.1DIFFER.AVANT
406046	G-04DIFERENTIAL TRAS	G-04RR DIFFERENTIAL	G-04DIFFERENTIEL ARR
406046.1	G-04.1DIFER.TRAS.	G-04.1RR DIFFER.	G-04.1DIFFER.ARRIERE
406047	G-05PALIER DEL.	G-05FRONT AXLE SHAFT	G-05PALIER AVANT
406048	G-06PALIER TRAS.	G-06REAR AXLE SHAFT	G-06PALIER ARRIERE
406049	G-07CARTER EJE	G-07SHAFT CASE	G-07CARTER AXE
406050	G-08RUEDA/NEUMATICO	G-08WHEEL/TYRE	G-08ROUE/PNEU

FIG.44

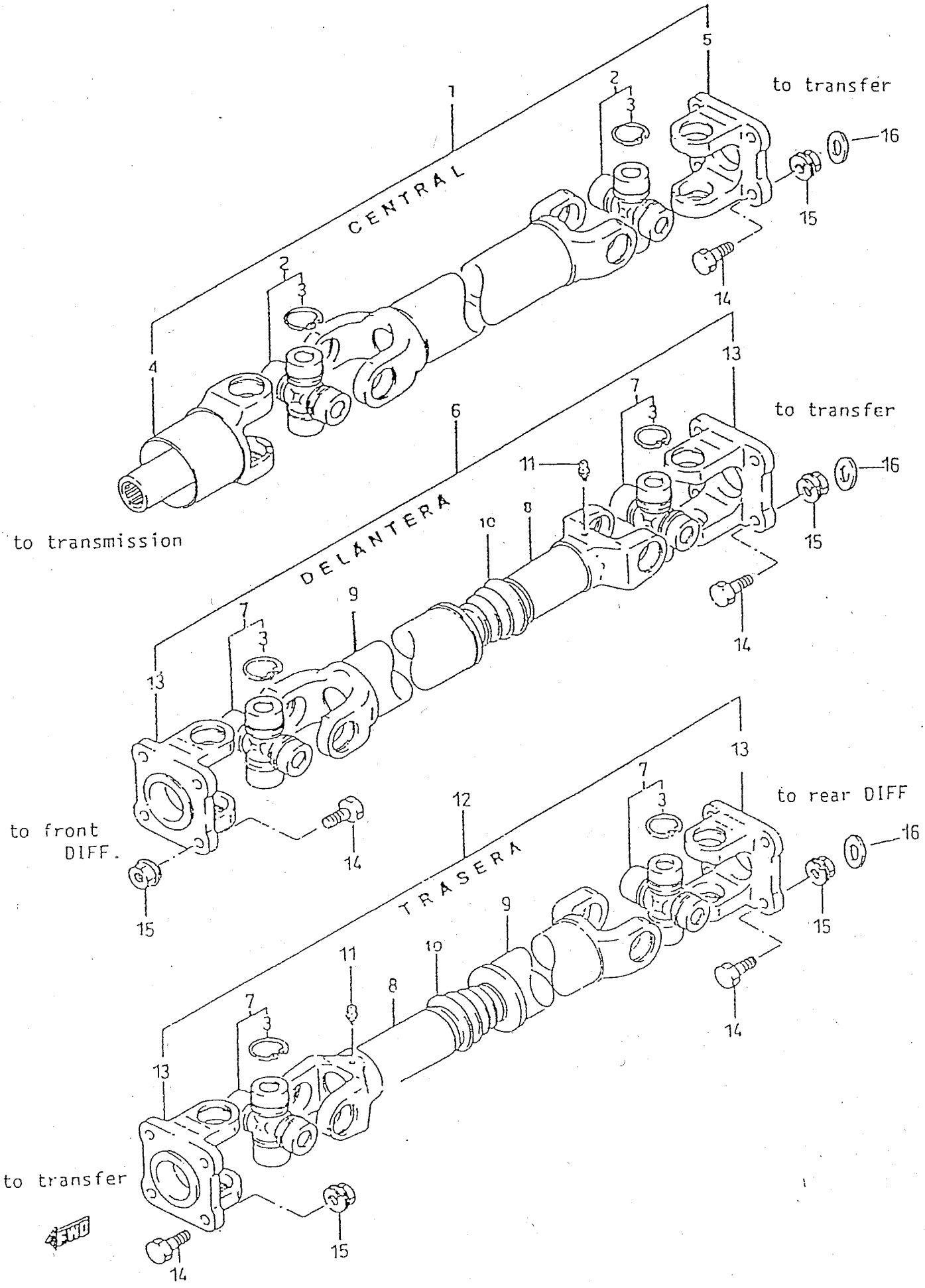
CENTRAL
DELANTERA
TRASERA
to transfer
to transmission
to front DIFF.
to rear DIFF
to transfer
1
2
3
4
5
6
7
8
9
10
11
12
13
14
15
16

PUBLICACION N:A01116 GRUPO=TRANSMISION Y EJES SUBGRUPO=G-02ARBOL TRANSM.
EDICION N: 1 GROUP=TRANSMISSION & SHAFT SUBGROUP=G-02TRANSM.SHAFT
GROUPE=TRANSMISSION ET AXES SUBGROUPE=G-02ARBRE TRANSM.

N.FIG PLATE N.FIG	N.PIEZA PARTNUMBER N.PIECE	CAN QTY OUT	DENOMINACION	DESCRIPTION	DENOMINATION	OBSERVACIONES
1	27101B80401	1	C/EJE PROPULSOR	PROPELLER SHAFT ASSY	ENS.AXE PROPULSEUR	
2	27200A83000	2	C/CRUZ	SPIDER ASSY	ENS.CROISILLON	
3	08331A41256	12	CIRCLIP	CIRCLIP	CIRCLIP	
4	27141A83000	1	HORQUILLA DESLIZANTE	SLIDING FORK	FOURCHETTE GLISSIERE	
5	27131A83000	1	HORQUILLA LADO BRIDA	FORK,FLANGE SIDE	FOURCH.COTE BRIDE	
6	27102C83001	1	C/EJE PROPULSOR	PROPELLER SHAFT ASSY	ENS.AXE PROPULSEUR	
7	27200B83010	4	C/CRUZ	SPIDER ASSY	ENS.CROISILLON	
8	27180B83001	2	HORQUILLA DESLIZANTE	SLIDING FORK	FOURCHETTE GLISSIERE	
9	27152B83002	1	HORQUILLA FIJA	FIXED FORK	FOURCHE FIXE	
10	27153B83000	1	GUARDAPOLVOS	BOOT	PAREPOUSSIERE	
11	08351A21008	2	ENGRASADOR	OILER	GRAISSEUR	
12	27103C83001	1	C/EJE PROPULSOR	PROPELLER SHAFT ASSY	ENS.AXE PROPULSEUR	
13	27131B83001	4	HORQUILLA LADO BRIDA	FORK,FLANGE SIDE	FOURCHE COTE BRIDE	
14	09100-08172	20	TORNILLO	SCREW	VIS	
15	08310-12086	20	TUERCA	NUT	ECROU	
16	08321B31086	20	ARANDELA	WASHER	RONDELLE	

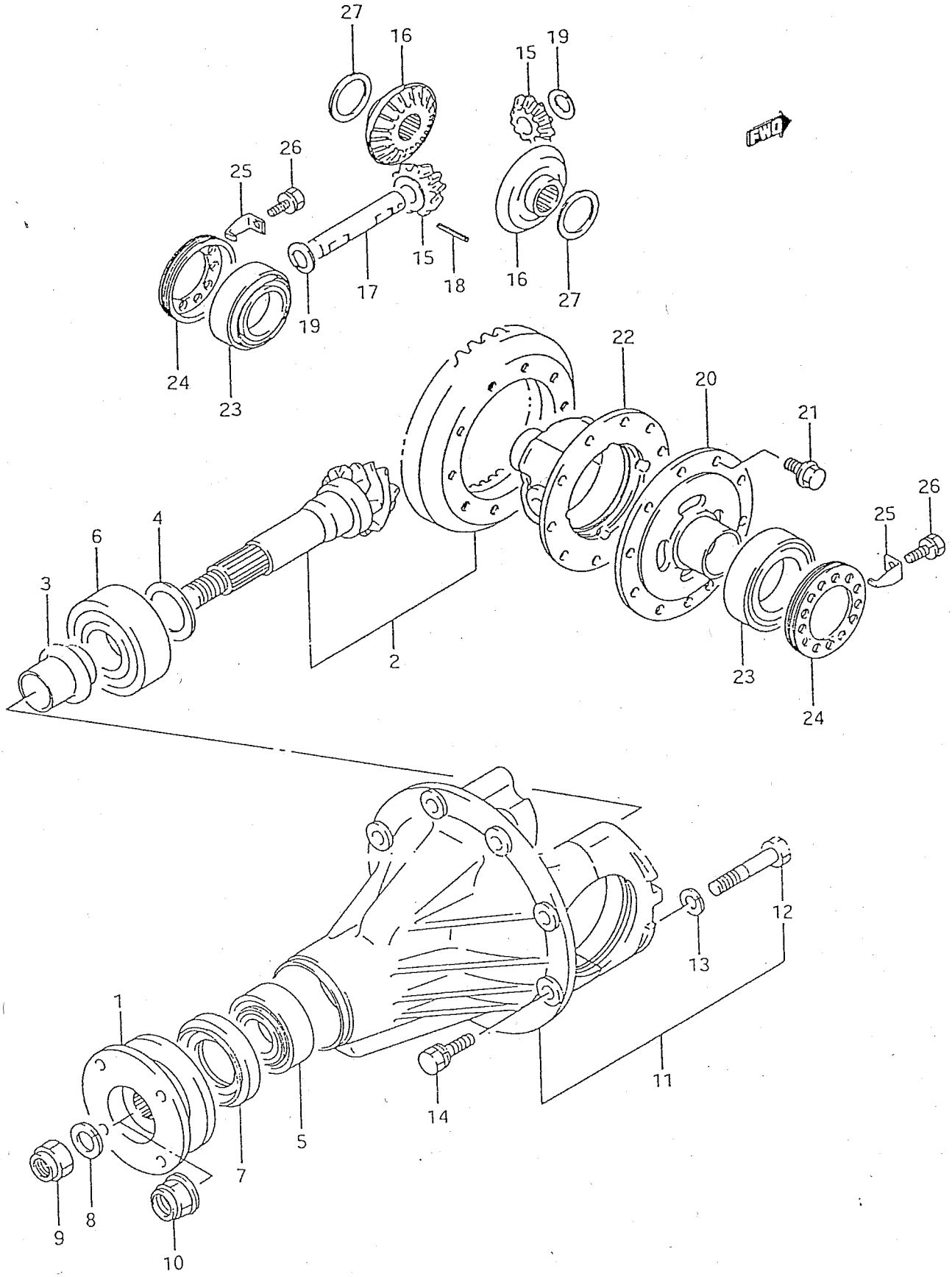
27
16
15
19
26
25
15
18
17
16
27
19
24
23
22
20
21
26
25
6
4
3
2
23
24
12
13
1
14
11
5
7
9
8
10

PUBLICACION N:A01116 GRUPO=TRANSMISION Y EJES SUBGRUPO=G-03DIFERENCIAL DEL.
EDICION N: 1 GROUP=TRANSMISSION & SHAFT SUBGROUP=G-03FR.DIFFERENTIAL
GROUPE=TRANSMISSION ET AXES SUBGROUPE=G-03DIFFERENTIEL AV.

N.FIG PLATE N.FIG	N.PIEZA PARTNUMBER N.PIECE	CAN QTY OUT	DENOMINACION	DESCRIPTION	DENOMINATION	OBSERVACIONES
	27300A83100	1	C/DIFERENCIAL DEL.	FR.DIFFERENTIAL ASSY	ENS.DIFFERENTIEL AV.	
1	27110-83001	1	BRIDA	CLAMP	COLLIER	
2	27311B80002	1	C/CORONA-PINON	PINION-CROWN ASSY	ENS.COURONNE-PIGNON	
3	27315-83001	1	CASQUILLO	BUSH	BAGUE	
4	09181-35012	1	SUPLEMENTO 1,00	SHIM 1,00	SUPPLEMENT 1,00	
	09181-35013	1	SUPLEMENTO 1,03	SHIM 1,03	SUPPLEMENT 1,03	
	09181-35014	1	SUPLEMENTO 1,06	SHIM 1,06	SUPPLEMENT 1,06	
	09181-35015	1	SUPLEMENTO 1,09	SHIM 1,09	SUPPLEMENT 1,09	
	09181-35016	1	SUPLEMENTO 1,12	SHIM 1,12	SUPPLEMENT 1,12	
	09181-35017	1	SUPLEMENTO 1,15	SHIM 1,15	SUPPLEMENT 1,15	
	09181-35018	1	SUPLEMENTO 1,18	SHIM 1,18	SUPPLEMENT 1,18	
	09181-35019	1	SUPLEMENTO 1,21	SHIM 1,21	SUPPLEMENT 1,21	
	09181-35020	1	SUPLEMENTO 1,24	SHIM 1,24	SUPPLEMENT 1,24	
	09181-35021	1	SUPLEMENTO 1,27	SHIM 1,27	SUPPLEMENT 1,27	
	09181-35022	1	SUPLEMENTO 1,30	SHIM 1,30	SUPPLEMENT 1,30	
	09181-35023	1	SUPLEMENTO 0,33	SHIM 0,33	SUPPLEMENT 0,33	
	09181-35024	1	SUPLEMENTO 0,40	SHIM 0,40	SUPPLEMENT 0,40	
	09181-35025	1	SUPLEMENTO 0,50	SHIM 0,50	SUPPLEMENT 0,50	
	09181-35026	1	SUPLEMENTO 0,60	SHIM 0,60	SUPPLEMENT 0,60	
5	09265A30003	1	RODAMIENTO DELANTERO	FRONT BEARING	ROULEMENT AVANT	
6	09262-35002	1	RODAMIENTO TRASERO	REAR BEARING	ROULEMENT ARRIERE	
7	09283-40013	1	RETEN	SEAL	ARRETOIR	
8	09160-20056	1	ARANDELA	WASHER	RONDELLE	
9	09159-20003	1	TUERCA	NUT	ECROU	
10	09160-35002	2	ARANDELA EMPUJE 1,0	THRUST WASHER 1,0	RONDELLE APPUI 1,0	
	09160-35003	2	ARANDELA EMPUJE 1,1	THRUST WASHER 1,1	RONDELLE APPUI 1,1	
	09160-35004	2	ARANDELA EMPUJE 1,2	THRUST WASHER 1,2	RONDELLE APPUI 1,2	
	09160-35006	2	ARANDELA EMPUJE 0,9	THRUST WASHER 0,9	RONDELLE APPUI 0,9	
11	27450-83000	1	CARTER DIFERENCIAL	DIFFERENTIAL CASE	CARTER DIFFERENTIEL	
12	09111A12009	4	TORNILLO	SCREW	VIS	

FIG.45.1

G-03.1

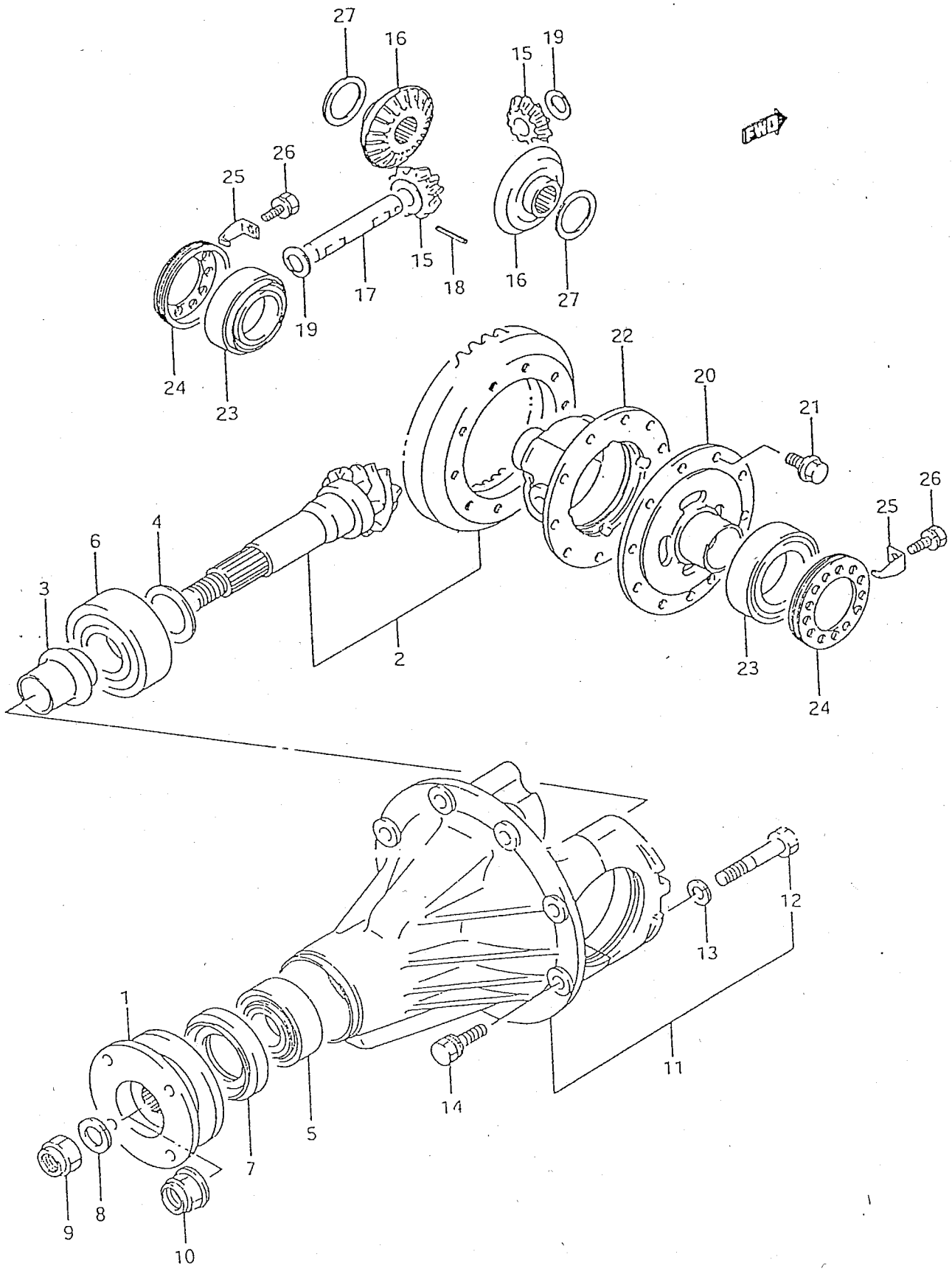
27
16
15
19
26
25
15
18
16
27
17
19
24
23
22
20
21
26
25
4
6
3
2
23
24
12
13
1
14
11
5
7
9
8
10

PUBLICACION N:A01116 GRUPO=TRANSMISION Y EJES SUBGRUPO=G-03.1DIFER.DEL.
EDICION N: 1 GROUP=TRANSMISSION & SHAFT SUBGROUP=G-03.1FRONT DIFFER.
GROUPE=TRANSMISSION ET AXES SUBGROUPE=G-03.1DIFFER.AVANT

N.FIG PLATE N.FIG	N.PIEZA PARTNUMBER N.PIECE	CAN QTY OUT	DENOMINACION	DESCRIPTION	DENOMINATION	OBSERVACIONES
13	08321A31126	4	ARANDELA MUELLE	SPRING WASHER	RONDELLE ELASTIQUE	
14	01707-08253	8	TORNILLO	SCREW	VIS	
	08321B31086	8	ARANDELA	WASHER	RONDELLE	
15	27331-83000	2	PINON SATELITE	SPIDER PINION	PIGNON SATELLITE	
16	27341-83100	2	PINON PLANETARIO	PLANETARY PINION	PIGNON PLANETAIRE	
17	27351-83000	1	EJE PINON SATELITE	SPIDER PINION SHAFT	AXE PIGNON SATELLITE	
18	09205-05007	1	CHAVETA	COTTER	CLAVETTE	
19	09164-15006	4	ARANDELA	WASHER	RONDELLE	
20	27411-83000	1	SEMI-CARTER	SEMI-CASE	DEMI-CARTER	
21	09103-10028	10	TORNILLO	SCREW	VIS	
22	27421-83000	1	SEMI-CARTER	SEMI-CASE	DEMI-CARTER	
23	09265-45002	2	RODAMIENTO	BEARING	ROULEMENT	
24	27461-83000	2	TUERCA DE AJUSTE	ADJUSTING SCREW	ECROU D'AJUSTAGE	
25	27462-63202	2	PLACA DE CIERRE	LOCK PLATE	PLAQUE FERMETURE	
26	01104-08126	2	TORNILLO	SCREW	VIS	
	08321B31086	2	ARANDELA	WASHER	RONDELLE	

FIG.46

G-04

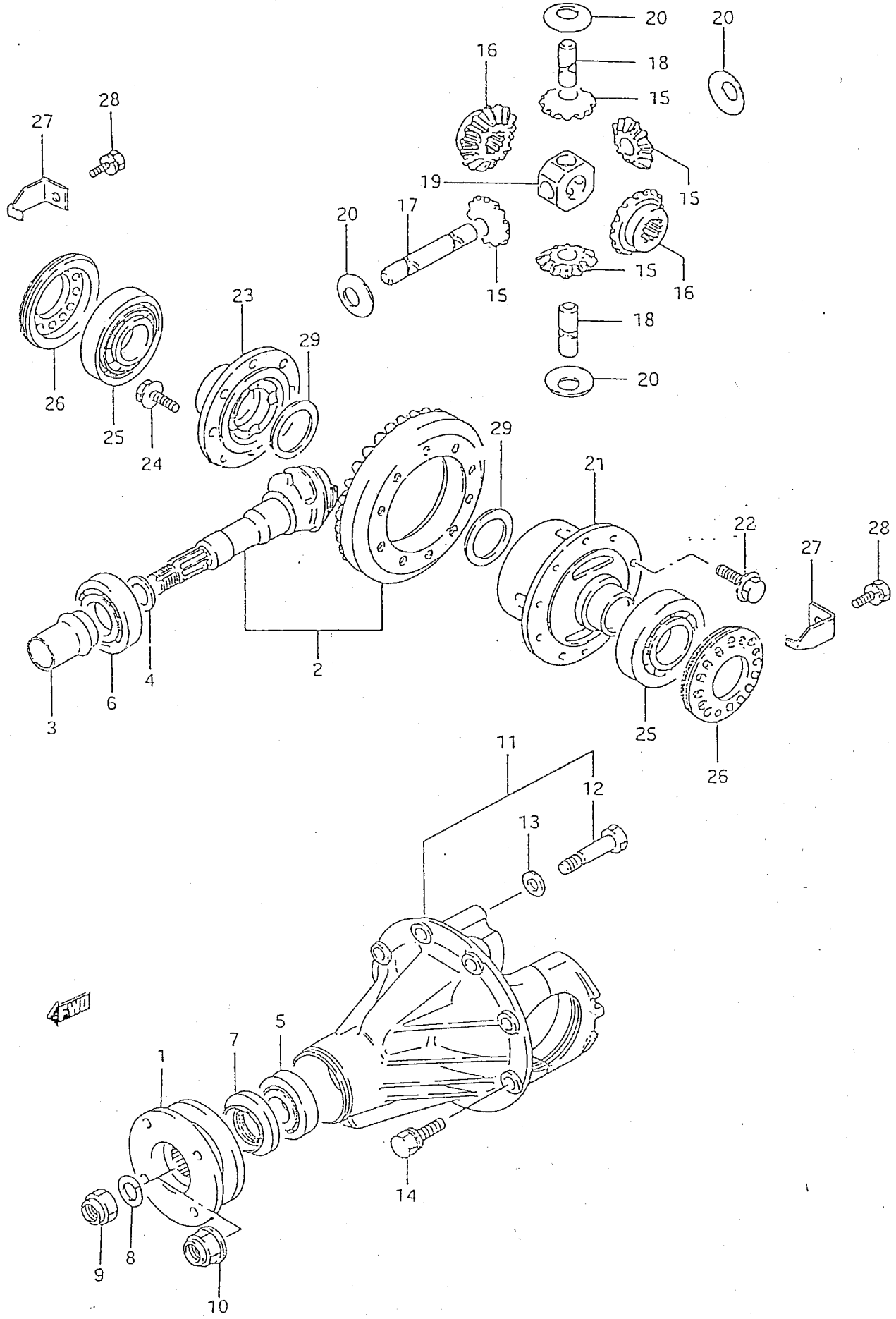

20
20
16
18
15
28
27
19
15
20
17
15
15
16
23
18
29
20
26
25
24
29
21
22
28
27
2
4
6
3
25
26
11
12
13
FWD
5
7
1
14
9
8
10

PUBLICACION N:A01116 GRUPO=TRANSMISION Y EJES SUBGRUPO=G-04DIFERENTIAL TRAS
EDICION N: 1 GROUP=TRANSMISSION & SHAFT SUBGROUP=G-04RR DIFFERENTIAL
GROUPE=TRANSMISSION ET AXES SUBGROUPE=G-04DIFFERENTIEL ARR

N.FIG PLATE N.FIG	N.PIEZA PARTNUMBER N.PIECE	CAN QTY OUT	DENOMINACION	DESCRIPTION	DENOMINATION	OBSERVACIONES
	27301A83100	1	C/DIFERENCIAL TRAS.	RR.DIFFERENTIAL ASSY	ENS.DIFFERENTIEL ARR	
1	27110-83001	1	BRIDA	CLAMP	COLLIER	
2	27311B80002	1	C/CORONA-PINON	PINION-CROWN ASSY	ENS.COURONNE-PIGNON	
3	27315-83001	1	CASQUILLO	BUSH	BAGUE	
4	09181-35012	1	SUPLEMENTO 1,00	SHIM 1,00	SUPPLEMENT 1,00	
	09181-35013	1	SUPLEMENTO 1,03	SHIM 1,03	SUPPLEMENT 1,03	
	09181-35014	1	SUPLEMENTO 1,06	SHIM 1,06	SUPPLEMENT 1,06	
	09181-35015	1	SUPLEMENTO 1,09	SHIM 1,09	SUPPLEMENT 1,09	
	09181-35016	1	SUPLEMENTO 1,12	SHIM 1,12	SUPPLEMENT 1,12	
	09181-35017	1	SUPLEMENTO 1,15	SHIM 1,15	SUPPLEMENT 1,15	
	09181-35018	1	SUPLEMENTO 1,18	SHIM 1,18	SUPPLEMENT 1,18	
	09181-35019	1	SUPLEMENTO 1,21	SHIM 1,21	SUPPLEMENT 1,21	
	09181-35020	1	SUPLEMENTO 1,24	SHIM 1,24	SUPPLEMENT 1,24	
	09181-35021	1	SUPLEMENTO 1,27	SHIM 1,27	SUPPLEMENT 1,27	
	09181-35022	1	SUPLEMENTO 1,30	SHIM 1,30	SUPPLEMENT 1,30	
	09181-35023	1	SUPLEMENTO 0,33	SHIM 0,33	SUPPLEMENT 0,33	
	09181-35024	1	SUPLEMENTO 0,40	SHIM 0,40	SUPPLEMENT 0,40	
	09181-35025	1	SUPLEMENTO 0,50	SHIM 0,50	SUPPLEMENT 0,50	
	09181-35026	1	SUPLEMENTO 0,60	SHIM 0,60	SUPPLEMENT 0,60	
5	09265A30003	1	RODAMIENTO DELANTERO	FRONT BEARING	ROULEMENT AVANT	
6	09265-35002	1	RODAMIENTO TRASERO	REAR BEARING	ROULEMENT ARRIERE	
7	09283-40013	1	RETEN	SEAL	ARRETOIR	
8	09160-20056	1	ARANDELA	WASHER	RONDELLE	
9	09159-20003	1	TUERCA	NUT	ECROU	
10	09160-35002	2	ARANDELA EMPUJE 1,0	THRUST WASHER 1,0	RONDELLE APPUI 1,0	
	09160-35003	2	ARANDELA EMPUJE 1,1	THRUST WASHER 1,1	RONDELLE APPUI 1,1	
	09160-35004	2	ARANDELA EMPUJE 1,2	THRUST WASHER 1,2	RONDELLE APPUI 1,2	
	09160-35006	2	ARANDELA EMPUJE 0,9	THRUST WASHER 0,9	RONDELLE APPUI 0,9	
11	27450-83000	1	CARTER DIFERENCIAL	DIFFERENTIAL CASE	CARTER DIFFERENTIEL	

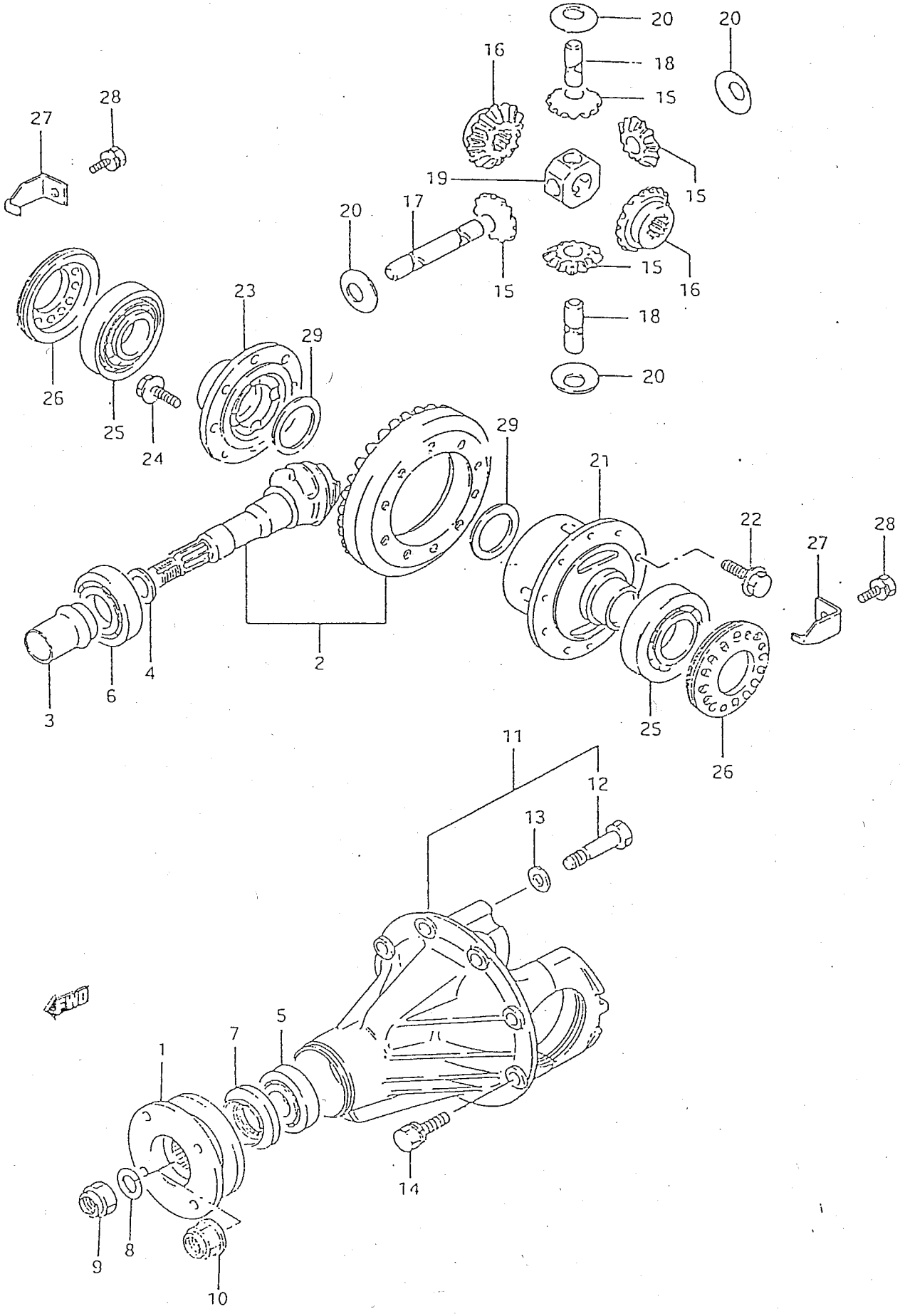
20
20
16
18
15
28
27
19
15
20
17
15
16
15
18
23
29
20
26
25
24
29
21
22
27
28
4
2
3
6
25
26
11
12
13
5
7
1
14
8
9
10

PUBLICACION N:A01116 GRUPO=TRANSMISION Y EJES SUBGRUPO=G-04.1DIFER.TRAS.
EDICION N: 1 GROUP=TRANSMISSION & SHAFT SUBGROUP=G-04.1RR DIFFER.
GROUPE=TRANSMISSION ET AXES SUBGROUPE=G-04.1DIFFER.ARRIERE

N.FIG PLATE N.FIG	N.PIEZA PARTNUMBER N.PIECE	CAN QTY OUT	DENOMINACION	DESCRIPTION	DENOMINATION	OBSERVACIONES
12	09111A12009	4	TORNILLO	SCREW	VIS	
13	08321A31126	4	ARANDELA MUELLE	SPRING WASHER	RONDELLE ELASTIQUE	
14	01707-08253	8	TORNILLO	SCREW	VIS	
	08321B31086	8	ARANDELA	WASHER	RONDELLE	
15	27331-83000	4	PINON SATELITE	SPIDER PINION	PIGNON SATELLITE	
16	27341-83100	2	PINON PLANETARIO	PLANETARY PINION	PIGNON PLANETAIRE	
17	27351-83000	1	EJE PINON SATELITE	SPIDER PINION SHAFT	AXE PIGNON SATELLITE	
18	27355-83000	2	EJE PLANETARIO	PLANETARY SHAFT	AXE PLANETAIRE	
19	27356A63000	1	ALOJAMIENTO PINON	PINION HOUSING	LOGEMENT PIGNON	
20	09164-15006	4	ARANDELA	WASHER	RONDELLE	
21	27411-83000	1	SEMI-CARTER,L/I	SEMI-CASE,L/H	DEMI-CARTER,C/G	
22	09103-10028	10	TORNILLO	SCREW	VIS	
23	27421-83000	1	SEMI-CARTER,L/D	SEMI-CASE,R/H	DEMI-CARTER,C/D	
24	09103-08030	8	TORNILLO	SCREW	VIS	
25	09265-45002	2	RODAMIENTO	BEARING	ROULEMENT	
26	27461-83000	2	TUERCA DE AJUSTE	ADJUSTING SCREW	VIS D'AJUSTAGE	
27	27462-63202	2	PLACA CIERRE	LOCK PLATE	PLAQUE FERMETURE	
28	01104-08126	2	TORNILLO	SCREW	VIS	
	08321B31096	2	ARANDELA	WASHER	RONDELLE	

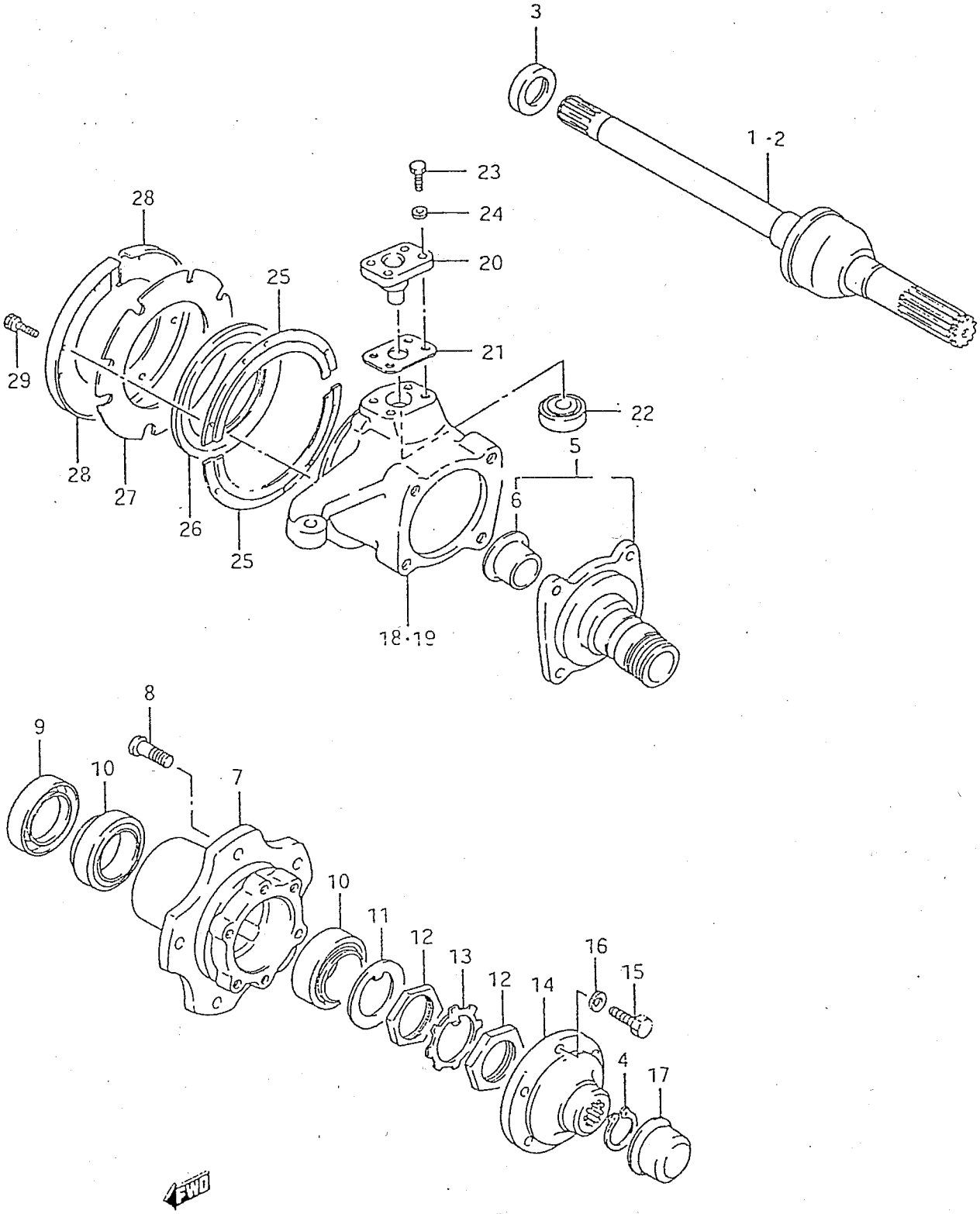
3
1-2
23
24
20
28
25
29
21
22
5
28
27
26
25
6
18·19
8
9
10
7
10
11
12
13
12
14
16
15
4
17
4WD

PUBLICACION N:A01116 GRUPO=TRANSMISION Y EJES SUBGRUPO=G-05PALIER DEL.
EDICION N: 1 GROUP=TRANSMISSION & SHAFT' SUBGROUP=G-05FRONT AXLE SHAFT
GROUPE=TRANSMISSION ET AXES SUBGROUPE=G-05PALIER AVANT

N.FIG PLATE N.FIG	N.PIEZA PARTNUMBER N.PIECE	CAN QTY OUT	DENOMINACION	DESCRIPTION	DENOMINATION	OBSERVACIONES
1	44101A83300	1	PALIER DEL.L/D	FRONT AXLE SHAFT,R/H	PALIER AVANT,C/D	
2	44102A83300	1	PALIER DEL.L/I	FRONT AXLE SHAFT,L/H	PALIER AVANT,C/G	
3	09283-26016	2	RETEN	SEAL	ARRETOIR	
4	08331-31266	2	CIRCLIP	CIRCLIP	CIRCLIP	
5	43440-80004	2	MANGUETA DELANTERA	FRONT HOSE	TUYAU AVANT	
6	43445-80002	2	CASQUILLO	BUSH	BAGUE	
7	43421-80002	2	CUBO RUEDA DEL.	FRONT WHEEL HUB	MOYEU ROUE AVANT	
8	09119-12008	10	TORNILLO	SCREW	VIS	
9	09283-50002	2	RETEN	SEAL	ARRETOIR	
10	09265A41001	4	RODAMIENTO	BEARING	ROULEMENT	
11	43465-80000	2	ARANDELA	WASHER	RONDELLE	
12	43461-80000	4	TUERCA	NUT	ECROU	
13	43466-80000	2	ARANDELA DE CIERRE	LOCK WASHER	RONDELLE FERMETURE	
14	43471-80001	2	BRIDA	CLAMP	COLLIER	
15	01107-08256	12	TORNILLO	SCREW	VIS	
16	08321B31086	12	ARANDELA	WASHER	RONDELLE	
17	43241-80001	2	TAPACUBOS	HUB CAP	ENJOLIVEUR	
18	45111-80001	1	ALOJAMIENTO,L/D	HOUSING,R/H	LOGEMENT,C/D	
19	45151-80001	1	ALOJAMIENTO,L/I	HOUSING,L/H	LOGEMENT,C/G	
20	45610-63001	4	SEMIEJE DE GIRO	ROTATION HALF-SHAFT	DEMI-AXE ROTATION	
21	45621-63000	6	SUPLEMENTO 0,5	SHIM 0,5	SUPPLEMENT 0,5	
	45622-63000	4	SUPLEMENTO 1,0	SHIM 1,0	SUPPLEMENT 1,0	
22	09265A15002	4	RODAMIENTO	BEARING	ROULEMENT	
23	01107-08206	16	TORNILLO	SCREW	VIS	
24	08321B31086	16	ARANDELA	WASHER	RONDELLE	
25	45623-80001	4	PLACA RETENCION	RETAINING PLATE	PLAQUE DE RETENUE	
26	09285-00002	2	RETEN	SEAL	ARRETOIR	
27	45624-63001	2	ARANDELA FIELTRO	FELT WASHER	RONDELLE FEUTRE	
28	45625-63001	4	TAPA RETEN	SEAL COVER	COUVERCLE ARRETOIR	
29	45626-63000	16	TORNILLO	SCREW	VIS	

FIG.48

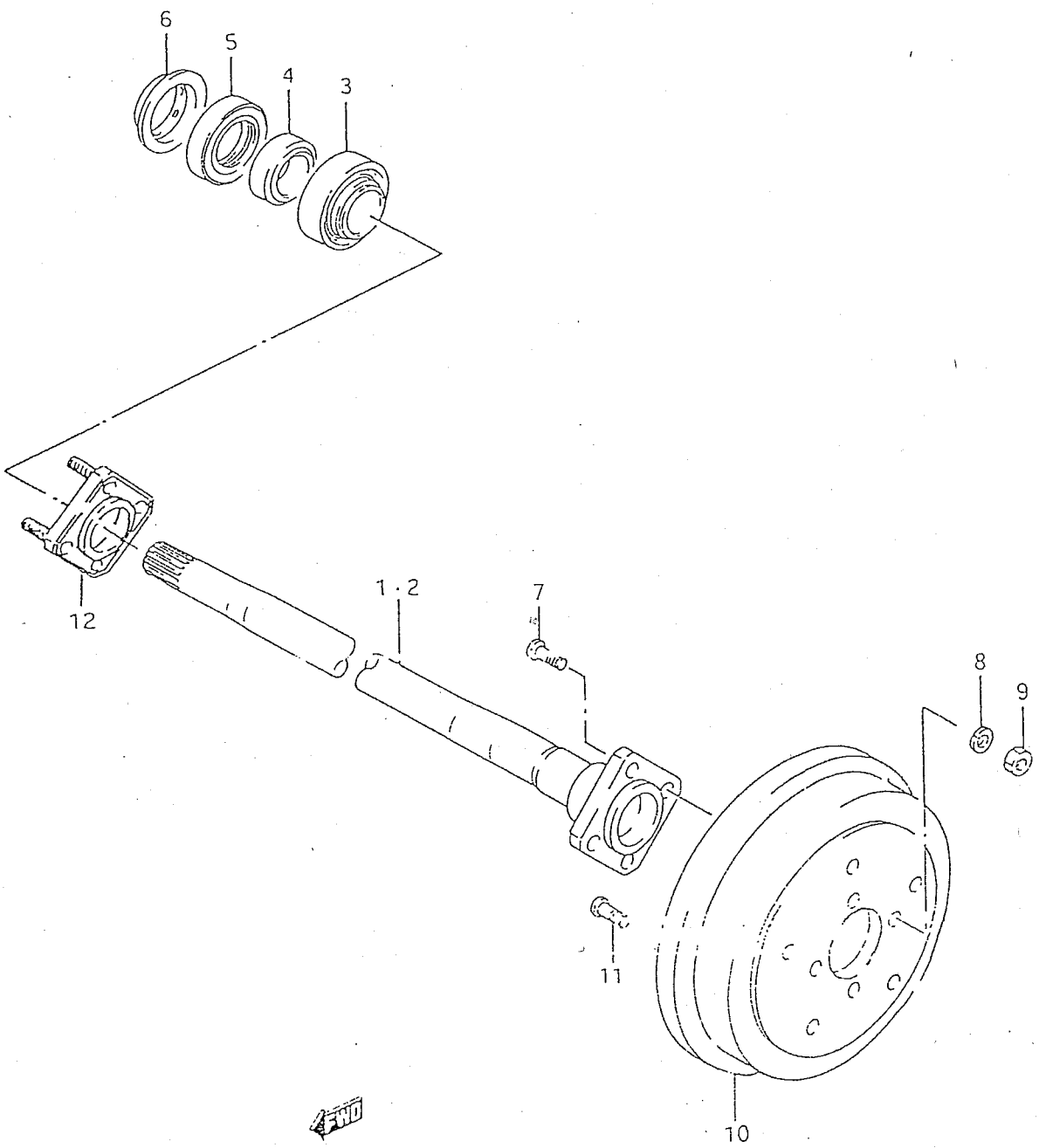

PUBLICACION N:A01116 GRUPO=TRANSMISION Y EJES SUBGRUPO=G-06PALIER TRAS.
EDICION N: 1 GROUP=TRANSMISSION & SHAFT SUBGROUP=G-06REAR AXLE SHAFT
GROUPE=TRANSMISSION ET AXES SUBGROUPE=G-06PALIER ARRIERE

N.FIG PLATE N.FIG	N.PIEZA PARTNUMBER N.PIECE	CAN QTY OUT	DENOMINACION	DESCRIPTION	DENOMINATION	OBSERVACIONES
1	44210-83301	1	PALIER TRAS.L/D	REAR AXLE SHAFT,R/H	PALIER ARRIERE,C/D	
2	44220-83301	1	PALIER TRAS.L/I	REAR AXLE SHAFT,L/H	PALIER ARRIERE,C/G	
3	09262A35007	2	RODAMIENTO	BEARING	ROULEMENT	
	44131-73001	2	ESPACIADOR	SPACER	SEPARATEUR	
4	43485-73000	2	ANILLO RETENCION	RETAINING RING	ANNEAU DE RETENUE	
5	09283-48007	2	RETEN	SEAL	ARRETOIR	
6	43588-73000	2	PROTECTOR RETEN	SEAL PROTECTOR	PROTECTEUR ARRETOIR	
7	09119A12007	8	TORNILLO CUBO TRAS.	REAR HUB SCREW	VIS MOYEU ARRIERE	
8	08321A31123	8	ARANDELA	WASHER	RONDELLE	
9	08310-11123	8	TUERCA	NUT	ECROU	
10	43511A83003	2	TAMBOR DE FRENO	BRAKE DRUM	TAMBOUR DE FREIN	
11	09119A12007	10	TORNILLO	SCREW	VIS	
12	53001B83040	2	CHAPA RETENCION	RETAINING PLATE	PLAQUE RETENUE	
13	44211-80000	2	BRIDA	CLAMP	COLLIER	NOT SHOWN

FIG.49

G-07

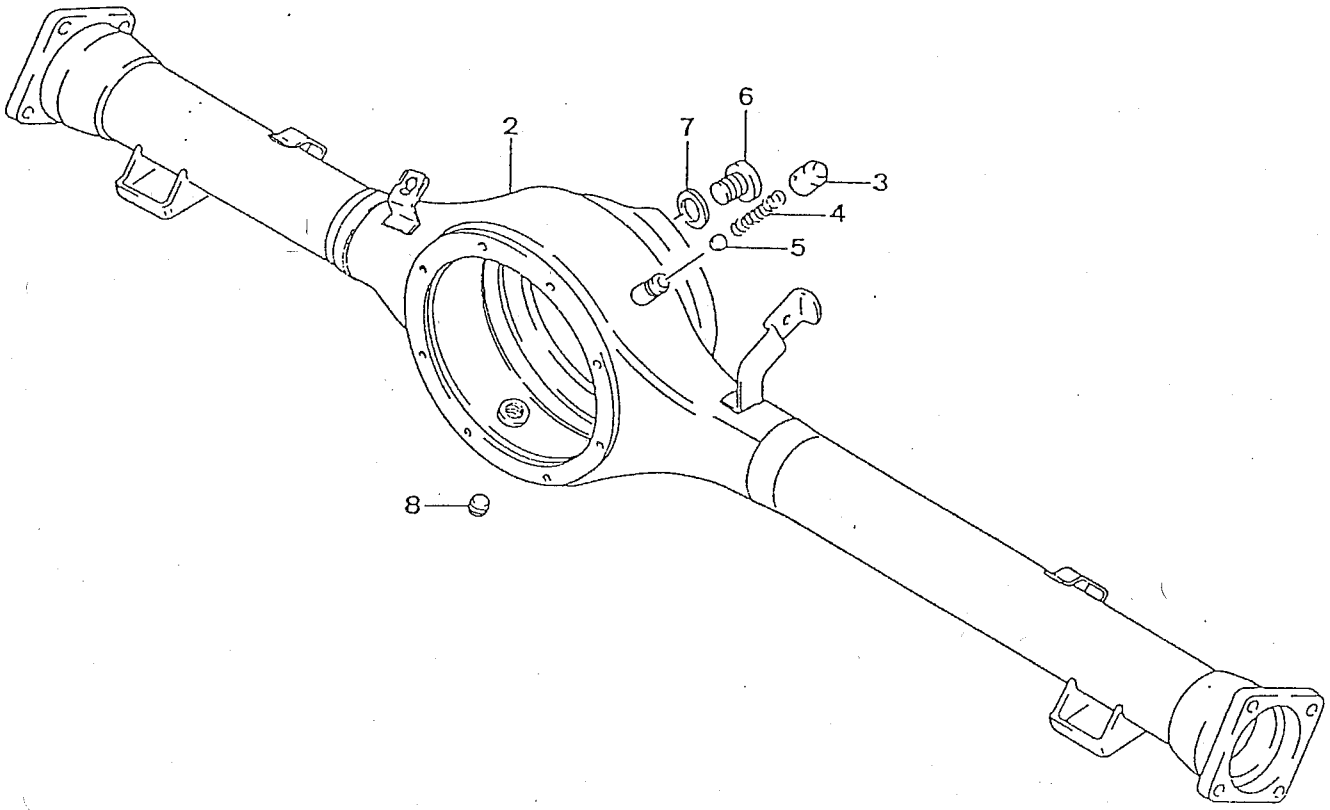

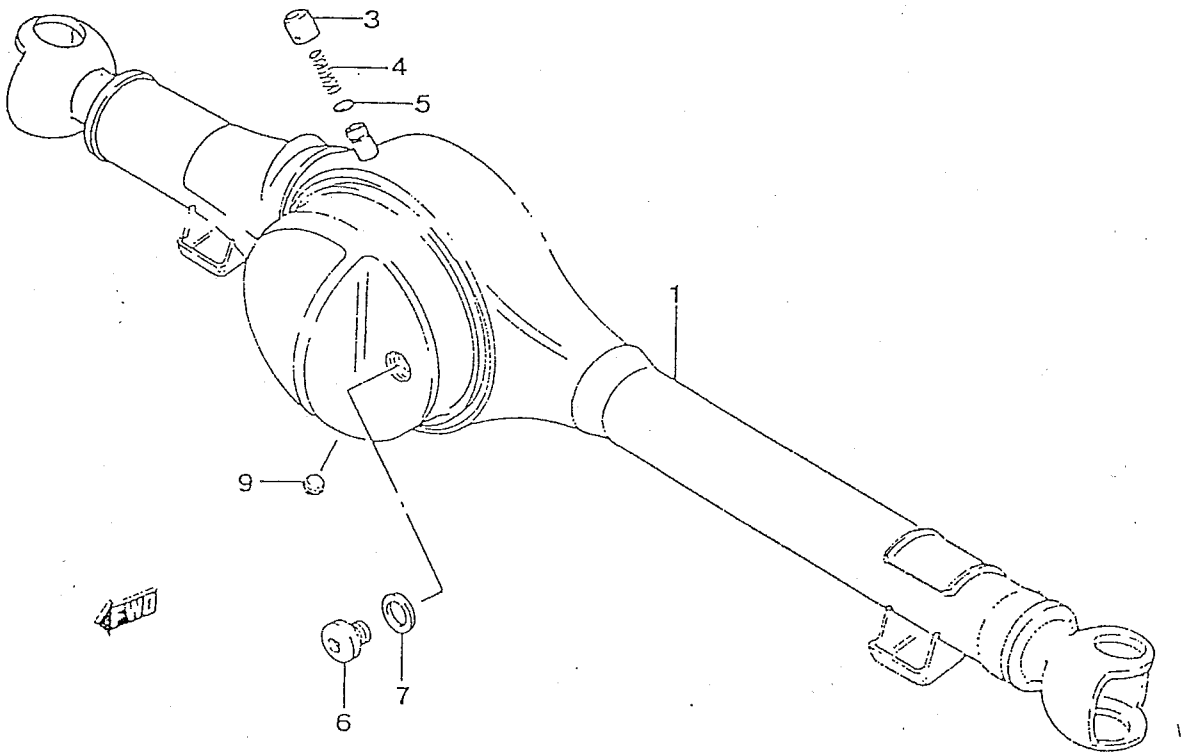

PUBLICACION N:A01116 GRUPO=TRANSMISION Y EJES SUBGRUPO=G-07CARTER EJE
EDICION N: 1 GROUP=TRANSMISSION & SHAFT SUBGROUP=G-07SHAFT CASE
GROUPE=TRANSMISSION ET AXES SUBGROUPE=G-07CARTER AXE

N.FIG PLATE N.FIG	N.PIEZA PARTNUMBER N.PIECE	CAN QTY OUT	DENOMINACION	DESCRIPTION	DENOMINATION	OBSERVACIONES
1	46480-83303	1	CARTER DELANTERO	FRONT CASE	CARTER AVANT	
2	46510A70A00	1	CARTER TRASERO	REAR CASE	CARTER ARRIERE	
3	46541-52002	2	TAPON RESPIRADERO	BREATHER PLUG	BOUCHON RESPIRATEUR	
4	09440-12004	2	MUELLE	SPRING	RESSORT	
5	46542-52000	2	VALVULA	VALVE	SOUPAPE	
6	09246A16009	2	TAPON NIVEL ACEITE	OIL LEVEL PLUG	BOUCHON NIVEAU HUILE	
7	09168-20002	2	JUNTA	GASKET	JOINT	
8	09246A16010	1	TAPON DRENAJE	DRAIN PLUG	BOUCHON DRAINAGE	
9	09246-16009	1	TAPON VACIADO	VACUUM PLUG	BOUCHON VIDANGE	

FIG.50

G-08

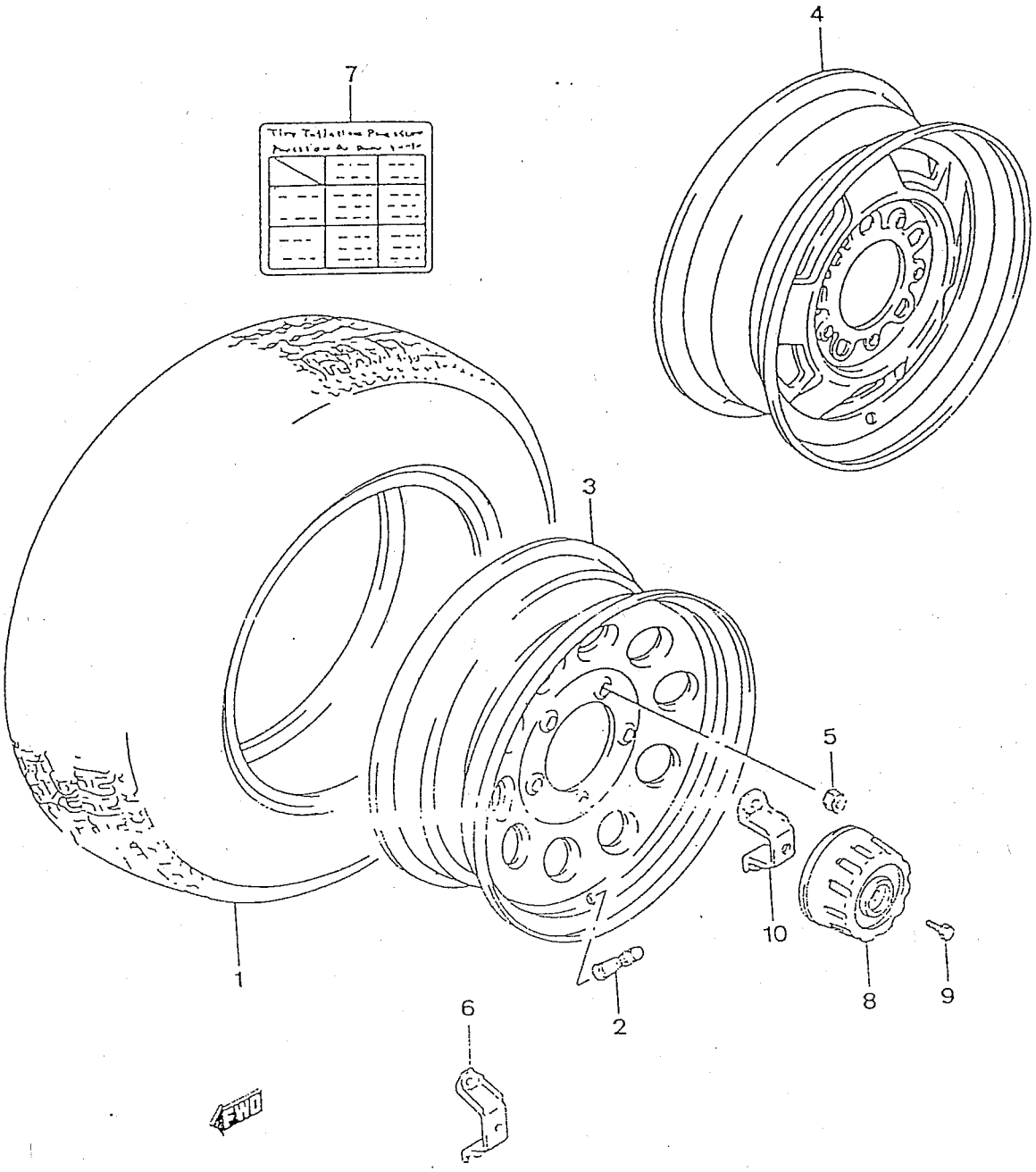

PUBLICACION N:A01116 GRUPO=TRANSMISION Y EJES SUBGRUPO=G-08RUEDA/NEUMATICO
EDICION N: 1 GROUP=TRANSMISSION & SHAFT SUBGROUP=G-08WHEEL/TYRE
GROUPE=TRANSMISSION ET AXES SUBGROUPE=G-08ROUE/PNEU

N.FIG PLATE N.FIG	N.PIEZA PARTNUMBER N.PIECE	CAN QTY OUT	DENOMINACION	DESCRIPTION	DENOMINATION	OBSERVACIONES
1	43110A70A00	5	NEUMATICO MICHELIN	MICHELIN TYRE	PNEU MICHELIN	205/70R15
	43110A70A10	5	NEUMATICO DUNLOP	DUNLOP TYRE	PNEU DUNLOP	205/70R15
	43110B70A00	5	NEUMATICO PIRELLI	PIRELLI TYRE	PNEU PIRELLI	205/70R15
	43110C70A00	5	NEUMATICO FIRESTONE	FIRESTONE TYRE	PNEU FIRESTONE	205/70R15
2	43130A78030	5	VALVULA	VALVE	SOUPAPE	
3	43210A70A00	5	DISCO RUEDA	WHEEL DISC	DISQUE DE ROUE	T1
	43210A70A01	5	DISCO RUEDA	WHEEL DISC	DISQUE DE ROUE	T2,T3
4	43210C70A01	5	DISCO RUEDA	WHEEL DISC	DISQUE DE ROUE	T2,T3-ALTERN.
5	09140-12026	20	TUERCA	NUT	ECROU	
6	43271-80000	2	SOPORTE TRASERO	REAR BRACKET	SUPPORT ARRIERE	
7	79161B80000	1	PLACA PRESION NEUMAT	TYRE PRESSURE PLATE	PLAQUE PRESSION PNEU	
8	43252-80000	4	EMBELLECEDOR	TRIM	ENJOLIVEUR	
9	09100-08253	4	TORNILLO	SCREW	VIS	
10	43261-80000	2	SOPORTE DELANTERO	FRONT BRACKET	SUPPORT AVANT	

GRUPO 07 DIRECCION

GROUP 07 STEERING

GROUP 07 DIRECTION

COMPOSICION.....COMPOSITION.....COMPOSICION

REFERENCIA PARTNUMBER NUM.PIECE	DENOMINACION	DESCRIPTION	DENOMINATION
407051	H-02SUSPENSION DEL.	H-02FRONT SUSPENSION	H-02SUSPENSION AVANT
407052	H-03SUSPENSION TRAS.	H-03REAR SUSPENSION	H-03SUSPENSION ARR.
407053	H-04BARRA ESTABILIZ.	H-04STABILIZER BAR	H-04BARRE STABILISAT
407054	H-05VOLANTE DIR.	H-05STEERING WHEEL	H-05VOLANT DIRECTION
407055	H-06COLUMNA DIR.	H-06STEERING COLUMN	H-06COLONNE DIRECT.
407056	H-07CAJA/BARRA DIR.	H-07STEER.BOX/BAR	H-07BOITE/BARRE DIR.
407057	H-08BASTIDOR	H-08CHASSIS	H-08CHASSIS
407057.1	H-08.1BASTIDOR	H-08.1CHASSIS	H-08.1CHASSIS

FIG.51

H-02

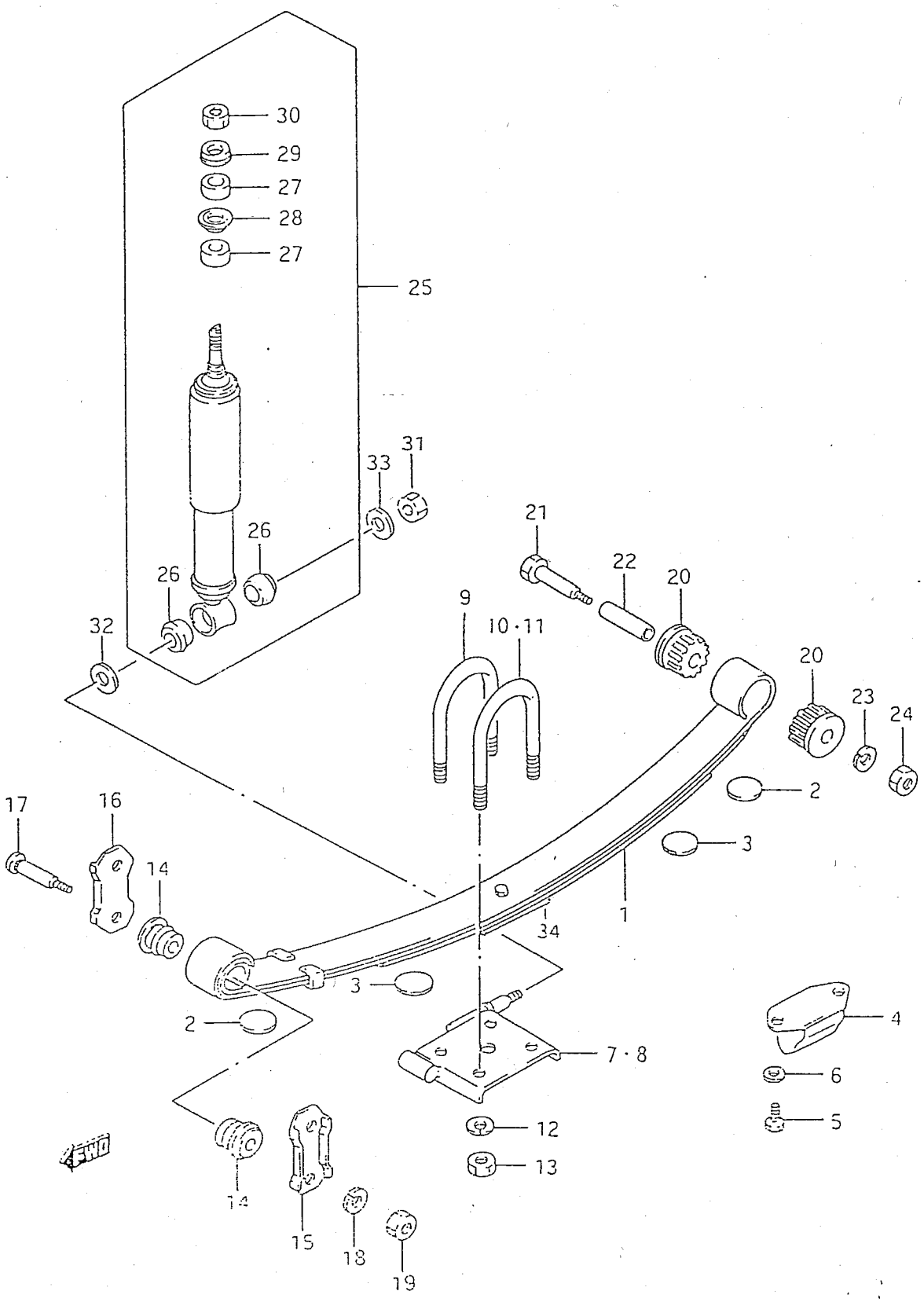
30
29
27
28
27
25
31
33
26
26
32
21
22
20
9
10·11
20
23
24
2
3
17
16
14
1
34
3
2
7·8
4
6
5
12
13
14
15
18
19

PUBLICACION N:A01116 GRUPO=DIRECCION SUBGRUPO=H-02SUSPENSION DEL.
EDICION N: 1 GROUP=STEERING SUBGROUP=H-02FRONT SUSPENSION
GROUPE=DIRECTION SUBGROUPE=H-02SUSPENSION AVANT

N.FIG PLATE N.FIG	N.PIEZA PARTNUMBER N.PIECE	CAN QTY OUT	DENOMINACION	DESCRIPTION	DENOMINATION	OBSERVACIONES
1	41110-70A00	2	BALLESTA DELANTERA	FRONT SPRING	RESSORT A LAMES AV.	
2	41118-70A00	4	TOPE DE GOMA	RUBBER STOP	ARRET CAOUTCHOUC	
3	41117-70A00	4	TOPE DE GOMA	RUBBER STOP	ARRET CAOUTCHOUC	
4	42110-80010	2	TOPE DE GOMA	RUBBER STOP	ARRET CAOUTCHOUC	
5	01104-08163	4	TORNILLO	SCREW	VIS	
6	08321B31086	4	ARANDELA	WASHER	RONDELLE	
7	41230-70A00	1	PLACA,L/D	PLATE,R/H	PLAQUE,C/D	
8	41240-70A00	1	PLACA,L/I	PLATE,L/H	PLAQUE,C/G	
9	41411-83010	2	ABARCON,L/D	BRACKET,R/H	SUPPORT,C/D	
10	41411-83000	2	ABARCON,L/I	BRACKET,L/H	SUPPORT,C/G	
11	41411-83020	1	ABARCON INT.L/D	INNER BRACKET,R/H	SUPPORT INT.C/D	H 96641
12	08321A31123	8	ARANDELA	WASHER	RONDELLE	
13	08310-11123	8	TUERCA	NUT	ECROU	
14	09305-13006	8	CASQUILLO GEMELO	SHACKLE BUSH	BAGUE JUMELLEE	
15	41461-79000	2	PLACA INT.GEMELA	TWIN INNER PLATE	PLAQUE INT.JUMELLE	
16	41462-79000	2	PLACA EXT.GEMELA	TWIN OUTER PLATE	PLAQUE EXT.JUMELLE	
17	41463-82000	4	PERNO GEMELA	SHACKLE PIN	BOULON JUMELLE	
18	08321A31103	4	ARANDELA	WASHER	RONDELLE	
19	08310-11103	4	TUERCA	NUT	ECROU	
20	41331-62020	4	CASQUILLO BALLESTA	SPRING BUSH	BAGUE RESSORT A LAME	
21	09100-12059	2	TORNILLO	SCREW	VIS	
22	09180-12035	2	CASQUILLO	BUSH	VIS	
23	08321A31123	2	ARANDELA	WASHER	RONDELLE	
24	08310-11123	2	TUERCA	NUT	ECROU	
25	40047-00000	2	AMORTIGUADOR	DAMPER	AMORTISSEUR	ALTERN.
	41600B70A00	2	AMORTIGUADOR	DAMPER	AMORTISSEUR	
26	40025-00000	4	CASQUILLO	BUSH	BAGUE	
	41781A80000	4	CASQUILLO	BUSH	BAGUE	ALTERN.
27	40026-00000	4	CASQUILLO GOMA	RUBBER BUSH	BAGUE CAOUTCHOUC	
	41792A51110	4	CASQUILLO GOMA	RUBBER BUSH	BAGUE CAOUTCHOUC	ALTERN.
28	40027-00000	2	ARANDELA	WASHER	RONDELLE	
	41793A51110	2	ARANDELA	WASHER	RONDELLE	ALTERN.
29	40028-00000	4	ARANDELA	WASHER	RONDELLE	
	41794A51110	4	ARANDELA	WASHER	RONDELLE	ALTERN.
30	08312A21108	2	TUERCA	NUT	ECROU	ALTERN.
	08312A31108	2	TUERCA	NUT	ECROU	ALTERN.
	40029-00000	2	TUERCA	NUT	ECROU	
31	08310-11123	2	TUERCA	NUT	ECROU	
32	08322A21163	2	ARANDELA	WASHER	RONDELLE	
33	09160-12073	2	ARANDELA	WASHER	RONDELLE	
34	41116-83000	4	SEPARADOR CENTRAL	CENTRAL SEPARATOR	SEPARATEUR CENTRAL	

FIG.52

H-03

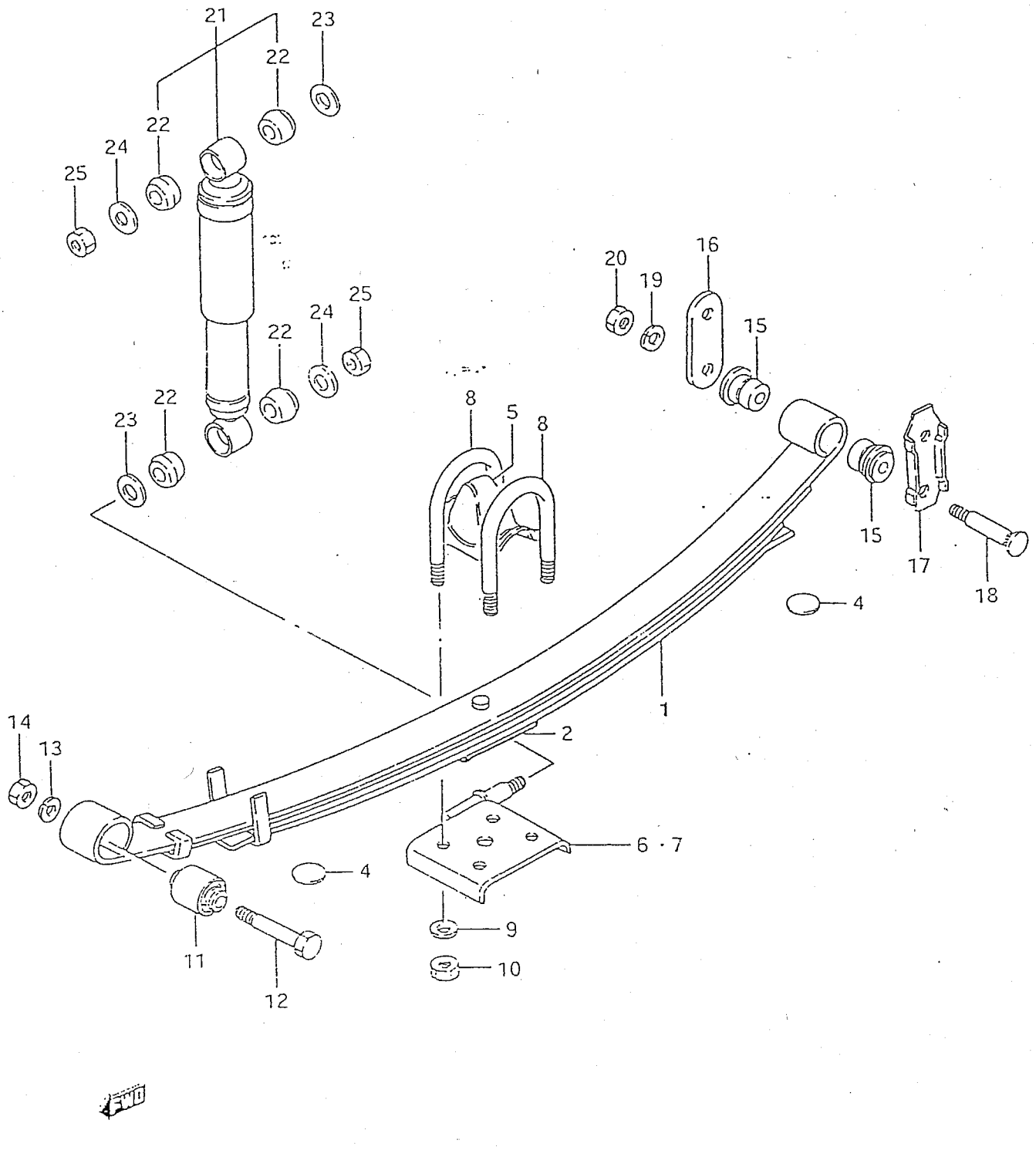
21
22
23
22
24
25
25
24
22
22
23
8
5
8
20
19
16
15
15
17
18
4
1
14
13
2
6 · 7
4
9
10
11
12
FWD

PUBLICACION N:A01116 GRUPO=DIRECCION SUBGRUPO=H-03SUSPENSION TRAS.
EDICION N: 1 GROUP=STEERING SUBGROUP=H-03REAR SUSPENSION
GROUPE=DIRECTION SUBGROUPE=H-03SUSPENSION ARR.

N.FIG PLATE N.FIG	N.PIEZA PARTNUMBER N.PIECE	CAN QTY OUT	DENOMINACION	DESCRIPTION	DENOMINATION	OBSERVACIONES
1	41310-70A10	2	C/BALLESTA	SPRING ASSY	ENS.RESSORT A LAMES	
2	41116-83000	2	SEPARADOR CENTRAL	CENTRAL SEPARATOR	SEPARATEUR CENTRAL	
3	41318-83010	2	ABRAZADERA	CLAMP	COLLIER	NOT SHOWN
4	41118-70A00	8	CASQUILLO	BUSH	BAGUE	
5	42150A83000	2	TOPE DE GOMA	RUBBER STOP	BUTEE CAOUTCHOUC	
6	41430-83000	1	PLACA BALLESTA,L/D	SPRING PLATE,R/H	PLAQUE RESSORT,C/D	
7	41440-83000	1	PLACA BALLESTA,L/I	SPRING PLATE,L/H	PLAQUE RESSORT,C/G	
8	41411A83000	4	ABARCON BALLEST.TRAS	REAR SPRING BRACKET	SUPPORT RESSORT ARR.	
9	08321A31123	8	ARANDELA	WASHER	RONDELLE	
10	08310-11123	8	TUERCA	NUT	ECROU	
11	09319-12023	2	CASQUILLO	BUSH	BAGUE	
12	09100-12059	2	TORNILLO	SCREW	VIS	
13	08321A31123	2	ARANDELA	WASHER	RONDELLE	
14	08310-11123	2	TUERCA	NUT	ECROU	
15	09305-13006	8	CASQUILLO BALLESTA	SPRING BUSH	BAGUE RESSORT	
16	41461-83300	2	PLACA GEMELA INT.	INNER TWIN PLATE	PLAQUE JUMELLE INT.	
17	41462-79000	2	PLACA GEMELA EXT.	OUTER TWIN PLATE	PLAQUE JUMELLE EXT.	
18	41463-82000	4	PERNO GEMELA	SHACKLE BOLT	VIS JUMELEE	
19	08321A31103	4	ARANDELA	WASHER	RONDELLE	
20	08310-11103	4	TUERCA	NUT	ECROU	
21	40050-00000	2	AMORTIGUADOR	DAMPER	AMORTISSEUR	ALTERN.
	41700B70A00	2	AMORTIGUADOR	DAMPER	AMORTISSEUR	
22	40025-00000	8	CASQUILLO GOMA	RUBBER BUSH	BAGUE CAOUTCHOUC	
	41781A80000	8	CASQUILLO GOMA	RUBBER BUSH	BAGUE CAOUTCHOUC	ALTERN.
23	08322A21163	4	ARANDELA	WASHER	RONDELLE	
24	09160-12073	4	ARANDELA	WASHER	RONDELLE	
25	08310-11123	4	TUERCA	NUT	ECROU	

FIG.53

H-04

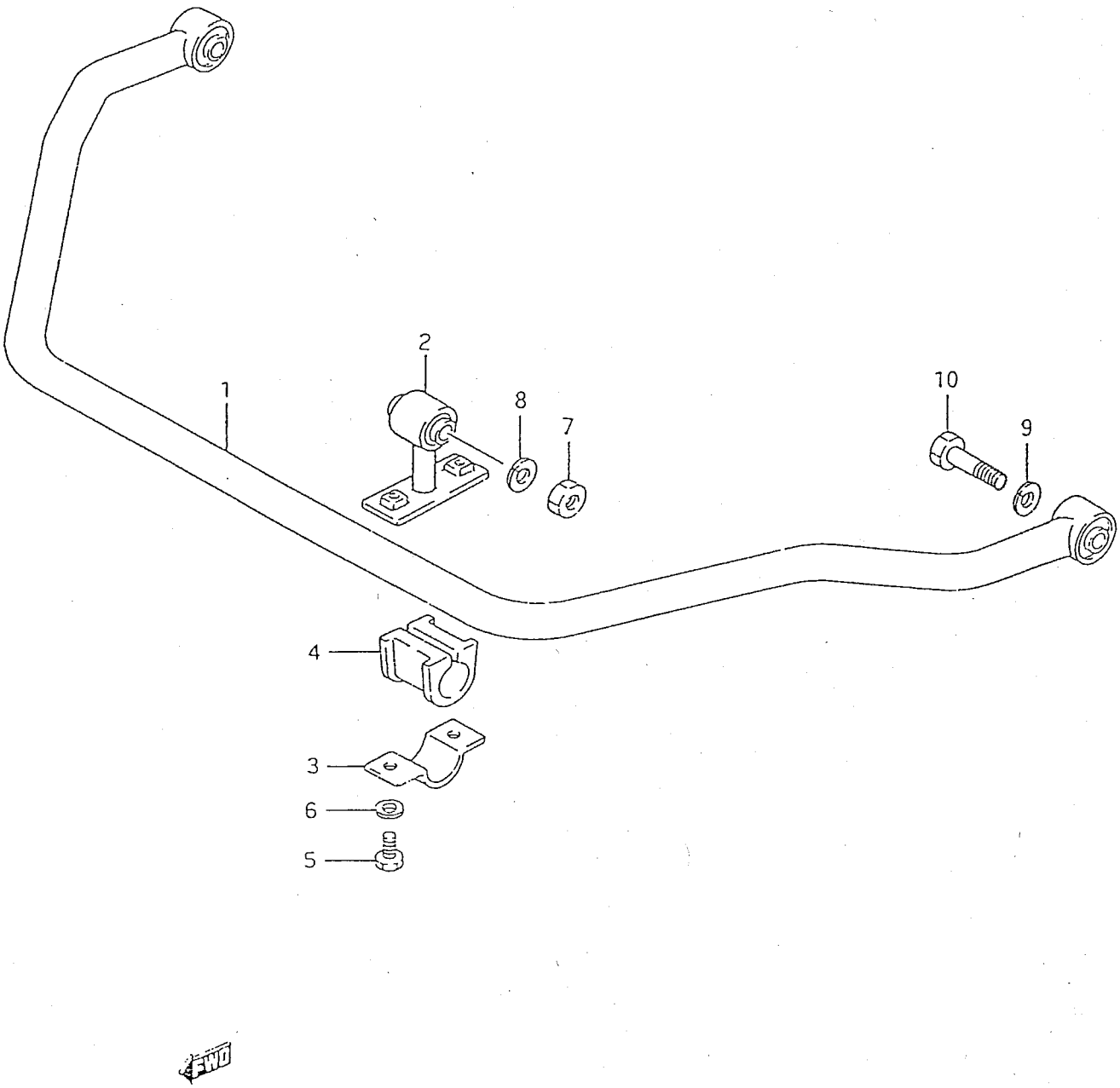

PUBLICACION N:A01116 GRUPO=DIRECCION SUBGRUPO=H-04BARRA ESTABILIZ.
EDICION N: 1 GROUP=STEERING SUBGROUP=H-04STABILIZER BAR
GROUPE=DIRECTION SUBGROUPE=H-04BARRE STABILISAT

N.FIG PLATE N.FIG	N.PIEZA PARTNUMBER N.PIECE	CAN QTY OUT	DENOMINACION	DESCRIPTION	DENOMINATION	OBSERVACIONES
1	42300-70A00	1	BARRA ESTABILIZADORA	STABILIZER BAR	BARRE STABILISATRICE	
2	42400-83001	2	SOPORTE DELANTERO	FRONT BRACKET	SUPPORT AVANT	
3	42415-83000	2	PLACA SOPORTE	BRACKET PLATE	PLAQUE SUPPORT	
4	42412-70A00	2	CASQUILLO	BUSH	BAGUE	
5	01707-08203	4	TORNILLO	SCREW	VIS	
6	08321B31086	4	ARANDELA	WASHER	RONDELLE	
7	08310-11103	2	TUERCA	NUT	ECROU	
8	08321B31103	2	ARANDELA	WASHER	RONDELLE	
9	08321A31123	2	ARANDELA	WASHER	RONDELLE	
10	09100-12041	2	TORNILLO DELANTERO	FRONT SCREW	VIS AVANT	

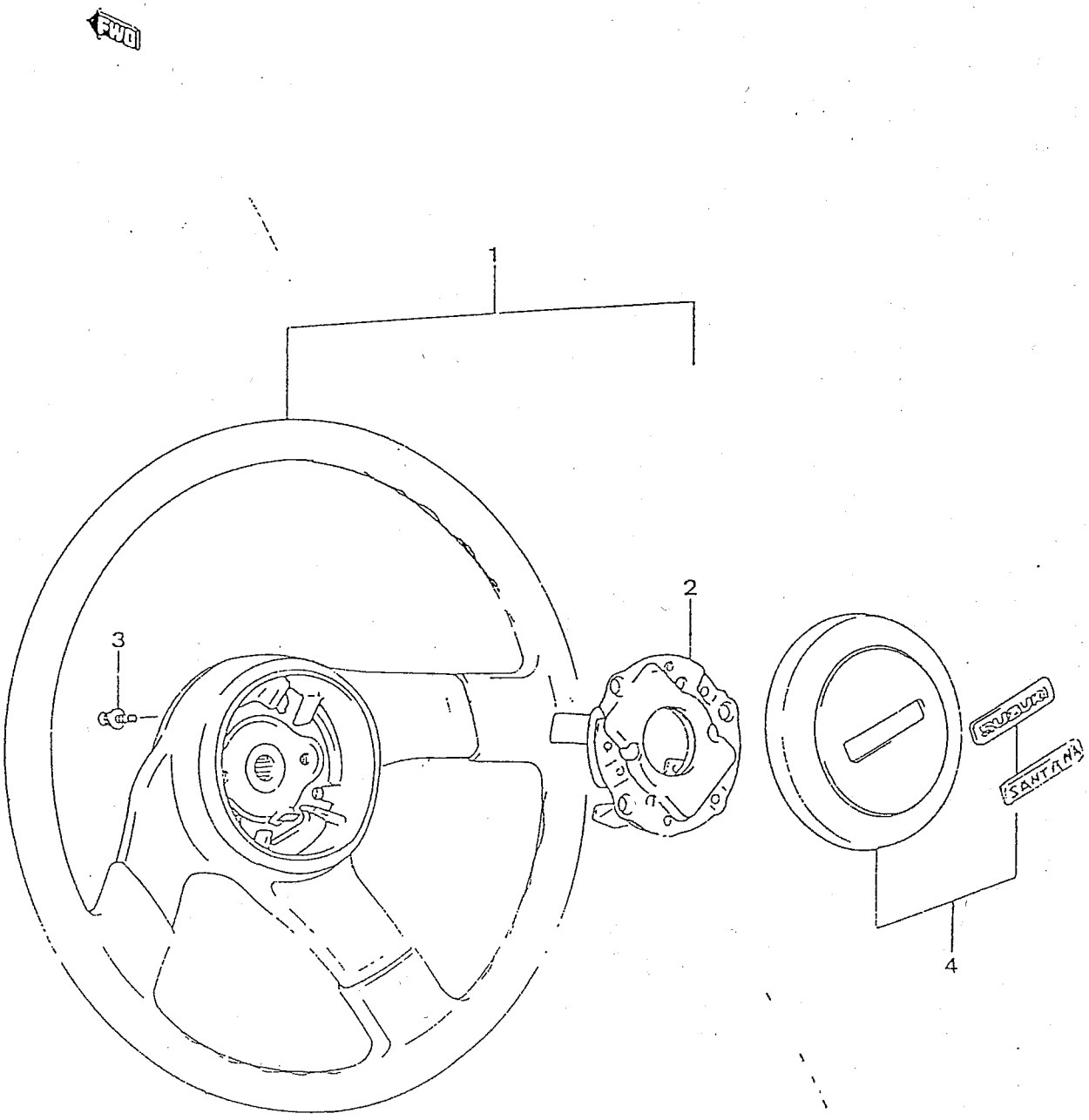
1
2
3
4
SUZUKI
SANTANA

PUBLICACION N:A01116 GRUPO=DIRECCION SUBGRUPO=H-05VOLANTE DIR.
EDICION N: 1 GROUP=STEERING SUBGROUP=H-05STEERING WHEEL
GROUPE=DIRECTION SUBGROUPE=H-05VOLANT DIRECTION

N.FIG PLATE N.FIG	N.PIEZA PARTNUMBER N.PIECE	CAN QTY OUT	DENOMINACION	DESCRIPTION	DENOMINATION	OBSERVACIONES
1	48110A70A00	1	VOLANTE GRIS	GREY STEERING WHEEL	VOLANT GRIS	
2	35299-00000	1	GOLPEADOR	STOP	BUTEE	
3	02112-05105	1	TORNILLO	SCREW	VIS	
	04001-00000	1	TUERCA	NUT	ECROU	
4	48120A70A00	1	TAPA SUZUKI GRIS	SUZUKI COVER,GREY	COUVERCL.SUZUKI GRIS	
	48120C70A00	1	TAPA SANTANA GRIS	SANTANA COVER,GREY	COUVER.SANTANA GRIS	E04

FIG.55

H-06

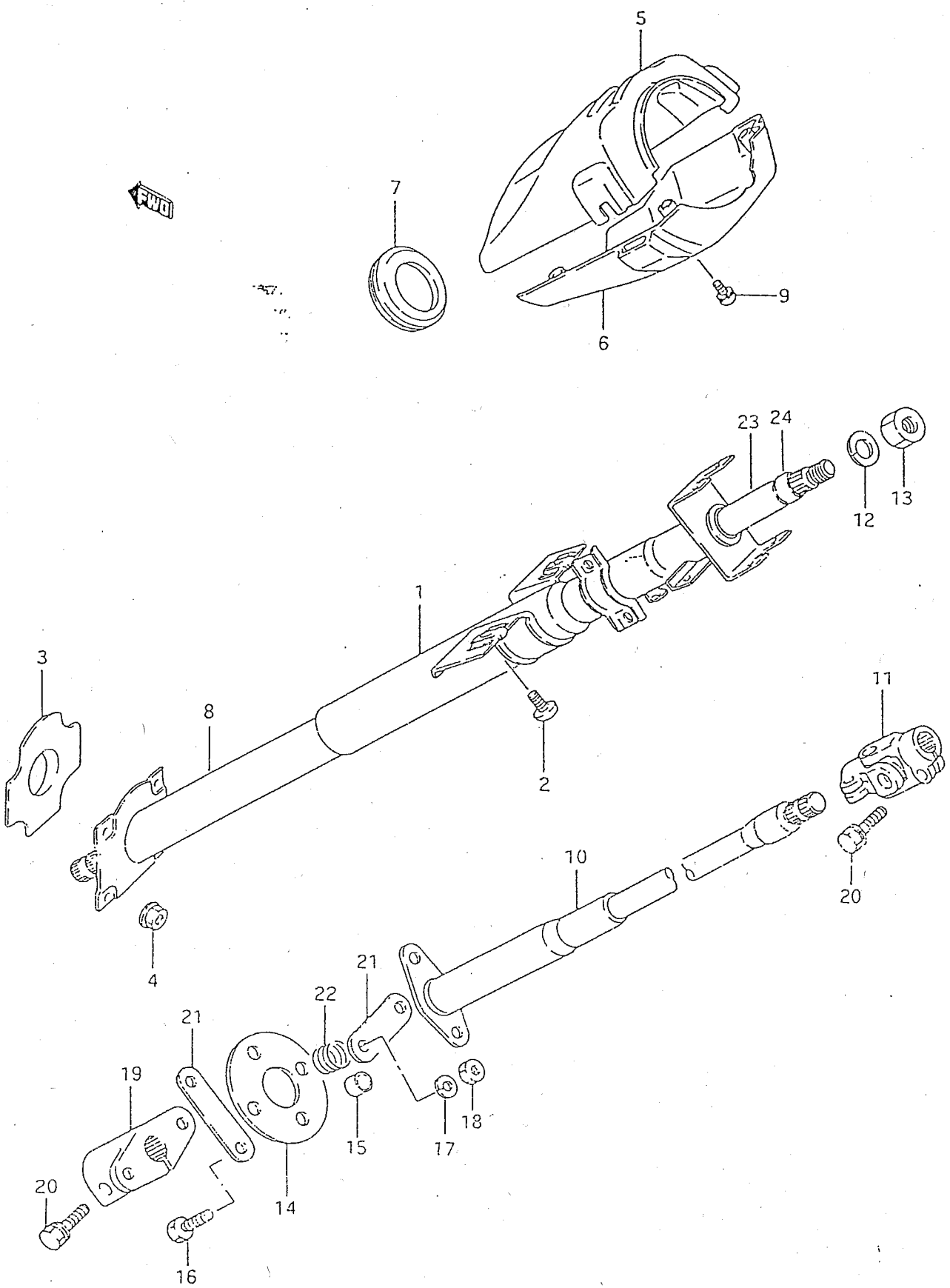

PUBLICACION N:A01116 GRUPO=DIRECCION SUBGRUPO=H-06COLUMNA DIR.
EDICION N: 1 GROUP=STEERING SUBGROUP=H-06STEERING COLUMN
GROUPE=DIRECTION SUBGROUPE=H-06COLONNE DIRECT.

N.FIG PLATE N.FIG	N.PIEZA PARTNUMBER N.PIECE	CAN QTY OUT	DENOMINACION	DESCRIPTION	DENOMINATION	OBSERVACIONES
1	48200C80210	1	C/COLUMNA DIRECCION	STEERING COLUMN ASSY	ENS.COLONNE DIRECT.	
2	09103A08152	2	TORNILLO	SCREW	VIS	
3	48491-80000	1	RETEN	SEAL	ARRETOIR	
4	08316A16086	4	TUERCA	NUT	ECROU	
5	48411A80350-5ES	1	CUBIERTA SUPERIOR	UPPER COVER	COUVERCLE SUPERIEUR	
6	48421A80300-5ES	1	CUBIERTA INFERIOR	LOWER COVER	COUVERCLE INFERIEUR	
7	00000A00262	1	ANILLO SEGURIDAD	SAFETY RING	ANNEAU SURETE	
8	00000A00257	1	TUBO Y RODAMIENTO	BEARING AND HOSE	TUYAU ET ROULEMENT	
9	02112-05105	3	TORNILLO	SCREW	VIS	
	03111-05303	2	TORNILLO	SCREW	VIS	D 123612
	08322-21056	3	ARANDELA	WASHER	RONDELLE	
10	48220B80110	1	EJE INF.VOLANTE	ST.WHEEL LOWER SHAFT	AXE INF.VOLANT	
11	48230-80120	1	ARTICULACION	LINK	ARTICULATION	
12	00000A00123	1	ARANDELA	WASHER	RONDELLE	
13	00000A00122	1	TUERCA	NUT	ECROU	
14	48251-52000	1	JUNTA FLEXIBLE	SPRING GASKET	JOINT FLEXIBLE	
15	09180-08007	4	CASQUILLO	BUSH	BAGUE	
16	09100-08184	4	TORNILLO	SCREW	VIS	
17	08321B31086	4	ARANDELA	WASHER	RONDELLE	
18	08310-11086	4	TUERCA	NUT	ECROU	
19	48270-80000	1	BRIDA	CLAMP	COLLIER	
20	08321B31086	1	ARANDELA	WASHER	RONDELLE	
	09100-08218	1	TORNILLO	SCREW	VIS	T2,T3
	09111-08066	1	TORNILLO	SCREW	VIS	T1
	09117-08042	3	TORNILLO	SCREW	VIS	T2,T3
21	48262-58000	2	PLACA	PLATE	PLAQUE	
22	48281-85000	1	MUELLE	SPRING	RESSORT	
23	00000A00260	1	SUB-CONJUNTO EJE	AXLE SUB-ASSY	SOUS-ENSEMBLE AXE	
24	00000A00261	1	CASQUILLO	BUSH	BAGUE	

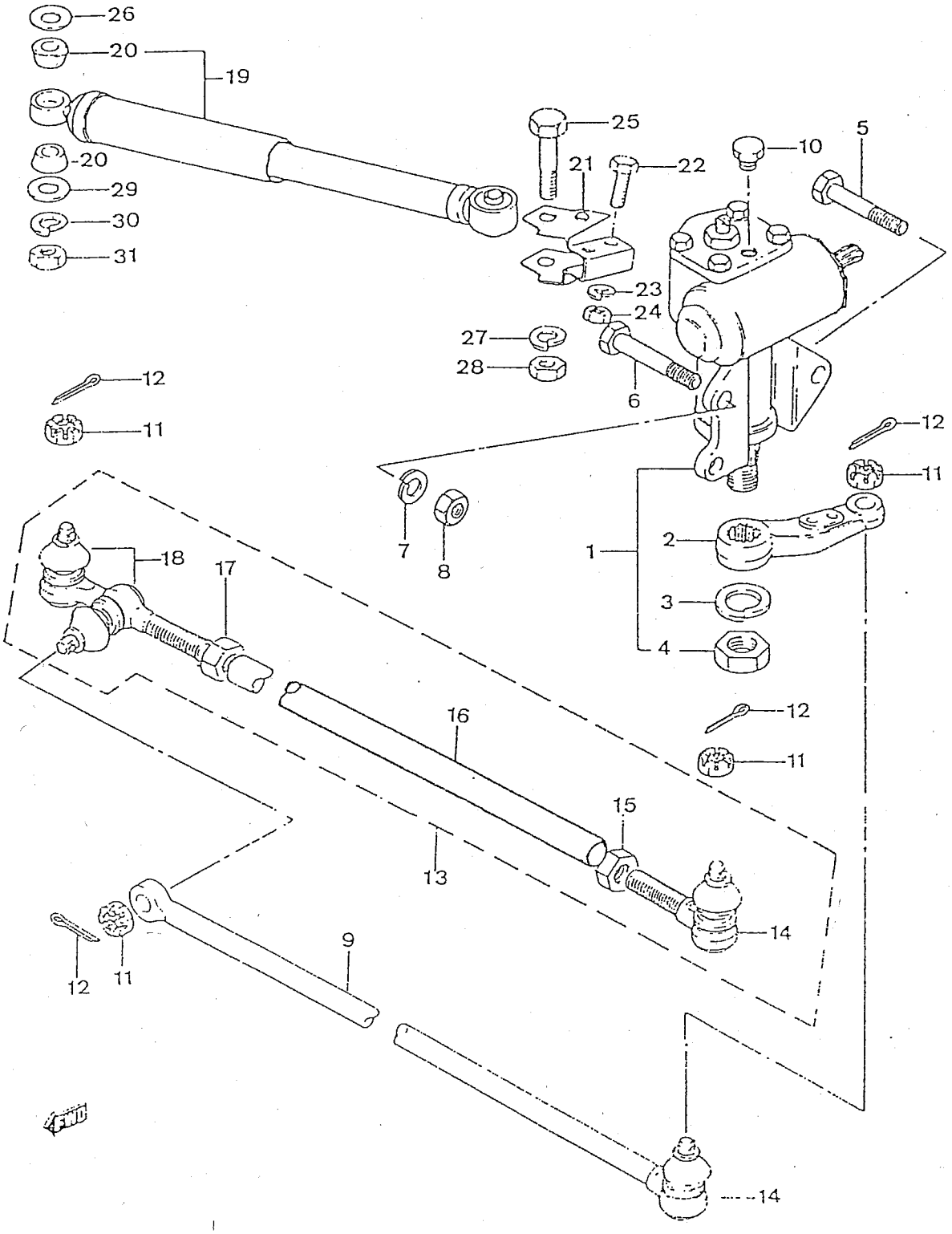
26
20
19
20
29
30
31
25
21
22
10
5
23
24
27
28
6
12
11
12
11
7
8
1
2
3
4
18
17
16
12
11
15
13
14
9
12
11
14

PUBLICACION N:A01116 GRUPO=DIRECCION SUBGRUPO=H-07CAJA/BARRA DIR.
EDICION N: 1 GROUP=STEERING SUBGROUP=H-07STEER.BOX/BAR
GROUPE=DIRECTION SUBGROUPE=H-07BOITE/BARRE DIR.

N.FIG PLATE N.FIG	N.PIEZA PARTNUMBER N.PIECE	CAN QTY OUT	DENOMINACION	DESCRIPTION	DENOMINATION	OBSERVACIONES
1	48600-80070	1	C/CAJA DIRECCION	STEERING BOX ASSY	ENS.BOITE DIRECTION	
2	48671-80060	1	BIELA DIRECCION	STEER.CONNECTING ROD	BIELLE DIRECTION	
3	08321-21206	1	ARANDELA GROWER	GROWER WASHER	RONDELLE GROWER	
4	48674-63240	1	TUERCA	NUT	ECROU	
5	01107-12703	1	TORNILLO	SCREW	VIS	
6	01107-12903	2	TORNILLO	SCREW	VIS	
7	08321A31123	3	ARANDELA	WASHER	RONDELLE	
8	08310-11123	3	TUERCA	NUT	ECROU	
9	48900A83301	1	BARRA MANDO DIRECC.	STEERING CONTROL ROD	BARRE COMMANDE DIREC	
10	48633-67011	1	TAPON RESPIRADERO	BREATHER PLUG	BOUCHON RESPIRAT.	
11	08314-41123	4	TUERCA	NUT	ECROU	
12	04111-30206	4	PASADOR	PIN	CLAVETTE	
13	48800A70A60	1	BARRA RUEDA	WHEEL ROD	BARRE ROUE	
14	48810A80000	1	ROTULA EXTREMO BARRA	ROD END.BALL JOINT	ROTULE EXTREM.BARRE	
15	00000A00129	1	TUERCA ROSCA DERECHA	RIGHT THREADED NUT	ECROU FILETE DROIT	
16	48843A70A00	1	TUBO CENTRAL	CENTRAL HOSE	TUYAU CENTRAL	
17	00000A00127	1	TUERCA ROSCA IZQUIER	LEFT THREADED NUT	ECROU FILETE GAUCHE	
18	48870A80060	1	ROTULA DOBLE	DOUBLE BALL JOINT	DOUBLE ROTULE	
19	48730A80010	1	AMORTIGUADOR DIRECC.	STEERING DAMPER	AMORTISSEUR DIRECT.	
	48730B80010	1	AMORTIGUADOR DIRECC.	STEERING DAMPER	AMORTISSEUR DIRECT.	ALTERN.
20	41681A58040	2	GOMA AMORTIGUADOR	DAMPER RUBBER	CAOUTCHOUC AMORTISS.	
21	48741-80060	1	TIRANTA AMORTIGUADOR	DAMPER STAY	TIGE AMORTISSEUR	
22	01107-08303	2	TORNILLO	SCREW	VIS	
23	08321B31086	2	ARANDELA	WASHER	RONDELLE	
24	08310-11083	2	TUERCA	NUT	ECROU	
25	01104-12553	1	TORNILLO	SCREW	VIS	
26	08322-21123	1	ARANDELA	WASHER	RONDELLE	
27	08321A31123	1	ARANDELA	WASHER	RONDELLE	
28	08310-11123	1	TUERCA	NUT	ECROU	
29	09160-10074	1	ARANDELA	WASHER	RONDELLE	
30	08321A31103	1	ARANDELA	WASHER	RONDELLE	
31	08310-11103	1	TUERCA	NUT	ECROU	

FIG.57

H-08

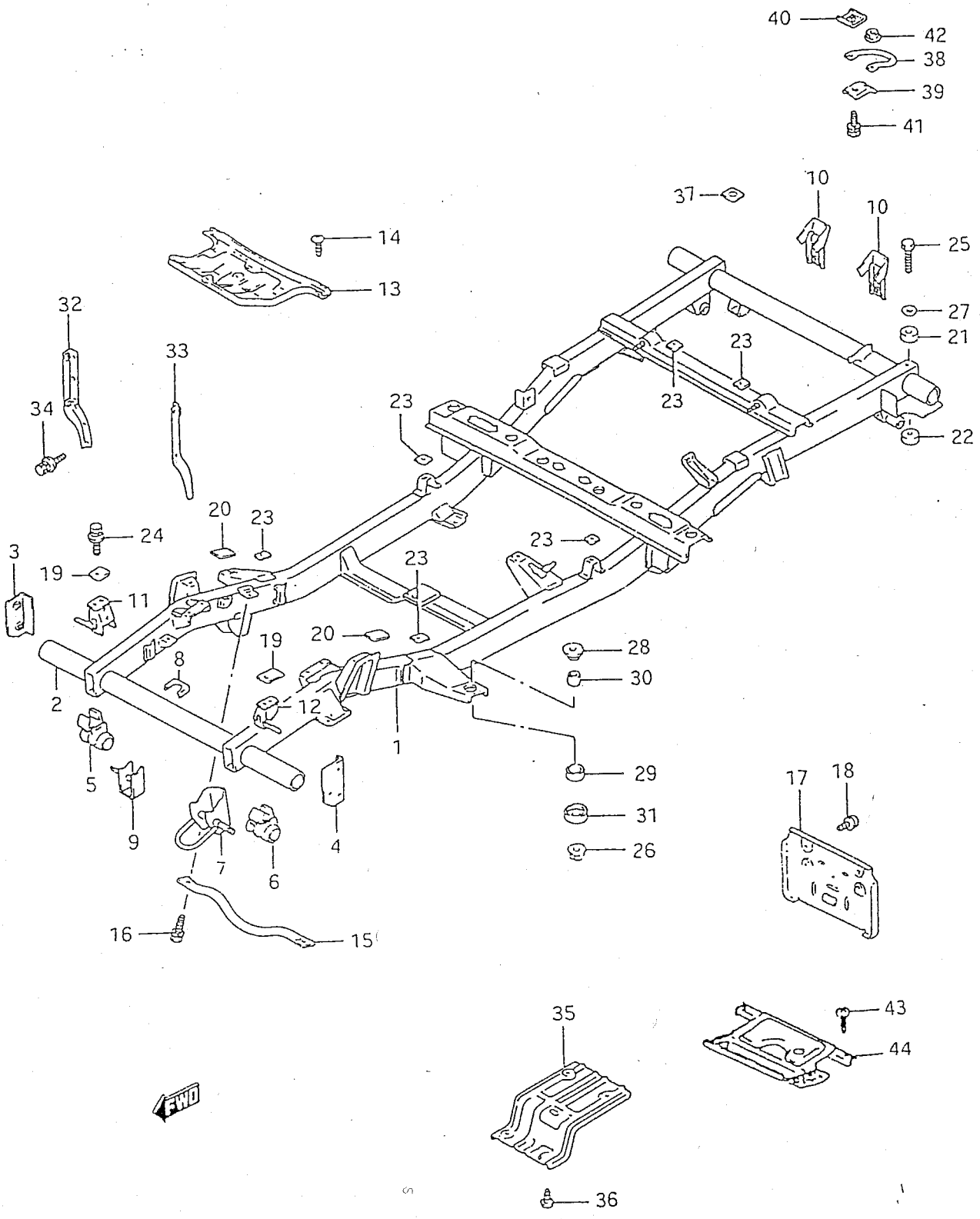

40
42
38
39
41
37
10
10
25
14
13
27
21
32
33
23
23
23
34
22
20
23
24
23
3
19
23
11
20
19
28
8
30
2
12
1
5
29
17
18
9
31
4
7
6
26
16
15
35
43
44
FWD
36

PUBLICACION N:A01116 GRUPO=DIRECCION SUBGRUPO=H-08BASTIDOR
EDICION N: 1 GROUP=STEERING SUBGROUP=H-08CHASSIS
GROUPE=DIRECTION SUBGROUPE=H-08CHASSIS

N.FIG PLATE N.FIG	N.PIEZA PARTNUMBER N.PIECE	CAN QTY OUT	DENOMINACION	DESCRIPTION	DENOMINATION	OBSERVACIONES
1	57000B56C10 VSE	1	CONJUNTO CHASIS	CHASSIS ASSY	ENSEMBLE CHASSIS	H 121456
	57000C56C11	1	CONJUNTO CHASIS	CHASSIS ASSY	ENSEMBLE CHASSIS	D 121457
2	57211-80000	1	TRAVESANO 1	CROSSMEMBER 1	ENTRETOISE 1	
3	57461-80001	1	SOP.PARAGOL.DEL.L/D	FR.BUMPER BRACKET,RH	SUPP.PARECHOC.AV.C/D	
4	57471-80001	1	SOPORTE PARAGOL.L/I	BUMPER BRACKET L/H	SUPPORT PARECHOC C/G	
5	57710-83301	1	SOPORTE BALLESTA,L/D	SPRING BRACKET,R/H	SUPPORT RESSORT,C/D	
6	57720-83301	1	SOPORTE BALLESTA,L/I	SPRING BRACKET,L/H	SUPPORT RESSORT,C/G	
7	57272-80000	1	GANCHO DELANTERO	FRONT HOOK	CROCHET AVANT	
8	57551-83000	1	SOPORTE PANEL MOTOR	ENGINE PANEL BRACKET	SUPPORT PANNEAU MOT.	
9	57680-83001	1	SOPORTE BARRA ESTABI	STABILIZ.BAR BRACKET	SUPPORT BARRE STABIL	
10	57281-80020	2	SOPORTE MATRICULA	LICENSE BRACKET	SUPPORT IMMATRICULAT	
11	57310-83000	1	SOPORTE,L/D	BRACKET,R/H	SUPPORT,C/D	
12	57320-83000	1	SOPORTE,L/I	BRACKET,L/H	SUPPORT,C/G	
13	71411-83000	1	PANEL MOTOR	ENGINE PANEL	PANNEAU MOTEUR	
14	03241-06103	4	TORNILLO	SCREW	VIS	
15	71441-83002	1	PLETINA	STRIP	PLAQUE	
16	01107-10203	2	TORNILLO	SCREW	VIS	
	08321B31103	2	ARANDELA	WASHER	RONDELLE	
17	71481-80031	1	SOPORTE PLACA MATRIC	LICENSE PL.BRACKET	SUPPORT PLAQ.IMMATRI	
18	02112-06123	4	TORNILLO	SCREW	VIS	D 120418
	78410	4	REMACHE POP	POP RIVET	RIVET POP	H 120417
19	71491-80000	2	TAPA N.1	COVER N.1	COUVERCLE N.1	
20	08321A31063	4	ARANDELA MUELLE	SPRING WASHER	RONDELLE ELASTIQUE	D 120418
	71493-83000	2	SUPLEMENTO N.3,T12	SHIM N.3,T12	SUPPLEMENT N.3,T12	
21	71494-80001	2	TAPA N.4	COVER N.4	COUVERCLE N.4	
22	71494-80201	2	TAPA N.4	COVER N.4	COUVERCLE N.4	

FIG.57.1

H-08.1

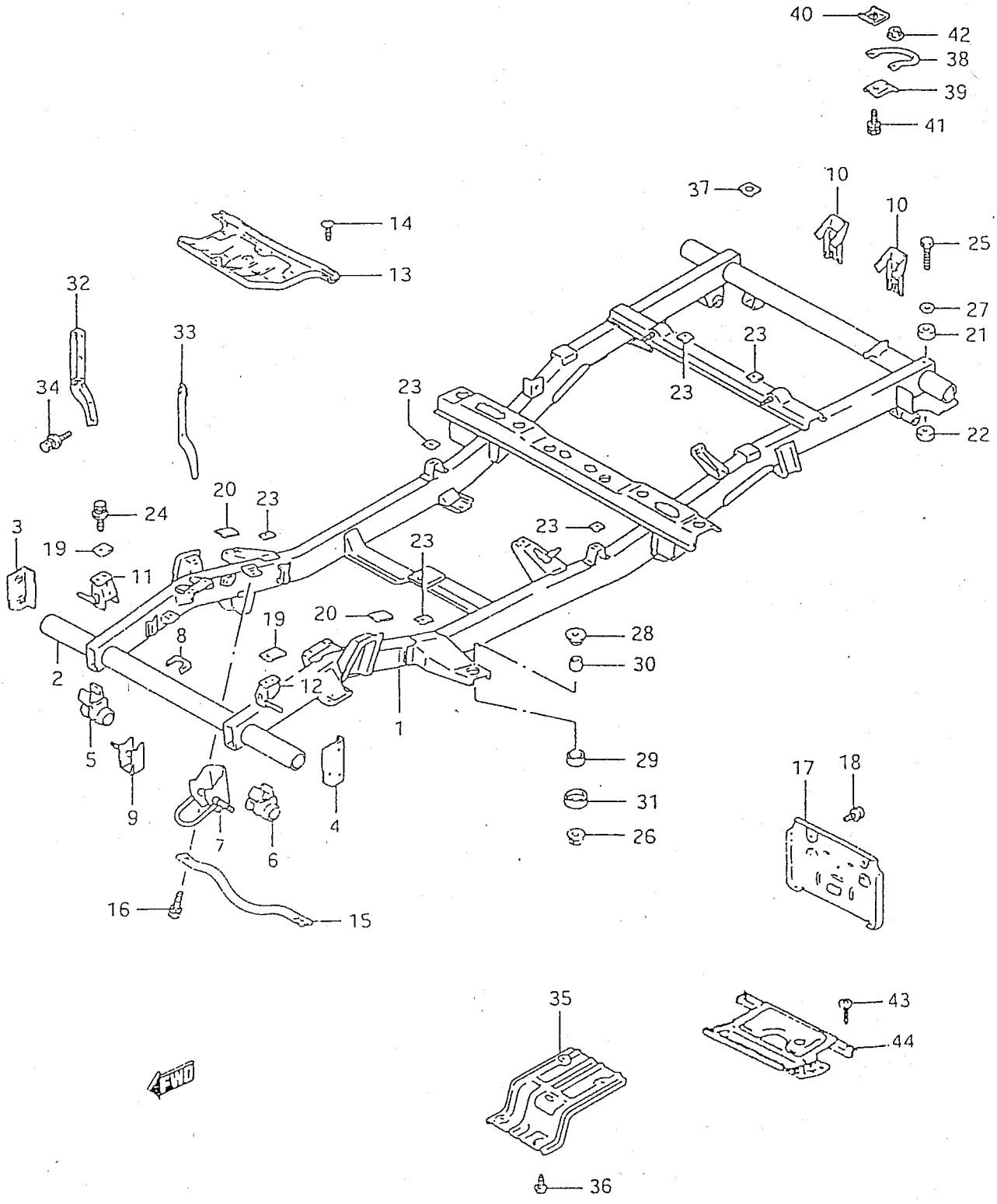

40
42
38
39
41
37
10
10
25
14
13
32
33
27
21
23
23
34
23
22
20
23
24
3
19
11
23
23
19
20
28
8
30
2
12
1
5
29
9
4
31
7
6
26
17
18
16
15
35
43
44
FWD
36

PUBLICACION N:A01116 GRUPO=DIRECCION SUBGRUPO=H-08.1BASTIDOR
EDICION N: 1 GROUP=STEERING SUBGROUP=H-08.1CHASSIS
GROUPE=DIRECTION SUBGROUPE=H-08.1CHASSIS

N.FIG PLATE N.FIG	N.PIEZA PARTNUMBER N.PIECE	CAN QTY OUT	DENOMINACION	DESCRIPTION	DENOMINATION	OBSERVACIONES
23	50140-00000	6	PLACA	PLATE	PLAQUE	
	57321-52001	S-N	SUPLEMENTO N.2,T5	SHIM N.2,T5	SUPPLEMENT N.2,T5	
	71492-80010	4	SUPLEMENTO N.2,T8	SHIM N.2,T8	SUPPLEMENT N.2,T8	
24	01707-10403	2	TORNILLO	SCREW	VIS	
	08321B31103	2	ARANDELA MUELLE	SPRING WASHER	RONDELLE ELASTIQUE	
	09160-10094	2	ARANDELA PLANA	FLAT WASHER	RONDELLE PLATE	
25	09100-10168	2	TORNILLO	SCREW	VIS	
26	09159A10060	6	TUERCA	NUT	ECROU	
27	09160-10094	2	ARANDELA N.5	WASHER N.5	RONDELLE N.5	
28	71610-83000	6	CASQUILLO SUPERIOR	UPPER BUSH	BAGUE SUPERIEURE	
29	71620-83000	6	CASQUILLO INFERIOR	LOWER BUSH	BAGUE INFERIEURE	
30	71631-83000	6	CASQUILLO	BUSH	BAGUE	
31	71632-83010	6	TAPA	COVER	COUVERCLE	
32	71420-80002	1	TIRANTE RADIADOR,L/D	RADIATOR STAY,R/H	TIGE RADIATEUR,C/D	
33	71430A80002	1	TIRANTE RADIADOR,L/I	RADIATOR STAY,L/H	TIGE RADIATEUR,C/G	
34	01104-06166	4	TORNILLO	SCREW	VIS	
	08321A31066	4	ARANDELA MUELLE	SPRING WASHER	RONDELLE ELASTIQUE	
35	75411-83000	1	PANEL PROTECT.CALOR	HEAT PROTECT.PANEL	PANNEAU PROT.CHALEUR	
36	03241-06103	2	TORNILLO	SCREW	VIS	
37	77151-82000	3	ARANDELA PLASTICO	PLASTIC WASHER	RONDELLE PLASTIQUE	
38	71471-80000	1	GANCHO TRASERO	REAR HOOK	CROCHET ARRIERE	
39	71472-80030	2	SOPORTE GANCHO	HOOK BRACKET	SUPPORT CROCHET	
40	71473-80030	2	REFUERZO GANCHO	HOOK REINFORCEMENT	RENFORT CROCHET	
41	01104-12303	2	TORNILLO	SCREW	VIS	
	08321A31123	2	ARANDELA MUELLE	SPRING WASHER	RONDELLE RESSORT	
42	08316-16123	1	TUERCA GANCHO	HOOK NUT	ECROU CROCHET	
43	03141-06123	3	TORNILLO	SCREW	VIS	
	03141-06163	1	TORNILLO	SCREW	VIS	
44	75411-83000	1	PANEL PROTECT.CALOR	HEAT PROTECT.PANEL	PANNEAU PROT.CHALEUR	

GRUPO 08 FRENO

GROUP 08 BRAKE

GROUP 08 FREIN

COMPOSICION.....COMPOSITION.....COMPOSICION

REFERENCIA PARTNUMBER NUM.PIECE	DENOMINACION	DESCRIPTION	DENOMINATION
408058	I-02CILINDR.GIRLING	I-02GIRLING CYLIND.	I-02CYLINDR.GIRLING
408058.1	I-02.1SERVO-GIRLING	I-02.1SERVO-GIRLING	I-02.1SERVO-GIRLING
408059	I-03TUBERIA FRENO	I-03BRAKE PIPE	I-03TUYAUTERIE FREIN
408059.1	I-03.1TUBERIA FRENO	I-03.1BRAKE PIPE	I-03.1TUYAUTER.FREIN
408060	I-04FRENO DEL.C/AMI.	I-04FR.BRAKE,W/ABEST	I-04FREIN AV.A/AMI.
408060.1	I-04.1FRENO DEL.S/AM	I-04.1FR.BRAKE,N/ABE	I-04.1FREIN AV.S/AMI
408061	I-05FRENO TRASERO	I-05REAR BRAKE	I-05FREIN ARRIERE
408062	I-06FRENO DE MANO	I-06HANDBRAKE	I-06FREIN A MAIN
408062.1	I-06.1FRENO DE MANO	I-06.1HANDBRAKE	I-06.1FREIN A MAIN

FIG.58

I-02

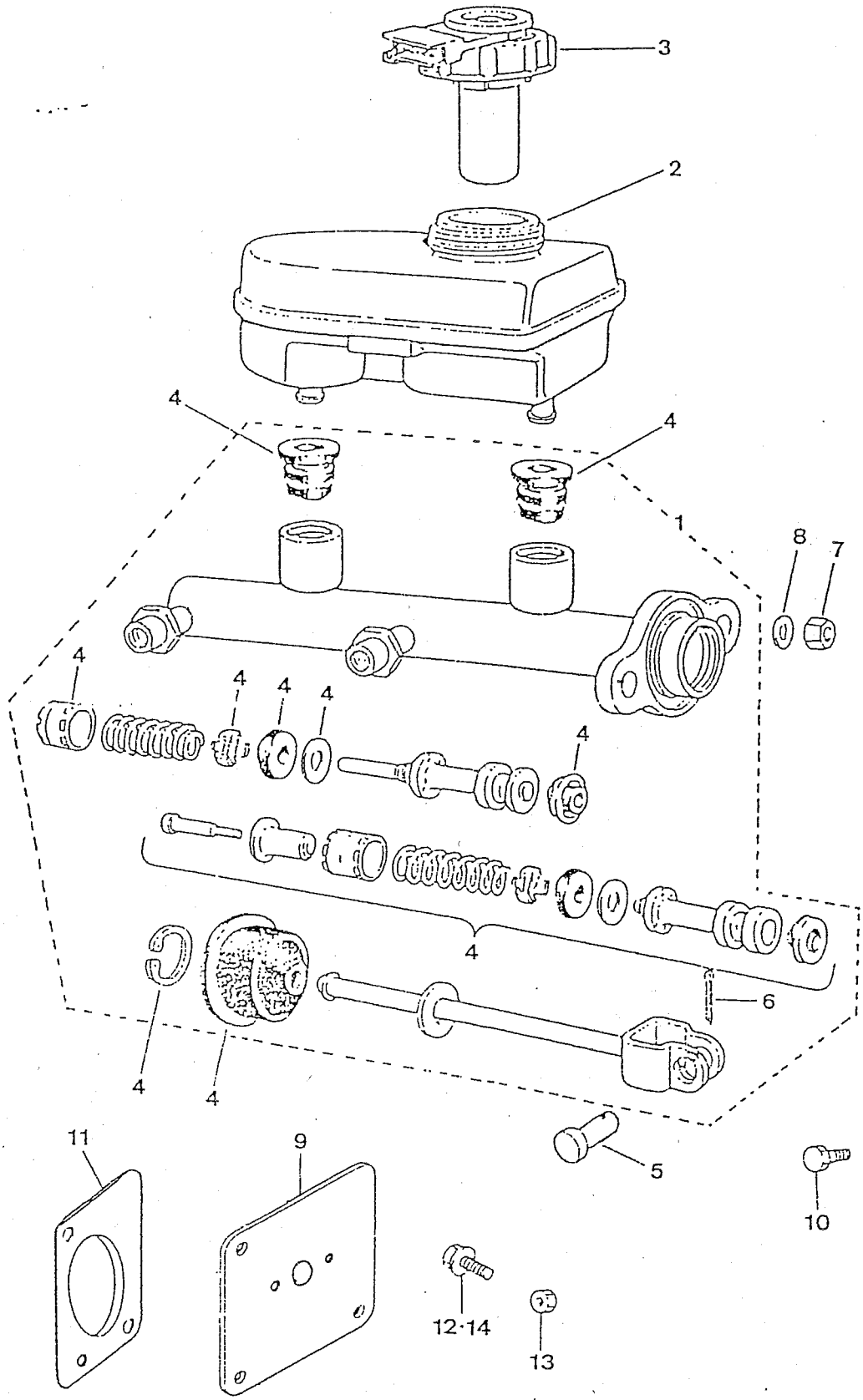

PUBLICACION N:A01116 GRUPO=FRENO SUBGRUPO=I-02CILINDR.GIRLING
EDICION N: 1 GROUP=BRAKE SUBGROUP=I-02GIRLING CYLIND.
GROUPE=FREIN SUBGROUPE=I-02CYLINDR.GIRLING

N.FIG PLATE N.FIG	N.PIEZA PARTNUMBER N.PIECE	CAN QTY OUT	DENOMINACION	DESCRIPTION	DENOMINATION	OBSERVACIONES
1	51100A80060	1	C/CILINDRO PRINCIPAL	MAIN CYLINDER ASSY	ENS.CYLINDRE PRINC.	H 110819
	51100380060	1	C/CILINDRO PRINCIPAL	MAIN CYLINDER ASSY	ENS.CYLINDRE PRINC.	D 110820
2	00000A00152	1	DEPOSITO	TANK	RESERVOIR	
3	00000A00283	1	TAPON NIVEL	LEVEL PLUG	BOUCHON NIVEAU	
4	00000A00151	1	JUEGO REPAR.JUNTAS	REPAIR GASKETS SET	JEU REPARAT.JOINTS	
5	09200-10010	1	PASADOR	PIN	CLAVETTE	
6	04111-25206	1	PASADOR DE ALETAS	WING PIN	CLAVETTE A AILETTES	
7	08321B31086	2	ARANDELA	WASHER	RONDELLE	
8	08310-12086	2	TUERCA	NUT	ECROU	
9	45060-00000	1	PLACA FIJ.CILINDRO	CYLINDER FIX.PLATE	PLAQUE FIX.CYLINDRE	D 110820
10	09119A08023	2	TORNILLO	SCREW	VIS	D 110820
11	45058-00000	1	JUNTA PLACA	PLATE GASKET	JOINT PLAQUE	D 110820
12	01104-08203	3	TORNILLO,FIJ.A PEDAL	SCREW,FIX.TO PEDALS	VIS,FIX.A PEDALES	D 110820
13	08310-12083	3	TUERCA	NUT	ECROU	D 110820
14	08321B31086	3	ARANDELA MUELLE	SPRING WASHER	RONDELLE ELASTIQUE	D 110820

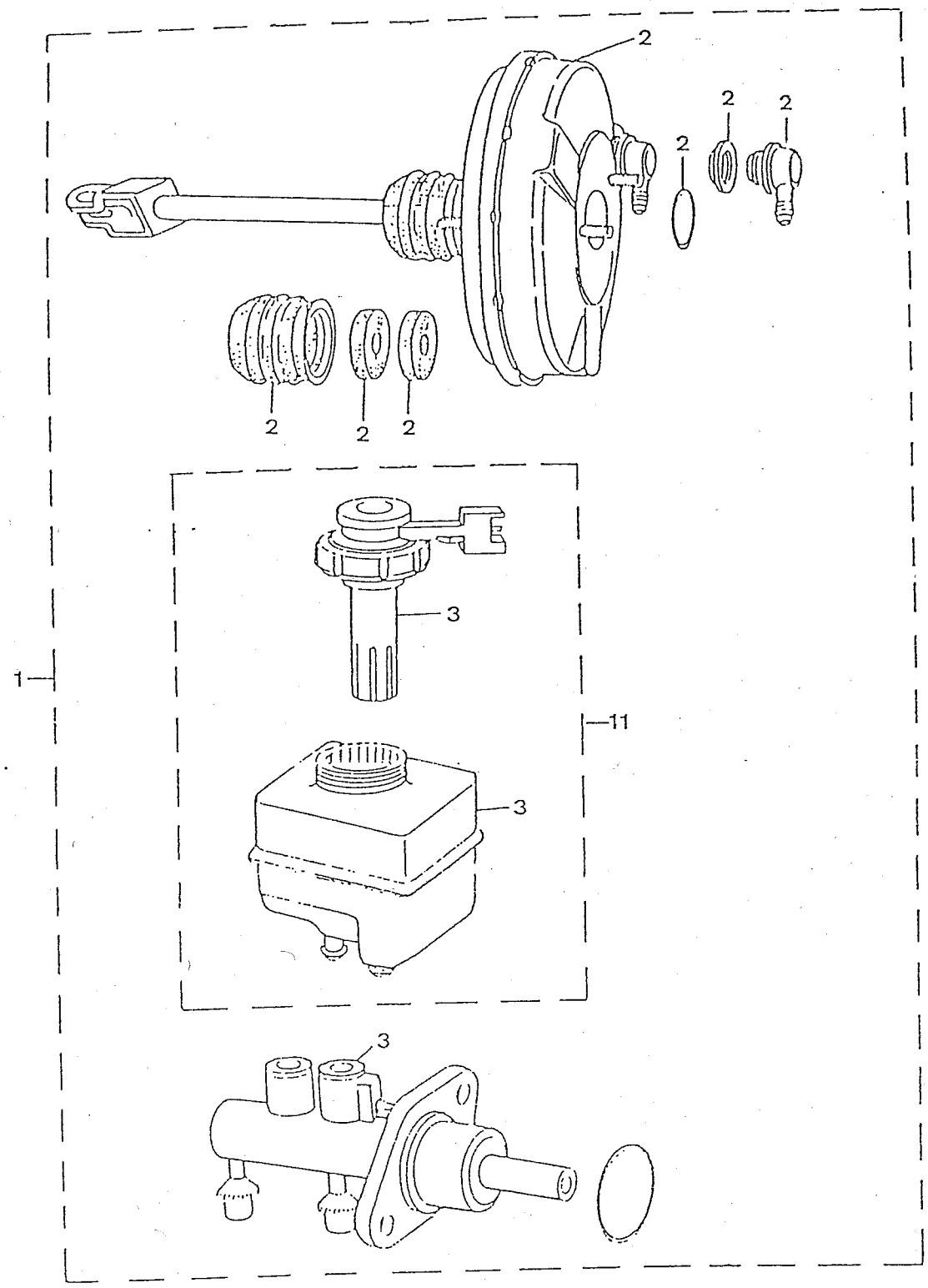
2
2
2
2
2
2
2
2
3
1
11
3
3
10
9
10
5
4
6
7
8

PUBLICACION N:A01116 GRUPO=FRENO SUBGRUPO=I-02.1SERVO-GIRLING
EDICION N: 1 GROUP=BRAKE SUBGROUP=I-02.1SERVO-GIRLING
GROUPE=FREIN SUBGROUPE=I-02.1SERVO-GIRLING

N.FIG PLATE N.FIG	N.PIEZA PARTNUMBER N.PIECE	CAN QTY OUT	DENOMINACION	DESCRIPTION	DENOMINATION	OBSERVACIONES
1	51000G83170	1	SERVO-CILINDRO,D=7	CYLINDER-SERVO,D=7	SERVO-CYLINDRE,D=7	
2	00000A00983	1	SERVO SOLO,D=7	ONLY SERVO,D=7	SERVO SEULEMENT,D=7	
3	00000A00984	1	CILINDRO FRENO	BRAKE CYLINDER	CYLINDRE FREIN	
4	09200-10010	1	PASADOR CILINDRO	CYLINDER PIN	CLAVETTE CYLINDRE	
5	04111-25206	1	PASADOR DE ALETAS	WING PIN	CLAVETTE A AILETTES	
6	51132A82002	1	JUNTA SERVO	SERVO GASKET	JOINT SERVO	
7	08310-12086	4	TUERCA	NUT	ECROU	
8	08321B31086	4	ARANDELA	WASHER	RONDELLE	
9	51010C83010	1	TUBO DE VACIO	VACUUM HOSE	TUYAU DE VIDE	
10	09400A19302	2	ABRAZADERA	CLAMP	COLLIER	
11	00000A00723	1	J/ REPARAC.DEPOSITO	TANK REPAIR SET	JEU REPARAT.RESERV.	

FIG.59

I-03

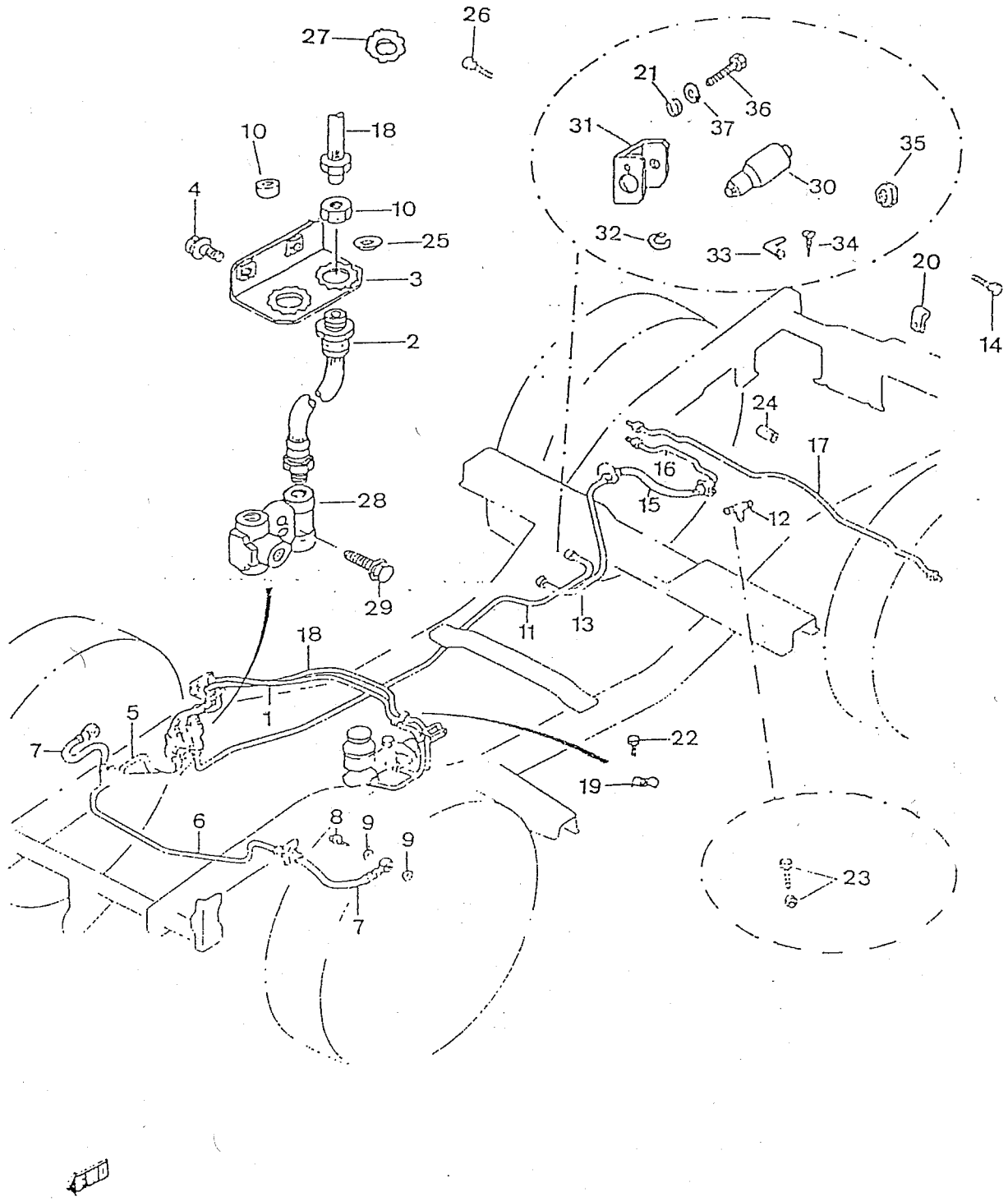

27
26
21
36
37
31
35
30
10
18
4
10
25
32
33
34
20
3
14
2
24
17
16
15
12
28
29
11
13
18
1
5
7
22
19
6
8
9
9
7
23

PUBLICACION N:A01116 GRUPO=FRENO SUBGRUPO=I-03TUBERIA FRENO
EDICION N: 1 GROUP=BRAKE SUBGROUP=I-03BRAKE PIPE
GROUPE=FREIN SUBGROUPE=I-03TUYAUTERIE FREIN

N.FIG PLATE N.FIG	N.PIEZA PARTNUMBER N.PIECE	CAN QTY OUT	DENOMINACION	DESCRIPTION	DENOMINATION	OBSERVACIONES
1	51410A80120	1	TUBO,CILINDRO-LATIGU	HOSE,CYL.-FLEXIBLE	TUYAU,CYL.FLEXIBLE	
	51410E83100	1	TUBO,CILINDRO-LATIGU	HOSE,CYL.-FLEXIBLE	TUYAU,CYL.FLEXIBLE	E18,E29
2	51570A70A30	2	LATIGUILLO CIL.PRINC	MAIN FR.CYL.FLEXIBLE	FLEXIBLE CYL.PRINC.	
	51570B70A30	1	LATIGUILLO CIL.TRAS.	REAR CYL.FLEXIBLE	FLEXIBLE CYL.ARR.	T1
3	51712A83000	1	SOPORTE CILINDRO	CYLINDER BRACKET	SUPPORT CYLINDRE	T1
4	01517-06166	2	TORNILLO	SCREW	VIS	T1
5	51420A70A00	1	TUBO FRENO CRUZ 5T	BRAKE 5-WAY HOSE	TUYAU FREIN 5 VOIES	E18,E29
	51420B80020	1	TUBO FRENO CRUZ 5T	BRAKE 5-WAY HOSE	TUYAU FREIN 5 VOIES	
6	51430A70A00	1	TUBO FRENO CRUZ 5T	BRAKE 5-WAY HOSE	TUYAU FREIN 5 VOIES	E18,E29
	51430B80020	1	TUBO FRENO CRUZ 5T	BRAKE 5-WAY HOSE	TUYAU FREIN 5 VOIES	
7	51540C80150	2	TUBO FLEXIBLE	FLEXIBLE HOSE	TUYAU FLEXIBLE	
8	09360-10025	2	TORNILLO	SCREW	VIS	
9	09161-10009	4	JUNTA	GASKET	JOINT	
10	08310T24106	5	TUERCA M.10	NUT M.10	ECROU M.10	
11	51460A80420	1	TUBO CRUZ 5T VALV.	VALVE 5-WAY HOSE	TUYAU 5 VOIES SOUPAP	H 121456
	51460B80420	1	TUBO CRUZ 5T VALV.	VALVE 5-WAY HOSE	TUYAU 5 VOIES SOUPAP	E18,E29
	51460D80420	1	TUBO CRUZ 5T VALV.	VALVE 5-WAY HOSE	TUYAU 5 VOIES SOUPAP	D 121457
12	51640B80000	1	CRUZ DERIVACION 3T	3-WAY BY-PASS CROSS	'T' DE DERIVATION	
13	51500A80320	1	TUBO VALV.LAT.DEL.	FR.SIDE VALVE HOSE	TUYAU SOUPAP.LAT.AV.	H 121455
	51500B80320	1	TUBO VALV.LAT.DEL.	FR.SIDE VALVE HOSE	TUYAU SOUPAP.LAT.AV.	D 121457
14	00011-00000	3	TORN.FIJ.TUB.EJE TRA	RR AXL.PIP.FIX.SCREW	VIS FIX.TUB.AXE ARR.	
15	51580B80130	1	LATIGUILLO TRASERO	REAR FLEXIBLE HOSE	TUYAU FLEXIBLE ARR.	
16	51470A70A00	1	TUBO FRENO TRAS.L/D	REAR BRAKE HOSE,R/H	TUYAU FREIN ARR.C/D	
17	51480A70A00	1	TUBO FRENO TRAS.L/I	REAR BRAKE HOSE,L/H	TUYAU FREIN ARR.C/G	
18	51520A80120	1	TUBO FRENO TRASERO	REAR BRAKE HOSE	TUYAU FREIN ARRIERE	T1
	51520D80120	1	TUBO FRENO TRASERO	REAR BRAKE HOSE	TUYAU FREIN ARRIERE	T2,T3
	51520E83100	1	TUBO FRENO TRASERO	REAR BRAKE HOSE	TUYAU FREIN ARRIERE	E18,E29

FIG.59.1

I-03.1

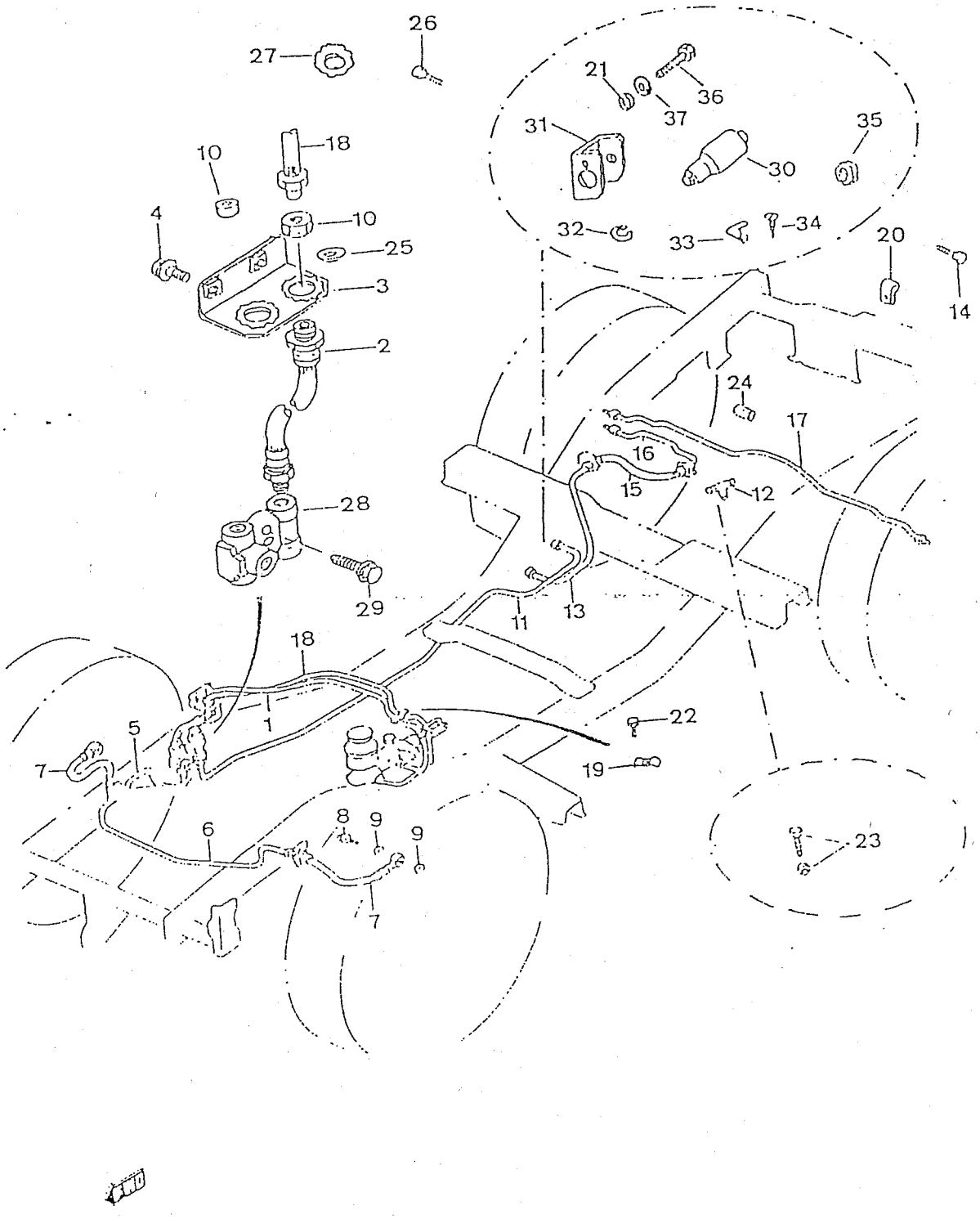
26
27
21
36
37
31
35
10
18
30
4
10
32
33
34
20
25
3
14
2
24
17
16
15
12
28
29
11
13
18
1
22
5
7
19
6
8
9
9
23
7

PUBLICACION N:A01116 GRUPO=FRENO SUBGRUPO=I-03.1TUBERIA FRENO
EDICION N: 1 GROUP=BRAKE SUBGROUP=I-03.1BRAKE PIPE
GROUPE=FREIN SUBGROUPE=I-03.1TUYAUTER.FREIN

N.FIG PLATE N.FIG	N.PIEZA PARTNUMBER N.PIECE	CAN QTY OUT	DENOMINACION	DESCRIPTION	DENOMINATION	OBSERVACIONES
19	09403-07312	3	ABRAZADERA	CLAMP	COLLIER	
20	45025-00000	3	CLIP FIJ.TUB.EJE TRA	RR AXL.PIPE FIX.CLIP	CLIP FIX.TUY.AXE ARR	
21	01107-06126	2	ARANDELA GROWER	GROWER WASHER	RONDELLE GROWER	
	08321A31066	2	ARANDELA GROWER	GROWER WASHER	RONDELLE GROWER	
22	01104-06126	3	TORNILLO	SCREW	VIS	
	08321A31066	3	ARANDELA GROWER	GROWER WASHER	RONDELLE GROWER	
23	01107-06206	1	TORNILLO	SCREW	VIS	
	08310-11066	1	TUERCA	NUT	ECROU	
	08321A31066	1	ARANDELA MUELLE	SPRING WASHER	RONDELLE ELASTIQUE	
24	51755-67000	5	PROTECTOR TUBO	HOSE PROTECTOR	PROTECTEUR TUYAU	
25	45069-00000	2	PROTECTOR	PROTECTOR	PROTECTEUR	E18,E29
26	01104-06166	1	TORNILLO	SCREW	VIS	E18,E29
	08321A31066	1	ARANDELA	WASHER	RONDELLE	E18,E29
27	09163T10001	5	ARANDELA ESTR,10,2	STAR WASHER 10,2	RONDELLE ETOILE 10,2	
28	51640A80000	1	CRUZ DERIVACION 5T	5-WAY BY-PASS CROSS	TUYAU DERIVATION 5V	
29	01517-06356	1	TORNILLO	SCREW	VIS	
30	51930A60A20	1	C/VALVULA INERCIA	INERTIA VALVE ASSY	ENS.SOUPAPE INERTIE	T2,T3
	51950A83120	1	C/VALVULA INERCIA	INERTIA VALVE ASSY	ENS.SOUPAPE INERTIE	T1
31	51951D83400	1	SOPORTE VALVULA	VALVE BRACKET	SUPPORT SOUPAPE	E18,E29
	51951F83400	1	SOPORTE VALVULA	VALVE BRACKET	SUPPORT SOUPAPE	
32	08332T11156	1	ANILLO ELASTICO	SPRING RING	RONDELLE ELASTIQUE	
33	51951B83400	1	FLEJE	STRAP	RESSORT	
34	09124A35001	1	TORNILLO	SCREW	VIS	
35	09148A35001	1	TUERCA	NUT	ECROU	
36	01107-06166	2	TORNILLO	SCREW	VIS	T1
37	08321A31066	2	ARANDELA GROWER	GROWER WASHER	RONDELLE GROWER	T1

FIG.60

I-04

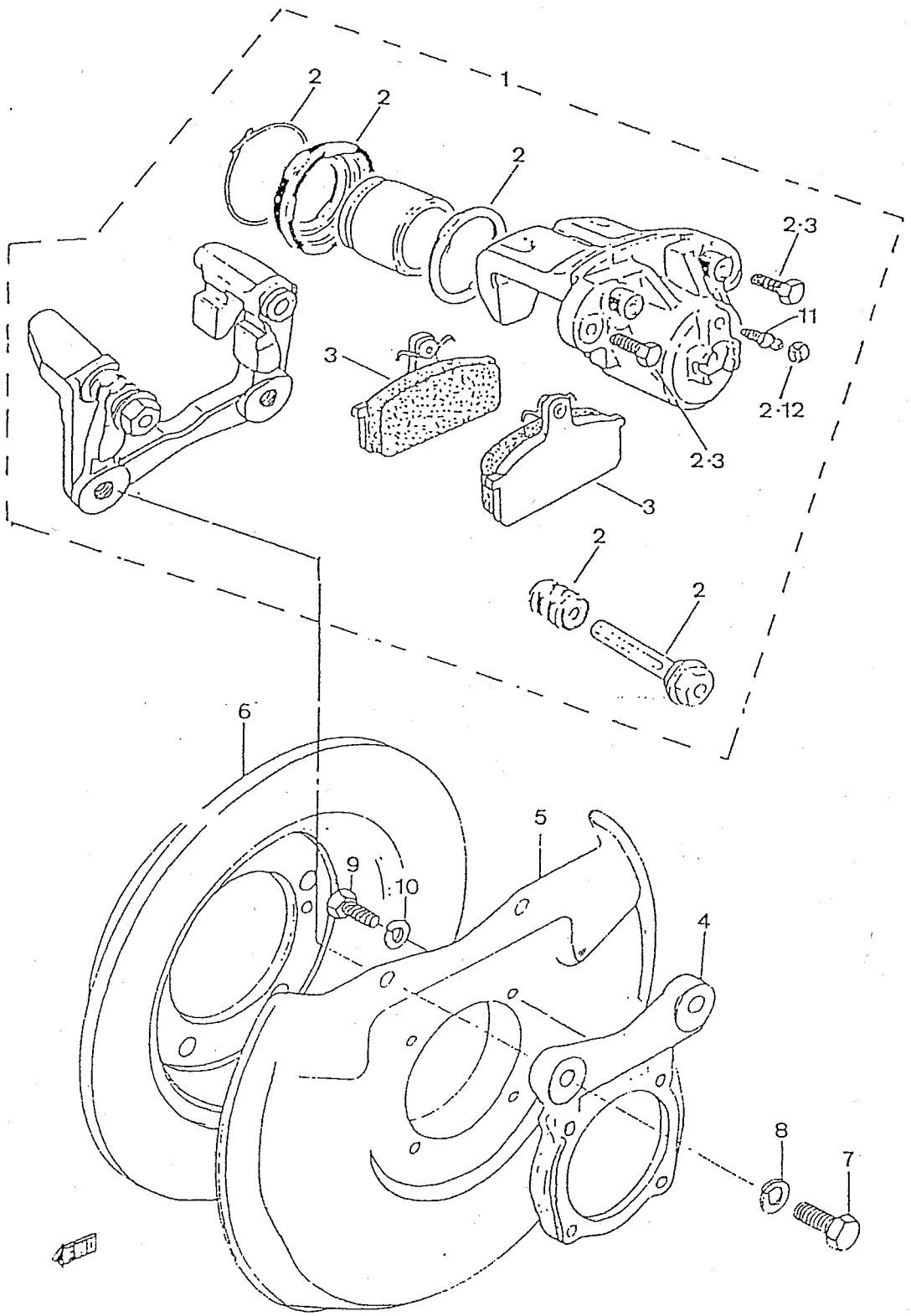

PUBLICACION N:A01116 GRUPO=FRENO SUBGRUPO=I-04FRENO DEL.C/AMI.
EDICION N: 1 GROUP=BRAKE SUBGROUP=I-04FR.BRAKE,W/ABEST
GROUPE=FREIN SUBGROUPE=I-04FREIN AV.A/AMI.

N.FIG PLATE N.FIG	N.PIEZA PARTNUMBER N.PIECE	CAN QTY OUT	DENOMINACION	DESCRIPTION	DENOMINATION	OBSERVACIONES
1	55100B80010	2	C/FRENO DELANTERO	FRONT BRAKE ASSY	ENS.FREIN AVANT	H 107265
2	00000A00153	1	JUEGO REPARACION	REPAIR KIT	JEU REPARATION	
3	00000A00154	1	JUEGO PASTILLAS	PADS SET	JEU PLAQUETTES	H 107265
4	55311-80000	2	SOPORTE FRENO	BRAKE BRACKET	SUPPORT FREIN	
5	55221-80000	2	CUBIERTA DISCO	DISC COVER	COUVERCLE DISQUE	
6	55211-80000	2	DISCO FRENO	BRAKE DISC	DISQUE FREIN	H 107265
7	09100A12111	4	TORNILLO	SCREW	VIS	
8	08321A31123	4	ARANDELA	WASHER	RONDELLE	
9	09100-10023	8	TORNILLO	SCREW	VIS	
10	08321A31103	8	ARANDELA	WASHER	RONDELLE	
11	00000A00236	1	TORNILLO SANGRADOR	BLEEDER SCREW	VIS DE PURGE	
12	00000A00291	1	TAPON	PLUG	BOUCHON	

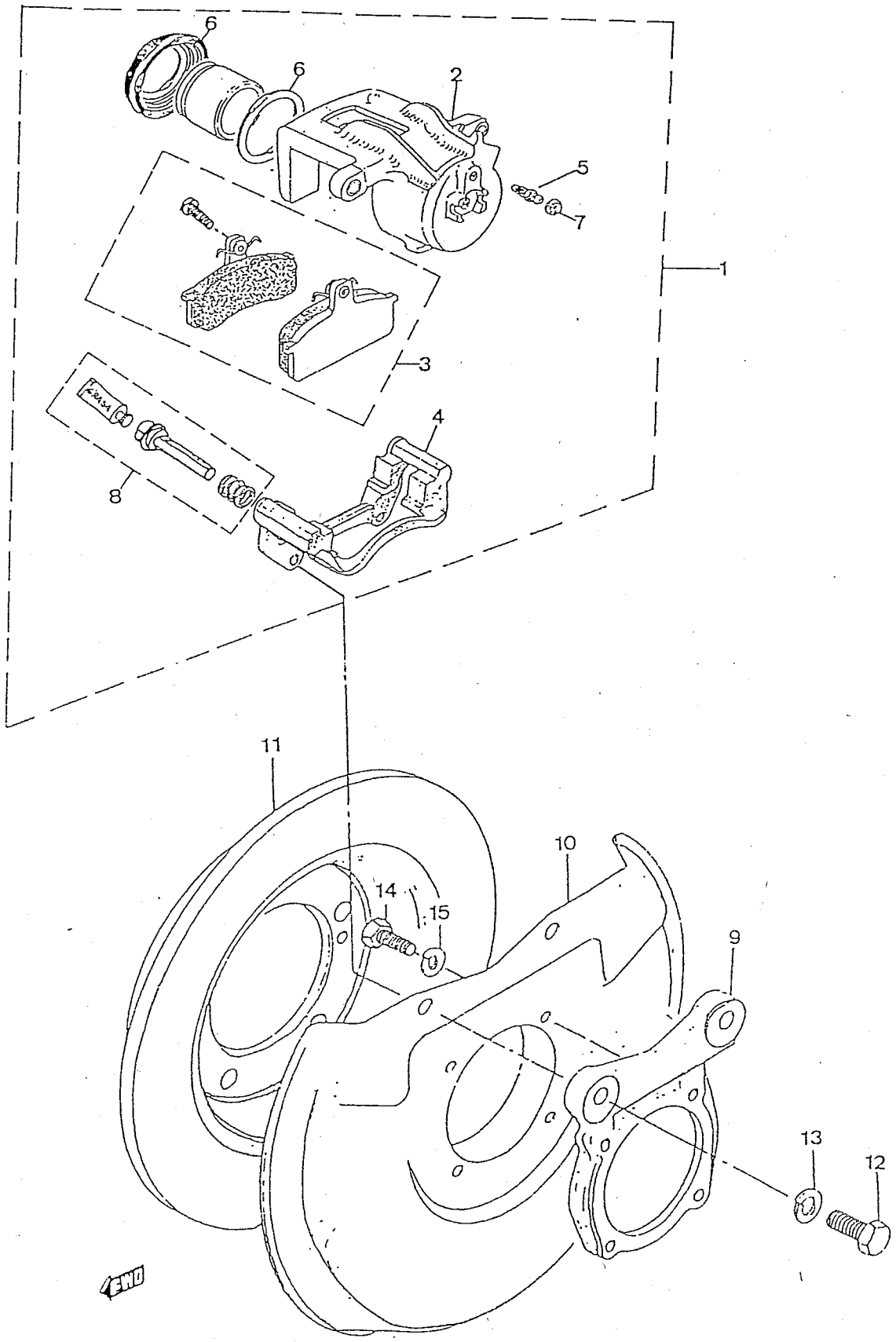
6
6
2
5
7
1
3
4
8
11
10
14
15
9
13
12
FRONT

PUBLICACION N:A01116 GRUPO=FRENO SUBGRUPO=I-04.1FRENO DEL.S/AM
EDICION N: 1 GROUP=BRAKE SUBGROUP=I-04.1FR.BRAKE,N/ABE
GROUPE=FREIN SUBGROUPE=I-04.1FREIN AV.S/AMI

N.FIG PLATE N.FIG	N.PIEZA PARTNUMBER N.PIECE	CAN QTY OUT	DENOMINACION	DESCRIPTION	DENOMINATION	OBSERVACIONES
1	55100C80010	2	C/CALIPER DEL.	FRONT CALIPER ASSY	ENS.CALIPER AVANT	D 107266
2	00000A01038	1	C/CUERPO L/D,L/I	BODY ASSY,R/H,L/H	ENS.CORPS,C/D,C/G	
3	00000A00906	1	JUEGO DE PASTILLAS	PADS KIT	JEU DE PLAQUETTES	D 107266
4	00000A00905	1	C/SOPORTE L/D,L/I	BRACKET ASSY,R/H,L/H	ENS.SUPPORT,C/D,C/G	
5	00000A00236	1	TORNILLO SANGRADOR	BLEEDER SCREW	VIS DE PURGE	
6	00000A00718	1	EQUIPO REPARACION	REPAIR KIT	KIT REPARATION	
7	00000A00291	1	TAPON	PLUG	BOUCHON	
8	00000A00907	1	EQUIPO REPARA.GUIAS	GUIDES REPAIR EQUIP.	EQUIP.REPARA.GUIDES	
9	55311-80000	2	SOPORTE FRENO	BRAKE BRACKET	SUPPORT FREIN	
10	55221-80000	2	CUBIERTA DISCO	DISC COVER	COUVERCLE DISQUE	
11	55211-60A00	2	DISCO FRENO	BRAKE DISC	DISQUE FREIN	D 107266
12	09100A12111	4	TORNILLO	SCREW	VIS	
13	08321A31123	4	ARANDELA	WASHER	RONDELLE	
14	09100-10023	8	TORNILLO	SCREW	VIS	
15	08321A31103	8	ARANDELA	WASHER	RONDELLE	

FIG.61

I-05

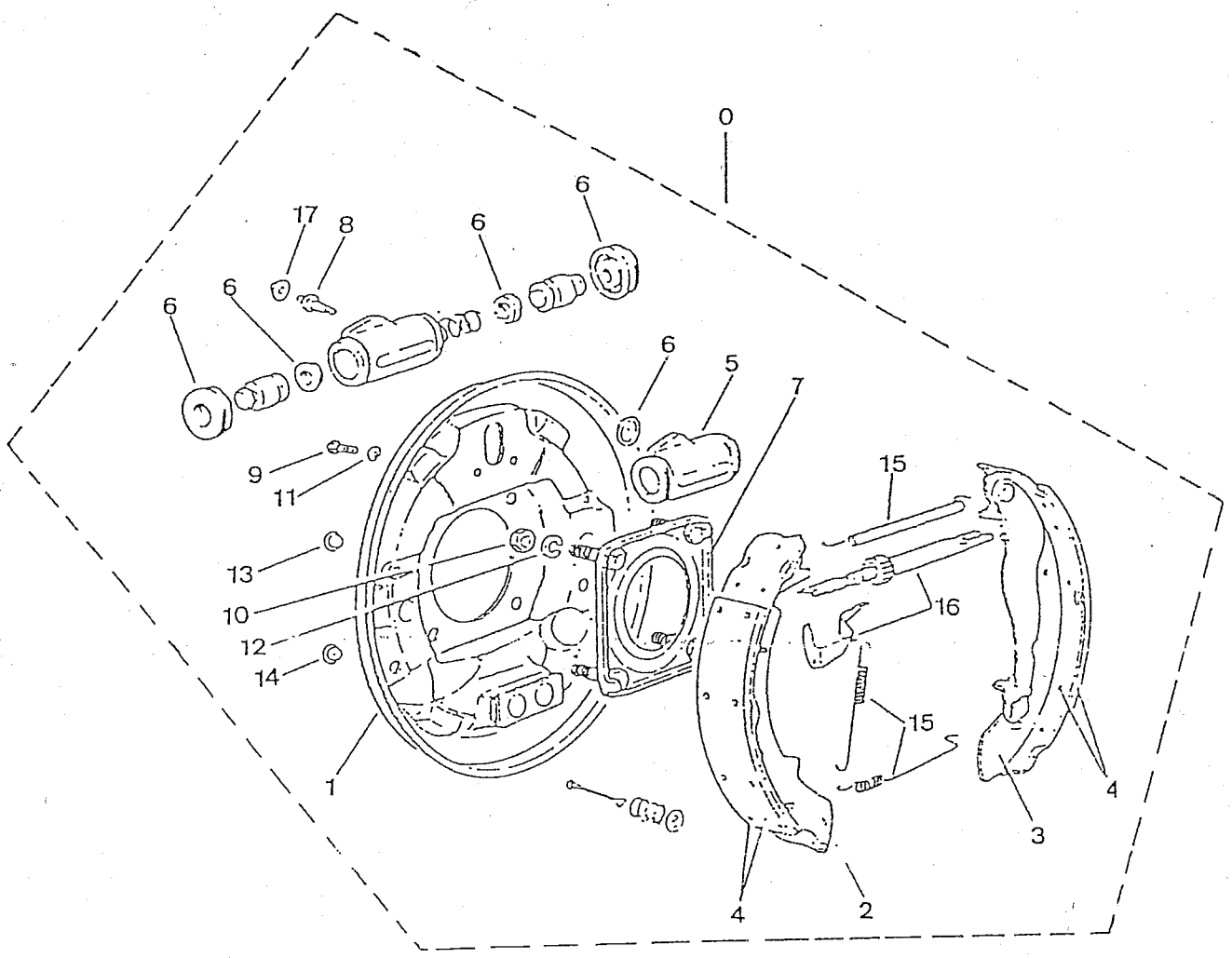

PUBLICACION N:A01116 GRUPO=FRENO SUBGRUPO=I-05FRENO TRASERO
EDICION N: 1 GROUP=BRAKE SUBGROUP=I-05REAR BRAKE
GROUPE=FREIN SUBGROUPE=I-05FREIN ARRIERE

N.FIG PLATE N.FIG	N.PIEZA PARTNUMBER N.PIECE	CAN QTY OUT	DENOMINACION	DESCRIPTION	DENOMINATION	OBSERVACIONES
	53001A70A00	1	C/FRENO,L/D	BRAKE ASSY,R/H	ENS.FREIN,C/D	H 107265 W/ABEST
	53001D70A00	1	C/FRENO,L/D	BRAKE ASSY,R/H	ENS.FREIN,C/D	N/ABESTOS
	53002A70A00	1	C/FRENO,L/I	BRAKE ASSY,L/H	ENS.FREIN,C/G	W/ABESTOS
	53002D70A00	1	C/FRENO,L/I	BRAKE ASSY,L/H	ENS.FREIN,C/G	N/ABESTOS
1	00000A00531	1	PLATO FRENO,L/I	BRAKE PLATE,L/H	PLATEAU FREIN,C/G	
	00000A00532	1	PLATO FRENO,L/D	BRAKE PLATE,R/H	PLATEAU FREIN,C/D	
2	00000A00534	2	ZAPATA COMPLETA,L/I	COMPLETE SHOE,L/H	MACHOIRE COMPLET.C/G	W/ABESTOS
3	00000A00535	2	ZAPATA COMPLETA,L/D	COMPLETE SHOE,R/H	MACHOIRE COMPLET.C/D	W/ABESTOS
4	00000A00157	4	FORROS ZAPATA	SHOE LINING	GARNITURE MACHOIRE	W/ABESTOS
5	00000A00529	2	CILINDRO FRENO RUEDA	WHEEL BRAKE CYLINDER	CYLINDRE FREIN ROUE	
6	00000A00160	1	JUEGO REPAR.CILINDRO	CYLINDER REPAIR SET	JEU REPARAT.CYLINDRE	
7	53001B83040	2	CHAPA RETENCION	RETAINING PLATE	PLAQUE DE RETENUE	
8	00000A00236	1	TORNILLO PURGA	DRAIN SCREW	VIS PURGE	
9	00000A00237	2	TORNILLO	SCREW	VIS	
10	04004-00000	4	TUERCA	NUT	ECROU	
11	00000A00239	2	ARANDELA MUELLE	SPRING WASHER	RONDELLE ELASTIQUE	
12	08321B31086	4	ARANDELA	WASHER	RONDELLE	
13	00000A00234	1	TAPON	PLUG	BOUCHON	
14	00000A00235	1	TAPON	PLUG	BOUCHON	
15	00000A00158	1	JUEGO REPAR.MUELLES	SPRINGS REPAIR SET	JEU REPARAT.RESSORTS	W/ABESTOS
16	00000A00241	1	JUEGO REPA.FRENO,L/I	BRAKE REPAIR SET,L/H	JEU REPAR.FREIN,C/G	W/ABESTOS
	00000A00242	1	JUEGO REPA.FRENO,L/D	BRAKE REPAIR SET,R/H	JEU REPAR.FREIN,C/D	W/ABESTOS
	00000A00900	1	C/AJUSTADOR FREN.L/D	BR.ADJUSTER ASSY,R/H	ENS.AJUSTEUR FRE.C/D	N/ABESTOS
	00000A00901	1	C/AJUSTADOR FREN.L/I	BR.ADJUSTER ASSY,L/H	ENS.AJUSTEUR FRE.C/G	N/ABESTOS
17	00000A00291	1	TAPON SANGRADOR	DRAIN PLUG	BOUCHON DE PURGE	
18	00000A00902	1	JUEGO ZAPATAS	SHOES SET	JEU GARNITURES	N/ABESTOS

FIG.62

I-06

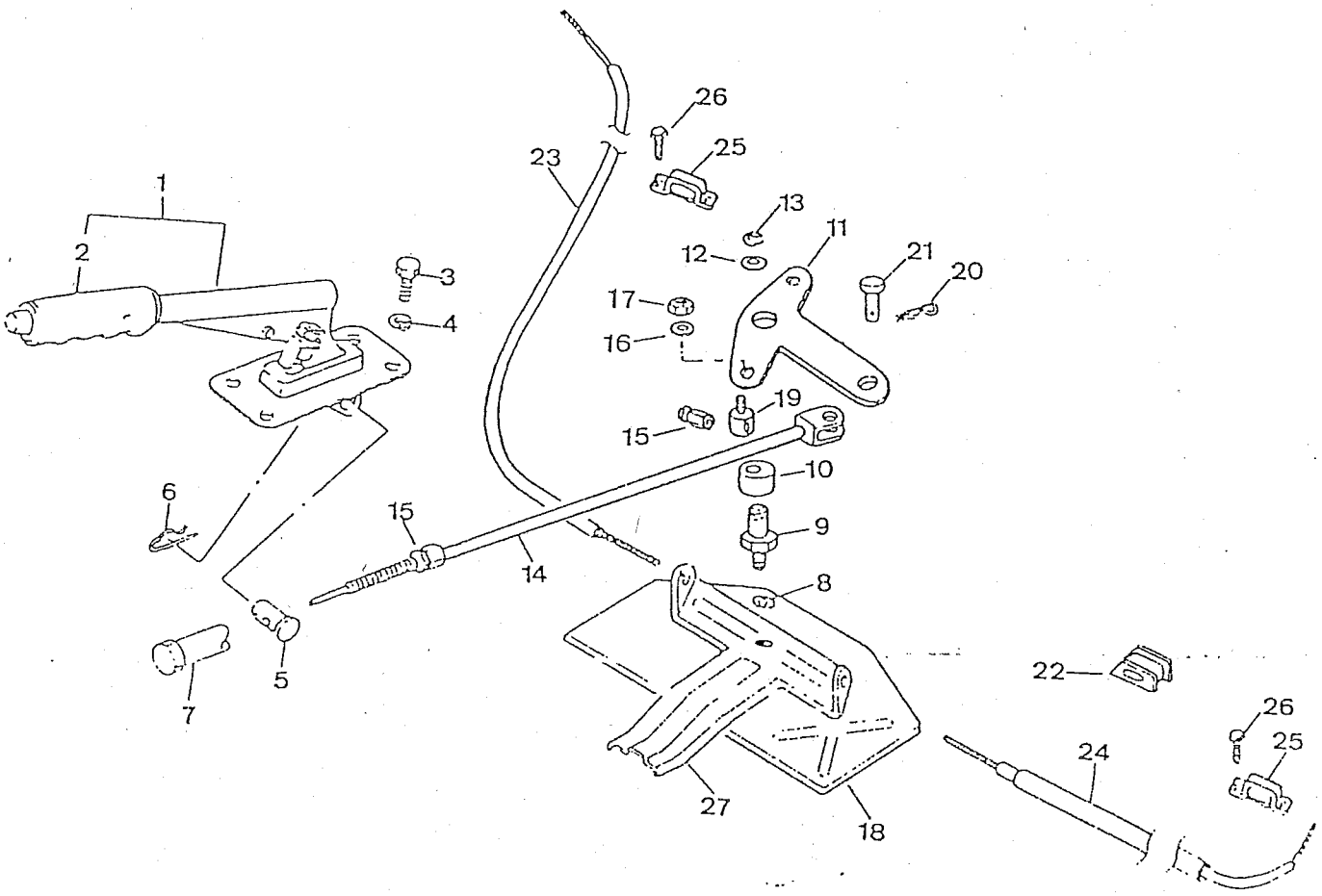
1
2
3
4
5
6
7
8
9
10
11
12
13
14
15
15
16
17
18
19
20
21
22
23
24
25
25
26
26
27

PUBLICACION N:A01116 GRUPO=FRENO SUBGRUPO=I-06FRENO DE MANO
EDICION N: 1 GROUP=BRAKE SUBGROUP=I-06HANDBRAKE
GROUPE=FREIN SUBGROUPE=I-06FREIN A MAIN

N.FIG PLATE N.FIG	N.PIEZA PARTNUMBER N.PIECE	CAN QTY OUT	DENOMINACION	DESCRIPTION	DENOMINATION	OBSERVACIONES
1	54100B83310	1	CONJUNTO PALANCA	LEVER ASSY	ENSEMBLE LEVIER	H 99436
2	54112-82010	1	EMPUNADURA	HANDLE	POIGNEE	
3	01104-06203	4	TORNILLO	SCREW	VIS	
4	08321A31066	4	ARANDELA MUELLE	SPRING WASHER	RONDELLE ELASTIQUE	
5	54161-83300	1	PASADOR	PIN	CLAVETTE	
6	09385-12001	1	CLIP	CLIP	CLIP	
7	54683-83300	1	TUERCA DE REGLAJE	ADJUSTING NUT	ECROU D'AJUSTAGE	
8	09163T10001	1	ARANDELA DENTADA	TOOTHED WASHER	RONDELLE DENTEE	
9	45012-00000	1	EJE ARTICULACION	JOINT SHAFT	AXE ARTICULATION	
10	45011-00000	1	CASQUILLO	BUSH	BAGUE	
11	45008-00000	1	PALANCA INTERMEDIA	INTERMEDIATE LEVER	LEVIER INTERMEDIAIRE	
12	45020-00000	1	ARANDELA	WASHER	RONDELLE	
13	45019-00000	1	CIRCLIP	CIRCLIP	CIRCLIP	
14	45015-00000	1	VARILLA FRENO	BRAKE ROD	TIGE FREIN	
15	45014-00000	3	TUERCA TENSORA	TENSIONING NUT	ECROU TENDEUR	
16	08322-11086	2	ARANDELA PLANA	FLAT WASHER	RONDELLE PLATE	
17	09159A08022	2	TUERCA	NUT	ECROU	
18	45018-00000	1	PROTECTOR PALANCA	LEVER PROTECTOR	PROTECTEUR LEVIER	
19	45013-00000	1	GUIA CABLE	CABLE GUIDE	GUIDE CABLE	
20	04111-25186	1	PASADOR ALETAS	PIN	CLAVETTE	
21	09200A08039	1	BULON	PIN	BOULON	
22	45023-00000	2	SOPORTE CABLE	CABLE BRACKET	SUPPORT CABLE	
23	54640A70A00	1	CABLE, L/D	CABLE, R/H	CABLE, C/D	
24	54660A83310	1	CABLE, L/I	CABLE, L/H	CABLE, C/G	
25	45022-00000	2	BRIDA SOPORTE	BRACKET CLAMP	COLLIER SUPPORT	
26	09132-06006	4	TORNILLO	SCREW	VIS	
27	40046-00000	1	SOPORTE PALANCA	LEVER BRACKET	SUPPORT LEVIER	

FIG.62.1

I-06.1

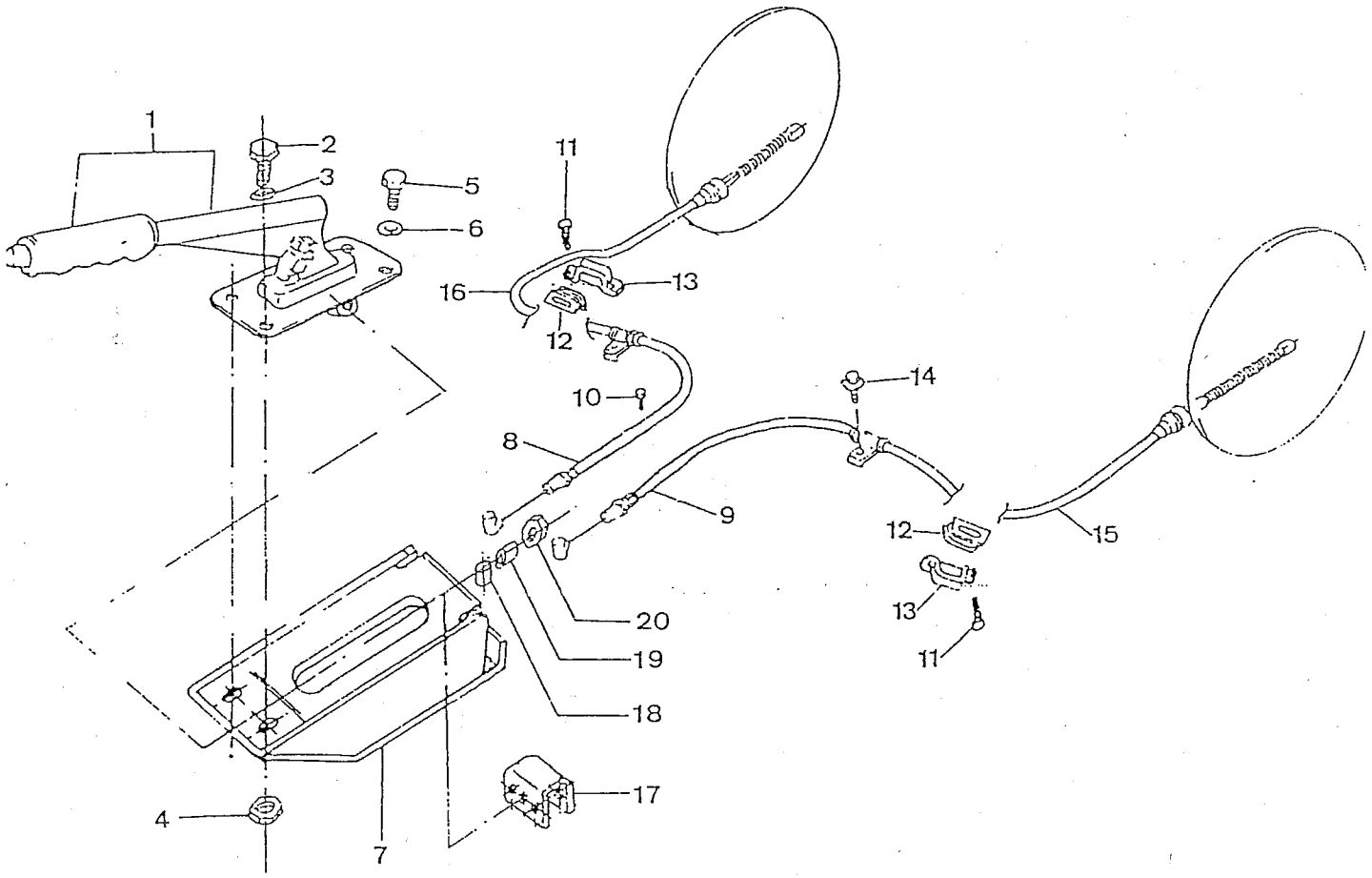

PUBLICACION N:A01116 GRUPO=FRENO SUBGRUPO=I-06.1FRENO DE MANO
EDICION N: 1 GROUP=BRAKE SUBGROUP=I-06.1HANDBRAKE
GROUPE=FREIN SUBGROUPE=I-06.1FREIN A MAIN

N.FIG PLATE N.FIG	N.PIEZA PARTNUMBER N.PIECE	CAN QTY OUT	DENOMINACION	DESCRIPTION	DENOMINATION	OBSERVACIONES
1	54100C83310	1	C/PALANCA FRENO MANO	HANDBRAKE LEVER ASSY	ENS.LEV.FREIN A MAIN	D 99437
2	00016-00000	2	TORNILLO	SCREW	VIS	
3	02007-00000	2	ARANDELA ESTRELLA	STAR WASHER	RONDELLE EN ETOILE	
4	08316-26066	2	TUERCA FIJ.PROTECTOR	PROTECTOR FIXING NUT	ECROU FIXA.PROTECT.	
5	00016-00000	2	TORNILLO	SCREW	VIS	
6	02007-00000	2	ARANDELA ESTRELLA	STAR WASHER	RONDELLE EN ETOILE	
7	45043-00000	1	PROTECTOR ARTICULAC.	JOINT PROTECTOR	PROTECTEUR ARTICULAT	
8	45040-00000	1	C/CABLE, L/D	CABLE ASSY, R/H	ENS.CABLE, C/D	
9	45041-00000	1	C/CABLE, L/I	CABLE ASSY, L/H	ENS.CABLE, C/G	
10	01514-08126	1	TORNILLO	SCREW	VIS	
11	00011-00000	4	TORNILLO	SCREW	VIS	
12	45023-00000	2	SOPORTE CABLE	CABLE BRACKET	SUPPORT CABLE	
13	45022-00000	2	BRIDA SOPORTE	BRACKET CLAMP	COLLIER SUPPORT	
14	03141-06123	1	TORNILLO	SCREW	VIS	
15	45046-00000	1	C/SOPORTE	BRACKET ASSY	ENS.SUPPORT	
16	00009-00000	1	BRIDA CABLEADO,L/I	WIRING CLAMP,L/H	COLLIER FAISCEAU,C/G	
17	54312A60A10	1	EQUILIBRADOR VARILLA	ROD BALANCER	EQUILIBREUR TIGE	
18	54313-60A10	1	PASADOR	PIN	CLAVETTE	
19	08319A21066	1	TUERCA	NUT	ECROU	
20	54315-60A10	1	CASQUILLO	BUSH	BAGUE	

GRUPO 09 CARROCERIA

GROUP 09 BODY

GROUP 09 CARROSSERIE

COMPOSICION.....COMPOSITION.....COMPOSICION

REFERENCIA PARTNUMBER NUM.PIECE	DENOMINACION	DESCRIPTION	DENOMINATION
409063	J-02CARROCERIA DEL.	J-02FRONT BODY	J-02CARROSSERIE AV.
409063.1	J-02.1CARROCERIA DEL	J-02.1FRONT BODY	J-02.1CARROSSERIE AV
409064	J-03REJILLA DEL.	J-03FRONT GRILL	J-03GRILLE AVANT
409065	J-04CAPO	J-04BONNET	J-04CAPOT
409066	J-05PANEL PISO BODY	J-05BODY FLOOR PANEL	J-05PANNEAU ETAG.CAR
409067	J-06PISO TRASERO	J-06REAR FLOOR	J-06ETAGE ARRIERE
409068	J-07PANEL LAT.'J'	J-07SIDE PANEL,'J'	J-07PANNEAU LAT.'J'
409068.1	J-07.1PANEL LAT.'J'	J-07.1SIDE PANEL,'J'	J-07.1PANNEAU LAT.J
409068.2	J-07.2PANEL LAT.'J'	J-07.2SIDE PANEL,'J'	J-07.2PANNEAU LAT.J
409069	J-08PANEL LAT.'V'	J-08SIDE PANEL,'V'	J-08PANNEAU LAT.'V'
409069.1	J-08.1PANEL LAT.'V'	J-08.1SIDE PANEL,'V'	J-08.1PANNEAU LAT.V
409070	J-09TECHO METALICO	J-09METALLIC ROOF	J-09TOIT METALLIQUE
409071	J-10COMPUERTA 'J'	J-10REAR DOOR 'J'	J-10PORTE ARR.'J'
409071.1	J-10.1COMPUERTA 'J'	J-10.1REAR DOOR 'J'	J-10.1PORTE ARR.'J'
409072	J-11PARABRISAS 'J'	J-11WINDSCREEN 'J'	J-11PAREBRISES 'J'
409072.1	J-11.1PARABRISAS 'J'	J-11.1WINDSCREEN 'J'	J-11.1PAREBRISES 'J'
409073	J-12VENTANA LATERAL	J-12SIDE WINDOW	J-12FENETRE LATERALE
409074	J-13PUERTA DELANTERA	J-13FRONT DOOR	J-13PORTE AVANT
409075	J-14CRISTAL PTA DEL.	J-14FRONT DOOR GLASS	J-14VITRE PORTE AV.
409076	J-15CERRAD.PTA DEL.	J-15FRONT DOOR LOCK	J-15SERRURE PTE AV.
409077	J-16PUERTA TRAS.'V'	J-16REAR DOOR 'V'	J-16PORTE ARR.'V'
409078	J-17CERRAD.PTA TRAS.	J-17REAR DOOR LOCK	J-17SERRURE PTE ARR.
409079	J-18SOPORTE RUED.REP	J-18SP.WHEEL BRACKET	J-18SUPPORT ROUE SEC
409080	J-19TECHO FIBRA	J-19POLYESTER ROOF	J-19TOIT FIBRE
409080.1	J-19.1TECHO FIBRA	J-19.1POLYES.ROOF	J-19.1TOIT FIBRE
409080.2	J-19.2TECHO FIBRA	J-19.2POLYES.ROOF	J-19.2TOIT FIBRE
409081	J-20MOLD./BANDA LAT	J-20MOLD./SIDE STRAP	J-20MOUL./BANDE LAT.
409082	J-21CERRADURAS	J-21LOCKS	J-21SERRURES

FIG.63

J-02

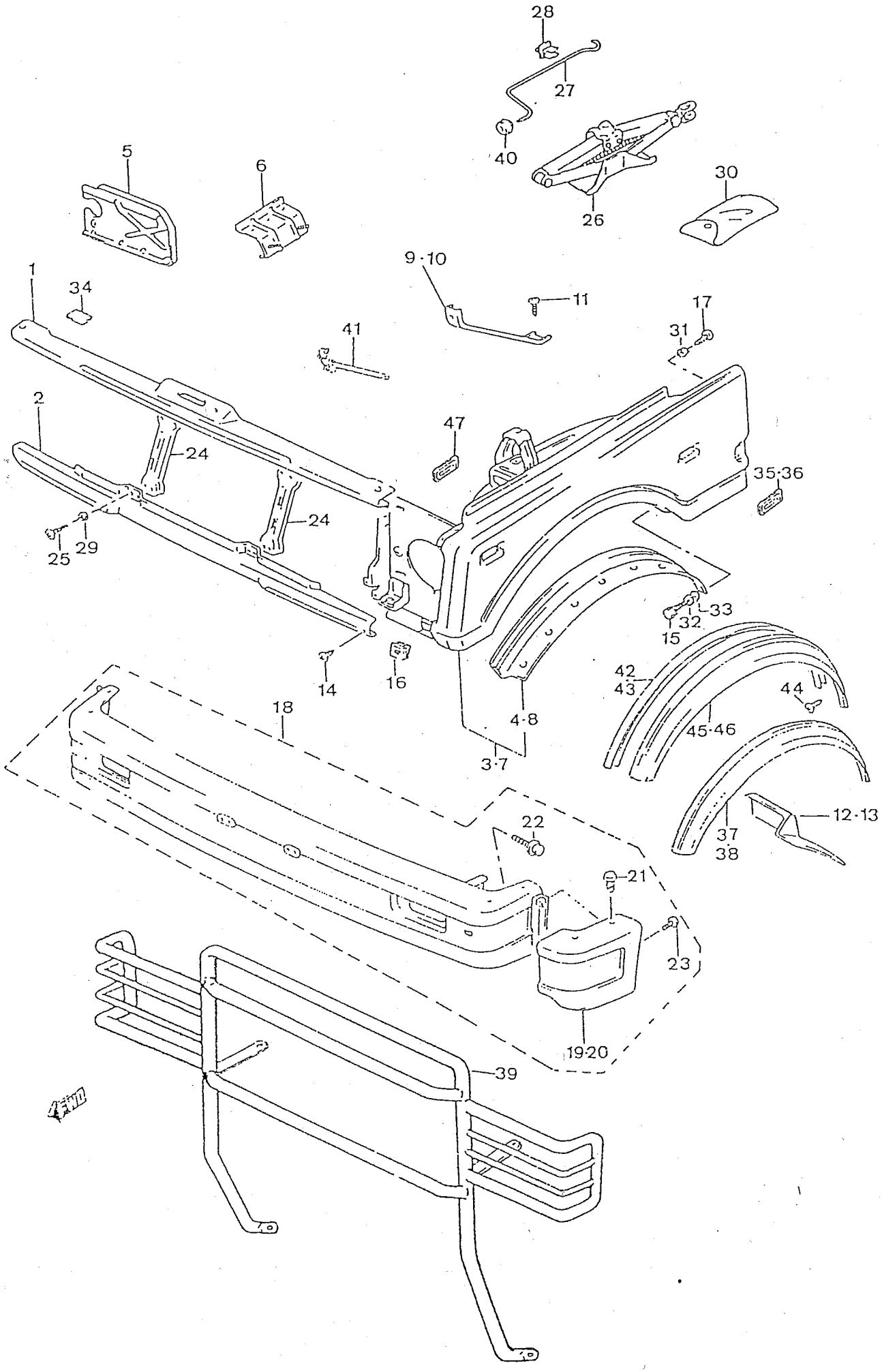
28
27
40
26
5
6
30
1
34
9·10
11
17
31
41
2
47
24
35·36
24
25
29
33
32
15
14
16
42
43
44
4·8
45·46
18
3·7
22
12·13
37
38
21
23
19·20
39

PUBLICACION N:A01116 GRUPO=CARROCERIA SUBGRUPO=J-02CARROCERIA DEL.
EDICION N: 1 GROUP=BODY SUBGROUP=J-02FRONT BODY
GROUPE=CARROSSERIE SUBGROUPE=J-02CARROSSERIE AV.

N.FIG PLATE N.FIG	N.PIEZA PARTNUMBER N.PIECE	CAN QTY OUT	DENOMINACION	DESCRIPTION	DENOMINATION	OBSERVACIONES
1	58100-70A02	1	PANEL FRONTAL	FRONT PANEL	PANNEAU FRONTAL	
2	58200-83002	1	SOPORTE INF.DEL.	FRONT LOWER BRACKET	SUPPORT INF.AVANT	
3	58600A50C40	1	C/ ALETA,L/D	FENDER ASSY,R/H	ENS.AILETTE,C/D	T3
	58600D70A80	1	C/ ALETA,L/D	FENDER ASSY,R/H	ENS.AILETTE,C/D	T1,T2
4	58622-70A10	1	SOPORTE EXTENS.L/D	EXTENS.BRACKET,R/H	SUPPORT EXTENS.C/D	T3
	58622-83002	1	SOPORTE EXTENS.L/D	EXTENS.BRACKET,R/H	SUPPORT EXTENS.C/D	T1,T2
5	58763-83000	1	PLACA DELANTERA	FRONT PLATE	PLAQUE AVANT	
6	58726-83001	1	SOPORTE INF.FILTRO	FILTER LOWER BRACKET	SUPPORT INF.FILTRE	
7	58800A50C40	1	C/ ALETA,L/I	FENDER ASSY,L/H	ENS.AILETTE,C/G	T3
	58800A70A50	1	C/ ALETA,L/I	FENDER ASSY,L/H	ENS.AILETTE,C/G	T1,T2
8	58822-70A10	1	SOPORTE EXTENS.L/I	EXTENS.BRACKET,L/H	SUPPORT EXTENS.C/G	T3
	58822-83002	1	SOPORTE EXTENS.L/I	EXTENS.BRACKET,L/H	SUPPORT EXTENS.C/G	T1,T2
9	58723T83001	1	ALOJAMIENTO FARO,L/D	HEADLIGHT HOUSING,RH	LOGEMENT PHARE,C/D	
10	58923T83001	1	ALOJAMIENTO FARO,L/I	HEADLIGHT HOUSING,LH	LOGEMENT PHARE,C/G	
11	09125-06036	2	TORNILLO	SCREW	VIS	
12	58771-80001	1	RELLENO ALETA,L/D	FENDER BACK-PACK.R/H	GARNISSAGE AILET.C/D	
13	58971-80001	1	RELLENO ALETA,L/I	FENDER BACK-PACK.L/H	GARNISSAGE AILET.C/G	
14	03141-06126	2	TORNILLO	SCREW	VIS	
15	01104-06128	12	TORNILLO	SCREW	VIS	
16	09148A06003	2	TUERCA	NUT	ECROU	
17	09125-06036	18	TORNILLO	SCREW	VIS	
18	71710-83302-5PK	1	PARAGOLPES DELANTERO	FRONT BUMPER	PARECHOCS AVANT	
19	71741-83302	1	ESQUINA PARAGOLP.L/D	BUMPER CORNER,R/H	COIN PARECHOCS,C/D	
20	71742-83302	1	ESQUINA PARAGOLP.L/I	BUMPER CORNER,L/H	COIN PARECHOCS,C/G	
21	09409A07317	4	CLIP	CLIP	CLIP	
22	01514-08123	4	TORNILLO	SCREW	VIS	
23	03141-06123	2	TORNILLO	SCREW	VIS	
24	72411-70A00	2	SOPORTE PANEL DEL.	FR.PANEL BRACKET	SUPPORT PANNEAU AV.	
25	02112-06123	8	TORNILLO	SCREW	VIS	
26	09824A00022	1	C/GATO TIPO TIJERAS	ARTICULAT.JACK ASSY	ENS.CRIC ARTICULE	ALTERN.
	09824B00022	1	C/GATO TIPO TIJERAS	ARTICULAT.JACK ASSY	ENS.CRIC ARTICULE	
	09824C00022	1	C/GATO TIPO TIJERAS	ARTICULAT.JACK ASSY	ENS.CRIC ARTICULE	ALTERN.
27	09824A00017	1	PALANCA GATO	JACK LEVER	LEVIER CRIC	
28	09403-09309	2	ABRAZADERA	CLAMP	COLLIER	
29	08322-21065	8	ARANDELA PLANA	FLAT WASHER	RONDELLE PLATE	
30	09812A00007	1	ALICATES	PLIERS	PINCES	
	09813A00006	1	LLAVE 10X12	WRENCH 10X12	CLE 10X12	
	09813A00009	1	LLAVE 14X17	WRENCH 14X17	CLE 14X17	
	09814A00001	1	CUERPO DESTORNILLAD.	SCREWDRIVER BODY	CORPS TOURNEVIS	
	09814A00007	1	MANGO DESTORNILLAD.	SCREWDRIVER LEVER	MANCHE TOURNEVIS	

FIG.63.1

J-02.1

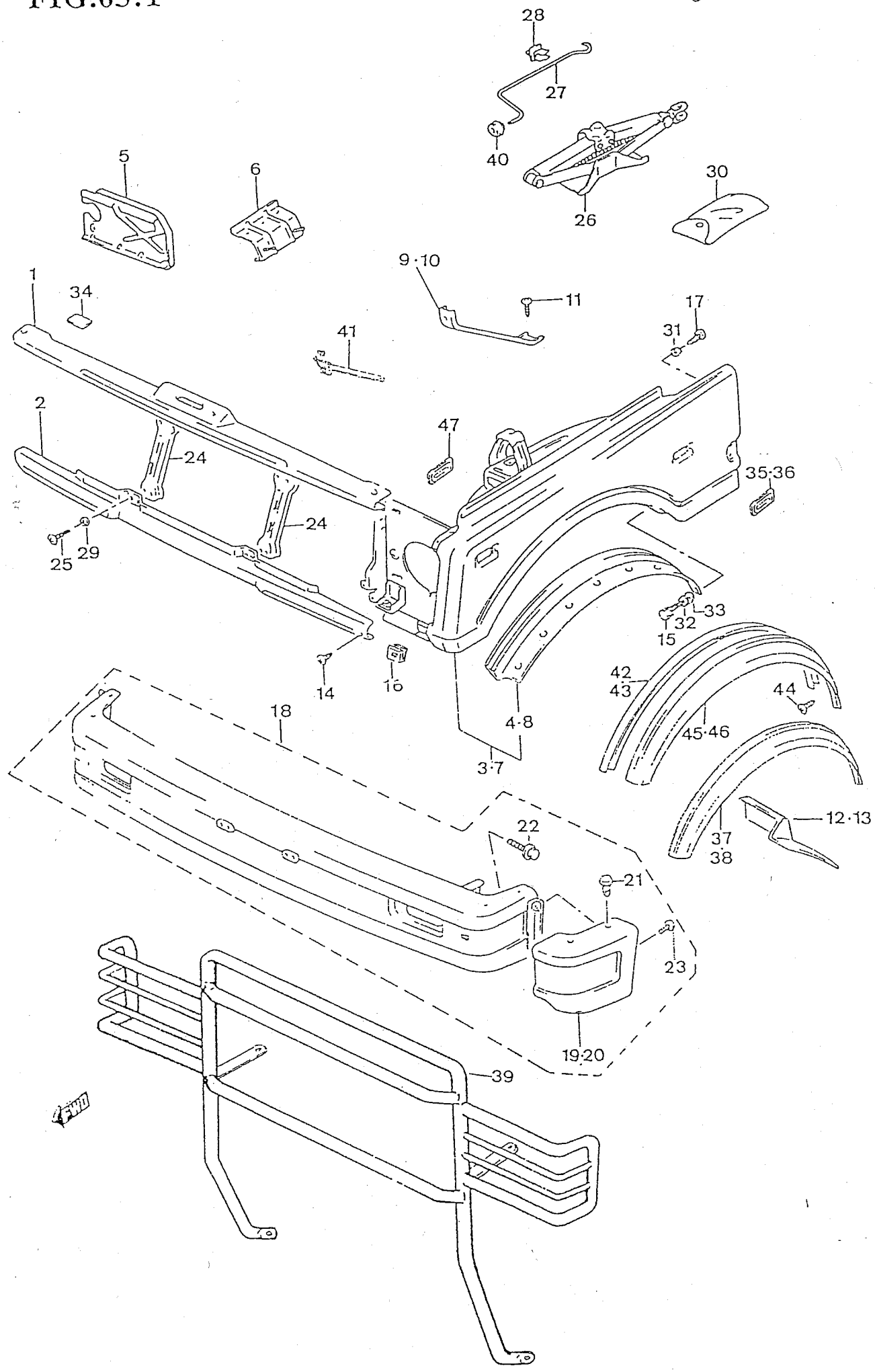
28
27
40
26
5
6
30
9·10
11
1
34
17
31
41
2
47
24
35·36
24
25
29
33
32
15
14
16
42
43
44
18
4·8
45·46
3·7
12·13
37
38
22
21
23
19·20
39
4WD

PUBLICACION N:A01116 GRUPO=CARROCERIA SUBGRUPO=J-02.1CARROCERIA DEL
EDICION N: 1 GROUP=BODY SUBGROUP=J-02.1FRONT BODY
GROUPE=CARROSSERIE SUBGROUPE=J-02.1CARROSSERIE AV

N.FIG / PLATE N.FIG	N.PIEZA / PARTNUMBER / N.PIECE	CAN QTY OUT	DENOMINACION	DESCRIPTION	DENOMINATION	OBSERVACIONES
	09816A00074.	1	LLAVE RUEDAS	WHEELS WRENCH	CLE ROUES	
	09816A00083	1	LLAVE BUJIAS	SPARK PLUG WRENCH	CLE BOUGIES	
	52519-00000	1	CONJ.HERRAMIENTAS	TOOLS ASSY	ENSEMBLE OUTILS	
	52520-00000	1	BOLSA	TOOLS BAG	TROUSSE A OUTILS	
31	09160-06003	2	ARANDELA	WASHER	RONDELLE	
32	08321A31068	12	ARANDELA	WASHER	RONDELLE	
33	09160-06016	12	ARANDELA	WASHER	RONDELLE	
34	72441-80001	2	PELICULA CAPO	BONNET FILM	FILM CAPOT	H 117838
	72441A80001	3	PELICULA CAPO	BONNET FILM	FILM CAPOT	D 117839
35	77830-70A00-0DG	1	C/ANAGR.SAMURAI,L/D	SAMURAI ANAGR.A/,R/H	E/ANAGR.SAMURAI,C/D	
	77830-70A00-19H	1	C/ANAGR.SAMURAI,L/D	SAMURAI ANAGR.A/,R/H	E/ANAGR.SAMURAI,C/D	
	77830-70A00-1FG	1	C/ANAGR.SAMURAI,L/D	SAMURAI ANAGR.A/,R/H	E/ANAGR.SAMURAI,C/D	
	77830-70A00-1FH	1	C/ANAGR.SAMURAI,L/D	SAMURAI ANAGR.A/,R/H	E/ANAGR.SAMURAI,C/D	
	77830-70A00-26U	1	C/ANAGR.SAMURAI,L/D	SAMURAI ANAGR.A/,R/H	E/ANAGR.SAMURAI,C/D	
	77830-70A00-37V	1	C/ANAGR.SAMURAI,L/D	SAMURAI ANAGR.A/,R/H	E/ANAGR.SAMURAI,C/D	
	77830-70A00-38B	1	C/ANAGR.SAMURAI,L/D	SAMURAI ANAGR.A/,R/H	E/ANAGR.SAMURAI,C/D	
36	77840-70A00-0DG	1	C/ANAGR.SAMURAI,L/I	SAMURAI ANAGR.A/,L/H	E/ANAGR.SAMURAI,C/G	
	77840-70A00-19H	1	C/ANAGR.SAMURAI,L/I	SAMURAI ANAGR.A/,L/H	E/ANAGR.SAMURAI,C/G	
	77840-70A00-1FG	1	C/ANAGR.SAMURAI,L/I	SAMURAI ANAGR.A/,L/H	E/ANAGR.SAMURAI,C/G	
	77840-70A00-1FH	1	C/ANAGR.SAMURAI,L/I	SAMURAI ANAGR.A/,L/H	E/ANAGR.SAMURAI,C/G	
	77840-70A00-26U	1	C/ANAGR.SAMURAI,L/I	SAMURAI ANAGR.A/,L/H	E/ANAGR.SAMURAI,C/G	
	77840-70A00-37V	1	C/ANAGR.SAMURAI,L/I	SAMURAI ANAGR.A/,L/H	E/ANAGR.SAMURAI,C/G	
	77840-70A00-38B	1	C/ANAGR.SAMURAI,L/I	SAMURAI ANAGR.A/,L/H	E/ANAGR.SAMURAI,C/G	
37	77131-83022A	1	ALETIN DEL.L/D	FRONT TRIM,R/H	ENJOLIV.AV.C/D	BLUE
	77131-83022B	1	ALETIN DEL.L/D	FRONT TRIM,R/H	ENJOLIV.AV.C/D	WHITE
	77131-83022M	1	ALETIN DEL.L/D	FRONT TRIM,R/H	ENJOLIV.AV.C/D	METALLIC
	77131-83022N	1	ALETIN DEL.L/D	FRONT TRIM,R/H	ENJOLIV.AV.C/D	BLACK
	77131-83022P	1	ALETIN DEL.L/D	FRONT TRIM,R/H	ENJOLIV.AV.C/D	SILVER
	77131-83022R	1	ALETIN DEL.L/D	FRONT TRIM,R/H	ENJOLIV.AV.C/D	RED
38	77141-83022A	1	ALETIN DEL.L/I	FRONT TRIM,L/H	ENJOLIV.AV.C/G	BLUE
	77141-83022B	1	ALETIN DEL.L/I	FRONT TRIM,L/H	ENJOLIV.AV.C/G	WHITE
	77141-83022M	1	ALETIN DEL.L/I	FRONT TRIM,L/H	ENJOLIV.AV.C/G	METALLIC
	77141-83022N	1	ALETIN DEL.L/I	FRONT TRIM,L/H	ENJOLIV.AV.C/G	BLACK
	77141-83022P	1	ALETIN DEL.L/I	FRONT TRIM,L/H	ENJOLIV.AV.C/G	SILVER
	77141-83022R	1	ALETIN DEL.L/I	FRONT TRIM,L/H	ENJOLIV.AV.C/G	RED
39	52771-00000	1	DEFENSA DELANTERA	FRONT PROTECTOR	PROTECTEUR AVANT	'PLAYA'
40	50688-00000	1	ANTIVIBRATORIO	ANTIVIBRATION	ANTIVIBRATION	
41	09407A12402	2	ABRAZADERA	CLAMP	COLLIER	
42	77130-70A00-5WA	1	C/PERFIL CIERRE,L/D	LOCK PROFILE A/,R/H	E/PROFILE FERMET.C/D	T3
43	77140-70A00-5WA	1	C/PERFIL CIERRE,L/I	LOCK PROFILE A/,L/H	E/PROFILE FERMET.C/G	T3
44	09139-06058	6	TORNILLO FIJ.EXTENS.	EXTENS.FIX.SCREW	VIS FIXA.EXTENSION	T3
45	58630-70A00	1	C/ALETIN DEL.L/D	FRONT WING ASSY,R/H	ENS.AILE AVANT,C/D	T3
46	58830-70A00	1	C/ALETIN DEL.L/I	FRONT WING ASSY,L/H	ENS.AILE AVANT,C/G	T3
47	51951-00000	2	ANAGRAMA "MIL"	"MIL" ANAGRAM	ANAGRAMME "MIL"	

FIG.64

J-03

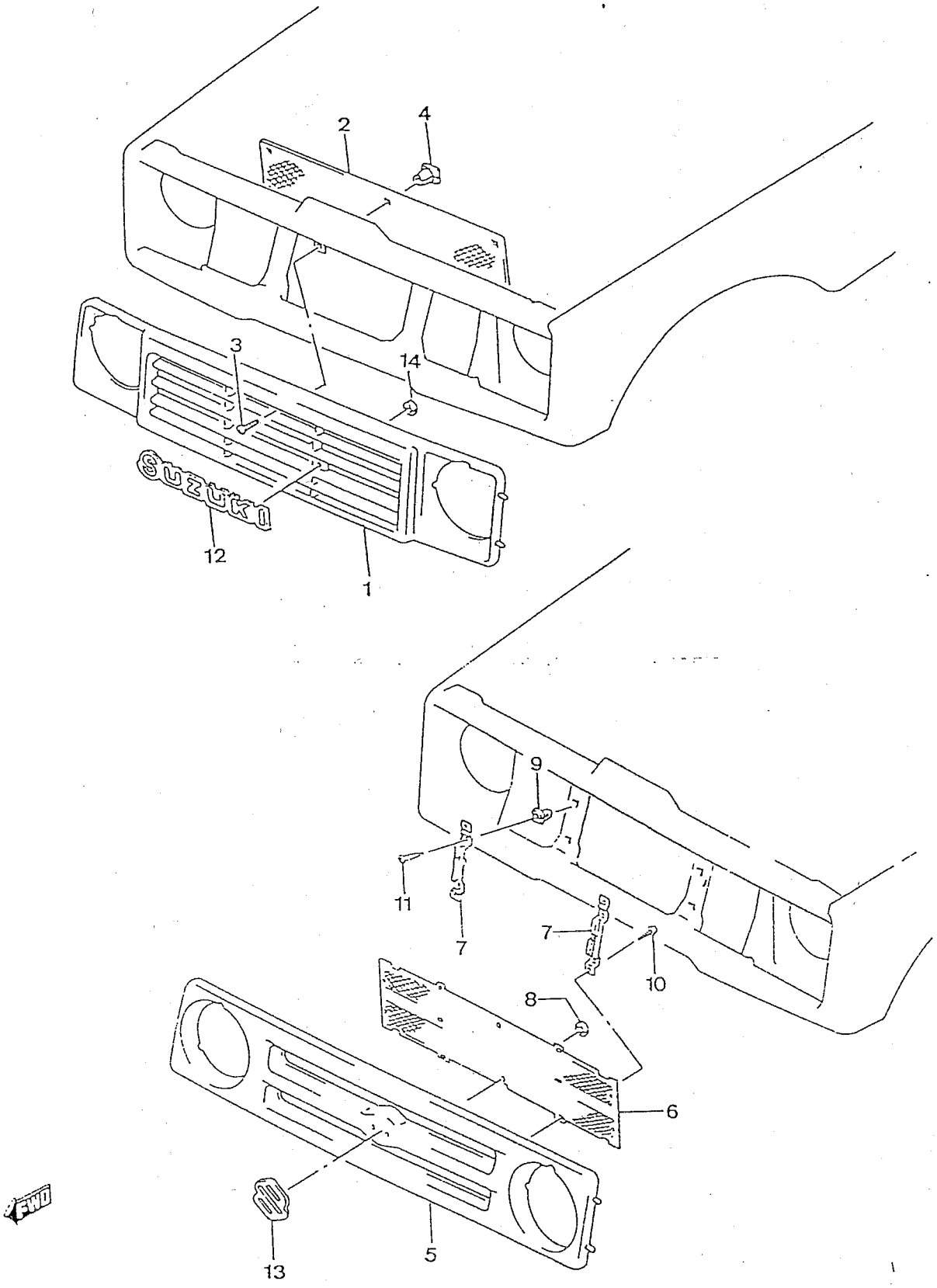

PUBLICACION N:A01116 GRUPO=CARROCERIA SUBGRUPO=J-03REJILLA DEL.
EDICION N: 1 GROUP=BODY SUBGROUP=J-03FRONT GRILL
GROUPE=CARROSSERIE SUBGROUPE=J-03GRILLE AVANT

N.FIG PLATE N.FIG	N.PIEZA PARTNUMBER N.PIECE	CAN QTY OUT	DENOMINACION	DESCRIPTION	DENOMINATION	OBSERVACIONES
1	72111A70A00A	1	REJILLA DEL.AZUL	BLUE FRONT GRILL	GRILLE AVANT BLEUE	H 95126
	72111A70A00B	1	REJILLA DEL.BLANCA	WHITE FRONT GRILL	GRILLE AVANT BLANCHE	H 95126
	72111A70A00M	1	REJILLA DEL.METALICA	METALLIC FRONT GRILL	GRILLE AVANT METALL.	H 95126
	72111A70A00N	1	REJILLA DEL.NEGRA	BLACK FRONT GRILL	GRILLE AVANT NOIRE	H 95126
	72111A70A00P	1	REJILLA DEL.PLATA	SILVER FRONT GRILL	GRILLE AV.ARGENTEE	H 95126
	72111A70A00R	1	REJILLA DEL.ROJA	RED FRONT GRILL	GRILLE AVANT ROUGE	H 95126
	72111B70A00	1	REJILLA DELANTERA	FRONT GRILL	GRILLE AVANT	D 95127-T1
2	72115-70A02	1	MOSQUITERA REJILLA	GRILL NET	MOUSTIQUAIRE GRILLE	T1
3	03242A05163	5	TORNILLO FIJACION	FIXING SCREW	VIS DE FIXATION	T1
4	09148-05022	5	TUERCA	NUT	ECROU	T1
5	72111A57C10-38B	1	REJILLA DELANTERA	FRONT GRILL	GRILLE AVANT	T2,T3
6	72115-57C10	1	MOSQUITERA REJILLA	GRILL NET	MOUSTIQUAIRE GRILLE	T2,T3
7	72116-57C10	2	REFUERZO	REINFORCEMENT	RENFORT	T2,T3
8	09148-04010	1	TUERCA FIJ.ANAGRAMA	ANAGRAM FAST.NUT	ECROU FIX.ANAGRAMME	T2
	09148A04010	3	TUERCA FIJ.MOSQUIT.	NET FASTENING NUT	ECROU FIX.MOUSTIQU.	T3
9	09148-04033	5	TUERCA	NUT	ECROU	T2,T3
10	03541-04103	6	TORNILLO REFUERZO	REINFORCEMENT SCREW	VIS RENFORT	T2,T3
11	03542-04167	5	TORNILLO FIJACION	FASTENING SCREW	VIS FIXATION	
12	50376-00000	1	ANAGRAMA SANTANA	SANTANA ANAGRAM	ANAGRAMME SANTANA	
	77811C83000	1	ANAGRAMA SUZUKI	SUZUKI ANAGRAM	ANAGRAMME SUZUKI	T1
13	77811-50C00-D56	1	ANAGRAMA SUZUKI	SUZUKI ANAGRAM	ANAGRAMME SUZUKI	T2,T3
14	09148A03003	2	CLIP FIJAC.ANAGRAMA	ANAGRAM FIXING CLIP	CLIP FIXA.ANAGRAMME	T1

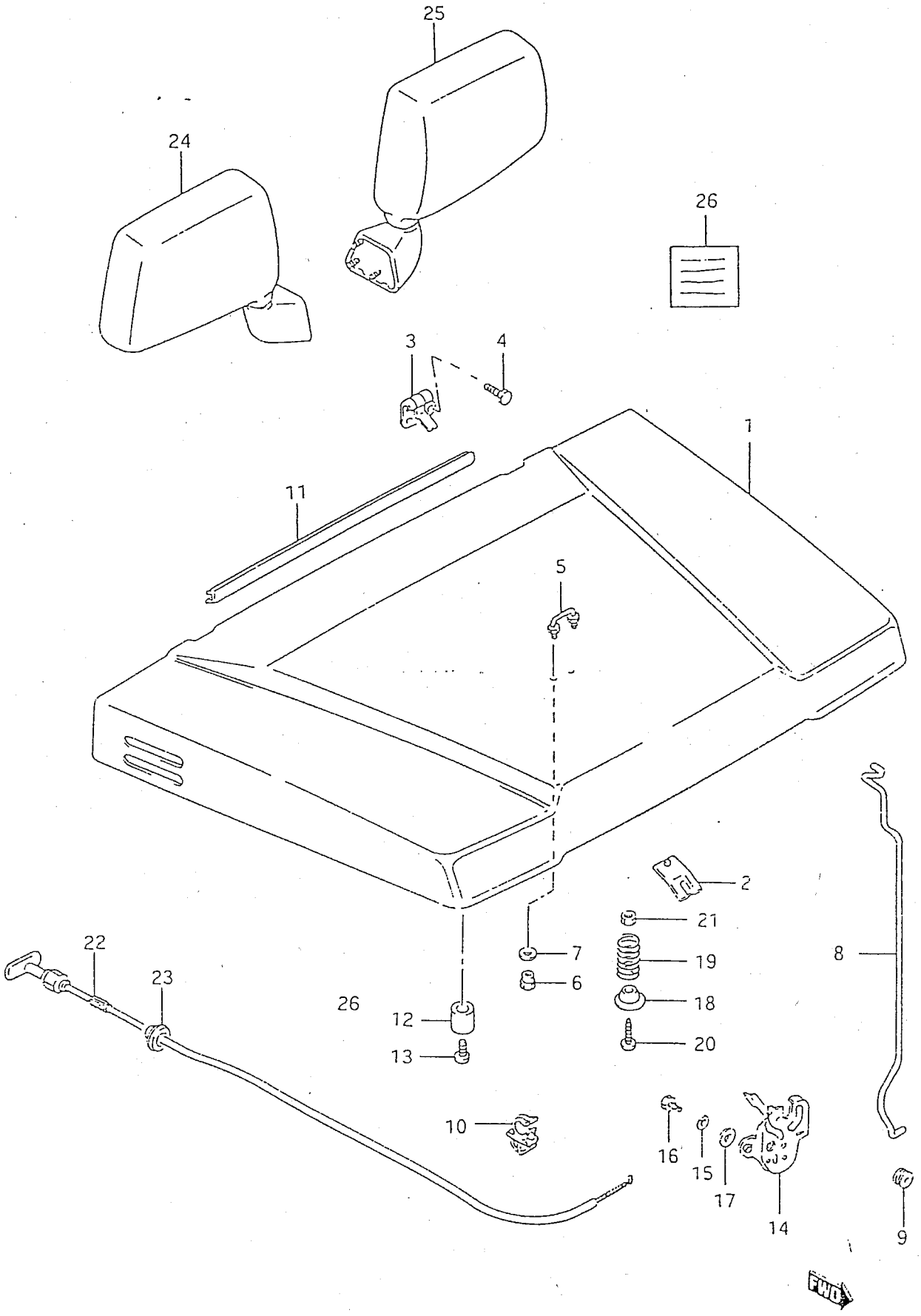
25
24
26
3
4
1
11
5
2
21
19
18
20
7
6
8
22
23
26
12
13
10
16
15
17
14
9
FWD

PUBLICACION N:A01116 GRUPO=CARROCERIA SUBGRUPO=J-04CAPO
EDICION N: 1 GROUP=BODY SUBGROUP=J-04BONNET
GROUPE=CARROSSERIE SUBGROUPE=J-04CAPOT

N.FIG PLATE N.FIG	N.PIEZA PARTNUMBER N.PIECE	CAN QTY OUT	DENOMINACION	DESCRIPTION	DENOMINATION	OBSERVACIONES
1	58300-50C01	1	CAPO DELANTERO	FRONT BONNET	CAPOT AVANT	(T2,T3-'J')
	58300-51C01	1	CAPO DELANTERO	FRONT BONNET	CAPOT AVANT	(T2,T3-'V')
	58300-70A01	1	CAPO DELANTERO	FRONT BONNET	CAPOT AVANT	(T1-'J')
	58300-73A21	1	CAPO DELANTERO	FRONT BONNET	CAPOT AVANT	(T1-'V')
2	58370-80000	1	GANCHO CIERRE CAPO	BONNET LOCKING HOOK	CROCHET FERM.CAPOT	
3	58410-80010	2	BISAGRA CAPO	BONNET HINGE	CHARNIERE CAPOT	
4	01104-06168	4	TORNILLO	SCREW	VIS	
	08321A31068	4	ARANDELA GROWER	GROWER WASHER	RONDELLE GROWER	
	09160-06019	4	ARANDELA PLANA	FLAT WASHER	RONDELLE PLATE	
5	58381A80000	1	GANCHO CAPO,'J'	BONNET HOOK,'J'	CROCHET CAPOT,'J'	
6	08310-11066	2	TUERCA	NUT	ECROU	
7	58382A80000	2	ARANDELA TOPE	STOP WASHER	RONDELLE D'ARRET	
8	72442-70A01	1	VARILLA CAPO	BONNET ROD	TIGE CAPOT	T2,T3
	72442-83002	1	VARILLA CAPO	BONNET ROD	TIGE CAPOT	
9	09308-08001	1	ARANDELA DE GOMA	RUBBER WASHER	RONDELLE CAOUTCHOUC	
10	09403-08313	1	ABRAZADERA	CLAMP	COLLIER	
11	72464-50C00	1	TIRA SELLANTE	WEATHERSTRIP	BANDE ETANCHE	T2,T3
12	09320-06011	2	TOPE DE GOMA	RUBBER STOP	BUTEE CAOUTCHOUC	
13	02112-06165	2	TORNILLO	SCREW	VIS	
14	82110-80012	1	CIERRE CAPO	BONNET LOCK	FERMETURE CAPOT	
15	08321A31068	2	ARANDELA MUELLE	SPRING WASHER	RONDELLE ELASTIQUE	
16	09128-06031	2	TORNILLO	SCREW	VIS	
17	09160-06006	2	ARANDELA PLANA	FLAT WASHER	RONDELLE PLATE	
18	82171-80100	1	SOPORTE MUELLE APERT	OPEN.SPRING BRACKET	SUPPORT RESSORT OUV.	
19	09440-27007	1	MUELLE APERTURA	OPENING SPRING	RESSORT OUVERTURE	
20	02112-06405	1	TORNILLO	SCREW	VIS	
21	08310-11066	1	TUERCA	NUT	ECROU	
22	82160A80010	1	CABLE APERTURA CAPO	BONNET OPENING CABLE	CABLE OUVERT.CAPOT	
23	82191A80002	1	ARANDELA GOMA	RUBBER WASHER	RONDELLE CAOUTCHOUC	
24	84701-83010-5PK	1	ESPEJO RETROVIS.L/D	REAR VIEW MIRROR,R/H	MIROIR-RETROVIS.C/D	ALTERN.
	84701A83010-5PK	1	ESPEJO RETROVIS.L/D	REAR VIEW MIRROR,R/H	MIROIR-RETROVIS.C/D	
25	84702-83010-5PK	1	ESPEJO RETROVIS.L/I	REAR VIEW MIRROR,L/H	MIROIR-RETROVIS.C/G	ALTERN.
	84702A83010-5PK	1	ESPEJO RETROVIS.L/I	REAR VIEW MIRROR,L/H	MIROIR-RETROVIS.C/G	
26	11962A80C12	1	ETIQU.INSTRUCC.MANDO	CONTROL INSTR.PLATE	ETIQUETTE INST.CONTR	

FIG.66

J-05

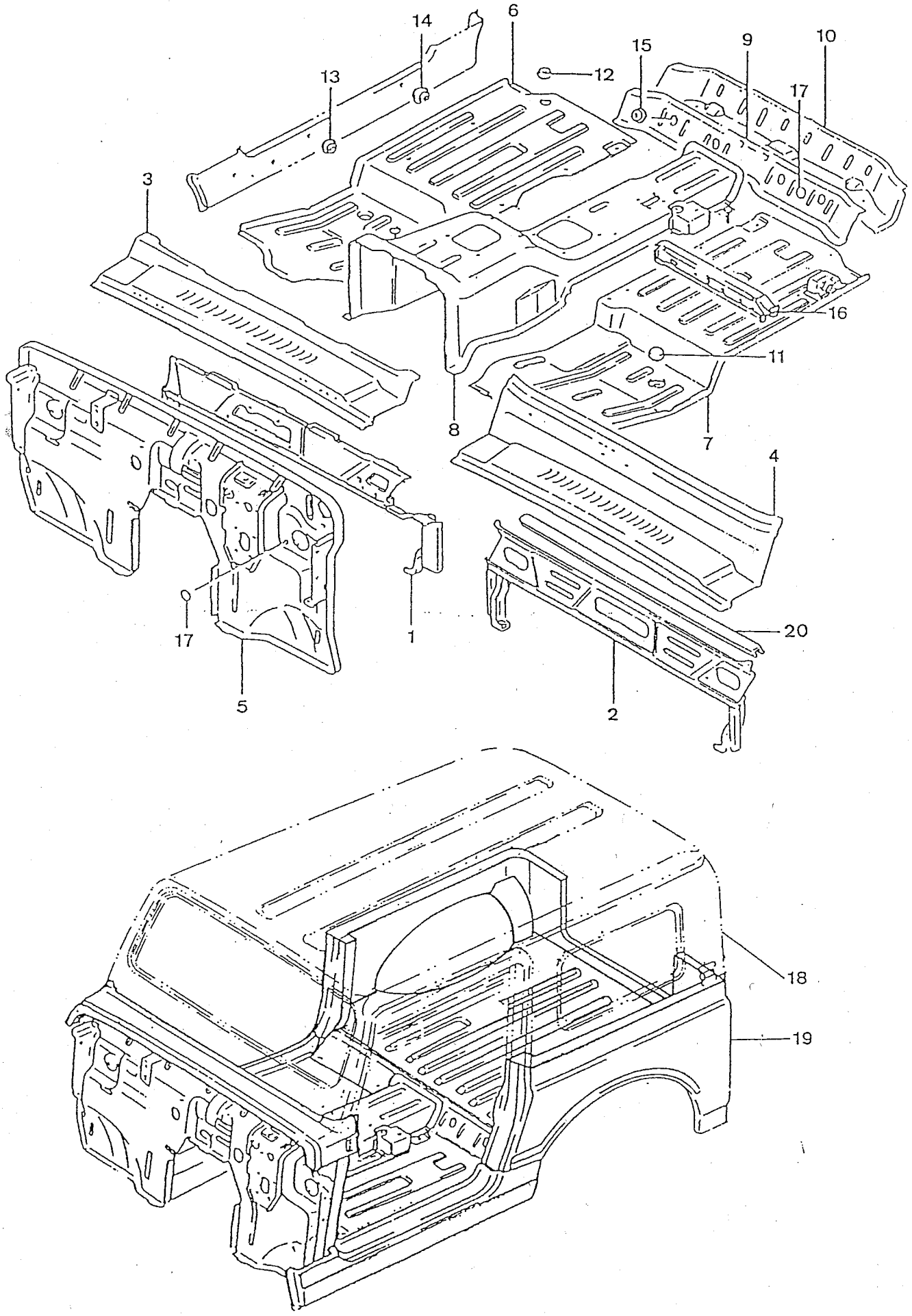

PUBLICACION N:A01116 GRUPO=CARROCERIA SUBGRUPO=J-05PANEL PISO BODY
EDICION N: 1 GROUP=BODY SUBGROUP=J-05BODY FLOOR PANEL
GROUPE=CARROSSERIE SUBGROUPE=J-05PANNEAU ETAG.CAR

N.FIG PLATE N.FIG	N.PIEZA PARTNUMBER N.PIECE	CAN QTY OUT	DENOMINACION	DESCRIPTION	DENOMINATION	OBSERVACIONES
1	59600A83012	1	PANEL TRAS.SUP.'J'	UPPER REAR PANEL,'J'	PANNEAU ARR.SUP.'J'	
2	59600-83111	1	PANEL TRAS.SUP.'V'	UPPER REAR PANEL,'V'	PANNEAU ARR.SUP.'V'	
3	59300A83002	1	PANEL TABLERO,'J'	DASH BOARD PANEL,'J'	PANNEAU TAB.BORD,'J'	
4	59300A80144	1	PANEL TABLERO,'V'	DASH BOARD PANEL,'V'	PANNEAU TAB.BORD,'V'	
5	61100A80210	1	PANEL SALPICADERO	DASH BOARD PANEL	PANNEAU TABL.BORD	H 121456
	61100C80210	1	PANEL SALPICADERO	DASH BOARD PANEL	PANNEAU TABL.BORD	D 121457
6	61400A70A10	1	PANEL PISO DEL.L/D	FR.FLOOR PANEL,R/H	PANNEAU ETAGE AV.C/D	T2,T3
	61400A83040	1	PANEL PISO DEL.L/D	FR.FLOOR PANEL,R/H	PANNEAU ETAGE AV.C/D	T1
7	61500-70A10	1	PANEL PISO DEL.L/I	FR.FLOOR PANEL,L/H	PANNEAU ETAGE AV.C/G	
8	61600A83011	1	PANEL PISO TUNEL	TUNNEL FLOOR PANEL	PANNEAU ETAGE TUNEL	
9	61811-83000	1	MIEMBR.PISO CENT.N.1	CEN.FLOOR MEMBER N.1	MEMBRE ETAG.CENT.N.1	
10	61820B83010	1	C/PISO CENTRAL,N.2	CENTR.FLOOR ASSY,N.2	ENS.ETAGE CENTR.N.2	
11	09250-40002	4	TAPON PISO TRASERO	REAR FLOOR PLUG	BOUCHON ETAGE ARR.	
12	09250-30002	2	TAPON PISO TRASERO	REAR FLOOR PLUG	BOUCHON ETAGE ARR.	
13	50027-00000	4	TAPON PISO TRASERO	REAR FLOOR PLUG	BOUCHON ETAGE ARR.	
14	09250-25007	2	TAPON PISO TRASERO	REAR FLOOR PLUG	BOUCHON ETAGE ARR.	
15	50027-00000	4	TAPON PISO TRASERO	REAR FLOOR PLUG	BOUCHON ETAGE ARR.	
16	61550-57C00	1	REFUER.DEL.ASIEN.L/I	SEAT FR.REINFORC.L/H	RENFORT AV.SIEGE,C/G	T2,T3
	61550-80001	1	REFUER.DEL.ASIEN.L/I	SEAT FR.REINFORC.L/H	RENFORT.AV.SIEGE,C/G	T1
17	72115-70000	2	PELICULA	FILM	FILM	
18	BODY-SAMUR-V	1	CARROCERIA MOD.'V'	'V' MOD.BODY	CARROSSERIE MOD.'V'	
19	BODY-SAMUR-J	1	CARROCERIA MOD.'J'	'J' MOD.BODY	CARROSSERIE MOD.'J'	
20	72464-50C00	1	PERFIL DE GOMA	RUBBER PROFILE	PROFIL CAOUTCHOUC	

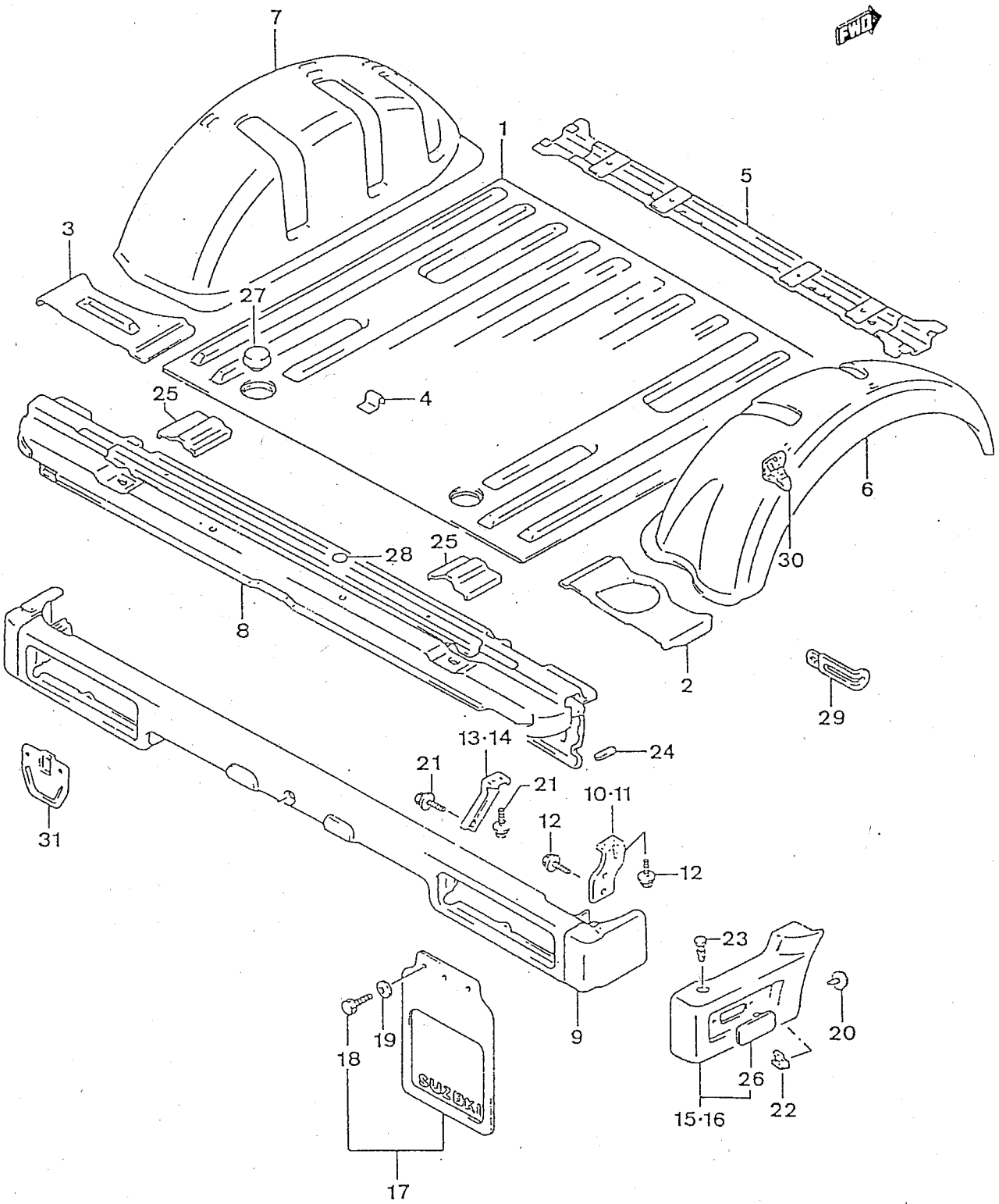
FWD
7
1
5
3
27
4
25
6
28
25
30
8
2
29
13·14
24
21
21
10·11
31
12
12
23
9
20
18
19
26
22
15·16
17

PUBLICACION N:A01116 GRUPO=CARROCERIA SUBGRUPO=J-06PISO TRASERO
EDICION N: 1 GROUP=BODY SUBGROUP=J-06REAR FLOOR
GROUPE=CARROSSERIE SUBGROUPE=J-06ETAGE ARRIERE

N.FIG PLATE N.FIG	N.PIEZA PARTNUMBER N.PIECE	CAN QTY OUT	DENOMINACION	DESCRIPTION	DENOMINATION	OBSERVACIONES
1	62111A83090	1	PANEL PISO TRASERO	REAR FLOOR PANEL	PANNEAU ETAGE ARR.	
2	62112A80000	1	PANEL PISO LAT.L/D	SIDE FLOOR PANEL,R/H	PANNEAU ETAG.LAT.C/D	
3	62113-80000	1	PANEL PISO LAT.L/I	SIDE FLOOR PANEL,L/H	PANNEAU ETAG.LAT.C/G	
4	73722-63001	1	GRAPA	CLAMP	COLLIER	
5	62120A83020	1	REFUERZO TRAS.PISO	FLOOR REAR REINFORC.	RENFORT ETAGE ARR.	
6	62211-70A00	1	PANEL RUEDA,L/D	WHEEL PANEL,R/H	PANNEAU ROUE,C/D	
7	62311-70A00	1	PANEL RUEDA,L/I	WHEEL PANEL,L/H	PANNEAU ROUE,C/G	
8	62500-70A30	1	SOPORTE PISO TRAS.	REAR FLOOR BRACKET	SUPPORT ETAGE ARR.	H 99623
	62500A70A30	1	SOPORTE PISO TRAS.	REAR FLOOR BRACKET	SUPPORT ETAGE ARR.	D 99624
9	71810A83301-5PK	1	C/PARAGOLPES	BUMPER ASSY	ENS.PARECHOCS	
10	71821-80300	1	SOPORTE,L/I	BRACKET,L/H	SUPPORT,C/G	
11	71822-80300	1	SOPORTE,L/D	BRACKET,R/H	SUPPORT,C/D	
12	01514-06123	6	TORNILLO	SCREW	VIS	
13	71824-83300	1	SOPORTE INTERM,L/D	INTERM.BRACKET,R/H	SUPPORT INTERM.C/D	H 99623
	71824A83300	1	SOPORTE INTERM,L/D	INTERM.BRACKET,R/H	SUPPORT INTERM.C/D	D 99624
14	71825-83300	1	SOPORTE INTERM,L/I	INTERM.BRACKET,L/H	SUPPORT INTERM.C/G	H 99623
	71825A83300	1	SOPORTE INTERM,L/I	INTERM.BRACKET,L/H	SUPPORT INTERM.C/G	D 99624
15	71830-70A20	1	PROTECTOR TRAS.L/D	REAR PROTECTOR,R/H	PROTECTEUR ARR.C/D	T3
	71831A83301	1	PROTECTOR TRAS.L/D	REAR PROTECTOR,R/H	PROTECTEUR ARR.C/D	T1,T2
16	71832A83301	1	PROTECTOR TRAS.L/I	REAR PROTECTOR,L/H	PROTECTEUR ARR.C/G	T1,T2
	71840-70A20	1	PROTECTOR TRAS.L/I	REAR PROTECTOR,L/H	PROTECTEUR ARR.C/G	T3
17	50053-00000	2	FALDILLA TRASERA	REAR SKIRT	JUPE ARRIERE	E04
	72261A80002	2	FALDILLA TRASERA	REAR SKIRT	JUPE ARRIERE	
18	01104-06126	4	TORNILLO	SCREW	VIS	
19	09160-06027	4	ARANDELA PLANA	FLAT WASHER	RONDELLE PLATE	
20	08322-21053	4	ARANDELA PLANA	FLAT WASHER	RONDELLE PLATE	
	09132-05029	4	TORNILLO	SCREW	VIS	
21	01104-06126	4	TORNILLO	SCREW	VIS	
	02011-00000	4	ARANDELA PLANA	FLAT WASHER	RONDELLE PLATE	
22	09148A05013	4	TUERCA	NUT	ECROU	
23	09409A07317	4	CLIP	CLIP	CLIP	
24	72876-80000	2	SELLANTE SOPORTE	BRACKET SEALING	JOINT SUPPORT	
25	62114C83000	4	C/REFUER.ASIE.TRA.LD	RR SEAT REINF.ASS.RH	ENS.RENF.SIEG.ARR.CD	
26	71833-70A10	2	TAPA PROTECTOR PARAG	BUMPER PROTECT.COVER	COUVERC.PROTEC.PAREC	
27	09250-40002	2	TAPON PISO TRASERO	REAR FLOOR PLUG	BOUCHON ETAGE ARR.	
28	52181-00000	2	LAMINA ADHESIVA	ADHESIVE PLATE	PLAQUE ADHESIVE	
29	09405-80302	6	CLIP	CLIP	CLIP	D 121164
	09405A65302	3	CLIP	CLIP	CLIP	H 121163
30	08315-01069	1	TUERCA	NUT	ECROU	
	62212T80080	1	C/SOPORTE PROT.TUBO	HOSE PROT.BRACKET A/	E/SUPPORT PROT.TUYAU	
31	72272-80000	1	SOP.EXT.FALD.L/I	SKIRT OUT.BRACK.L/H	SUP.EXT.JUPE,C/G	

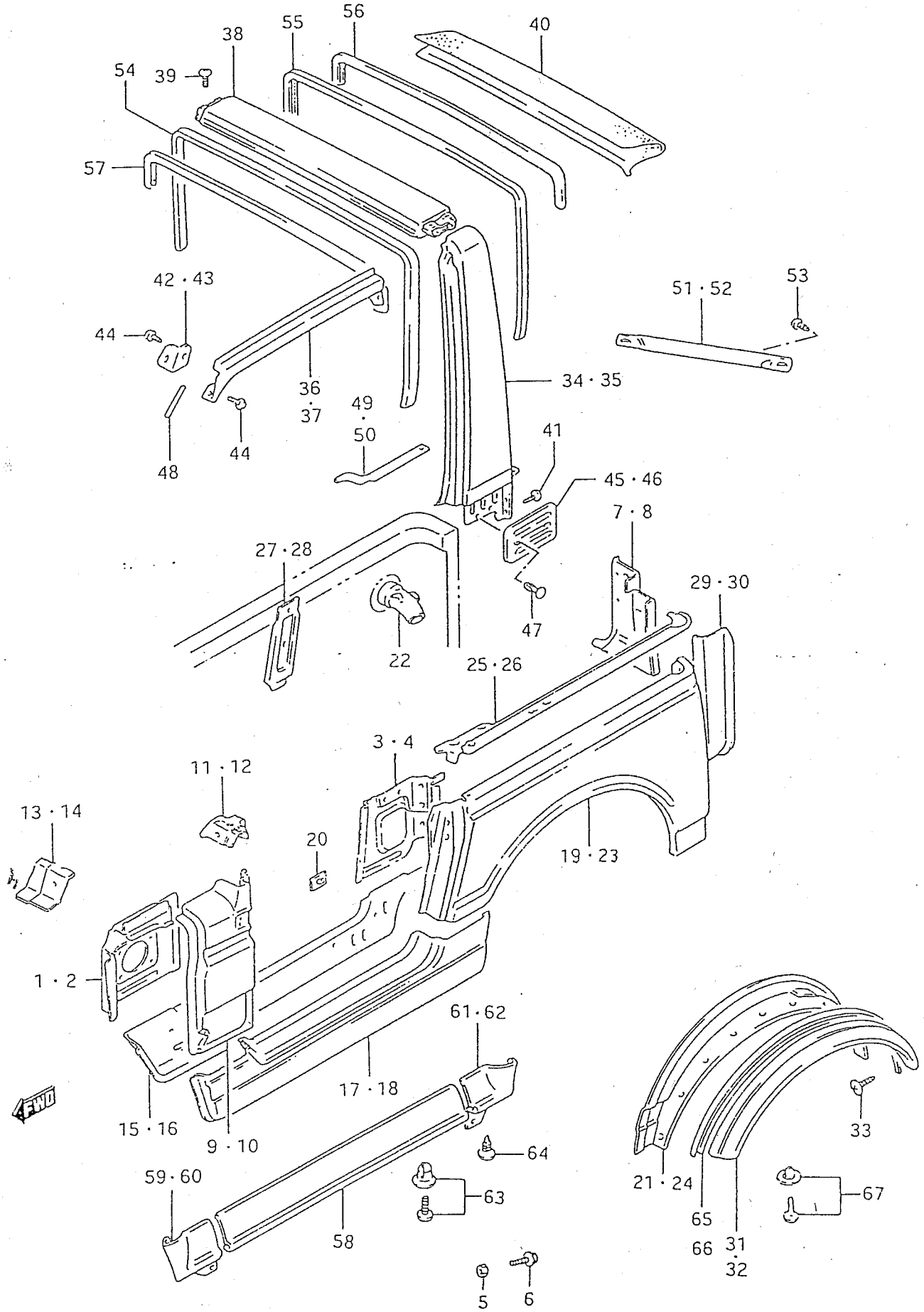
38
55
56
40
54
39
57
42 · 43
44
48
36 · 37
44
49 · 50
34 · 35
51 · 52
53
41
45 · 46
7 · 8
27 · 28
22
47
29 · 30
25 · 26
3 · 4
11 · 12
13 · 14
20
19 · 23
1 · 2
61 · 62
17 · 18
15 · 16
9 · 10
64
63
59 · 60
58
5
6
33
21 · 24
65
66
31 · 32
67

PUBLICACION N:A01116 GRUPO=CARROCERIA SUBGRUPO=J-07PANEL LAT.'J'
EDICION N: 1 GROUP=BODY SUBGROUP=J-07SIDE PANEL,'J'
GROUPE=CARROSSERIE SUBGROUPE=J-07PANNEAU LAT.'J'

N.FIG PLATE N.FIG	N.PIEZA PARTNUMBER N.PIECE	CAN QTY OUT	DENOMINACION	DESCRIPTION	DENOMINATION	OBSERVACIONES
1	63110-70A00	1	C/PANEL INT.L/D	INNER PANEL ASSY,R/H	ENS.PANNEAU INT.C/D	T3
	63110-80000	1	C/PANEL INT.L/D	INNER PANEL ASSY,R/H	ENS.PANNEAU INT.C/D	T1,T2
2	63510-70A00	1	C/PANEL INT.L/I	INNER PANEL ASSY,L/H	ENS.PANNEAU INT.C/G	T3
	63510-80000	1	C/PANEL INT.L/I	INNER PANEL ASSY,L/H	ENS.PANNEAU INT.C/G	T1,T2
3	63230-80041	1	C/PANEL CENTRAL,L/D	CENTR.PANEL ASSY,R/H	ENS.PANNEAU CENT.C/D	
4	63630-80041	1	C/PANEL CENTRAL,L/I	CENTR.PANEL ASSY,L/H	ENS.PANNEAU CENT.C/G	
5	08316A16063	4	TUERCA FIJACION	FASTENING NUT	ECROU FIXATION	T3
6	09139-06058	6	TORNILLO	SCREW	VIS	T3
7	63310-80001	1	C/PANEL INT.L/D	INNER PANEL ASSY,R/H	ENS.PANNEAU INT.C/D	
8	63710-80001	1	C/PANEL INT.L/I	INNER PANEL ASSY,L/H	ENS.PANNEAU INT.C/G	
9	64110-80031	1	PANEL DEL.L/D	FRONT PANEL,R/H	PANNEAU AVANT,C/D	
10	64510-80031	1	PANEL DEL.L/I	FRONT PANEL,L/H	PANNEAU AVANT,C/G	
11	64120-80011	1	PANEL SUP.DEL.L/D	FR.UPPER PANEL,R/H	PANNEAU SUP.AV.C/D	
12	64520-80011	1	PANEL SUP.DEL.L/I	FR.UPPER PANEL,L/H	PANNEAU SUP.AV.C/G	
13	64116-50C10	1	ANGULO BISAGRA,L/D	HINGE ANGLE,R/H	ANGLE CHARNIERE,C/D	T2,T3
	64116-80001	1	ANGULO BISAGRA,L/D	HINGE ANGLE,R/H	ANGLE CHARNIERE,C/D	T1
14	64516-50C10	1	ANGULO BISAGRA,L/I	HINGE ANGLE,L/H	ANGLE CHARNIERE,C/G	T2,T3
	64516-80001	1	ANGULO BISAGRA,L/I	HINGE ANGLE,L/H	ANGLE CHARNIERE,C/G	T1
15	61490-80001	1	PANEL UMBRAL,L/D	SILL PANEL,R/H	PANNEAU SEUIL,C/D	
16	61590-80001	1	PANEL UMBRAL,L/I	SILL PANEL,L/H	PANNEAU SEUIL,C/G	
17	64150-73A20	1	PANEL UMBRAL EXT.L/D	OUTER SILL PANEL,R/H	PANN.SEUIL EXT.C/D	
18	64550-73A20	1	PANEL UMBRAL EXT.L/I	OUTER SILL PANEL,L/H	PANN.SEUIL EXT.C/G	
19	64200-70A00	1	PANEL TRAS.LAT.L/D	SIDE REAR PANEL,R/H	PANNEAU ARR.LAT.C/D	T2
	64200-70A01	1	PANEL TRAS.LAT.L/D	SIDE REAR PANEL,R/H	PANNEAU ARR.LAT.C/D	T1
	64200A50C51	1	PANEL TRAS.LAT.L/D	SIDE REAR PANEL,R/H	PANNEAU ARR.LAT.C/D	T3
20	61492-80000	2	REFUERZO CINTURON	BELT REINFORCEMENT	RENFORT CEINTURE	
21	64240-70A10	1	SOPORTE EXT.LAT,L/D	SIDE OUT.BRACKET,R/H	SUPPORT EXT.LAT.C/D	T3
	64240-83003	1	SOPORTE EXT.LAT,L/D	SIDE OUT.BRACKET,R/H	SUPPORT EXT.LAT.C/D	T1,T2
22	8921CA80011	1	BOCA LLENADO	FILLER NECK	GOULOTTE REMPLISSAGE	
23	64600-83001	1	PANEL TRAS.LAT.L/I	SIDE REAR PANEL,L/H	PANNEAU ARR.LAT,C/G	T2
	64600-83002	1	PANEL TRAS.LAT.L/I	SIDE REAR PANEL,L/H	PANNEAU ARR.LAT,C/G	T1
	64600A52C21	1	PANEL TRAS.LAT.L/I	SIDE REAR PANEL,L/H	PANNEAU ARR.LAT,C/G	T3

FIG.68.1

J-07.1

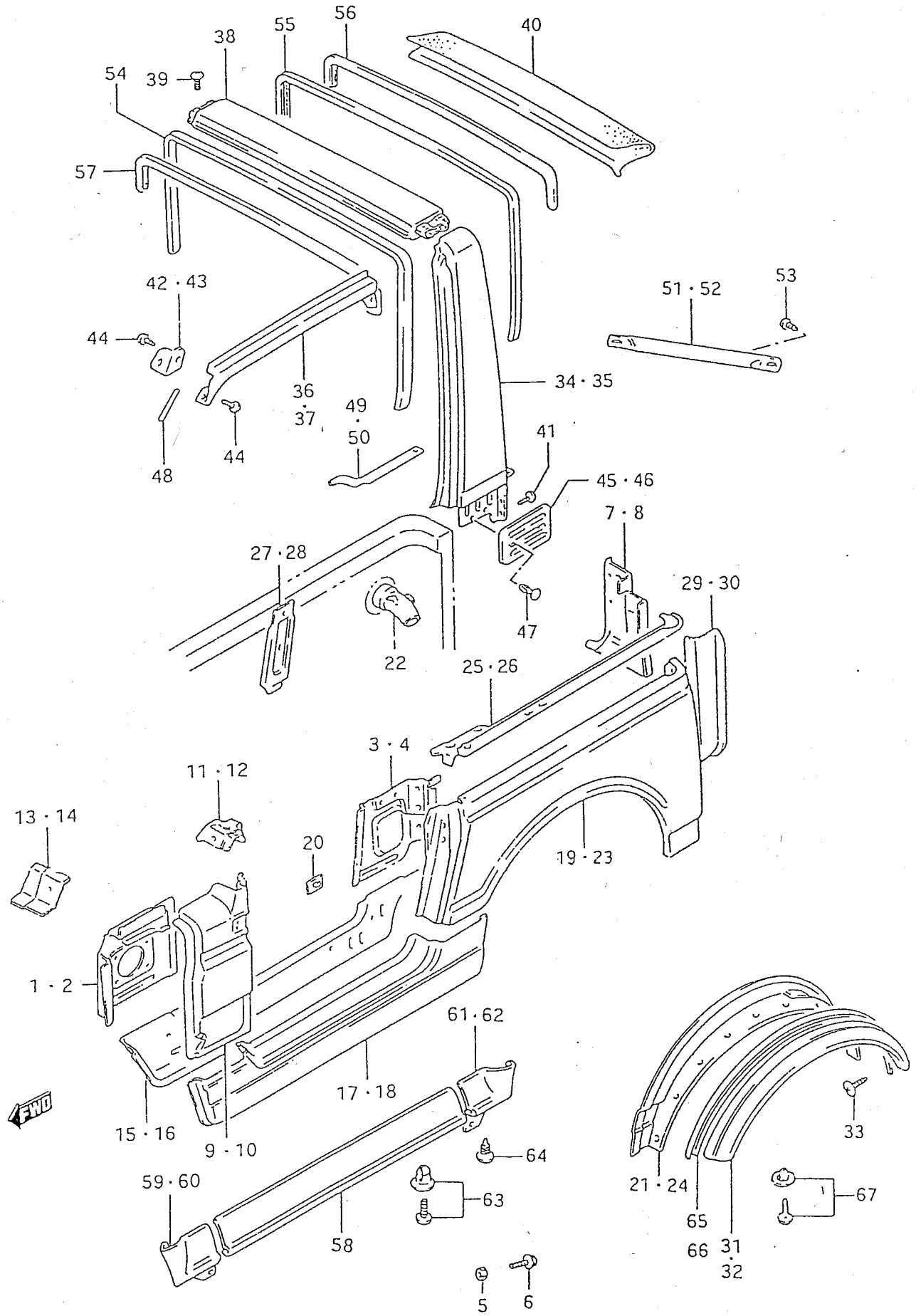

56
55
40
38
54
39
57
42 · 43
44
51 · 52
53
36
37
49
50
34 · 35
48
44
41
45 · 46
7 · 8
27 · 28
29 · 30
47
22
25 · 26
3 · 4
11 · 12
13 · 14
20
19 · 23
1 · 2
61 · 62
17 · 18
FWD
15 · 16
9 · 10
64
33
59 · 60
63
21 · 24
67
65
58
66
31
32
5
6

PUBLICACION N:A01116 GRUPO=CARROCERIA SUBGRUPO=J-07.1PANEL LAT.'J'
EDICION N: 1 GROUP=BODY SUBGROUP=J-07.1SIDE PANEL,'J'
GROUPE=CARROSSERIE SUBGROUPE=J-07.1PANNEAU LAT.J

N.FIG PLATE N.FIG	N.PIEZA PARTNUMBER N.PIECE	CAN QTY OUT	DENOMINACION	DESCRIPTION	DENOMINATION	OBSERVACIONES
24	64640-70A10	1	SOPORTE EXT.LAT.L/I	SIDE OUT.BRACKET,L/H	SUPPORT EXT.LAT.C/G	T3
	64640-83003	1	SOPORTE EXT.LAT.L/I	SIDE OUT.BRACKET,L/H	SUPPORT EXT.LAT.C/G	T1,T2
25	64230-80492	1	PANEL SUP.LAT.CAJ.LD	BOX SIDE UP.PANEL,RH	PANN.SUP.LAT.BOIT.CD	
26	64630-80492	1	PANEL SUP.LAT.CAJ.LI	BOX SIDE UP.PANEL,LH	PANN.SUP.LAT.BOIT.CG	
27	64235-80001	1	REFUERZO SUP.CAJA,LD	BOX UPPER REINFOR.RH	RENFORT SUP.BOITE,CD	
28	64635-80001	1	REFUERZO SUP.CAJA,LI	BOX UPPER REINFOR.LH	RENFORT SUP.BOITE,CG	
29	64311-80001	1	PANEL EXT.TRAS.L/D	REAR OUTER PANEL,R/H	PANNEAU EXT.ARR.C/D	
30	64710-80001	1	PANEL EXT.TRAS.L/I	REAR OUTER PANEL,L/H	PANNEAU EXT.ARR.C/G	
31	64250-70A00	1	C/ALETIN TRAS.L/D	REAR TRIM ASSY,R/H	E/ENJOLIV.ARR.C/D	T3
32	64650-70A00	1	C/ALETIN TRAS.L/I	REAR TRIM ASSY,L/H	E/ENJOLIV.ARR.C/G	T3
33	09139-06036	8	TORNILLO FIJACION	FASTENING SCREW	VIS FIXATION	T3
34	51437-00000	1	EXTENSION CENTR.L/D	CENTR.EXTENSION,R/H	EXTENSION CENTR.C/D	H 111825
	65710A80302	1	EXTENSION CENTR.L/D	CENTR.EXTENSION,R/H	EXTENSION CENTR.C/D	D 111826
	65710A80304	1	EXTENSION CENTR.L/D	CENTR.EXTENSION,R/H	EXTENSION CENTR.C/D	T3
35	51438-00000	1	EXTENSION CENTR.L/I	CENTR.EXTENSION,L/H	EXTENSION CENTR.C/G	H 111825
	65750A80302	1	EXTENSION CENTR.L/I	CENTR.EXTENSION,L/H	EXTENSION CENTR.C/G	D 111826
	65750A80304	1	EXTENSION CENTR.L/I	CENTR.EXTENSION,L/H	EXTENSION CENTR.C/G	T3
36	65770-80010-0DG	1	PERFIL DEL.TECHO,L/D	ROOF FR.PROFILE,R/H	PROFILE AV.TOIT,C/D	
	65770-80010-19H	1	PERFIL DEL.TECHO,L/D	ROOF FR.PROFILE,R/H	PROFILE AV.TOIT,C/D	
	65770-80010-1FG	1	PERFIL DEL.TECHO,L/D	ROOF FR.PROFILE,R/H	PROFILE AV.TOIT,C/D	
	65770-80010-1FH	1	PERFIL DEL.TECHO,L/D	ROOF FR.PROFILE,R/H	PROFILE AV.TOIT,C/D	
	65770-80010-26U	1	PERFIL DEL.TECHO,L/D	ROOF FR.PROFILE,R/H	PROFILE AV.TOIT,C/D	
	65770-80010-37V	1	PERFIL DEL.TECHO,L/D	ROOF FR.PROFILE,R/H	PROFILE AV.TOIT,C/D	
	65770-80010-38B	1	PERFIL DEL.TECHO,L/D	ROOF FR.PROFILE,R/H	PROFILE AV.TOIT,C/D	
37	65780-80010-0DG	1	PERFIL DEL.TECHO,L/I	ROOF FR.PROFILE,L/H	PROFILE AV.TOIT,C/G	
	65780-80010-19H	1	PERFIL DEL.TECHO,L/I	ROOF FR.PROFILE,L/H	PROFILE AV.TOIT,C/G	
	65780-80010-1FG	1	PERFIL DEL.TECHO,L/I	ROOF FR.PROFILE,L/H	PROFILE AV.TOIT,C/G	
	65780-80010-1FH	1	PERFIL DEL.TECHO,L/I	ROOF FR.PROFILE,L/H	PROFILE AV.TOIT,C/G	
	65780-80010-26U	1	PERFIL DEL.TECHO,L/I	ROOF FR.PROFILE,L/H	PROFILE AV.TOIT,C/G	
	65780-80010-37V	1	PERFIL DEL.TECHO,L/I	ROOF FR.PROFILE,L/H	PROFILE AV.TOIT,C/G	
	65780-80010-38B	1	PERFIL DEL.TECHO,L/I	ROOF FR.PROFILE,L/H	PROFILE AV.TOIT,C/G	
38	65730A80012	1	EXTENSION CENTRAL	CENTRAL EXTENSION	EXTENSION CENTRALE	H 111825
	65730A80015	1	EXTENSION CENTRAL	CENTRAL EXTENSION	EXTENSION CENTRALE	D 111826
	65730A80016	1	EXTENSION CENTRAL	CENTRAL EXTENSION	EXTENSION CENTRALE	
39	09125-06060	8	TORNILLO	SCREW	VIS	

FIG.68.2

J-07.2

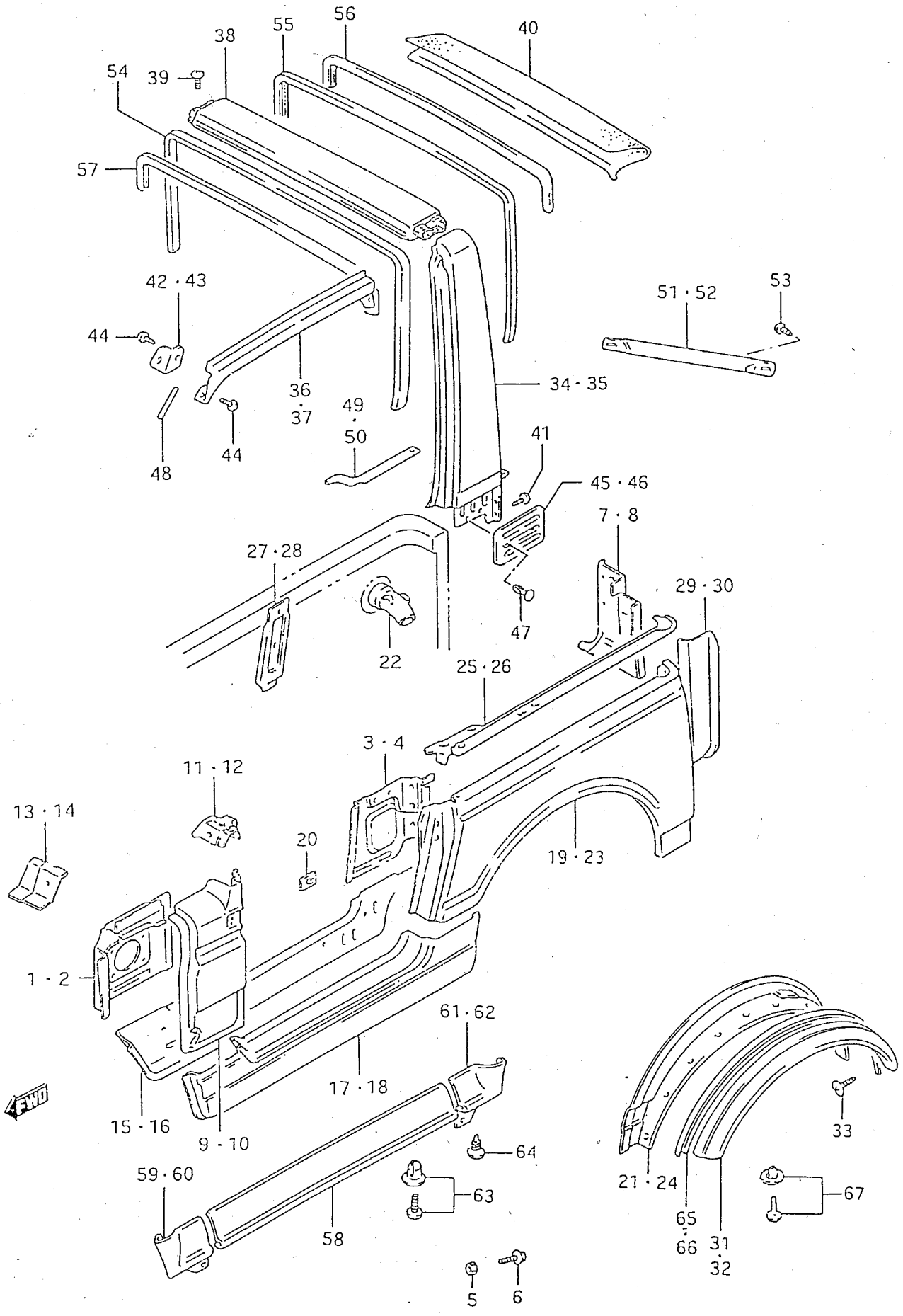

56
55
38
40
54
39
57
42・43
44
51・52
53
36・37
49・50
34・35
48
44
41
45・46
7・8
27・28
29・30
47
22
25・26
3・4
11・12
13・14
20
19・23
1・2
61・62
17・18
FWD
15・16
9・10
64
33
59・60
63
21・24
67
65・66
31・32
58
5
6

PUBLICACION N:A01116 GRUPO=CARROCERIA SUBGRUPO=J-07.2PANEL LAT.'J'
EDICION N: 1 GROUP=BODY SUBGROUP=J-07.2SIDE PANEL,'J'
GROUPE=CARROSSERIE SUBGROUPE=J-07.2PANNEAU LAT.J

N.FIG PLATE N.FIG	N.PIEZA PARTNUMBER N.PIECE	CAN QTY OUT	DENOMINACION	DESCRIPTION	DENOMINATION	OBSERVACIONES
40	78681A80321	1	RECUBRIMIENTO BARRA	BAR GARNISH	GARNITURE BARRE	
41	09125-08002	10	TORNILLO	SCREW	VIS	
42	65775-80010	1	SOPORTE TECH.DEL.L/D	FR.ROOF BRACKET,R/H	SUPPORT TOIT AV.C/D	
43	65785-80010	1	SOPORTE TECH.DEL.L/I	FR.ROOF BRACKET,L/H	SUPPORT TOIT AV.C/G	
44	02142-06163	10	TORNILLO	SCREW	VIS	
45	50963-00000	1	EMBELLECEDOR,L/D	GARNISH,R/H	ENJOLIVEUR,C/D	JH
	77311-80000	1	EMBELLECEDOR,L/D	GARNISH,R/H	ENJOLIVEUR,C/D	
46	50962-00000	1	EMBELLECEDOR,L/I	GARNISH.L/H	ENJOLIVEUR,C/G	JH
	77312-80000	1	EMBELLECEDOR,L/I	GARNISH,L/H	ENJOLIVEUR,C/G	
47	03111-05303	4	TORNILLO	SCREW	VIS	JH
	09409-05304	4	CLIP	CLIP	CLIP	
48	77313-80001	2	SELLANTE LAT.TECHO	ROOF SIDE SEALING	BAND.ETANCH.LAT TOIT	
49	78621-80001	1	RELLENO EXTENS.L/D	EXTENS.BACK-PACK.R/H	GARNISSAGE EXTENS.CD	
50	78661-80001	1	RELLENO EXTENS.L/I	EXTENS.BACK-PACK.L/H	GARNISSAGE EXTENS.CG	
51	78611-80000	1	BARRA EXTENSION,L/D	EXTENSION BAR,R/H	BARRE EXTENSION,C/D	
52	78651-80000	1	BARRA EXTENSION,L/I	EXTENSION BAR,L/H	BARRE EXTENSION,C/G	
53	09126A08005	2	TORNILLO	SCREW	VIS	
54	84650-80030	1	CUBIERTA CENTRAL	CENTRAL COVER	COUVERCLE CENTRAL	
55	84646-80000	1	TAPIC.COLUMNA CENTR.	CENTRAL COLUMN TRIM	GARNIT.COLONNE CENTR	
56	84640-80020	1	CUBIERTA CENTRAL	CENTRAL COVER	COUVERCLE CENTRAL	
57	84640-80030	2	CUBIERTA CENTR.EXT.	OUTER CENTR.COVER	COUVERCLE CENT.EXT.	
58	77611-83020	2	MOLDURA LATERAL	SIDE MOLDING	MOULURE LATERALE	
59	77613-70A00	1	REMATE MOLDURA,L/D	MOLDING FINISH,R/H	FINITION MOULURE,C/D	T3
	77613-83021	1	REMATE MOLDURA,L/D	MOLDING FINISH,R/H	FINITION MOULURE,C/D	T1,T2
60	77614-70A00	1	REMATE MOLDURA,L/I	MOLDING FINISH,L/H	FINITION MOULURE,C/G	T3
	77614-83021	1	REMATE MOLDURA,L/I	MOLDING FINISH,L/H	FINITION MOULURE,C/G	T1,T2
61	77613-70A00	1	REMATE MOLDURA,L/D	MOLDING FINISH,R/H	FINITION MOULURE,C/D	T3
	77613-83021	1	REMATE MOLDURA,L/D	MOLDING FINISH,R/H	FINITION MOULURE,C/D	T1,T2
62	77614-70A00	1	REMATE MOLDURA,L/I	MOLDING FINISH,L/H	FINITION MOULURE,C/G	T3
	77614-83021	1	REMATE MOLDURA,L/I	MOLDING FINISH,L/H	FINITION MOULURE,C/G	T1,T2
63	09409-07306	8	CLIP EXTENSION	EXTENSION CLIP	CLIP EXTENSION	
64	09409-07310	4	CLIP	CLIP	CLIP	
65	77130-70A00-5WA	1	C/PERFIL,L/I	PROFILE ASSY,L/H	ENS.PROFILE,C/G	T3
	77131-83022B	1	ALETIN TRASERO,L/I	REAR TRIM,L/H	ENJOLIVEUR ARR.C/G	WHITE
66	77140-70A00-5WA	1	C/PERFIL,L/I	PROFILE ASSY,L/H	ENS.PROFILE,C/G	T3
	77141-83022B	1	ALETIN TRASERO,L/D	REAR TRIM,R/H	ENJOLIVEUR ARR.C/D	WHITE
67	09409-07312	12	CLIP	CLIP	CLIP	

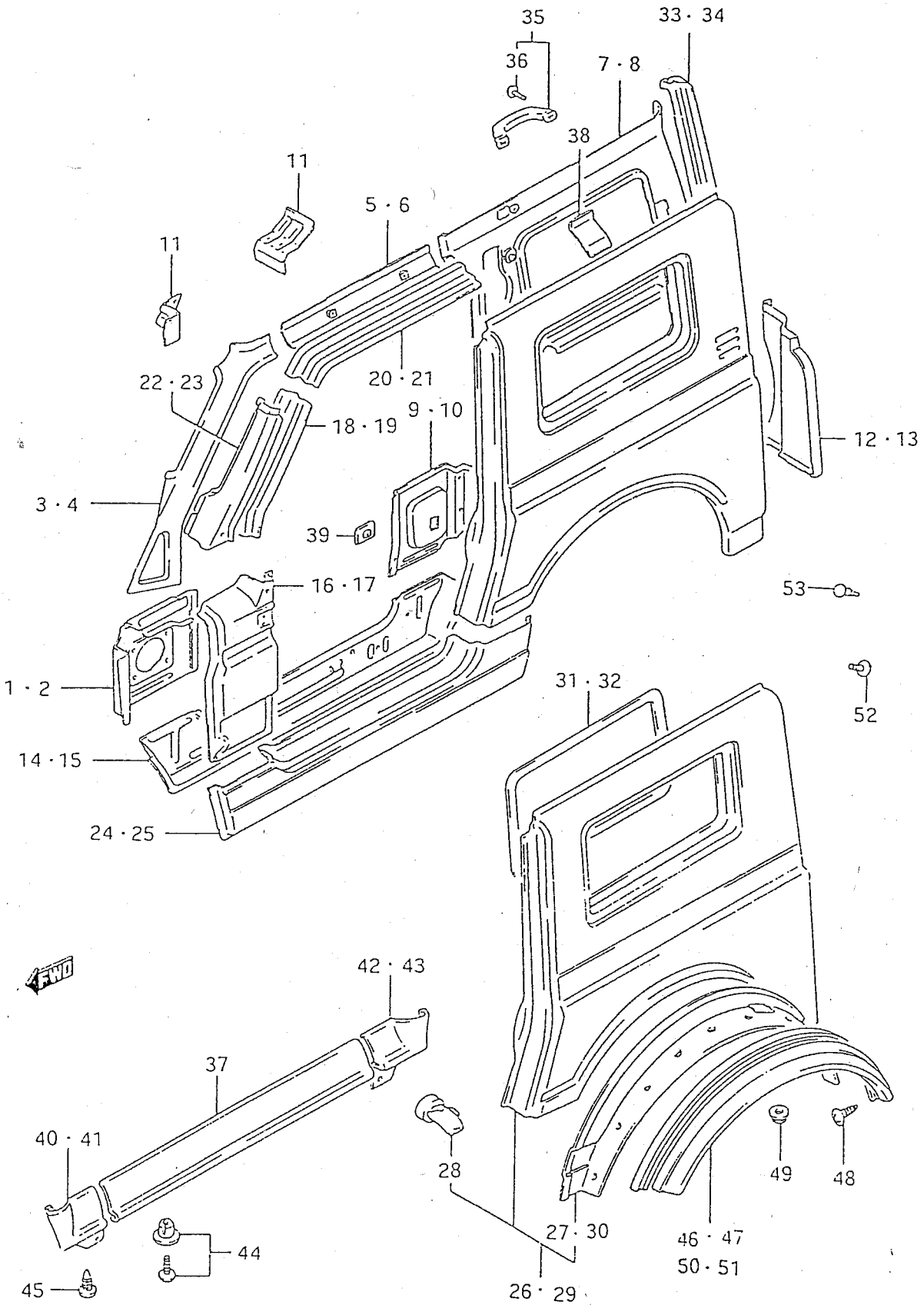
35
33 · 34
36
7 · 8
38
11
5 · 6
11
22 · 23
20 · 21
18 · 19
9 · 10
12 · 13
3 · 4
39
16 · 17
53
1 · 2
31 · 32
52
14 · 15
24 · 25
4WD
42 · 43
37
40 · 41
28
49
48
27 · 30
46 · 47
50 · 51
44
45
26 · 29

PUBLICACION N:A01116 GRUPO=CARROCERIA SUBGRUPO=J-08PANEL LAT.'V'
EDICION N: 1 GROUP=BODY SUBGROUP=J-08SIDE PANEL,'V'
GROUPE=CARROSSERIE SUBGROUPE=J-08PANNEAU LAT.'V'

N.FIG PLATE N.FIG	N.PIEZA PARTNUMBER N.PIECE	CAN QTY OUT	DENOMINACION	DESCRIPTION	DENOMINATION	OBSERVACIONES
1	63110-70A00	1	PANEL INT.DEL.L/D	FR.INNER PANEL,R/H	PANNEAU INT.AV.C/D	T2,T3
	63110-80000	1	PANEL INT.DEL.L/D	FR.INNER PANEL,R/H	PANNEAU INT.AV.C/D	T1
2	63510-70A00	1	PANEL INT.DEL.L/I	FR.INNER PANEL,L/H	PANNEAU INT.AV.C/G	T2,T3
	63510-80000	1	PANEL INT.DEL.L/I	FR.INNER PANEL,L/H	PANNEAU INT.AV.C/G	T1
3	63121-57C00	1	PANEL SUP.DEL.L/D	FR.UPPER PANEL,R/H	PANNEAU SUP.AV.C/D	T2,T3
	63121-80100	1	PANEL SUP.DEL.L/D	FR.UPPER PANEL,R/H	PANNEAU SUP.AV.C/D	T1
4	63521-57C00	1	PANEL SUP.DEL.L/I	FR.UPPER PANEL,L/H	PANNEAU SUP.AV.C/G	T2,T3
	63521-80110	1	PANEL SUP.DEL.L/I	FR.UPPER PANEL,L/H	PANNEAU SUP.AV.C/G	T1
5	63131-80150	1	PANEL SUP.TECHO,L/D	ROOF UPPER PANEL,R/H	PANNEAU SUP.TOIT,C/D	
6	63531-80140	1	PANEL SUP.TECHO,L/I	ROOF UPPER PANEL,L/H	PANNEAU SUP.TOIT,C/G	
7	52775-00000	1	PANEL SUP.LAT.INT.LD	IN.SIDE UP.PANEL,R/H	PANN.SUP.LAT.INT.C/D	T3
	63210A80430	1	PANEL SUP.LAT.INT.LD	IN.SIDE UP.PANEL,R/H	PANN.SUP.LAT.INT.C/D	T1,T2
8	63610-80430	1	PANEL SUP.LAT.INT.LI	IN.SIDE UP.PANEL,L/H	PANN.SUP.LAT.INT.C/G	
9	63231-80152	1	PANEL SUP.LAT.CENT.D	CENT.SIDE UP.PANEL,R	PANN.SUP.LAT.CENTR.D	
10	63631-80152	1	PANEL SUP.LAT.L/I	SIDE UPPER PANEL,L/H	PANNEAU SUP.LAT.C/G	
11	63233-80001	2	SOPORTE TUBO CENTRAL	CENTRAL HOSE BRACKET	SUPPORT TUYAU CENTR.	
12	63310A80150	1	PANEL INT.L/D	INNER PANEL,R/H	PANNEAU INT.C/D	
13	63710-80111	1	PANEL INT.L/I	INNER PANEL,L/H	PANNEAU INT.C/G	
14	61490-80001	1	PANEL UMBRAL INT.L/D	INNER SILL PANEL,R/H	PANN.SEUIL INT.C/D	
15	61590-80001	1	PANEL UMBRAL INT.L/I	INNER SILL PANEL,L/H	PANN.SEUIL INT.C/G	
16	64110-57C10	1	PANEL DEL.L/D	FRONT PANEL,R/H	PANNEAU AVANT,C/D	T2,T3
	64110-80181	1	PANEL DEL.L/D	FRONT PANEL,R/H	PANNEAU AVANT,C/D	T1
17	64510-57C10	1	PANEL DEL.L/I	FRONT PANEL,L/H	PANNEAU AVANT,C/G	T2,T3
	64510-80181	1	PANEL DEL.L/I	FRONT PANEL,L/H	PANNEAU AVANT,C/G	T1
18	64131-80100	1	MARCO DEL.VENTAN.L/D	WINDOW FR.FRAME,R/H	CADRE AV.FENETRE,C/D	
19	64531-80100	1	MARCO DEL.VENTAN.L/I	WINDOW FR.FRAME,L/H	CADRE AV.FENETRE,C/G	
20	64132-80100	1	MARCO DEL.LAT.L/D	SIDE FRONT FRAME,R/H	CADRE AV.LAT.C/D	
21	64532-80100	1	MARCO DEL.LAT.L/I	SIDE FRONT FRAME,L/H	CADRE AV.LAT.C/G	
22	64141-80122	1	PANEL EXT.DEL.L/D	FR.OUTER PANEL,R/H	PANNEAU EXT.AV.C/D	
23	64541-80122	1	PANEL EXT.DEL.L/I	FR.OUTER PANEL,L/H	PANNEAU EXT.AV.C/G	
24	64150-73A20	1	PANEL UMBRAL EXT.L/D	OUTER SILL PANEL,R/H	PANN.EXT.SEUIL,C/D	
25	64550-73A20	1	PANEL UMBRAL EXT.L/I	OUTER SILL PANEL,L/H	PANN.EXT.SEUIL,C/G	
26	64200-50C01	1	PANEL LAT.TRAS.L/D	REAR SIDE PANEL,R/H	PANNEAU LAT.ARR.C/D	T1,T2
	64200A51C11	1	PANEL LAT.TRAS.L/D	REAR SIDE PANEL,R/H	PANNEAU LAT.ARR.C/D	T3
27	64240-83003	1	SOPORTE EXT.L/D	OUTER BRACKET,R/H	SUPPORT EXT.C/D	
28	89210A80011	1	CODO LLENADO	FILLER ELBOW	COUDE REMPLISSAGE	
29	64600-50C01	1	PANEL TRAS.LAT.L/I	SIDE REAR PANEL,L/H	PANNEAU EXT.LAT.C/G	T1,T2
	64600A51C21	1	PANEL TRAS.LAT.L/I	SIDE REAR PANEL,L/H	PANNEAU EXT.LAT.C/G	T3

FIG.69.1

J-08.1

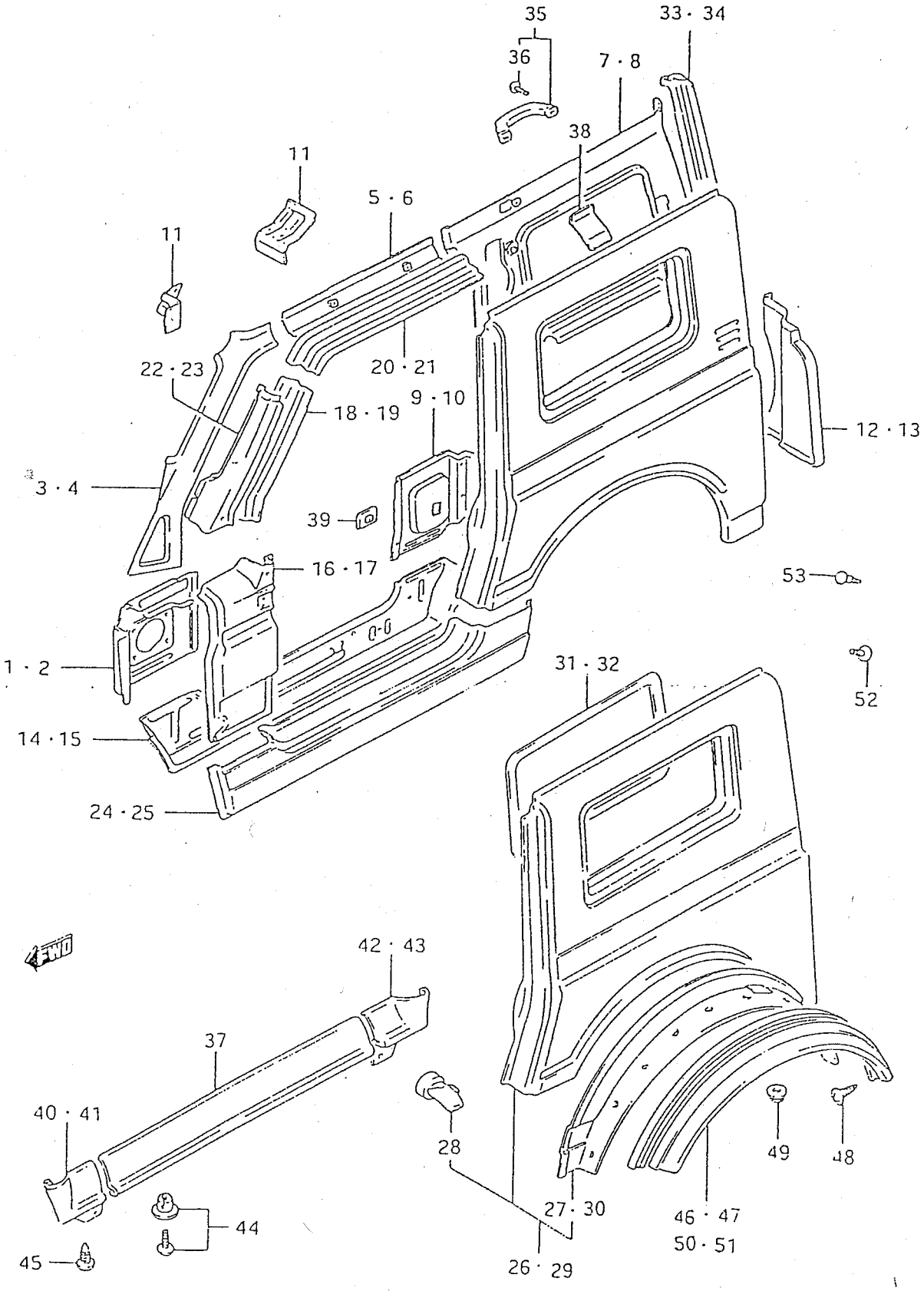
35
33 · 34
36
7 · 8
38
11
5 · 6
11
22 · 23
20 · 21
18 · 19
9 · 10
12 · 13
3 · 4
39
16 · 17
53
1 · 2
31 · 32
52
14 · 15
24 · 25
4WD
42 · 43
37
40 · 41
28
49
48
27 · 30
46 · 47
50 · 51
44
45
26 · 29

PUBLICACION N:A01116 GRUPO=CARROCERIA SUBGRUPO=J-08.1PANEL LAT.'V'
EDICION N: 1 GROUP=BODY SUBGROUP=J-08.1SIDE PANEL,'V'
GROUPE=CARROSSERIE SUBGROUPE=J-08.1PANNEAU LAT.V

N.FIG PLATE N.FIG	N.PIEZA PARTNUMBER N.PIECE	CAN QTY OUT	DENOMINACION	DESCRIPTION	DENOMINATION	OBSERVACIONES
30	64640-83003	1	SOPORTE EXT.L/I	OUTER BRACKET,L/H	SUPPORT EXT.C/G	
31	64217-80130	1	TAPA VENTANA,L/D	WINDOW COVER,R/H	COUVERC.FENETRE,C/D	
32	64617-80130	1	TAPA VENTANA,L/I	WINDOW COVER,L/H	COUVERC.FENETRE,C/G	
33	64310-80100	1	PANEL EXT.TRAS.L/D	REAR OUTER PANEL,R/H	PANNEAU EXT.ARR.C/D	
34	64710-80100	1	PANEL EXT.TRAS.L/I	REAR OUTER PANEL,L/H	PANNEAU EXT.ARR.C/G	
35	51439-00000	3	ASIDERO GRIS	GREY HANDLE	POIGNEE GRISE	
	86211-79000	3	ASIDERO TECHO	ROOF HANDLE	POIGNEE TOIT	
36	09125-06041	6	TORNILLO ASIDERO	HANDLE SCREW	VIS POIGNEE	
37	77611-83020	2	MOLDURA LATERAL	SIDE MOLDING	MOULURE LATERAL	
38	64216-80140	3	REFUERZO ASIDERO	HANDLE REINFORCEMENT	RENFORT POIGNEE	
39	61492-80000	2	REFUERZO CINTURON	BELT REINFORCEMENT	RENFORT CEINTURE	
40	77614-70A00	1	REMATE MOLD.DEL.L/I	FR.MOLD.FINISH,L/H	FINITION MOUL.AV.C/G	T3
	77614-83021	1	REMATE MOLD.DEL.L/I	FR.MOLD.FINISH,L/H	FINITION MOUL.AV.C/G	T1,T2
41	77613-70A00	1	REMATE MOLD.DEL.L/D	FR.MOLD.FINISH,R/H	FINITION MOUL.AV.C/D	T3
	77613-83021	1	REMATE MOLD.DEL.L/D	FR.MOLD.FINISH,R/H	FINITION MOUL.AV.C/D	T1,T2
42	77613-70A00	1	REMATE MOLD.TRAS.L/D	RR.MOLD.FINISH,R/H	FINIT.MOUL.ARR.C/D	T3
	77613-83021	1	REMATE MOLD.TRAS.L/D	RR.MOLD.FINISH,R/H	FINIT.MOUL.ARR.C/D	T1,T2
43	77614-70A00	1	REMATE MOLD.TRAS.L/I	RR.MOLD.FINISH,L/H	FINIT.MOUL.ARR.C/G	T3
	77614-83021	1	REMATE MOLD.TRAS.L/I	RR.MOLD.FINISH,L/H	FINIT.MOUL.ARR.C/G	T1,T2
44	09409-07306	8	CLIP EXTENSION	EXTENSION CLIP	CLIP EXTENSION	
45	09409-07310	4	CLIP FIJACION	FASTENING CLIP	CLIP FIXATION	
46	64250-70A00	1	EXTENSION LAT.CARRO.	BODY SIDE EXTENSION	EXTENSION LAT.CARRO.	T3
47	64650-70A00	1	EXTENS.LAT.CARRO.L/I	BODY S/EXTENSION,L/H	EXTENS.LAT.CARRO.C/G	T3
48	09139-06036	8	TORNILLO FIJACION	FASTENING SCREW	VIS FIXATION	T3
49	08316A16063	4	TUERCA FIJACION	FASTENING NUT	ECROU FIXATION	T3
50	77130-70A00-5WA	1	MOLDURA LAT.L/D	SIDE MOLDING,R/H	MOULURE LAT.C/D	T3
	77131-83022A	1	MOLDURA LAT.L/D	SIDE MOLDING,R/H	MOULURE LAT.C/D	
	77131-83022B	1	MOLDURA LAT.L/D	SIDE MOLDING,R/H	MOULURE LAT.C/D	
	77131-83022M	1	MOLDURA LAT.L/D	SIDE MOLDING,R/H	MOULURE LAT.C/D	
	77131-83022N	1	MOLDURA LAT.L/D	SIDE MOLDING,R/H	MOULURE LAT.C/D	
	77131-83022P	1	MOLDURA LAT.L/D	SIDE MOLDING,R/H	MOULURE LAT.C/D	
	77131-83022R	1	MOLDURA LAT.L/D	SIDE MOLDING,R/H	MOULURE LAT.C/D	
51	77140-70A00-5WA	1	MOLDURA LAT.L/I	SIDE MOLDING,L/H	MOULURE LAT.C/G	T3
	77141-83022A	1	MOLDURA LAT.L/I	SIDE MOLDING,L/H	MOULURE LAT.C/G	
	77141-83022B	1	MOLDURA LAT.L/I	SIDE MOLDING,L/H	MOULURE LAT.C/G	
	77141-83022M	1	MOLDURA LAT.L/I	SIDE MOLDING,L/H	MOULURE LAT.C/G	
	77141-83022N	1	MOLDURA LAT.L/I	SIDE MOLDING,L/H	MOULURE LAT.C/G	
	77141-83022P	1	MOLDURA LAT.L/I	SIDE MOLDING,L/H	MOULURE LAT.C/G	
	77141-83022R	1	MOLDURA LAT.L/I	SIDE MOLDING,L/H	MOULURE LAT.C/G	
52	09139-06058	6	TORNILLO	SCREW	VIS	T3
53	09409-07312	12	CLIP	CLIP	CLIP	
54	50029-00000	2	LAMINA CEGANTE	AUTO-ADHESIVE PLATE	PLAQUE ADHESIVE	

FIG.70

J-09

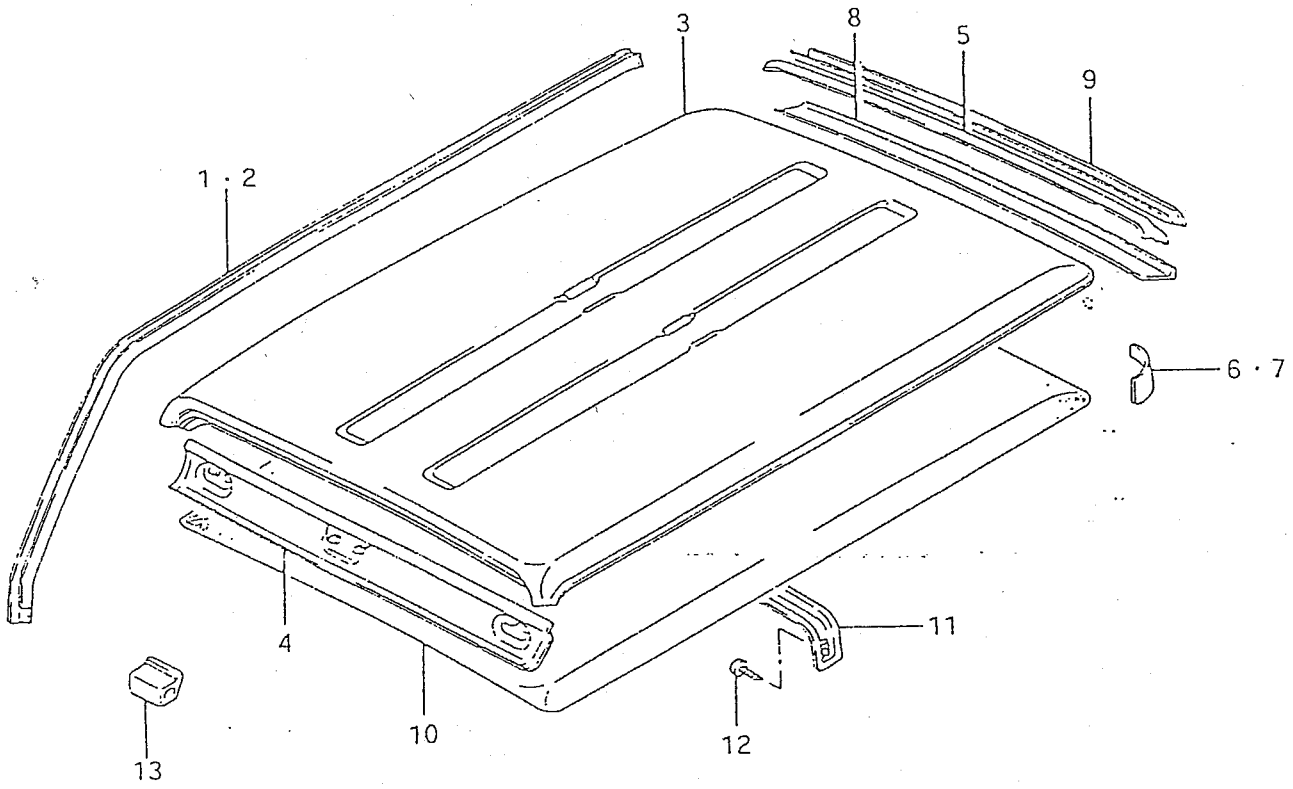

PUBLICACION N:A01116 GRUPO=CARROCERIA SUBGRUPO=J-09TECHO METALICO
EDICION N: 1 GROUP=BODY SUBGROUP=J-09METALLIC ROOF
GROUPE=CARROSSERIE SUBGROUPE=J-09TOIT METALLIQUE

N.FIG PLATE N.FIG	N.PIEZA PARTNUMBER N.PIECE	CAN QTY OUT	DENOMINACION	DESCRIPTION	DENOMINATION	OBSERVACIONES
1	64351-80101	1	PERFIL TECHO,L/D	ROOF PROFILE,R/H	PROFIL TOIT,C/D	
2	64751-80101	1	PERFIL TECHO,L/I	ROOF PROFILE,L/H	PROFIL TOIT,C/G	
3	65111-80103	1	PANEL TECHO	ROOF PANEL	PANNEAU TOIT	
4	65120-80101	1	PANEL INT.TECHO	ROOF INNER PANEL	PANNEAU INT.TOIT	
5	65130-80100	1	MARCO EXT.TRAS.TECHO	ROOF REAR OUT.FRAME	CADRE EXT.ARR.TOIT	
6	65134-80100	1	REFUERZO,L/D	REINFORCEMENT,R/H	RENFORT,C/D	
7	65135-80100	1	REFUERZO,L/I	REINFORCEMENT,L/H	RENFORT,C/G	
8	65141-80110	1	MARCO INTERIOR	INNER FRAME	CADRE INTERIEUR	
9	65241-80101	1	PERFIL TRAS.TECHO	ROOF REAR PROFILE	PROFIL ARR.TOIT	
10	78111-80141-4KW	1	FORRO PANEL TECHO	ROOF PANEL LINING	GARNITU.PANNEAU TOIT	
11	78141-80102-0DG	1	REFUERZO TECHO	ROOF REINFORCEMENT	RENFORT TOIT	
	78141-80102-19H	1	REFUERZO TECHO	ROOF REINFORCEMENT	RENFORT TOIT	
	78141-80102-1FG	1	REFUERZO TECHO	ROOF REINFORCEMENT	RENFORT TOIT	
	78141-80102-1FH	1	REFUERZO TECHO	ROOF REINFORCEMENT	RENFORT TOIT	
	78141-80102-26U	1	REFUERZO TECHO	ROOF REINFORCEMENT	RENFORT TOIT	
	78141-80102-37V	1	REFUERZO TECHO	ROOF REINFORCEMENT	RENFORT TOIT	
	78141-80102-38B	1	REFUERZO TECHO	ROOF REINFORCEMENT	RENFORT TOIT	
12	02142-06125	2	TORNILLO	SCREW	VIS	
13	78142A80100	1	TOPE	STOP	BUTEE	

FIG.71

J-10

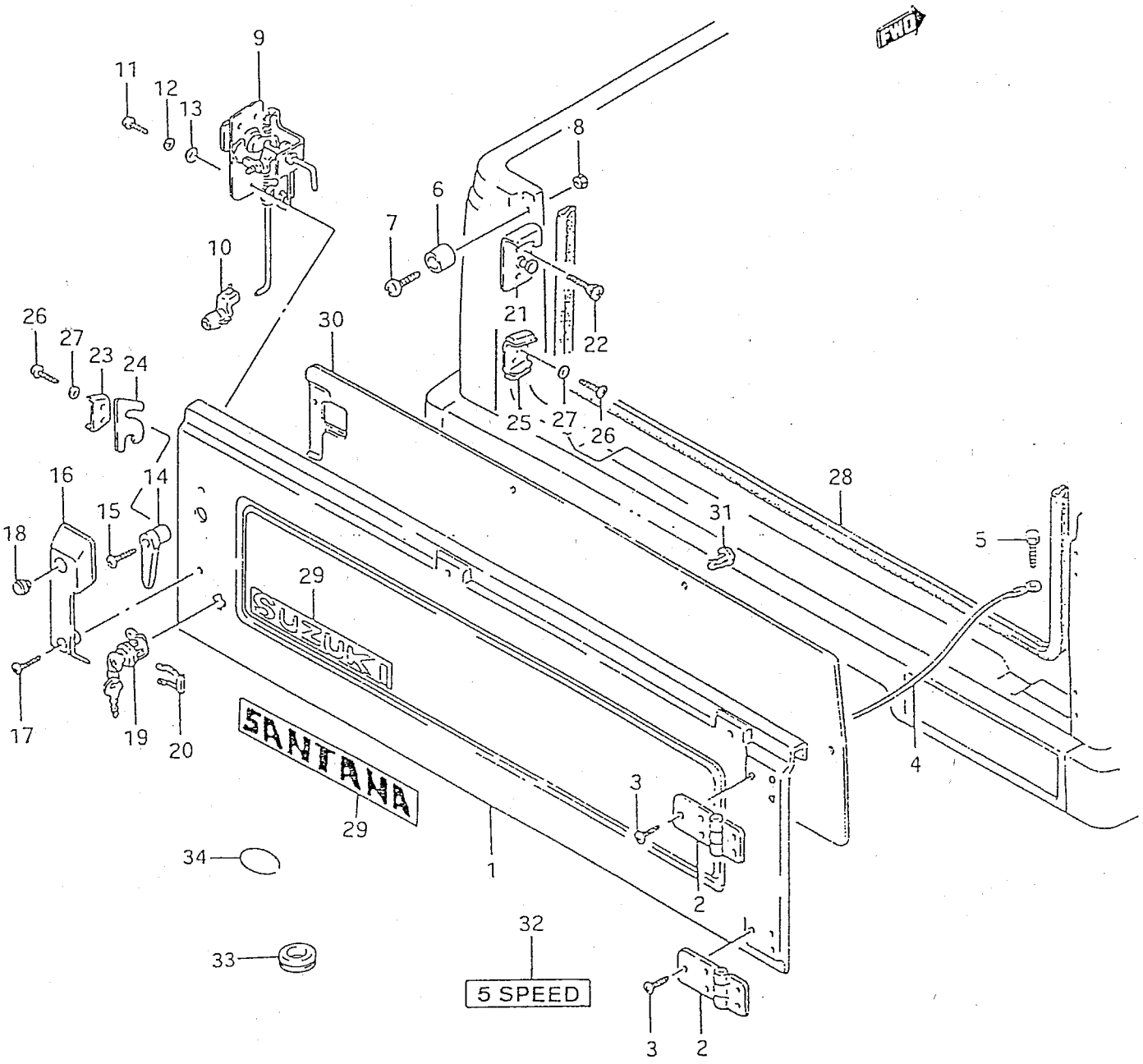

PUBLICACION N:A01116 GRUPO=CARROCERIA SUBGRUPO=J-10COMPUERTA 'J'
EDICION N: 1 GROUP=BODY SUBGROUP=J-10REAR DOOR 'J'
GROUPE=CARROSSERIE SUBGROUPE=J-10PORTE ARR.'J'

N.FIG PLATE N.FIG	N.PIEZA PARTNUMBER N.PIECE	CAN QTY OUT	DENOMINACION	DESCRIPTION	DENOMINATION	OBSERVACIONES
1	51427-00000	1	PANEL PUERTA TRAS.	REAR DOOR PANEL	PANNEAU PORTE ARR.	JH
	67700-80060	1	PANEL PUERTA TRAS.	REAR DOOR PANEL	PANNEAU PORTE ARR.	
2	67790-80031	2	CONJUNTO BISAGRA	HINGE ASSY	ENSEMBLE CHARNIERE	
3	09125-08002	10	TORNILLO	SCREW	VIS	
4	72850-80002	1	CABLE RETENCION	RETAINING CABLE	CABLE RETENUE	
5	09100-06075	2	TORNILLO	SCREW	VIS	
6	72875-80001	1	APOYO PUERTA	DOOR HOLDER	APPUI PORTE	
7	02112-06163	1	TORNILLO	SCREW	VIS	
8	08313B11063	1	TUERCA	NUT	ECROU	
9	82550-80082	1	CERRADURA PUERT.TRAS	REAR DOOR LOCK	FERMETURE PORTE ARR.	
10	09209-05016	1	PIEZA ACOPLAMIENTO	JOINT PART	PIECE ACCOUPLEMENT	
11	02112-06123	3	TORNILLO	SCREW	VIS	
12	08321A31066	3	ARANDELA MUELLE	SPRING WASHER	RONDELLE ELASTIQUE	
13	08322-21068	3	ARANDELA PLANA	FLAT WASHER	RONDELLE PLATE	
14	82591-80060	1	MANECILLA CIERRE	LOCK HANDLE	POIGNEE FERMETURE	'J'
15	02112-06125	1	TORNILLO	SCREW	VIS	
16	82592-80060	1	CUBIERTA MANECILLA	HANDLE COVER	COUVERCLE POIGNEE	
17	02112-06125	2	TORNILLO	SCREW	VIS	
18	09250-14006	1	TAPON	PLUG	BOUCHON	
19	51590-00000	1	C/CILINDRO LLAVE	KEY CYLINDER ASSY	ENS.CLE BARILLET	D 78034
	82270A80100	1	C/CILINDRO LLAVE	KEY CYLINDER ASSY	ENS.CLE BARILLET	H 78033
20	77161-80080	1	CLIP CERRADURA	LOCK CLIP	CLIP SERRURE	
21	77810-60021	1	CERRADERO PUERTA	DOOR LOCK	FERMETURE PORTE	
22	09126A08006	2	TORNILLO	SCREW	VIS	
	09163A08002	2	ARANDELA MUELLE	SPRING WASHER	RONDELLE ELASTIQUE	
23	78251-68201	1	TOPE	STOP	BUTEE	
24	77891-63100	2	CASQUILLO	BUSH	BAGUE	
25	78261-68201	1	TOPE PUERTA	DOOR STOP	BUTEE PORTE	
26	02112-06163	4	TORNILLO	SCREW	VIS	
27	08321A31063	4	ARANDELA MUELLE	SPRING WASHER	RONDELLE ELASTIQUE	
28	84681B80001	1	TIRA SELLANTE	WEATHERSTRIP	BANDE ETANCHE	

FIG.71.1 J-10.1

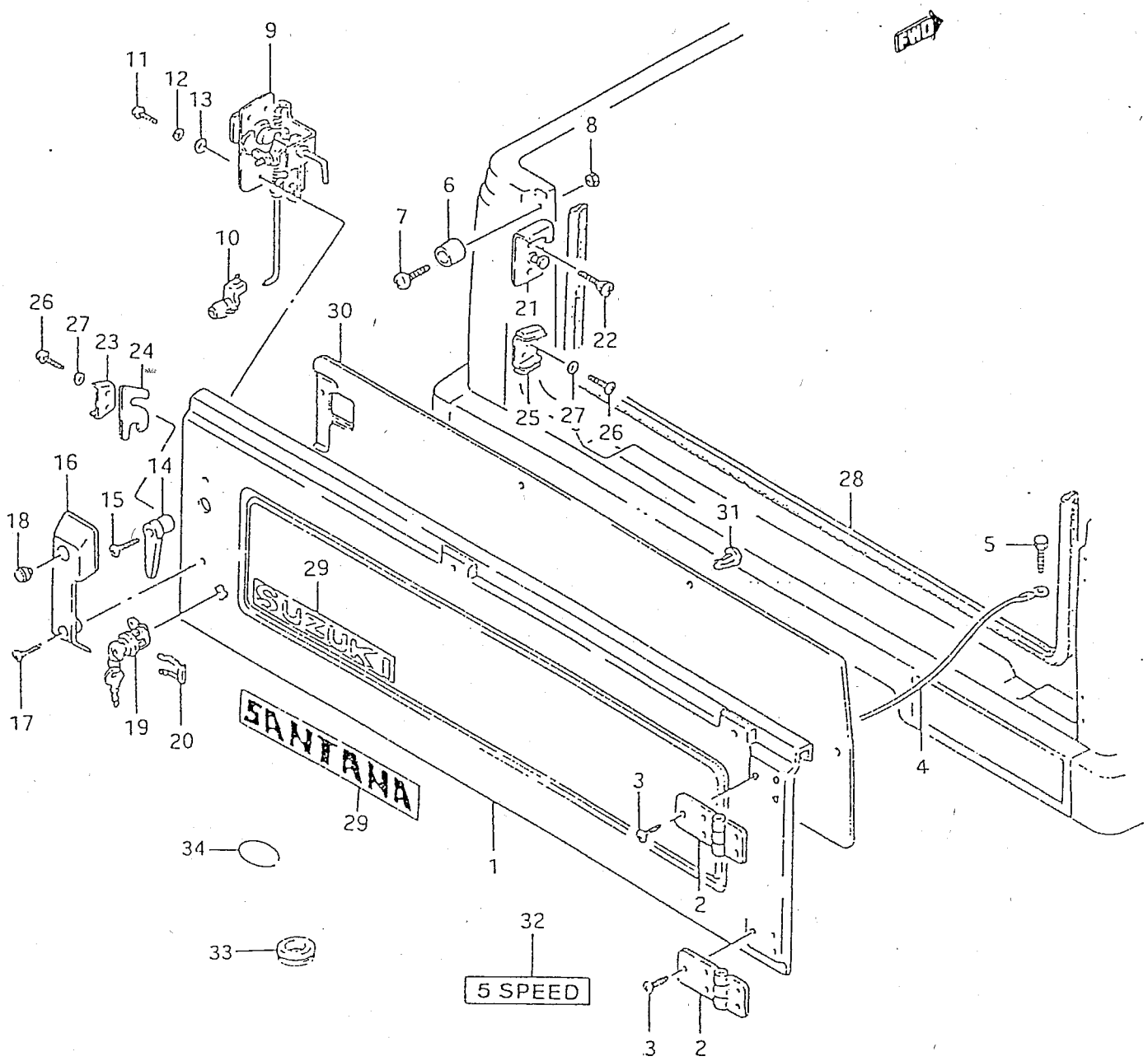

PUBLICACION N:A01116 GRUPO=CARROCERIA SUBGRUPO=J-10.1COMPUERTA 'J'
EDICION N: 1 GROUP=BODY SUBGROUP=J-10.1REAR DOOR 'J'
GROUPE=CARROSSERIE SUBGROUPE=J-10.1PORTE ARR.'J'

N.FIG PLATE N.FIG	N.PIEZA PARTNUMBER N.PIECE	CAN QTY OUT	DENOMINACION	DESCRIPTION	DENOMINATION	OBSERVACIONES
29	77813-50C00-21G	1	ANAGRAMA SUZUKI	SUZUKI ANAGRAM	ANAGRAMME SUZUKI	T2,T3
	77813C80010-21G	1	ANAGRAMA SANTANA	SANTANA ANAGRAM	ANAGRAMME SANTANA	E04
	77813D80010	1	ROTULO SANTANA,BLANC	SANTAN EMBLEM,WHITE	EMBLEM.SANTANA,BLANC	
	77813E80010	1	SUZUKI-SANTANA,NEGRO	SUZUKI-SANTANA,BLACK	SUZUKI-SANTANA,NOIR	H 95126
	77813F80010	1	SUZUKI-SANTANA,BLANC	SUZUKI-SANTANA,WHITE	SUZUKI-SANTANA,BLANC	H 95126
	77831A60A00	1	ANAGRAMA SUZUKI GRIS	GREY SUZUKI ANAGRAM	ANAGRAM.SUZUKI GRIS	T3
	77831B60A00	1	ANAGR.SUZUKI BLANCO	WHITE SUZUKI ANAGRAM	ANAGRAM.SUZUKI BLANC	T3
30	51794-00000-5PK	1	TAPICERIA 'JH'	TRIM 'JH'	GARNITURE 'JH'	
	52537-00000	1	TAPICERIA 'JH'	TRIM 'JH'	GARNITURE 'JH'	ALTERN.
	76140C83000-5PK	1	TAPICERIA	TRIM	GARNITURE	
31	09409B12301	9	CLIP	CLIP	CLIP	
	09409C12301	7	CLIP	CLIP	CLIP	JH
32	50227-00000	1	ANAGRAMA 5 VELOCIDAD	5 SPEED ANAGRAM	ANAGRAMME 5 VITESSES	H 99455
	77841-80001	1	ANAGRAMA 5 VELOCIDAD	5 SPEED ANAGRAM	ANAGRAMME 5 VITESSES	H 99455
33	51495-00000	1	ANILLO PASACABLES	GROMMET RING	ANNEAU PASSE-CABLES	
34	52181-00000	2	PELICULA ADHESIVA	ADHESIVE FILM	PELLICULE ADHESIVE	

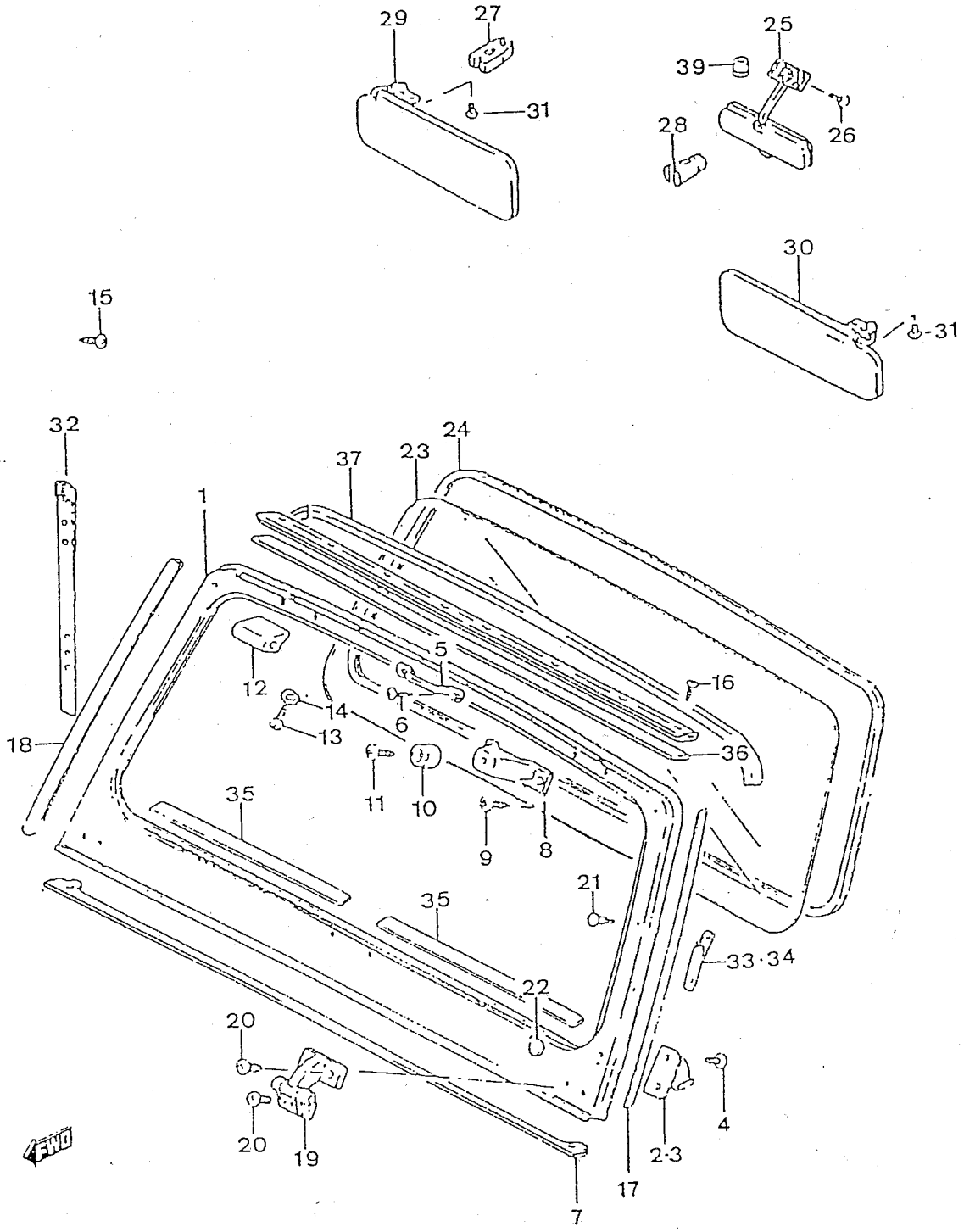
29
27
31
25
39
28
26
30
31
15
32
37
23
24
1
5
12
16
14
6
13
18
36
11
10
35
9
8
21
35
33·34
22
20
20
19
4
2·3
17
7

PUBLICACION N:A01116 GRUPO=CARROCERIA SUBGRUPO=J-11PARABRISAS 'J'
EDICION N: 1 GROUP=BODY SUBGROUP=J-11WINDSCREEN 'J'
GROUPE=CARROSSERIE SUBGROUPE=J-11PAREBRISES 'J'

N.FIG PLATE N.FIG	N.PIEZA PARTNUMBER N.PIECE	CAN QTY OUT	DENOMINACION	DESCRIPTION	DENOMINATION	OBSERVACIONES
1	59101-80030	1	C/ PARABRISAS	WINDSCREEN ASSY	ENS.PAREBRISES	
2	72411-80000	1	SOPORTE CIERRE,L/D	LOCK BRACKET,R/H	SUPPORT FERMETU.C/D	
3	72412-80000	1	SOPORTE CIERRE,L/I	LOCK BRACKET,L/H	SUPPORT FERMETU.C/G	
4	02142-06165	4	TORNILLO	SCREW	VIS	
5	72415-80000	1	GANCHO TOPE VENTANA	WINDOW STOP HOOK	CROCHET BUTEE FENETR	
6	02112-05103	2	TORNILLO	SCREW	VIS	
7	72413-80000	1	TIRA SELLANTE INT.	INNER WEATHERSTRIP	BANDE ETANCHE INT.	T3
	72413-80003	1	TIRA SELLANTE INT.	INNER WEATHERSTRIP	BANDE ETANCHE INT.	T1,T2
8	72414-80000-5PK	2	SOPORTE APOYO VENTAN	WINDOW REST BRACKET	SUPPORT APPUI FENETR	
9	03211-05163	4	TORNILLO	SCREW	VIS	
10	09320-06006	2	APOYO DELANTERO	FRONT REST	APPUI AVANT	
11	02112-05103	2	TORNILLO	SCREW	VIS	
12	78142A80100	1	APOYO GOMA,'V'	RUBBER REST, 'V'	APPUI CAOUTCHOUC,'V'	
13	02142-05167	1	TORNILLO	SCREW	VIS	
14	08322-21058	1	ARANDELA PLANA	FLAT WASHER	RONDELLE ELASTIQUE	
15	03141-06123	1	TORNILLO ANTENA	ANTENNA SCREW	VIS ANTENNE	
16	03111-05203	8	TORNILLO	SCREW	VIS	
17	84644A80001	2	SELLANTE LATERAL	SIDE SEALING	JOINT ETANCHE LAT.	
18	84645C80101	2	PERFIL PROTECTOR	PROTECTING PROFILE	PROFIL PROTECTEUR	
19	72420-80010-5PK	2	C/BISAGRA	HINGE ASSY	ENS.CHARNIERE	
20	02142-06165	6	TORNILLO	SCREW	VIS	T1
	02142A06165	6	TORNILLO	SCREW	VIS	T2,T3
21	09250-02001	2	TAPON AGUJERO ANTENA	ANTENNA HOLE PLUG	BOUCHON ORIF.ANTENNE	
22	09250-14003	1	TAPON AGUJERO ANTENA	ANTENNA HOLE PLUG	BOUCHON ORIF.ANTENNE	
23	84511-80122	1	CRISTAL PARABRISAS	WINDSCREEN GLASS	VITRE PAREBRISES	GREEN
	84511-80132	1	CRISTAL PARABRISAS	WINDSCREEN GLASS	VITRE PAREBRISES	NO COLOUR
	84511-80171	1	CRISTAL PARABRISAS	WINDSCREEN GLASS	VITRE PAREBRISES	NO COLOUR-ALTERN.
24	84611-70A00	1	GOMA PARABRISAS	WINDSCREEN RUBBER	CAOUTCHOUC FENETRE	
25	84703-80000	1	C/ESPEJO RETROVIS.	RR VIEW MIRROR ASSY	ENS.MIROIR-RETROVI.	
	84703A80000	1	C/ESPEJO RETROVIS.	RR VIEW MIRROR ASSY	ENS.MIROIR-RETROVI.	ALTERN.
26	02132-05205	2	TORNILLO	SCREW	VIS	ALTERN.
	02142-05128	2	TORNILLO	SCREW	VIS	
27	86169-79000	1	SOPORTE AMORTIG.'J'	DAMPER BRACKET,'J'	SUPPORT AMORTISS.'J'	
28	84781-80000	1	SOPORTE AMORTIG.'V'	DAMPER BRACKET,'V'	SUPPORT AMORTISS.'V'	

FIG.72.1 J-11.1

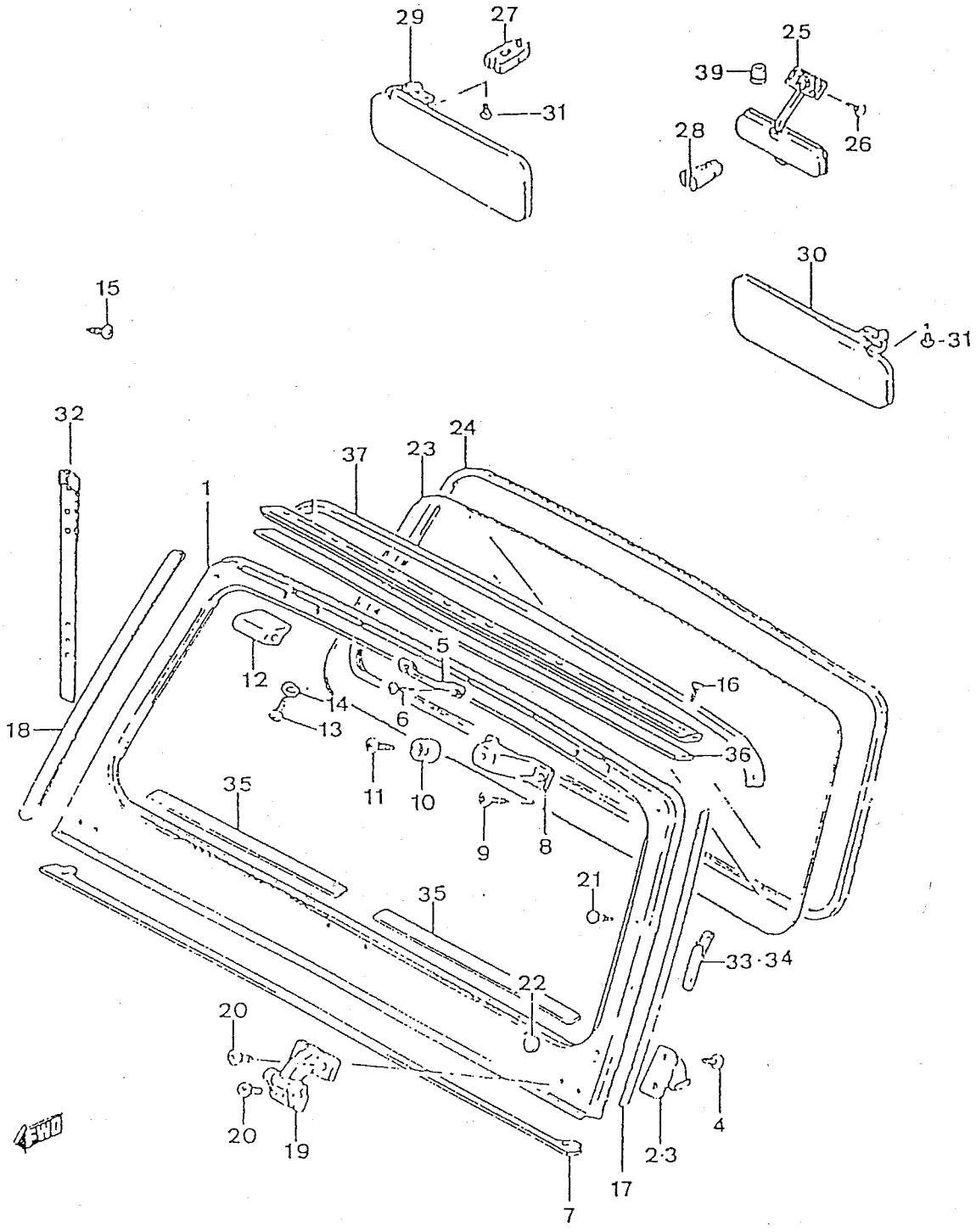
29
27
31
25
39
28
26
30
31
15
32
37
23
24
1
5
12
16
14
6
13
18
36
11
10
35
9
8
21
35
33·34
22
20
20
19
4
2·3
17
7

PUBLICACION N:A01116 GRUPO=CARROCERIA SUBGRUPO=J-11.1PARABRISAS 'J'
EDICION N: 1 GROUP=BODY SUBGROUP=J-11.1WINDSCREEN 'J'
GROUPE=CARROSSERIE SUBGROUPE=J-11.1PAREBRISES 'J'

N.FIG PLATE N.FIG	N.PIEZA PARTNUMBER N.PIECE	CAN QTY OUT	DENOMINACION	DESCRIPTION	DENOMINATION	OBSERVACIONES
29	84801-80011-46Z	1	PARASOL,L/D	SUNVISOR,R/H	PARESOLEIL,C/D	
30	84802-80011-46Z	1	PARASOL,L/I	SUNVISOR,L/H	PARESOLEIL,C/G	
31	02132-05105	4	TORNILLO	SCREW	VIS	
32	72450A80001	1	CORREA RETENCION	RETAINING BELT	COURROIE RETENUE	
33	84648-80011	1	EMBELLECEDOR,L/D	GARNISH,R/H	GARNITURE,C/D	
34	84649-80011	1	EMBELLECEDOR,L/I	GARNISH,L/H	GARNITURE,C/G	
35	72416-83000	2	BANDA INF.VENTANA	WINDOW LOWER STRIP	BANDE INF.FENETRE	
36	72419-83010	1	PERFIL SUP.TOLDO	CANVAS UPPER PROFILE	PROFIL SUP.BACHE	
37	72462-83001	1	PERFIL SUP.PARABRIS.	WINDSC.UPPER PROFILE	PROFIL SUP.PAREBRISE	
38	86124A63010	2	CASQUILLO FIJ.ESPEJO	MIRROR FIX.BUSH	BAGUE FIX.RETROV.	LINKED TO POS.25

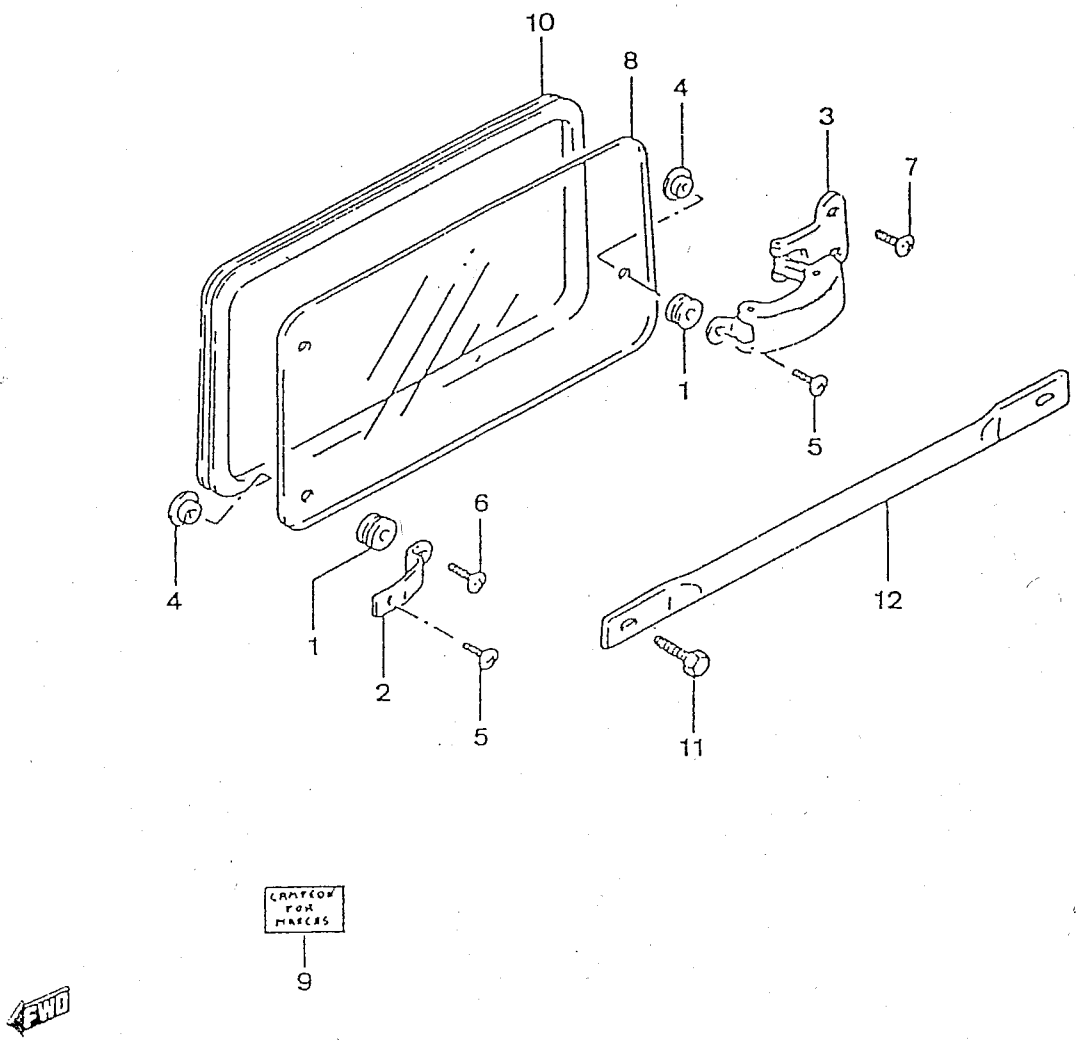
10
8
4
3
7
1
5
4
6
1
2
5
12
11
CANADA FOR MARCAS
9
FWD

PUBLICACION N:A01116 GRUPO=CARROCERIA SUBGRUPO=J-12VENTANA LATERAL
EDICION N: 1 GROUP=BODY SUBGROUP=J-12SIDE WINDOW
GROUPE=CARROSSERIE SUBGROUPE=J-12FENETRE LATERALE

N.FIG PLATE N.FIG	N.PIEZA PARTNUMBER N.PIECE	CAN QTY OUT	DENOMINACION	DESCRIPTION	DENOMINATION	OBSERVACIONES
1	69275-78200	6	CASQUILLO DE GOMA	RUBBER BUSH	BAGUE CAOUTCHOUC	
2	81411-80100	4	BISAGRA	HINGE	CHARNIERE	
3	81430-80102	2	CIERRE VENTANA	WINDOW LOCK	FERMETURE FENETRE	
4	81451-80101	6	TAPON VENTANA	WINDOW PLUG	BOUCHON FENETRE	MAY 90
	81451-80102	6	TAPON VENTANA	WINDOW PLUG	BOUCHON FENETRE	MAY 90
5	02142-05085	6	TORNILLO	SCREW	VIS	
6	02142-05168	4	TORNILLO	SCREW	VIS	
7	02142-05165	4	TORNILLO	SCREW	VIS	
8	84561-80112	2	CRISTAL LAT.VENTANA	WINDOW SIDE GLASS	VITRE LAT.FENETRE	NO COLOUR
	84561-80131	2	CRISTAL LAT.VENTANA	WINDOW SIDE GLASS	VITRE LAT.FENETRE	NO COLOUR-ALTERN.
	84561A80121	2	CRISTAL LAT.VENTANA	WINDOW SIDE GLASS	VITRE LAT.FENETRE	GREEN
9	52887-00000	1	EMBLEMA 'C/M'	EMBLEM 'C/M'	EMBLEME 'C/M'	
10	84621A80101	2	TIRA SELLANTE	WEATHERSTRIP	BANDE ETANCHE	T1
	84621B80101	2	TIRA SELLANTE	WEATHERSTRIP	BANDE ETANCHE	T2,T3
11	09125-08002	2	TORNILLO	SCREW	VIS	
12	81111-83000-0CE	2	BARRA PROTECCION	PROTECTING BAR	BARRE PROTECTION	

FIG.74

J-13

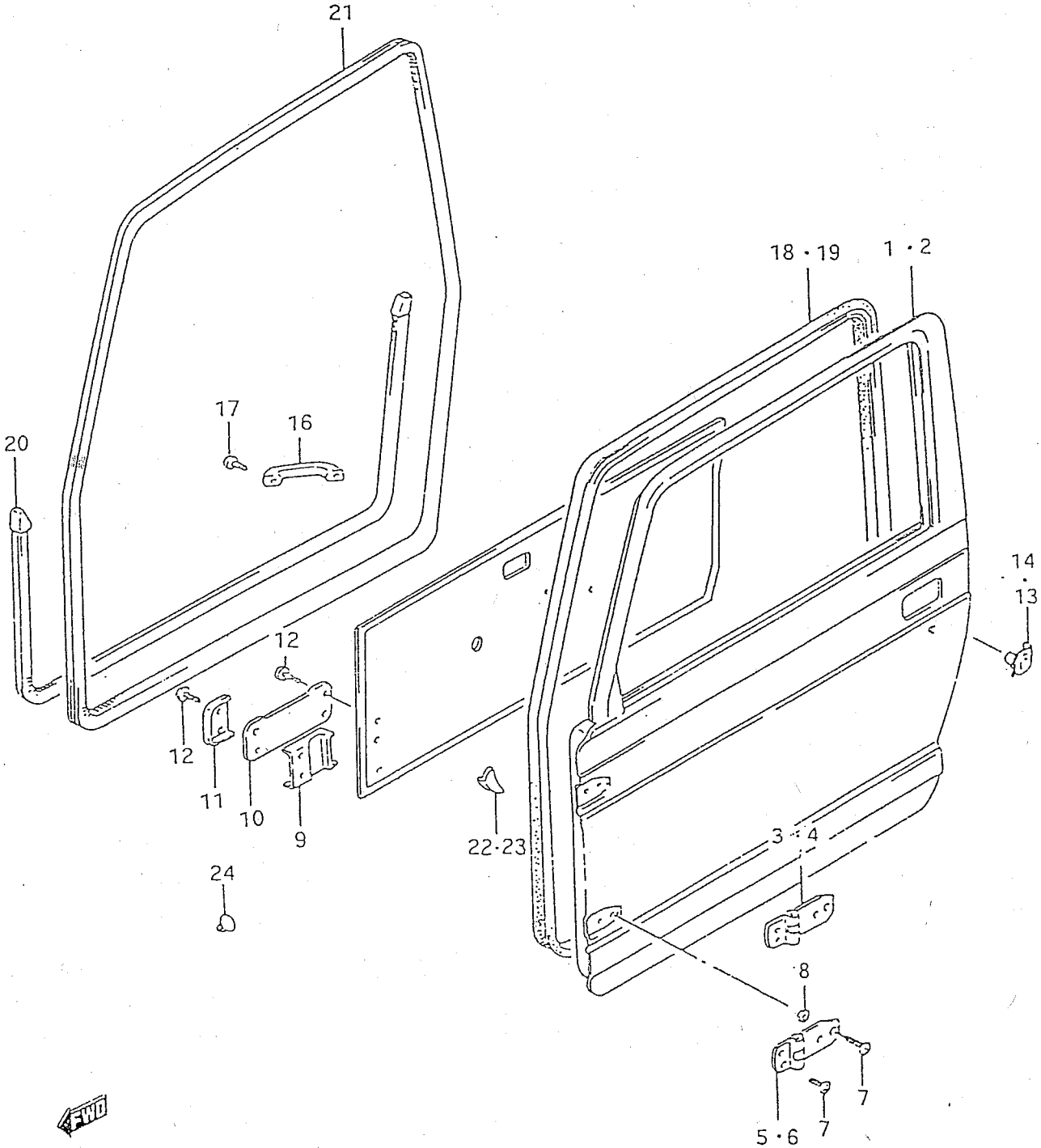

PUBLICACION N:A01116 GRUPO=CARROCERIA SUBGRUPO=J-13PUERTA DELANTERA
EDICION N: 1 GROUP=BODY SUBGROUP=J-13FRONT DOOR
GROUPE=CARROSSERIE SUBGROUPE=J-13PORTE AVANT

N.FIG PLATE N.FIG	N.PIEZA PARTNUMBER N.PIECE	CAN QTY OUT	DENOMINACION	DESCRIPTION	DENOMINATION	OBSERVACIONES
1	68001-80190	1	PUERTA DEL.L/D	FRONT DOOR,R/H	PORTE AVANT,C/D	
2	68002-80190	1	PUERTA DEL.L/I	FRONT DOOR,L/H	PORTE AVANT,C/G	
3	69310-80110	1	BISAGRA SUP.PUER.L/D	DOOR UPPER HINGE,R/H	CHARNIERE SUP.PTE,CD	
4	69340-80110	1	BISAGRA SUP.PUER.L/I	DOOR UPPER HINGE,L/H	CHARNIERE SUP.PTE,CG	
5	69320-80110	1	BISAGRA INF.PTA,L/D	DOOR LOWER HINGE,R/H	CHARNIERE INF.PTE,CD	
6	69350-80110	1	BISAGRA INF.PTA,L/I	DOOR LOWER HINGE,L/H	CHARNIERE INF.PTE,CG	
7	09125-08002	16	TORNILLO	SCREW	VIS	
8	09160-08086	8	ARANDELA	WASHER	RONDELLE	H 102872
9	76182-63101	2	CHAPA PROTECT.RETENC	RETAIN.PROTECT.SHEET	LAME PROTECT.RETENUE	
10	81811A80100	2	CORREA RETENC.PUERTA	DOOR RETAINING BELT	COURROIE RETENUE PTE	
11	76182-58002	4	CHAPA PROTECT.RETENC	RETAIN.PROTECT.SHEET	LAME PROTECT.RETENUE	
12	02132-05205	8	TORNILLO	SCREW	VIS	
13	82201-80101	1	C/PALAN.CIERR.PTA,LD	D.LOCK LEVER ASSY,RH	ENS.LEVIER FERM.P.CD	
14	82202-80101	1	C/PALAN.CIERR.PTA,LI	D.LOCK LEVER ASSY,LH	ENS.LEVIER FERM.P.CG	
15	02142-05103	3	TORN.CEGADO ESPEJ.LD	MIRR.BLIND SCREW,RH	VIS RETROVISEUR CD	NOT SHOWN
16	78271A58053	2	ASIDERO PTA.GRIS	GREY DOOR HANDLE	POIGNEE PORTE GRISE	
17	09125-06041	4	TORNILLO	SCREW	VIS	
18	84641-80121	1	TIRA SELLANTE,L/D	SEALING STRIP,R/H	BANDE ETANCHE,C/D	
19	84651-80121	1	TIRA SELLANTE,L/I	SEALING STRIP,L/H	BANDE ETANCHE,C/G	
20	84630-80000	2	JUNTA PUERTA,'J'	DOOR GASKET,'J'	JOINT PORTE,'J'	
21	84645A80101	2	JUNTA PUERTA,'V'	DOOR GASKET,'V'	JOINT PORTE,'V'	
	84645B80101	2	JUNTA PUERTA,'V'	DOOR GASKET,'V'	JOINT PORTE,'V'	ALTERN.
22	84652-80120	1	TIRA SELLANTE,L/I	SEAILING STREP,L/H	BANDE ETANCHE,C/G	'J'
23	84642-80120	1	TIRA SELLANTE,L/D	SEAILING STREP,R/H	BANDE ETANCHE,C/D	'J'
24	84644-80100	22	CLIP PERFIL SELLANTE	CLIP	CLIP	
	84644A80100	22	CLIP PERFIL SELLANTE	CLIP	CLIP	ALTERN.

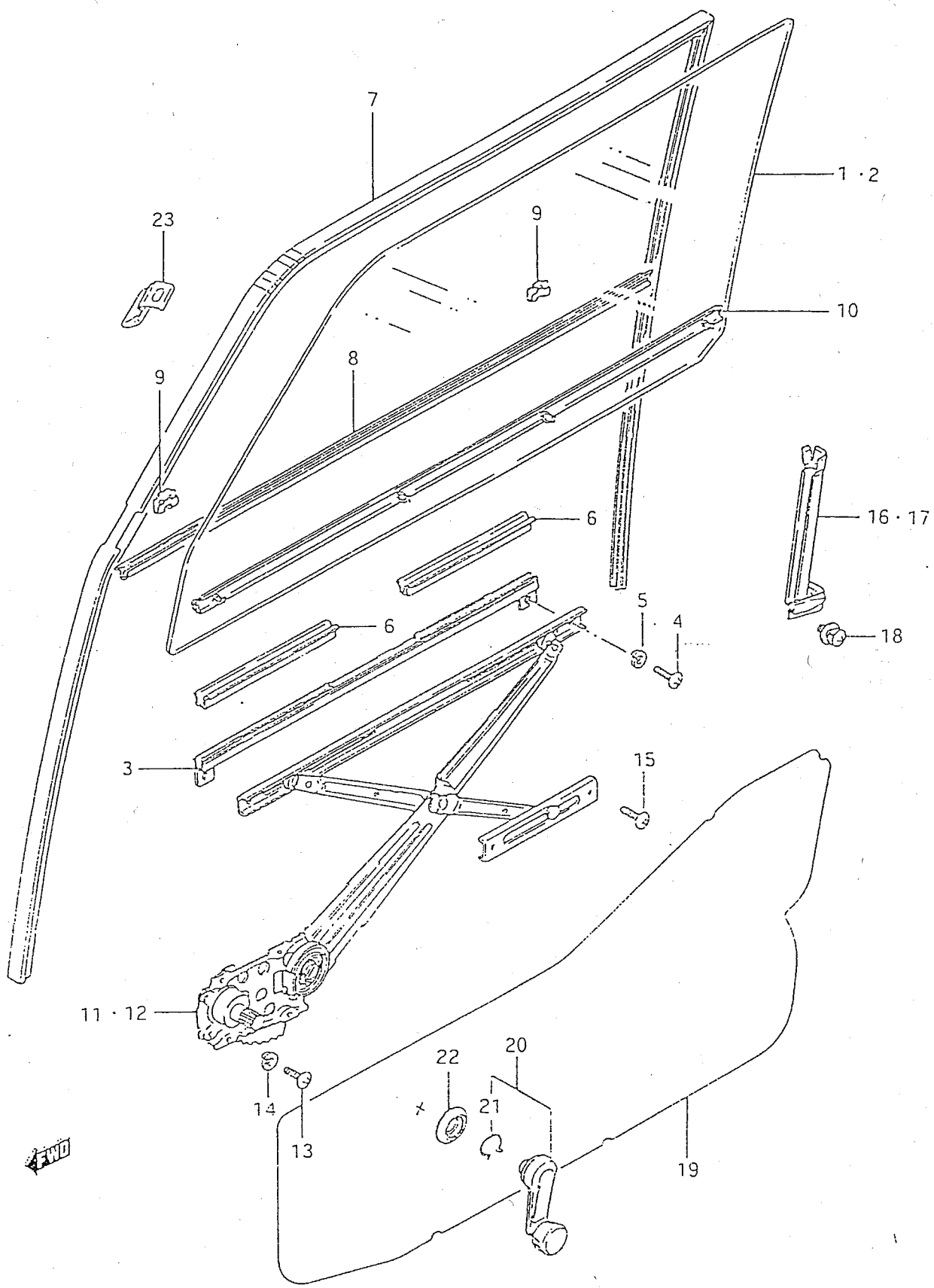
7
1 · 2
23
9
10
9
8
6
16 · 17
6
5
4
18
3
15
11 · 12
14
13
22
20
21
19
4WD

PUBLICACION N:A01116 GRUPO=CARROCERIA SUBGRUPO=J-14CRISTAL PTA DEL.
EDICION N: 1 GROUP=BODY SUBGROUP=J-14FRONT DOOR GLASS
GROUPE=CARROSSERIE SUBGROUPE=J-14VITRE PORTE AV.

N.FIG PLATE N.FIG	N.PIEZA PARTNUMBER N.PIECE	CAN QTY OUT	DENOMINACION	DESCRIPTION	DENOMINATION	OBSERVACIONES
1	84531-80112	1	CRISTAL PUERTA,L/D	DOOR GLASS,R/H	VITRE PORTE,C/D	NO COLOUR
	84531-80131	1	CRISTAL PUERTA,L/D	DOOR GLASS R/H	VITRE PORTE,C/D	NO COLOUR-ALTERN.
	84531A80121	1	CRISTAL PUERTA,L/D	DOOR GLASS,R/H	VITRE PORTE,C/D	GREEN
2	84536-80112	1	CRISTAL PUERTA,L/I	DOOR GLASS,L/H	VITRE PORTE,C/G	NO COLOUR
	84536-80131	1	CRISTAL PUERTA,L/I	DOOR GLASS L/H	VITRE PORTE,C/G	NO COLOUR-ALTERN.
	84536A80121	1	CRISTAL PUERTA,L/I	DOOR GLASS,L/H	VITRE PORTE,C/G	GREEN
3	78710-78000	2	PERFIL INT.CRISTAL	GLASS INNER PROFILE	PROFIL INT.VITRE	
4	02112-06086	4	TORNILLO	SCREW	VIS	
5	08321A31066	4	ARANDELA MUELLE	SPRING WASHER	RONDELLE ELASTIQUE	
6	78811A78400	4	PERFIL GOMA INT.	INNER RUBBER PROFILE	PROFIL INT.CAOUTCH.	
7	83661-83000	2	GUIA CRISTAL	GLASS GUIDE	GUIDE VITRE	
8	83811-80100	2	TIRA EXT.PUERTA	DOOR OUTER STRIP	BANDE EXT.PORTE	
9	78991-78001	12	CLIP	CLIP	CLIP	
10	83850-80100	2	TIRA INT.PUERTA	DOOR INNER STRIP	BANDE INT.PORTE	
11	83440-80100	1	BRAZO,L/I	ARM,L/H	BRAS,C/G	
	83440A80100	1	BRAZO,L/I	ARM,L/H	BRAS,C/G	ALTERN.
12	83410-80100	1	BRAZO,L/D	ARM,R/H	BRAS,C/D	
	83410A80100	1	BRAZO,L/D	ARM,R/H	BRAS,C/D	ALTERN.
13	02112-06086	8	TORNILLO	SCREW	VIS	
14	08321A31066	8	ARANDELA	WASHER	RONDELLE	
15	02142-06106	4	TORNILLO	SCREW	VIS	
16	81730-80101	1	GUIA POST.PUERTA,L/D	DOOR REAR GUIDE,R/H	GUIDE ARR.PORTE.C/D	
17	81740-80101	1	GUIA POST.PUERTA,L/I	DOOR REAR GUIDE,L/H	GUIDE ARR.PORTE,C/G	
18	02112-06126	2	TORNILLO	SCREW	VIS	
	08321A31066	2	ARANDELA MUELLE	SPRING WASHER	RONDELLE ELASTIQUE	
	08322-21066	2	ARANDELA PLANA	FLAT WASHER	RONDELLE PLATE	
19	83911-80100	2	CUBIERTA PUERTA	DOOR COVER	COUVERCLE PORTE	
20	82960A82100-5ES	2	PALANCA	LEVER	LEVIER	
21	78463-78000	2	CIRCLIP	CIRCLIP	CIRCLIP	
22	78472A78000	2	EMBELLECEDOR	GARNISH	ENJOLIVEUR	R 96618
	82972-82100-5ES	2	EMBELLECEDOR	GARNISH	ENJOLIVEUR	D 96619
23	78861-78400	2	GUIA CRISTAL PUERTA	DOOR GLASS GUIDE	GUIDE VITRE PORTE	

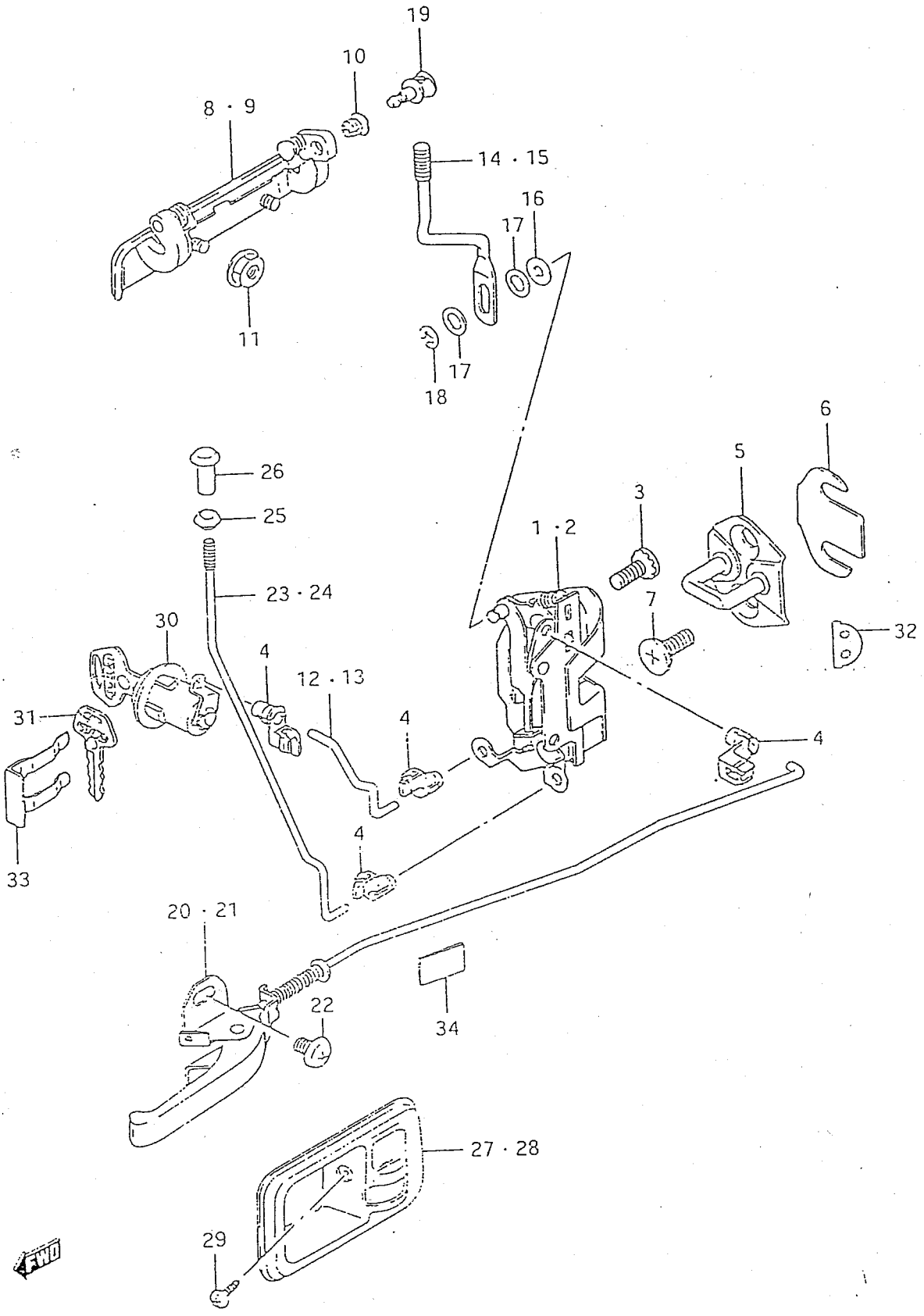
19
10
8 · 9
14 · 15
16
17
11
17
18
6
26
5
25
3
1 · 2
23 · 24
7
32
30
4
12 · 13
4
31
4
4
33
20 · 21
22
34
27 · 28
29
4WD

PUBLICACION N:A01116 GRUPO=CARROCERIA SUBGRUPO=J-15CERRAD.PTA DEL.
EDICION N: 1 GROUP=BODY SUBGROUP=J-15FRONT DOOR LOCK
GROUPE=CARROSSERIE SUBGROUPE=J-15SERRURE PTE AV.

N.FIG PLATE N.FIG	N.PIEZA PARTNUMBER N.PIECE	CAN QTY OUT	DENOMINACION	DESCRIPTION	DENOMINATION	OBSERVACIONES
1	82201-80101	1	CERRADURA PUERTA,L/D	DOOR LOCK,C/D	SERRURE PORTE,C/D	
2	82202-80101	1	CERRADURA PUERTA,L/I	DOOR LOCK,L/H	SERRURE PORTE,C/G	
3	02132-06163	6	TORNILLO	SCREW	VIS	
	08323-31063	6	ARANDELA ESTRELLA	STAR WASHER	RONDELLE EN ETOILE	
4	09209-05016	8	PIEZA ACOPLAMIENTO	COUPLING PART	PIECE ACCOUPLEMENT	
5	82610A85000	2	CERRADERO	LOCK	FERMETURE	
6	82681-80100	2	DISTANCIADOR	SPACER	SEPARATEUR	
7	09126A08005	4	TORNILLO	SCREW	VIS	
	09163A08002	4	ARANDELA MUELLE	SPRING WASHER	RONDELLE ELASTIQUE	
8	82810A80102	1	MANECILLA,L/D	HANDLE,R/H	POIGNEE,C/D	
9	82820A80102	1	MANECILLA,L/I	HANDLE,L/H	POIGNEE,C/G	
10	82891A80100	3	CIERRE HEMBRA TUERCA	NUT FEMALE LOCK	FERMETURE FEMELLE EC	
11	08316-26066	6/4	TUERCA	NUT	ECROU	'V'/'J'
12	82291-80100	1	VARILLA,L/D	ROD,R/H	TIGE,C/D	
13	82292-80100	1	VARILLA,L/I	ROD,L/H	TIGE,C/G	
14	83211-80100	1	VARILLA MANDO,L/D	CONTROL ROD,R/H	TIGE CONTROLE,C/D	
15	83212-80100	1	VARILLA MANDO,L/I	CONTROL ROD,L/H	TIGE CONTROLE,C/G	
16	09161-04008	4/2	ARANDELA	WASHER	RONDELLE	'V'/'J'
17	09161A06008	4	ARANDELA	WASHER	RONDELLE	
18	08332A11058	2	ANILLO RETENCION	RETAINING RING	ANNEAU RETENUE	
19	77716-79000	2	TUERCA AJUSTE	ADJUSTING NUT	ECROU D'AJUSTAGE	
20	83110A80100	1	PALANCA GRIS,L/D	GREY LEVER,R/H	LEVIER GRIS,C/D	
21	83130A80100	1	PALANCA GRIS,L/I	GREY LEVER,L/H	LEVIER GRIS,C/G	
22	02142-06106	4	TORNILLO	SCREW	VIS	
23	83241-80100	1	VARILLA CONEXION,L/D	LINK ROD,R/H	TIGE CONNECTION,C/D	
24	83242-80100	1	VARILLA CONEXION,L/I	LINK ROD,L/H	TIGE CONNECTION,C/G	
25	78242B61000	2	EMBELLECEDOR GRIS	GREY GARNISH	ENJOLIVEUR GRIS	
26	78241A60002	2	POMO INT.GRIS	GREY INNER KNOB	BOUTON INT.GRIS	
27	78471A79000	1	EMBELLECEDOR GRIS,LD	GREY GARNISH,R/H	ENJOLIVEUR GRIS,C/D	
28	78481A79000	1	EMBELLECEDOR GRIS,LI	GREY GARNISH,L/H	ENJOLIVEUR GRIS,L/H	
29	03141-04085	2	TORNILLO	SCREW	VIS	
30	51590-00000	2	CERRAD.PTA.TRA.LD-LI	FR.DOOR LOCK,RH-LH	CERRU.PORTE AV.CD-CG	
31	00000A00689	1	LLAVE EN BRUTO	BLANK KEY	CLE BRUTE	
32	50104-00000	2	JUNTA CERRADERO	LOCK GASKET	JOINT FERMETURE	
33	77461-78000	2	CLIP BOMBILLO	CYLINDER CLIP	CLIP BARILLET	
34	77591-75000	2	RELLENO VARILLA	ROD BACK-PACKING	GARNISSAGE TIGE	

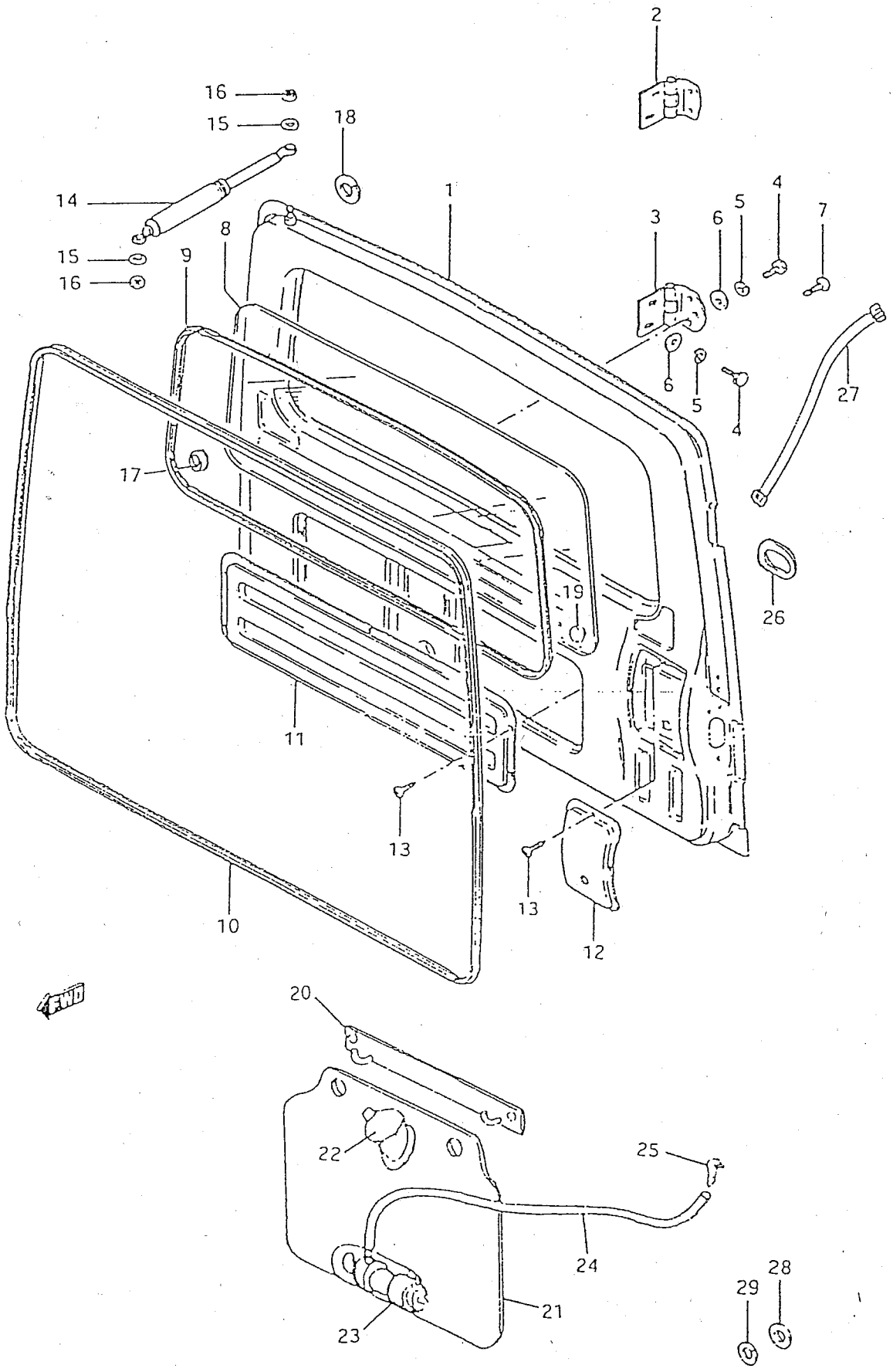
2
16
15
18
14
1
3
6
5
4
7
15
16
9
8
6
5
4
27
17
26
19
11
13
13
10
12
4WD
20
22
25
24
28
29
21
23

PUBLICACION N:A01116 GRUPO=CARROCERIA SUBGRUPO=J-16PUERTA TRAS.'V'
EDICION N: 1 GROUP=BODY SUBGROUP=J-16REAR DOOR 'V'
GROUPE=CARROSSERIE SUBGROUPE=J-16PORTE ARR.'V'

N.FIG PLATE N.FIG	N.PIEZA PARTNUMBER N.PIECE	CAN QTY OUT	DENOMINACION	DESCRIPTION	DENOMINATION	OBSERVACIONES
1	69100-83511	1	C/PANEL PUERTA TRAS.	REAR DOOR PANEL ASSY	ENS.PANNEAU PORT.ARR	
2	69510-80110	1	C/BISAGR.SUP.PTA TRA	RR DOOR UP.HINGE AS.	ENS.CHARN.SUP.PTE AR	
3	69520-80110	1	C/BISAGR.INF.PTA TRA	RR DOOR LOW.HINGE AS	ENS.CHARN.INF.PTE AR	
4	09100-08167	4	TORNILLO	SCREW	VIS	
5	08321B31086	4	ARANDELA MUELLE	SPRING WASHER	RONDELLE ELASTIQUE	
6	08322-21086	4	ARANDELA PLANA	FLAT WASHER	RONDELLE PLATE	
7	09125-08002	5	TORNILLO BISAGRA	HINGE SCREW	VIS CHARNIERE	
8	84571-80132	1	CRISTAL S/L.T.	GLASS NO L.T.	VITRE S/L.T.	NO COLOUR
	84571-80171	1	CRISTAL S/L.T.	GLASS NO L.T.	VITRE S/L.T.	NO COLOUR-ALTERN.
	84571A80112	1	CRISTAL S/L.T.	GLASS NO L.T.	VITRE S/L.T.	GREEN
9	84623A80100	1	PERFIL DE GOMA	RUBBER PROFILE	PROFIL CAOUTCHOUC	
10	84681A80100	1	PERFIL DE GOMA	RUBBER PROFILE	PROFIL CAOUTCHOUC	T1
	84681B80100	1	PERFIL DE GOMA	RUBBER PROFILE	PROFIL CAOUTCHOUC	T2,T3
11	83771-80100-0DG	1	TAPA AGUJERO PTA	DOOR HOLE COVER	COUVERCL.ORIF.PORTE	
	83771-80100-19H	1	TAPA AGUJERO PTA	DOOR HOLE COVER	COUVERCL.ORIF.PORTE	
	83771-80100-1FG	1	TAPA AGUJERO PTA	DOOR HOLE COVER	COUVERCL.ORIF.PORTE	
	83771-80100-1FH	1	TAPA AGUJERO PTA	DOOR HOLE COVER	COUVERCL.ORIF.PORTE	
	83771-80100-26U	1	TAPA AGUJERO PTA	DOOR HOLE COVER	COUVERCL.ORIF.PORTE	
	83771-80100-37V	1	TAPA AGUJERO PTA	DOOR HOLE COVER	COUVERCL.ORIF.PORTE	
	83771-80100-38B	1	TAPA AGUJERO PTA	DOOR HOLE COVER	COUVERCL.ORIF.PORTE	
12	83772-80100	1	TAPA AGUJERO PESTILL	LATCH HOLE COVER	COUVERCL.ORIF.VERROU	
13	03141-05128	12	TORNILLO	SCREW	VIS	
14	81860A80100	1	AMORTIGUADOR	DAMPER	AMORTISSEUR	
15	09160-06107	2	ARANDELA	WASHER	RONDELLE	
16	08310-11063	2	TUERCA	NUT	ECROU	
17	78372-00000	1	LUNETA TERMICA	HEATED BACK-LIGHT	LUNETTE THERMIQUE	
18	81860B80100	1	ARANDELA TOPE	STOP WASHER	RONDELLE D'ARRET	
19	09250-40002	2	TAPON	PLUG	BOUCHON	
20	50044-00000	1	PLACA SOPORTE	BRACKET PLATE	PLAQUE SUPPORT	
21	35011-00000	1	DEPOSITO	TANK	RESERVOIR	
22	00000A00293	1	TAPON	PLUG	BOUCHON	
23	00000A00294	1	BOMBA	PUMP	POMPE	
24	35020-00000	1	TUBO LAVAPARABRISAS	SCREENWASHER HOSE	TUYAU LAVE-VITRE	
25	35013-00000	1	DIFUSOR	JET	GICLEUR	
	35073-00000	1	DIFUSOR	JET	GICLEUR	ALTERN.
26	51495-00000	1	PASACABLES	GROMMET	PASSE-CABLES	
27	35151-00000	1	CABLEADO LUNETA	HEAT.B.-LIGHT WIRING	FAISCEAU LUNETTE	
28	02004-00000	1	ARANDELA CAUCHO	RUBBER WASHER	RONDELLE CAOUTCHOUC	
29	08322-11086	1	ARANDELA PLANA	FLAT WASHER	RONDELLE PLATE	

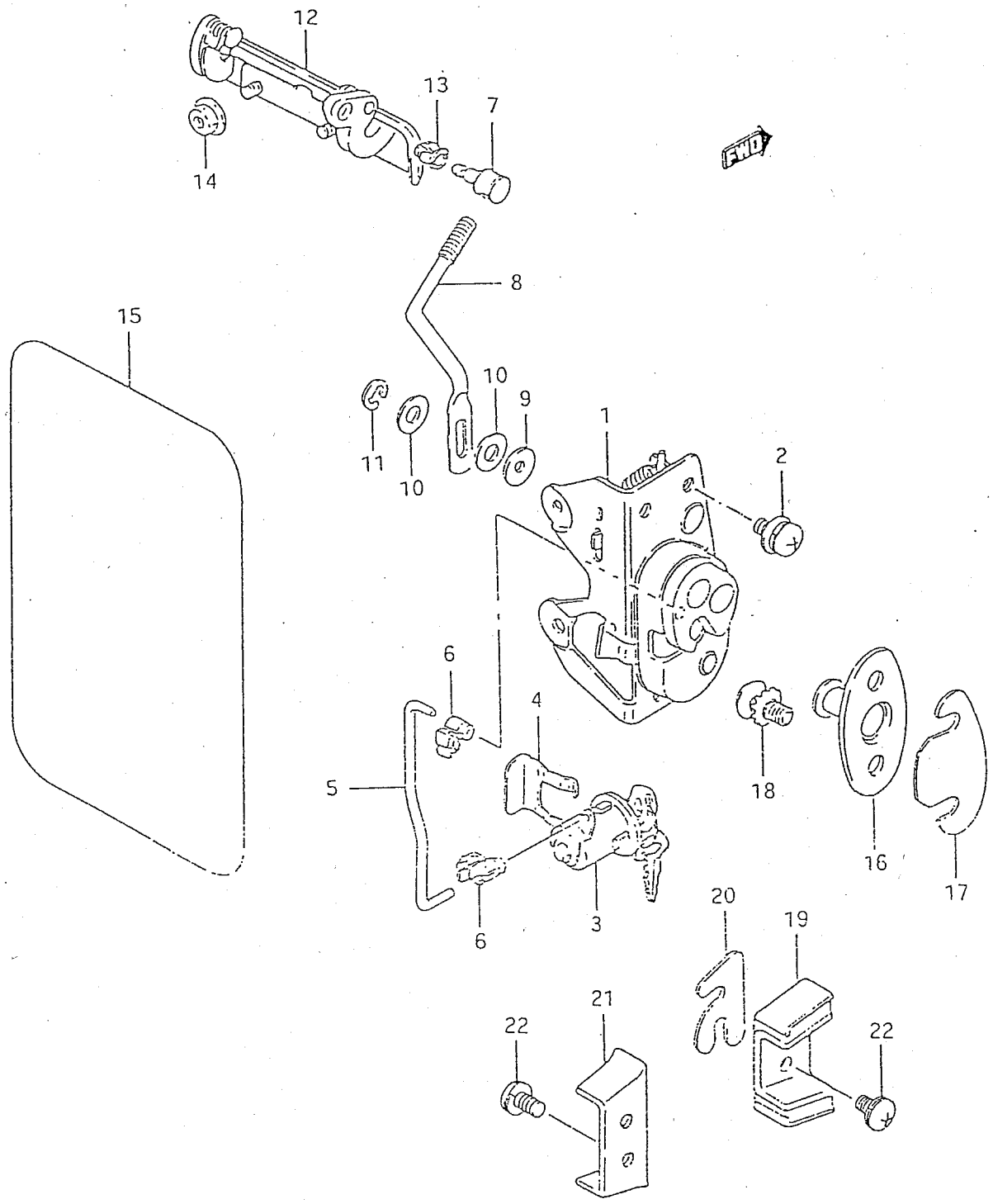
12
13
7
14
FWD
8
15
10
9
11
10
1
2
6
4
5
18
16
17
6
3
20
19
21
22
22

PUBLICACION N:A01116 GRUPO=CARROCERIA SUBGRUPO=J-17CERRAD.PTA TRAS.
EDICION N: 1 GROUP=BODY SUBGROUP=J-17REAR DOOR LOCK
GROUPE=CARROSSERIE SUBGROUPE=J-17SERRURE PTE ARR.

N.FIG PLATE N.FIG	N.PIEZA PARTNUMBER N.PIECE	CAN QTY OUT	DENOMINACION	DESCRIPTION	DENOMINATION	OBSERVACIONES
1	82530-80100	1	C/CERRADURA	LOCK ASSY	ENS.SERRURE	
2	02112-06123	3	TORNILLO	SCREW	VIS	
	08321A31063	3	ARANDELA MUELLE	SPRING WASHER	RONDELLE ELASTIQUE	
	08322-21068	3	ARANDELA PLANA	FLAT WASHER	RONDELLE PLATE	
3	51590-00000	1	C/CILINDRO-LLAVE	CYLINDER-KEY ASSY	ENS.BARILLET-CLE	D 81094
	82270A80100	1	C/CILINDRO-LLAVE	CYLINDER-KEY ASSY	ENS.BARILLET-CLE	H 81093
4	77461-78000	1	CLIP BOMBILLO CERRA.	LOCK CYLINDER CLIP	CLIP BARILLET SERR.	
5	82581-80100	1	VARILLA CONTROL	CONTROL ROD	TIGE CONTROLE	
6	09209-05016	2	PIEZA ACOPLAMIENTO	JOINT PART	PIECE ACCOUPLEMENT	
7	77716-79000	1	TUERCA DE AJUSTE	ADJUSTING NUT	ECROU D'AJUSTAGE	
8	83231-80100	1	VARILLA	ROD	TIGE	
9	09161-04008	1	ARANDELA	WASHER	RONDELLE	
10	09161A06008	2	ARANDELA	WASHER	RONDELLE	
11	08332A11058	1	ANILLO	RING	ANNEAU	
12	82810A80102	1	MANECILLA EXTERIOR	OUTER HANDLE	POIGNEE EXTERICR	
13	82891A80100	2	CIERRE	LOCK	FERMETURE	
14	08316-26066	6	TUERCA	NUT	ECROU	
15	83912-80100	1	CUBIERTA SELLANTE	SEALING COVER	COUVERCLE ETANCHE	
16	78110-79000	1	C/CERRADERO	LOCK ASSY	ENS.FERMETURE	
17	78199-79000	2	DISTANCIADOR	SPACER	SEPARATEUR	
18	09126A08006	2	TORNILLO	SCREW	VIS	
	09163A08002	2	ARANDELA GROWER	GROWER WASHER	RONDELLE WASHER	
19	78251-68201	1	TOPE MACHO	MALE STOP	BUTEE MALE	
20	77891-63100	2	DISTANCIADOR	SPACER	SEPARATEUR	
21	78261-68201	1	TOPE HEMBRA	FEMALE STOP	BUTEE FEMELLE	
22	02112-06163	4	TORNILLO	SCREW	VIS	
	08321A31063	4	ARANDELA MUELLE	SPRING WASHER	RONDELLE ELASTIQUE	

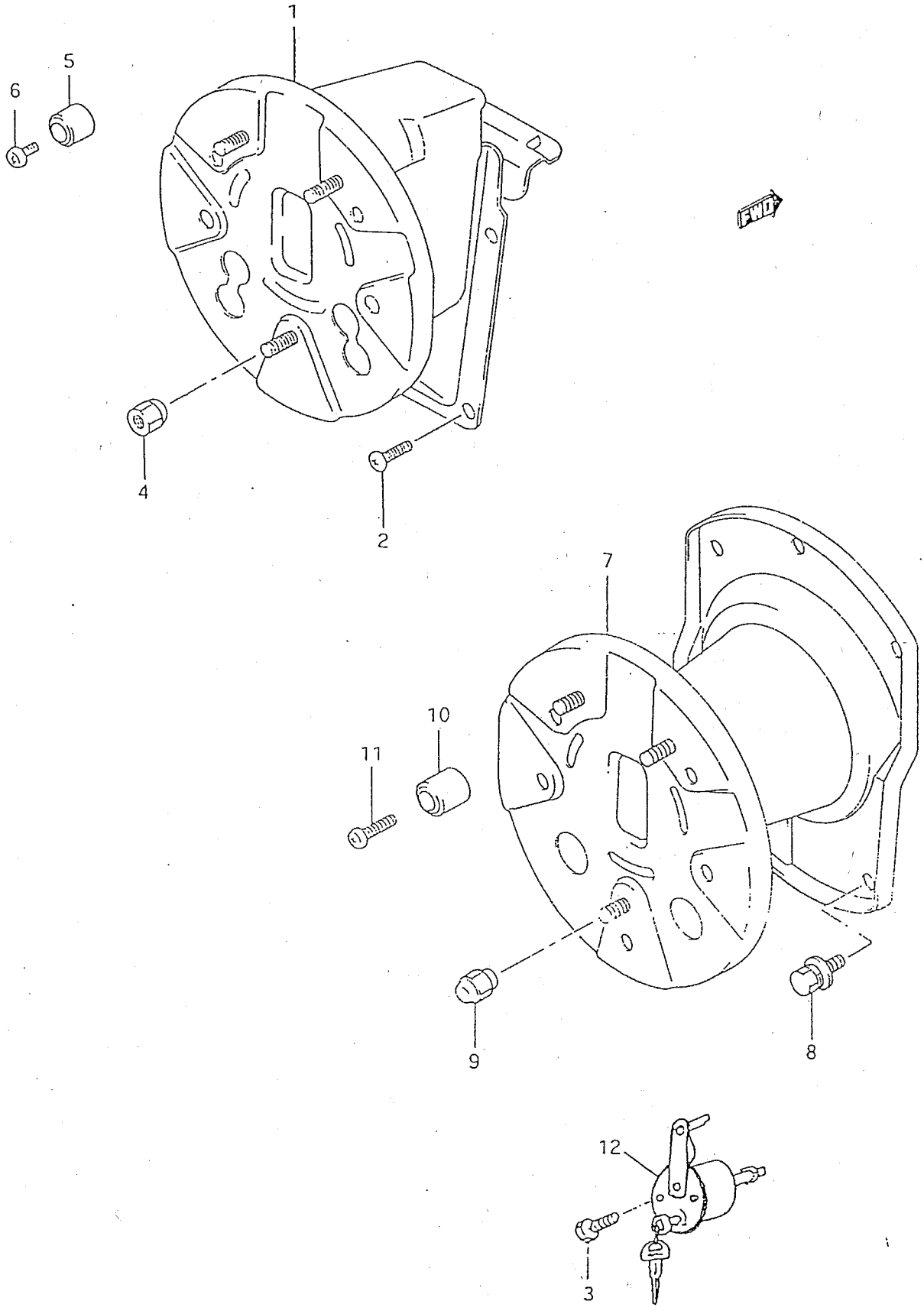
1
5
6
FWD
4
2
7
10
11
9
8
12
3

PUBLICACION N:A01116 GRUPO=CARROCERIA SUBGRUPO=J-18SOPORTE RUED.REP
EDICION N: 1 GROUP=BODY SUBGROUP=J-18SP.WHEEL BRACKET
GROUPE=CARROSSERIE SUBGROUPE=J-18SUPPORT ROUE SEC

N.FIG PLATE N.FIG	N.PIEZA PARTNUMBER N.PIECE	CAN QTY OUT	DENOMINACION	DESCRIPTION	DENOMINATION	OBSERVACIONES
1	52223-00000	1	C/SOP.RUEDA REP.'J'	SP.WHEEL BRACK.A/,J	ENS.SUPP.ROUE SEC.J	
2	09125-08002	6	TORNILLO	SCREW	VIS	
3	00000A00365	2	TORNILLO SEGURIDAD	SAFETY SCREW	VIS DE SURETE	
4	09159A12009	3	TUERCA	NUT	ECROU	
5	09320-06006	3	APOYO RUEDA	WHEEL REST	APPUI ROUE	
6	02112-06163	3	TORNILLO	SCREW	VIS	
7	52204-00000	1	C/SOP.RUEDA REP.'V'	SP.WHEEL BRACK.A/,V	ENS.SUPP.ROUE SEC.V	E53
	52813-00000	1	C/SOP.RUEDA REP.'V'	SP.WHEEL BRACK.A/,V	ENS.SUPP.ROUE SEC.V	E18
8	01104-10203	5	TORNILLO	SCREW	VIS	
	08321B31103	5	ARANDELA MUELLE	SPRING WASHER	RONDELLE ELASTIQUE	
	08322-11103	5	ARANDELA PLANA	FLAT WASHER	RONDELLE PLATE	
9	09159A12009	3	TUERCA RUEDA	WHEEL NUT	ECROU ROUE	
10	09320A06014	3	APOYO GOMA	RUBBER REST	APPUI CAOUTCEOUC	
	09320B06014	3	APOYO GOMA	RUBBER REST	APPUI CAOUTCHOUC	ALTERN.
11	02112-06166	3	TORNILLO	SCREW	VIS	
12	50670-00000	1	ANTI-ROBO RUEDA	WHEEL ANTI-THEFT DEV	ANTI-VOL ROUE	H 81093
	51600-00000	1	ANTI-ROBO RUEDA	WHEEL ANTI-THEFT DEV	ANTI-VOL ROUE	D 81094

FIG.80

J-19

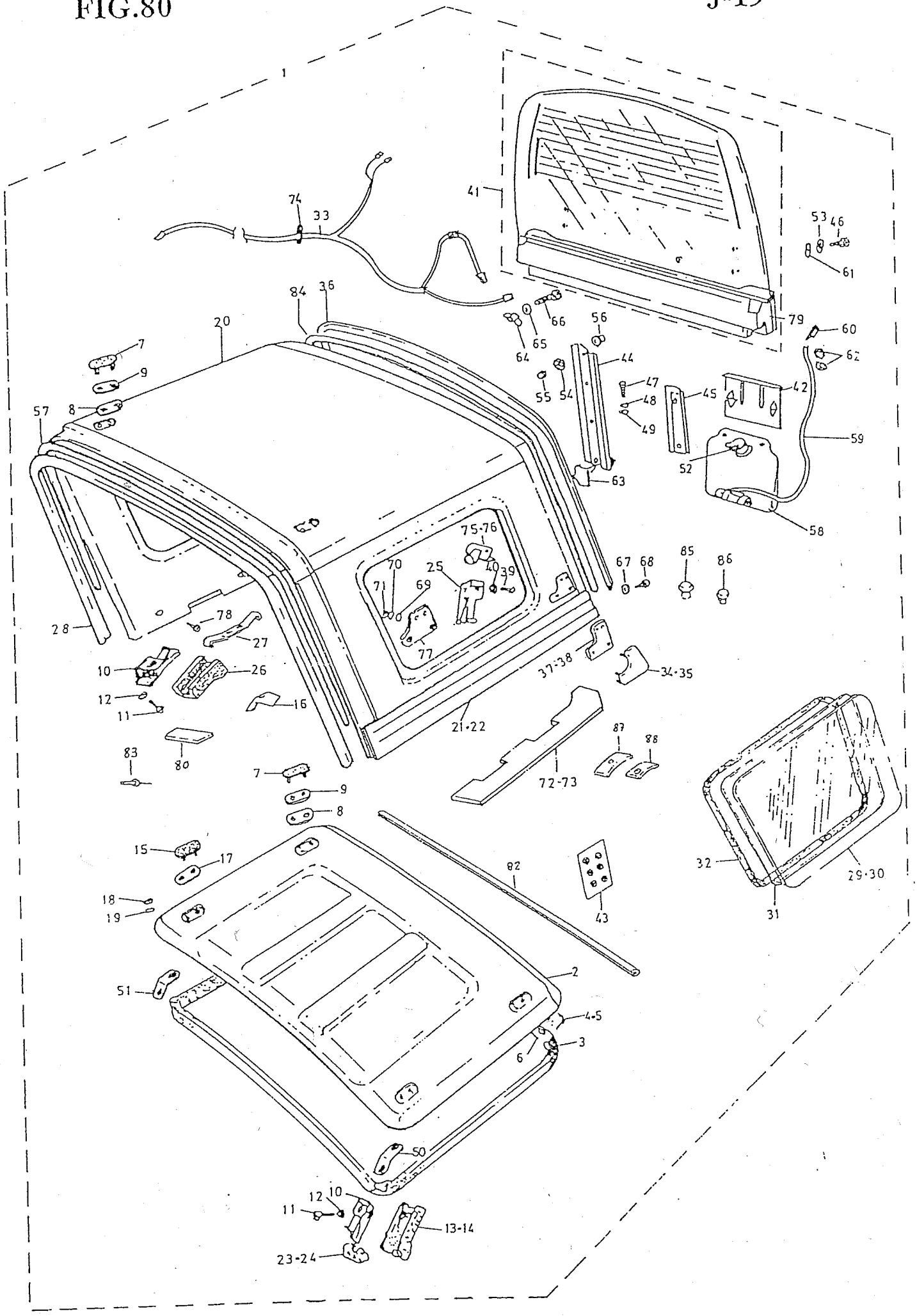
1
74
33
41
53
46
61
84
36
20
66
56
64
65
79
60
62
7
9
57
8
55
54
44
47
48
49
45
42
59
52
63
58
75·76
70
25
40
39
71
69
67
68
85
86
28
78
27
10
26
12
11
16
77
37·38
34·35
21·22
87
88
72·73
83
80
7
9
8
15
17
82
43
32
29·30
31
18
19
2
51
4·5
6
3
50
12
10
11
13·14
23·24

PUBLICACION N:A01116 GRUPO=CARROCERIA SUBGRUPO=J-19TECHO FIBRA
EDICION N: 1 GROUP=BODY SUBGROUP=J-19POLYESTER ROOF
GROUPE=CARROSSERIE SUBGROUPE=J-19TOIT FIBRE

N.FIG PLATE N.FIG	N.PIEZA PARTNUMBER N.PIECE	CAN QTY OUT	DENOMINACION	DESCRIPTION	DENOMINATION	OBSERVACIONES
1	CS2165-KIT	1	C/TECHO FIBRA BLANCO	WHITE FIBRE ROOF ASS	ENS.TOIT FIBRE BLANC	
2	50971-00000	1	TECHO DEL.BLANCO	WHITE FRONT ROOF	TOIT AVANT BLANC	
3	78339-00000	1	GOMA TECHO DEL.	FRONT ROOF RUBBER	CAOUTCHOUC TOIT AV.	
4	50065-00000	1	PERFIL SELL.TECH.DEL	FR.ROOF SEAL.PROFILE	PROF.ETANCH.TOIT AV.	
5	50064-00000	2	PERFIL SELL.TECH.TRA	RR ROOF SEAL.PROFILE	PROF.ETANCH.TOIT ARR	
6	50067-00000	1	GOMA TRAS.TECHO DEL.	FR.ROOF REAR RUBBER	CAOUTCH.ARR.TOIT AV.	
7	78325-00000	4	C/PLACA EXT.TECH.	ROOF OUTER PLATE ASS	ENS.PLAQUE EXT.TOIT	
8	78328-00000	12	SUPLEMENTO	SHIM	SUPPLEMENT	
9	78329-00000	4	JUNTA	GASKET	JOINT	
10	78330-00000	6	CIERRE RAPIDO	QUICK LOCK	FERMETURE RAPIDE	
11	02112-04106	12	TORNILLO	SCREW	VIS	
12	08321A31046	12	ARANDELA GROWER	GROWER WASHER	RONDELLE GROWER	
13	78368-00000	1	TAPA CIERRE RAP.L/I	QUICK LOCK COVER,L/H	COUVERC.FERM.RAP.C/G	
14	78369-00000	1	TAPA CIERRE RAP.L/D	QUICK LOCK COVER,R/H	COUVERC.FERM.RAP.C/D	
15	78343-00000	2	C/PLACA FIJ.DEL.TECH	ROOF FR.FIX.PLATE AS	ENS.PLAQUE FIX.AV.TO	
16	78366-00000	4	ENGANCHE TAPA	COVER HOOK	CROCHET COUVERCLE	
17	78350-00000	2	JUNTA	GASKET	JOINT	
18	09160-06020	4	ARANDELA PLANA	FLAT WASHER	RONDELLE PLATE	
19	08319A21066	4	TUERCA AUTOFRENANTE	AUTOBRAKING NUT	ECROU AUTOFREINANT	
20	50970-00000	1	C/TECHO TRAS.BLANCO	WHITE REAR ROOF ASSY	ENS.TOIT ARR.BLANC	
21	50948-00000	1	MOLD.LAT.TECH.TRA.LI	RR ROOF SIDE MOLD.LH	MOUL.LAT.TOIT ARR.CG	
22	50949-00000	1	MOLD.LAT.TECH.TRA.LD	RR ROOF SIDE MOLD.RH	MOUL.LAT.TOIT ARR.CD	
23	78335-00000	1	ENGANCHE PARABR.L/I	WINDSCREEN HOOK,L/H	CROCHET PAREBR.C/G	
24	78336-00000	1	ENGANCHE PARABR.L/D	WINDSCREEN HOOK,R/H	CROCHET PAREBR.C/D	

FIG.80.1

J-19.1

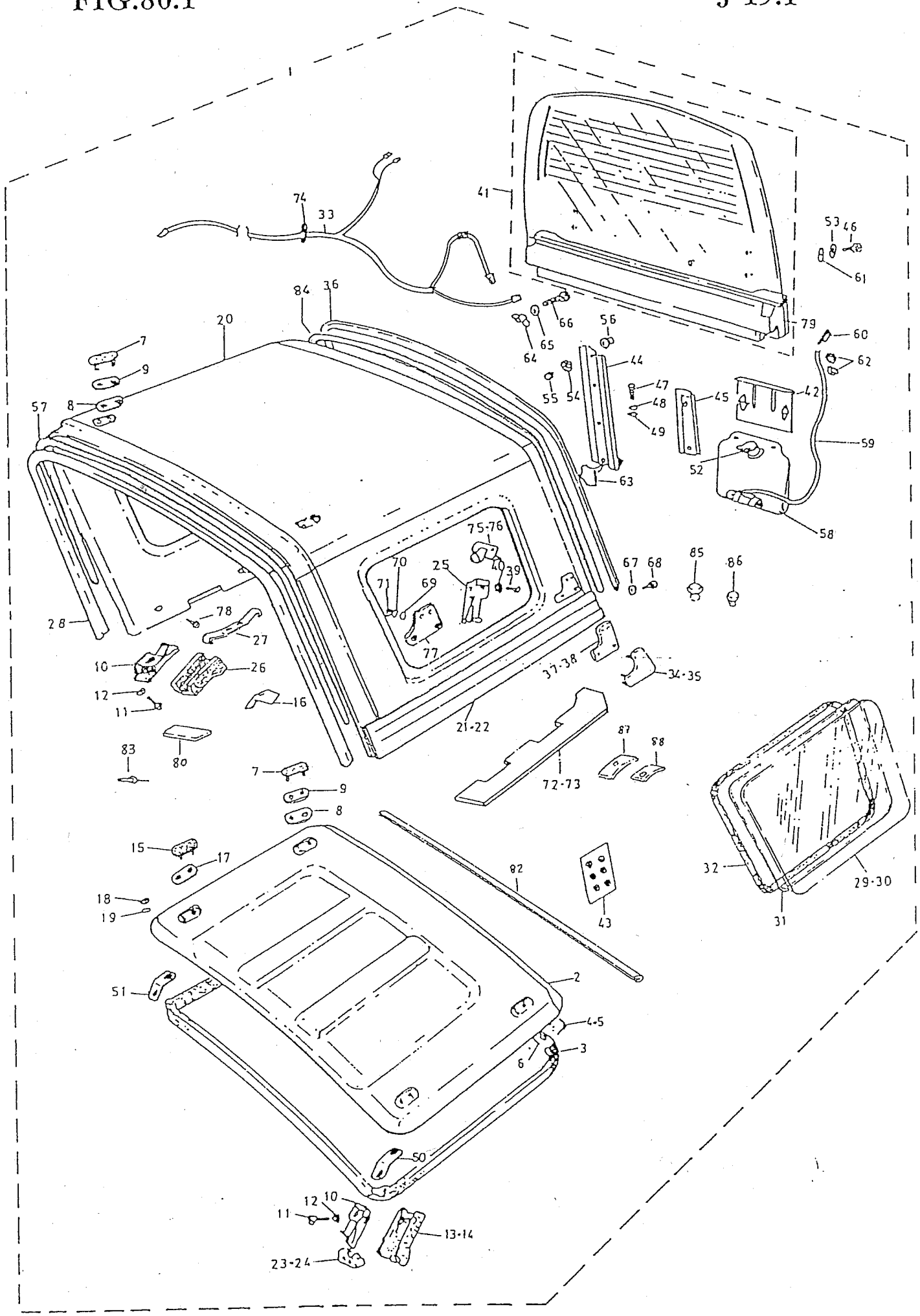
1
74
33
41
53
46
61
84
36
20
66
56
64
65
79
60
62
7
9
57
8
55
54
44
47
48
49
45
42
59
52
63
58
75-76
70
25
40
39
71
69
67
68
85
86
28
78
27
10
26
12
11
16
77
37-38
34-35
21-22
72-73
87
88
83
80
7
9
8
15
17
18
19
82
43
32
29-30
31
51
2
4-5
6
3
50
12
10
11
13-14
23-24

PUBLICACION N:A01116 GRUPO=CARROCERIA SUBGRUPO=J-19.1TECHO FIBRA
EDICION N: 1 GROUP=BODY SUBGROUP=J-19.1POLYES.ROOF
GROUPE=CARROSSERIE SUBGROUPE=J-19.1TOIT FIBRE

N.FIG PLATE N.FIG	N.PIEZA PARTNUMBER N.PIECE	CAN QTY OUT	DENOMINACION	DESCRIPTION	DENOMINATION	OBSERVACIONES
25	78324-00000	2	CIERRE RAPIDO	QUICK LOCK	FERMETURE RAPIDE	
26	78357-00000	2	TAPA CIERRE RAPIDO	QUICK LOCK COVER	COUVERCLE FERM.RAPID	
27	51433-00000	2	ENGANCHE CIERRE RAP.	QUICK LOCK HOOK	CROCHET FERM.RAPIDE	
28	50973-00000	1	GOMA DEL.TECHO.TRAS.	REAR ROOF FR.RUBBER	CAOUTCH.AV.TOIT ARR.	
29	52094-00000	1	CRISTAL LATERAL LD	SIDE GLASS RH	VITRE LATERALE CD	NO COLOUR
	52094-00010	1	CRISTAL LATERAL LD	SIDE GLASS RH	VITRE LATERALE CD	GREEN
30	52093-00000	1	CRISTAL LATERAL LI	SIDE GLASS LH	VITRE LATERALE CG	NO COLOUR
	52093-00010	1	CRISTAL LATERAL LI	SIDE GLASS LH	VITRE LATERALE CG	GREEN
31	78307-00000	2	PERFIL DE CIERRE	LOCK PROFILE	PROFILE FERMETURE	
32	78306-00000	2	GOMA FIJAC.VENT.LAT.	SID.WINDOW FIX.RUBB.	CAOUTCH.FIX.FEN.LAT.	
33	35295-00000	1	CABLEADO MOT.LAVAPAR	SCR.WASH.ENG.WIRING	FAISCEAU MOT.LAVE-VI	
34	52085-00000	1	C/PLACA EXT.TRAS.L/I	RR OUT.PLATE ASSY,LH	ENS.PLAQU.EXT.ARR.CG	
35	52086-00000	1	C/PLACA EXT.TRAS.L/D	RR OUT.PLATE ASSY,RH	ENS.PLAQU.EXT.ARR.CD	
36	52310-00000	1	GOMA PUERTA TRASERA	REAR DOOR RUBBER	CAOUTCHOUC PORTE ARR	
37	52089-00000	1	C/PLACA INT.TRAS.L/I	RR IN.PLATE ASSY,L/H	ENS.PLAQU.INT.ARR.CG	
38	52090-00000	1	C/PLACA INT.TRAS.L/D	RR IN.PLATE ASSY,R/H	ENS.PLAQU.INT.ARR.CD	
39	02112-05126	4	TORNILLO	SCREW	VIS	
40	08321A31056	4	ARANDELA GROWER	GROWER WASHER	RONDELLE GROWER	
41	52102-00000	1	C/CRIST-MOLD.PTA TRA	RR DOOR GLASS-MOLD.A	ENS.VITR-MOUL.PTE AR	NO COLOUR
	52102-00010	1	C/CRIST-MOLD.PTA TRA	RR DOOR GLASS-MOLD.A	ENS.VITR-MOUL.PTE AR	GREEN
42	51413-00000	1	SOPORTE BOTELL-LAVAP	BOTTLE-SC.WASH.BRACK	SUPPORT BOUT.-LAVEVI	
43	52181-00000	15	LAMINA DE CEGADO	BLIND PLATE	PLAQUE	
44	52095-00000	2	PLACA FIJAC.CRISTAL	GLASS FIX.PLATE	PLAQUE FIX.VITRE	
45	51436-00000	2	C/SOPORTE CRIST.TRAS	RR GLASS BRACKET.ASS	ENS.SUPPORT VITR.ARR	
46	78362-00000	4	TORNILLO FIJ.CRISTAL	GLASS FIXING SCREW	VIS FIXATION VITRE	
47	01107-06166	4	TORNILLO	SCREW	VIS	
48	08322-21066	4	ARANDELA PLANA	FLAT WASHER	RONDELLE PLATE	
49	08321A31066	4	ARANDELA GROWER	GROWER WASHER	RONDELLE GROWER	
50	51502-00000	1	PLACA DEL.EXTREM.L/I	CORNER FR.PLATE,L/H	CORNER FR.PLATE,L/H	
51	51501-00000	1	PLACA DEL.EXTREM.L/D	CORNER FR.PLATE,R/H	PLAQUE AV.COIN,C/D	

FIG.80.2

J-19.2

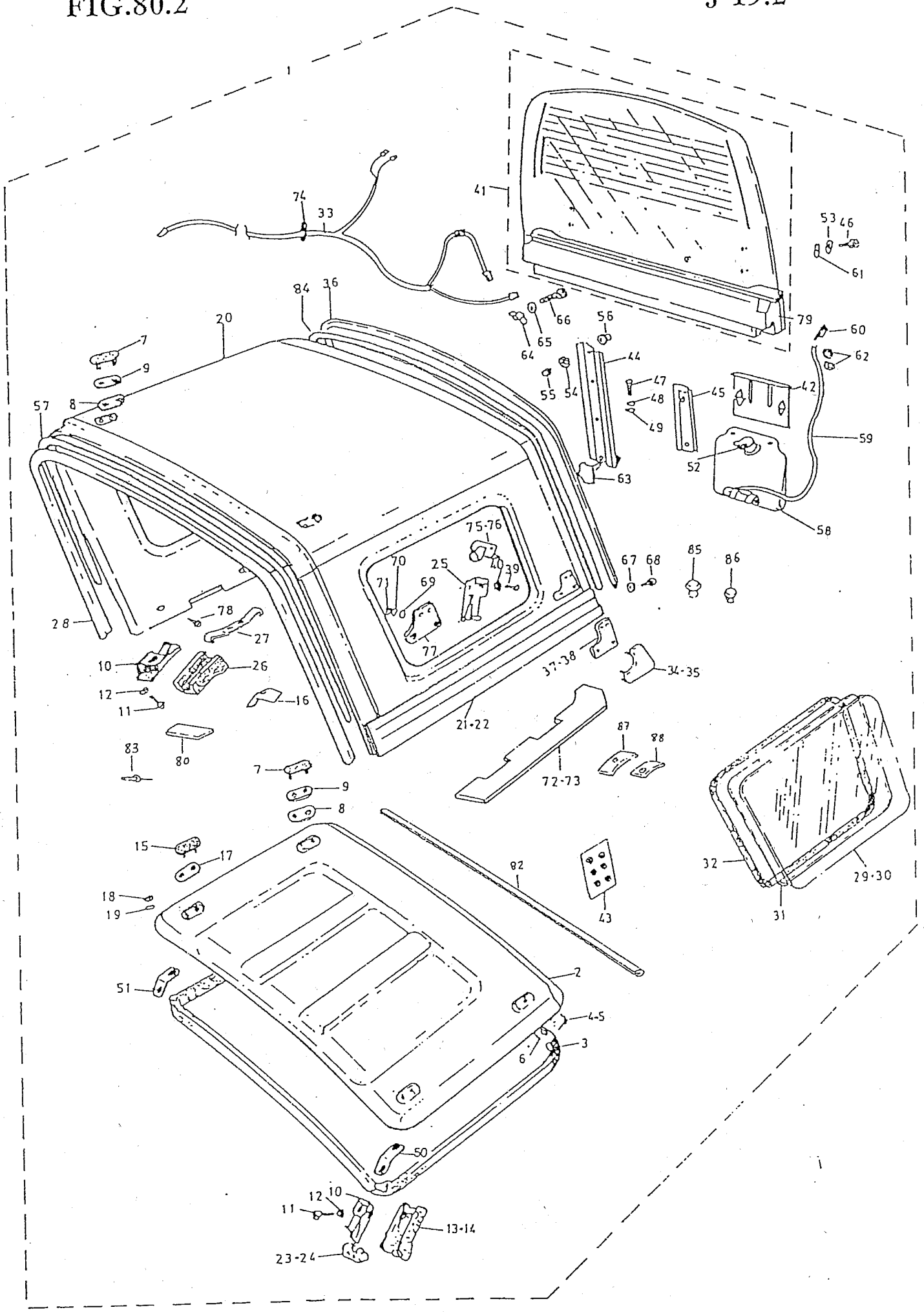

1
74
33
41
53
46
61
84
36
20
66
65
64
56
79
60
62
7
9
8
57
55
54
44
47
48
49
45
42
59
52
63
58
75-76
70
25
40
39
71
69
77
67
68
85
86
28
78
27
10
26
12
11
16
37-38
34-35
21-22
87
88
72-73
83
80
7
9
8
15
17
82
32
29-30
31
18
19
43
51
2
4-5
3
6
50
12
10
11
13-14
23-24

PUBLICACION N:A01116 GRUPO=CARROCERIA SUBGRUPO=J-19.2TECHO FIBRA
EDICION N: 1 GROUP=BODY SUBGROUP=J-19.2POLYES.ROOF
GROUPE=CARROSSERIE SUBGROUPE=J-19.2TOIT FIBRE

N.FIG PLATE N.FIG	N.PIEZA PARTNUMBER N.PIECE	CAN QTY OUT	DENOMINACION	DESCRIPTION	DENOMINATION	OBSERVACIONES
52	00000A00293	1	TAPON DEPOSITO	TANK PLUG	BOUCHON RESERVOIR	
53	78359-00000	4	TOPE EXTERIOR	OUTER STOP	BUTEE EXTERIEURE	
54	09160-08075	4	ARANDELA PLANA	FLAT WASHER	RONDELLE PLATE	
55	08313B11085	4	TUERCA CAPERUZA	NUT	ECROU	
56	78361-00000	4	TOPE INTERIOR	INNER STOP	BUTEE INTERIEURE	
57	50066-00000	1	GOMA DEL.BARRA ANTIV	DUMP.ROD FR.RUBBER	CAOUTCH.AV.BARRE	
58	35011-00000	1	DEPOSITO LAVACR.POST	REAR GLASSWASH.TANK	RESERV.LAVE-VITR.ARR	
59	35253-00000	1	TUBO	HOSE	TUYAU	
60	35013-00000	1	DIFUSOR	JET	GICLEUR	
	35073-00000	1	DIFUSOR	JET	GICLEUR	ALTERN.
61	78360-00000	4	ARANDELA GOMA	RUBBER WASHER	RONDELLE CAOUTCHOUC	
62	09320-09004	1	ARANDELA JUNTA	GASKET WASHER	RONDELLE JOINT	
63	51572-00000	4	POMO	KNOB	BOUTON	
64	08310-11066	1	TUERCA MARIPOSA	BUTTERFLY NUT	ECROU PAPILLON	
65	09160-06020	1	ARANDELA PLANA	FLAT WASHER	RONDELLE PLATE	
66	09119A06007	1	TORNILLO	SCREW	VIS	
67	08322-21063	2	ARANDELA	WASHER	RONDELLE	
68	02142-06163	2	TORNILLO FIJAC.MOLD.	MOLDING FIXING SCREW	VIS FIXATION MOULURE	
69	09160-06019	8	ARANDELA PLANA	FLAT WASHER	RONDELLE PLATE	
70	08321A31066	8	ARANDELA GROWER	GROWER WASHER	RONDELLE GROWER	
71	08313B11068	8	TUERCA DE CAPERUZA	NUT	ECROU	
72	50964-00000	1	GOMA ADH.LAT.INF.	LOWER SID.ADH.RUBBER	CAOUTCH.ADH.LAT.INF.	ROOF L/H
73	50965-00000	1	GOMA ADH.LAT.INF.	LOWER SID.ADH.RUBBER	CAOUTCH.ADH.LAT.INF.	ROOF R/H
74	35070-00000	2	ARANDELA PASACABLE	GROMMET	RONDELLE PASSE-CABLE	
75	78320-00000	1	C/SOP.TRAS.CIERR.RAP	QUIC.LOCK RR BRACK.A	ENS.SUPP.ARR.FERM.RA	L/H
76	78323-00000	1	C/SOP.TRAS.CIERR.RAP	QUIC.LOCK RR BRACK.A	QUIC.LOCK RR BRAZ.A	R/H
77	52088-00000	2	JUNTA,PLACA EXT-TECH	GASKET,OUT.PLATE-ROO	JOINT,PLAQU.EXT-TOIT	
78	03141-06128	6	TORNILLO FIJ.INT.MOL	MOLD.INNER FIX.SCREW	VIS FIXA.INT.MOULURE	
79	50952-00000	1	MOLDURA CRISTAL TRAS	REAR GLASS MOLDING	MOULURE VITRE ARR.	
80	52308-00000	2	PERFIL DE GOMA	RUBBER PROFILE	PROFIL CAOUTCHOUC	
81	52157-00000	1	PERF.SELL.BAR.ANT.	DUMP.BAR SEAL PROFIL	PROF.ETANCH.BARR.CAP	NOT SHOWN
82	52801-00000	1	PERFIL PROT.BAR.ANTI	ANTIDUM.PROT.PROFILE	PROFIL PROT.BARR.CAP	
83	09229-84C10	6	REMACHE POP	POP RIVET	RIVET POP	
84	78340-00000	2	JUNTA SUP.PTA TRAS.	RR DOOR UPPER GASKET	JOINT SUP.PORTE ARR.	
85	02142-05083	12	TORNILLO AGUJ.SOBR.	SCREW	VIS	
86	02112-04103	4	TORNILLO AGUJ.SOBR.	SCREW	VIS	
87	51620-00000	6	PLACA PROTECC.LAT.	SIDE PROTECT.PLATE	PLAQUE PROTECT.LAT.	
88	51621-00000	4	PLACA PROTECC.TRAS.	REAR PROTECT.PLATE	PLAQUE PROTECT.ARR.	

FIG.81

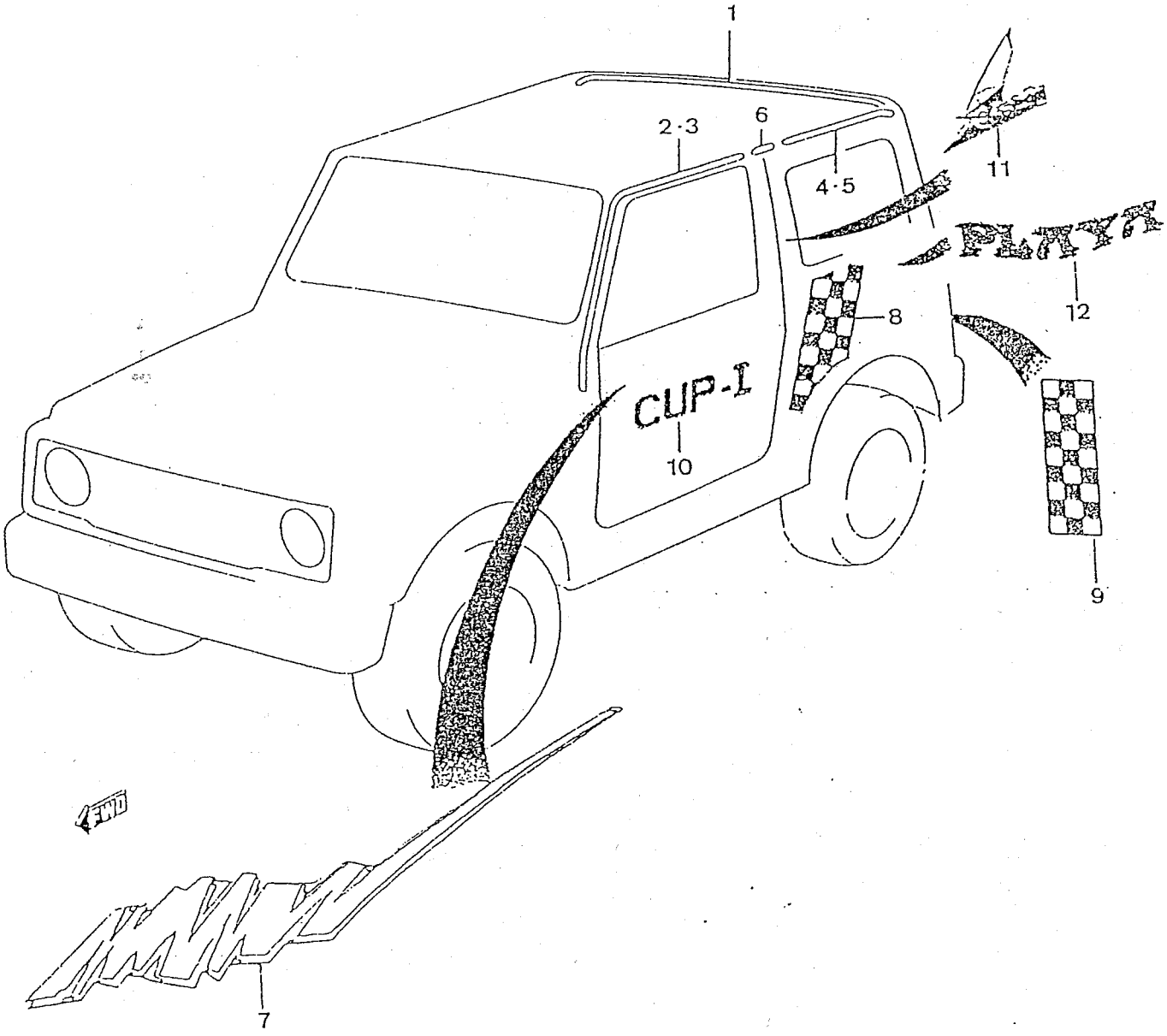

PUBLICACION N:A01116 GRUPO=CARROCERIA SUBGRUPO=J-20MOLD./BANDA LAT
EDICION N: 1 GROUP=BODY SUBGROUP=J-20MOLD./SIDE STRAP
GROUPE=CARROSSERIE SUBGROUPE=J-20MOUL./BANDE LAT.

N.FIG PLATE N.FIG	N.PIEZA PARTNUMBER N.PIECE	CAN QTY OUT	DENOMINACION	DESCRIPTION	DENOMINATION	OBSERVACIONES
1	77511-80160	1	MOLDURA TRAS.TECHO	ROOF REAR MOLDING	MOULURE ARR.TOIT	'V'
2	77512-80160	1	MOLDURA TECHO,L/D	ROOF MOLDING,R/H	MOULURE TOIT,C/D	'V'
3	77513-80160	1	MOLDURA TECHO,L/I	ROOF MOLDING, L/H	MOULURE TOIT,C/G	'V'
4	77514-80160	1	MOLDURA LAT.L/D	SIDE MOLDING,R/H	MOULURE LAT.C/D	'V'
5	77515-80160	1	MOLDURA LAT.L/I	SIDE MOLDING,L/H	MOULURE LAT.C/G	'V'
6	77516-80160	2	JUNTA MOLDURA	MOLDING GASKET	JOINT MOULURE	'V'
7	77640-50C00-L84	1	BANDA DECORATIVA,L/D	GARNISH STRAP,R/H	BANDE DECORATIVE,C/D	CATALUNA 93
	77650-50C00-L84	1	BANDA DECORATIVA,L/I	GARNISH STRAP,L/H	BANDE DECORATIVE,C/G	CATALUNA 93
8	52778-00000	1	JUEGO BANDAS LAT.	SIDE STRAP SET	JEU BANDES LATERALES	CUP-I
	77640-84C00	1	BANDA DECORATIVA,L/I	GARNISH STRAP,L/H	BANDE DECORATIVE,C/G	CUP-I
	77650-84C00	1	BANDA DECORATIVA,L/D	GARNISH STRAP,R/H	BANDE DECORATIVE,C/D	CUP-I
9	52779-00000	1	BANDA TRASERA	REAR STRAP	BANDE ARRIERE	CUP-I
10	52777-00000	2	ANAGRAMA "CUP-I"	"CUP-I" ANAGRAM	ANAGRAMME "CUP-I"	CUP-I
11	77610-84C00	1	ANAGR."SURFING",L/I	"SURFING" ANAGR.L/H	ANAGR. "SURFING",C/G	PLAYA
	77620-84C00	1	ANAGR."SURFING",L/D	"SURFING" ANAGR.R/H	ANAGR. "SURFING",C/D	PLAYA
12	77630-84C00	2	ANAGRAMA "PLAYA"	"PLAYA" ANAGRAM	ANAGRAMME "PLAYA"	PLAYA

FIG.82

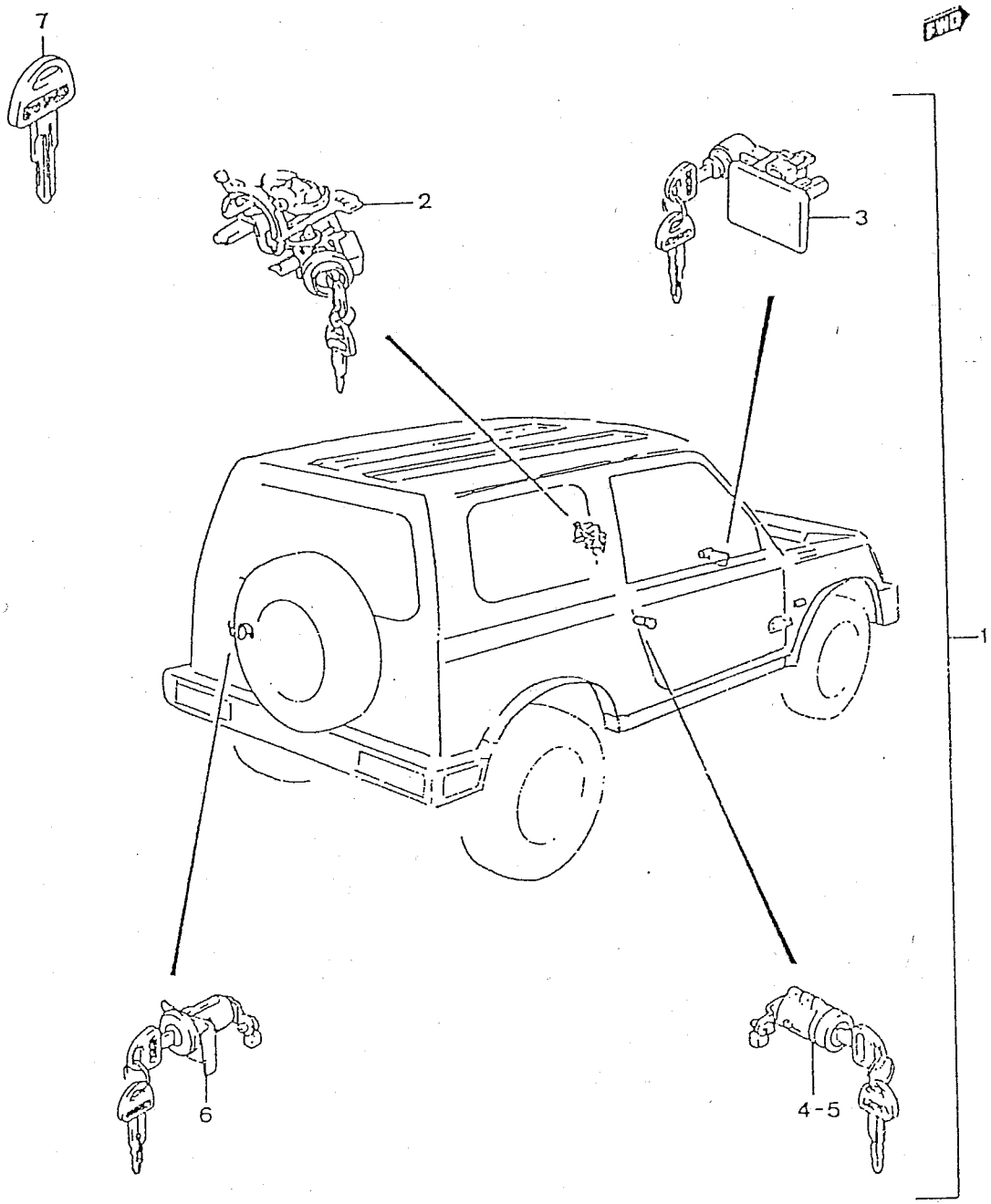

PUBLICACION N:A01116 GRUPO=CARROCERIA SUBGRUPO=J-21CERRADURAS
EDICION N: 1 GROUP=BODY SUBGROUP=J-21LOCKS
GROUPE=CARROSSERIE SUBGROUPE=J-21SERRURES

N.FIG PLATE N.FIG	N.PIEZA PARTNUMBER N.PIECE	CAN QTY OUT	DENOMINACION	DESCRIPTION	DENOMINATION	OBSERVACIONES
1	50024-00000	1	C/CERRADURA	LOCK ASSY	ENSEMBLE SERRURE	SERV.INF.P-19
	51594-00000	1	C/CERRADURA	LOCK ASSY	ENSEMBLE SERRURE	D 81094
2	37100A73302	1	BLOCAJE DIRECCION	STEERING BLOCKING	BLOCAGE DIRECTION	SERV.INF.P-19
	37100B73302	1	BLOCAJE DIRECCION	STEERING BLOCKING	BLOCAGE DIRECTION	D 81094
3	51588-00000	1	TAPA GUANTERA	GLOVE BOX COVER	COUVERCLE BOITE GANT	D 81094
	73910A80000	1	TAPA GUANTERA	GLOVE BOX COVER	COUVERCLE BOITE GANT	SERV.INF.P-19
4	51590-00000	1	PUERTA DEL.L/D	FRONT DOOR,R/H	PORTE AVANT,C/D	D 81094
	82270A80100	1	PUERTA DEL.L/D	FRONT DOOR,R/H	PORTE AVANT,C/D	SERV.INF.P-19
5	51590-00000	1	PUERTA DEL.L/I	FRONT DOOR,L/H	PORTE AVANT,C/G	D 81094
	82280A80100	1	PUERTA DEL.L/I	FRONT DOOR,L/H	PORTE AVANT,C/G	SERV.INF.P-19
6	51590-00000	1	PUERTA TRASERA	REAR DOOR	PORTE ARRIERE	D 81094
	82270A80100	1	PUERTA TRASERA	REAR DOOR	PORTE ARRIERE	SERV.INF.P-19
7	00000A00296	1	LLAVE EN BRUTO	BLANK KEY	CLE BRUTE	SERV.INF.P-19
	00000A00689	1	LLAVE EN BRUTO	BLANK KEY	CLE BRUTE	D 81094

GRUPO 10 TAPICERIA

GROUP 10 TRIM

GROUP 10 GARNITURE

COMPOSICION.....COMPOSITION.....COMPOSICION

REFERENCIA PARTNUMBER NUM.PIECE	DENOMINACION	DESCRIPTION	DENOMINATION
410083	K-02GUARNECIDO SALP.	K-02DASHBOAR.GARNISH	K-02GARNIT.TAB.BORD
410084	K-03PANEL INSTRUMENT	K-03DASH BOARD	K-03TABLEAU BORD
410085	K-04TECHO LONA	K-04CANVAS ROOF	K-04TOIT BACHE
410086	K-05TAPIC.PTA DEL.	K-05FRONT DOOR TRIM	K-05GARNIT.PTE AV.
410087	K-06TAPIC.LAT.TRAS.	K-06REAR SIDE TRIM	K-06GARNIT.LAT.ARR.
410088	K-07MOQUET./ESTERA	K-07MOQUET./CARPET	K-07MOQUETTE/TAPIS

FIG.83

K-02

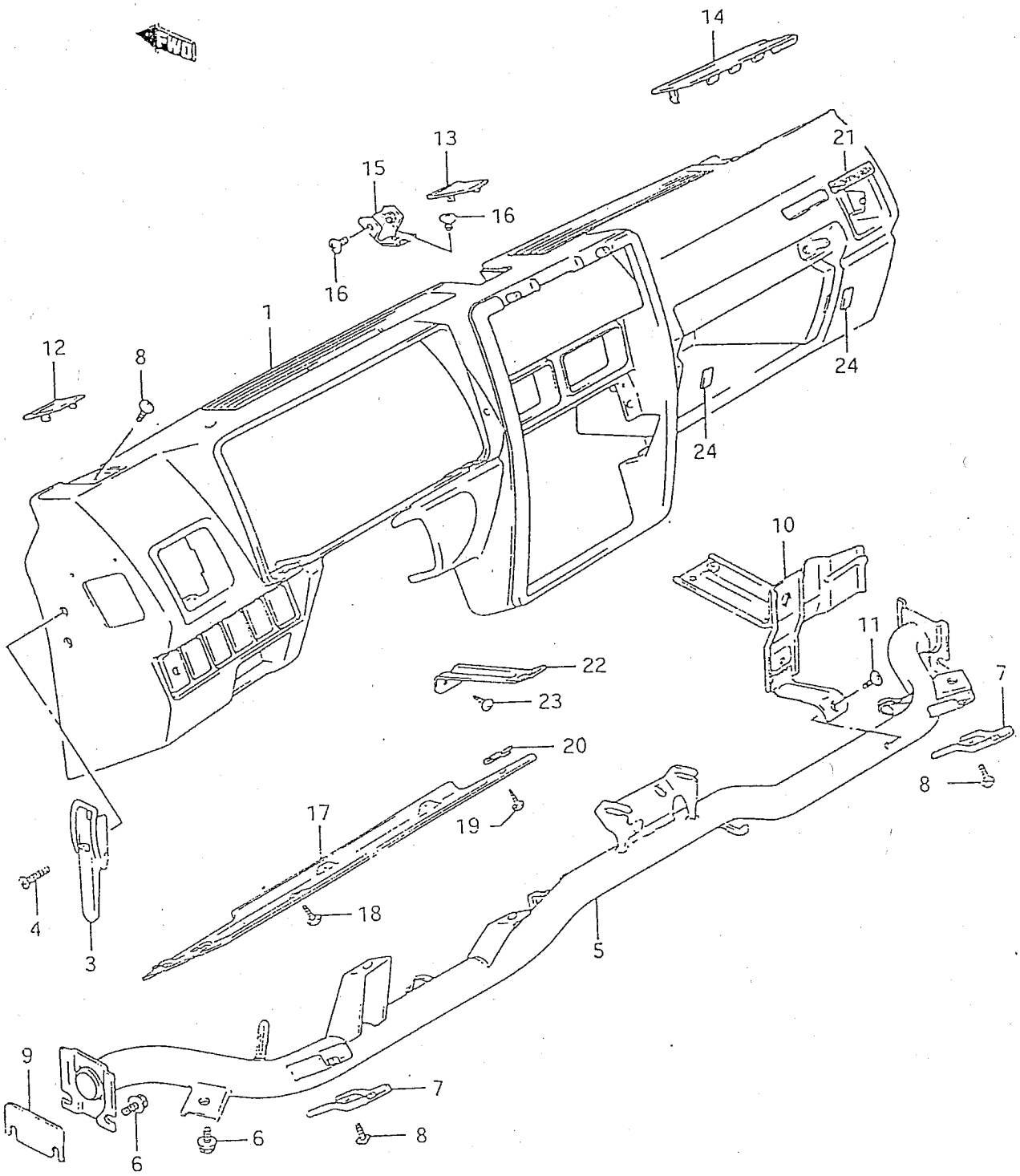

PUBLICACION N:A01116 GRUPO=TAPICERIA SUBGRUPO=K-02GUARNECIDO SALP.
EDICION N: 1 GROUP=TRIM SUBGROUP=K-02DASHBOAR.GARNISH
GROUPE=GARNITURE SUBGROUPE=K-02GARNIT.TAB.BORD

N.FIG PLATE N.FIG	N.PIEZA PARTNUMBER N.PIECE	CAN QTY OUT	DENOMINACION	DESCRIPTION	DENOMINATION	OBSERVACIONES
1	73111C70A11	1	PANEL INSTRUMENTOS	DASH BOARD	TABLEAU DE BORD	
2	04008-00000	2	TUERCA	NUT	ECROU	NOT SHOWN
3	72430-80002	2	MANECILLA VENTANA	WINDOW HANDLE	MANIVELLE FENETRE	'J'
4	02112-06165	4	TORNILLO	SCREW	VIS	
	09160-06074	4	ARANDELA PLANA	FLAT WASHER	RONDELLE PLATE	
5	72310A70A20	1	SOPORTE COLUMNA DIR.	STEER.COLUMN BRACKET	SUPPORT COLONNE DIR.	
6	02142-06164	6	TORNILLO SOPORTE	BRACKET SCREW	VIS SUPPORT	
7	50747-00000	2	TIRANTA PANEL INSTR.	DASH BOARD STAY	TIGE TABLEAU BORD	'V'
8	02142-06164	6	TORNILLO	SCREW	VIS	
9	72321-80001	1	PLACA SOP.COLUMNA	COLUMN BRACK.PLATE	PLAQUE SUPP.COLONNE	
10	73810-83031	1	TIRANTA	STAY	TIGE	
11	03141-06125	1	TORNILLO	SCREW	VIS	
12	73811-70A00	1	TAPA PANEL INSTR.N.1	DASH BOARD COVER N.1	COUVERC.TAB.BORD N.1	T1
	73811B70A00-5ES	1	TAPA PANEL INSTR.N.1	DASH BOARD COVER N.1	COUVERC.TAB.BORD N.1	T2,T3
13	73812-70A01	1	TAPA PANEL INSTR.N.3	DASH BOARD COVER N.3	COUVERC.TAB.BORD N.3	T1
	73812B70A01-5ES	1	TAPA PANEL INSTR.N.3	DASH BOARD COVER N.3	COUVERC.TAB.BORD N.3	T2,T3
14	73821B70A11-5ES	1	TAPA PANEL INSTR.N.2	DASH BOARD COVER N.2	COUVERC.TAB.BORD N.2	T2,T3
15	73815-70A00	1	SOPORTE CENTRAL	CENTRAL BRACKET	SUPPORT CENTRAL	T1
16	02142-06123	1	TORNILLO	SCREW	VIS	T1
	02142-06165	3	TORNILLO	SCREW	VIS	T2,T3
	03241-06126	2	TORNILLO	SCREW	VIS	T1
17	73813-83010-5ES	1	CUBIERTA INFERIOR	LOWER COVER	COUVERCLE INFERIEUR	
18	03141-06125	2	TORNILLO	SCREW	VIS	
19	03241-05165	1	TORNILLO	SCREW	VIS	
20	09148A05013	1	TUERCA	NUT	ECROU	
21	77811-83060-D56	1	ANAGRAMA GUANTERA	GLOVE BOX ANAGRAM	ANAGRAMME BOITE GANT	
22	73825-70A00	1	SOPORTE PANEL	PANEL BRACKET	SUPPORT PANNEAU	
23	03241-05105	2	TORNILLO	SCREW	VIS	
24	73415-70A00	2	FORRO PANEL INSTRUM.	DASH BOARD LINING	REVETEMENT TAB.BORD	

FIG.84

K-03

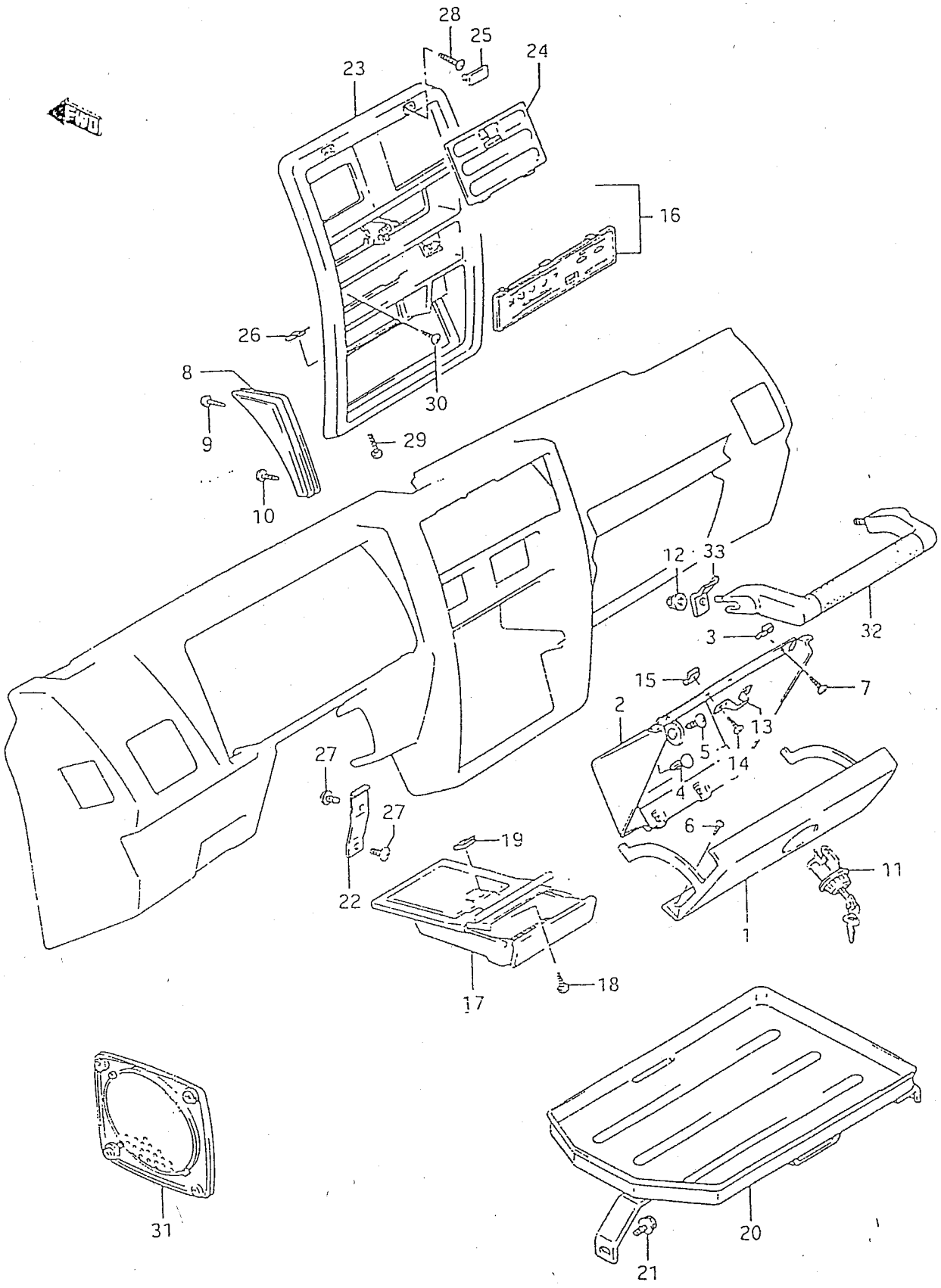
28
25
24
23
16
26
8
9
10
30
29
12
33
32
3
15
7
2
13
5
14
4
6
27
27
22
19
11
1
17
18
31
20
21

PUBLICACION N:A01116 GRUPO=TAPICERIA SUBGRUPO=K-03PANEL INSTRUMENT
EDICION N: 1 GROUP=TRIM SUBGROUP=K-03DASH BOARD
GROUPE=GARNITURE SUBGROUPE=K-03TABLEAU BORD

N.FIG PLATE N.FIG	N.PIEZA PARTNUMBER N.PIECE	CAN QTY OUT	DENOMINACION	DESCRIPTION	DENOMINATION	OBSERVACIONES
1	73411A70A00-5ES	1	TAPA GUANTERA	GLOVE BOX COVER	COUVERCLE BOITE GANT	
2	73451A70A10	1	CAJA GUANTERA	GLOVE BOX HOUSING	LOGEMENT BOITE GANT	
3	09148A05013	2	TUERCA	NUT	ECROU	
4	09409-10301-5ES	1	CLIP NEGRO	BLACK CLIP	CLIP NOIR	
5	02142-06165	1	TORNILLO	SCREW	VIS	
6	03141-04165	3	TORNILLO	SCREW	VIS	
7	03241-05205	2	TORNILLO	SCREW	VIS	
8	73823-70A10-5PK	1	EMBELLECEDOR	GARNISH	ENJOLIVEUR	
9	03541-05123	1	TORNILLO	SCREW	VIS	
10	03541-05163	1	TORNILLO	SCREW	VIS	
11	51588-00000	1	CERRADURA GUANTERA	GLOVE BOX LOCK	SERRURE BOITE GANT	
12	08316A16086	2	TUERCA	NUT	ECROU	
13	08001-00000	1	CLIP CERRADURA	LOCK CLIP	CLIP SERRURE	
	50323-00000	1	GOLPEADOR	SPRING	RESSORT	
14	03241-05205	2	TORNILLO	SCREW	VIS	T1
	03241-05255	2	TORNILLO	SCREW	VIS	T2,T3
	08322-21065	2	ARANDELA	WASHER	RONDELLE	
15	09148A05013	2	TUERCA	NUT	ECROU	
16	73850A70A00	1	PANEL CONTROL CALEF.	HEATER CONTROL PANEL	PANNEAU CONTR.CHAUFF	T1,T2
	73850C70A00-5PK	1	PANEL CONTROL CALEF.	HEATER CONTROL PANEL	PANNEAU CONTR.CHAUFF	T3
17	89810A70A00-5PK	1	CENICERO	ASHTRAY	CENDRIER	
18	03241-05108	1	TORNILLO	SCREW	VIS	
19	09148A05004	1	TUERCA	NUT	ECROU	
	09148A05013	1	TUERCA	NUT	ECROU	
20	75610B83020	1	BANDEJA PORTA-OBJETO	PACKAGE TRAY	PLATEAU PORTE-OBJETS	
21	02142-06106	2	TORNILLO	SCREW	VIS	
22	73824-83000	1	SOPORTE TIRANTA	STAY BRACKET	SUPPORT ENTRETOISE	
23	73841A70A00	1	PANEL CONSOLA	CONSOLE PANEL	PANNEAU CONSOLE	
24	73842-70A00-5PK	1	TAPA PANEL CONSOLA	CONSOLE PANEL COVER	COUVERC.PANN.CONSOLE	
25	73843-70A01-5PK	2	TAPON	PLUG	BOUCHON	
26	09148A05004	2	TUERCA	NUT	ECROU	
27	02142-06125	2	TORNILLO	SCREW	VIS	
28	03111-05303	2	TORNILLO	SCREW	VIS	
29	03241-05165	4	TORNILLO	SCREW	VIS	
30	03541-05123	2	TORNILLO	SCREW	VIS	
31	76411A80000	2	C/TAPA ALTAVOZ	SPEAKER COVER ASSY	ENS.COUVER.HAUT-PARL	
32	84410-70A00-5ES	1	ASIDERO DELANTERO	FRONT HANDLE	POIGNEE AVANT	
33	84422-70A00	2	SOPORTE ASIDERO DEL.	FRONT HANDLE BRACKET	SUPPORT POIGNEE AV.	

FIG.85

K-04

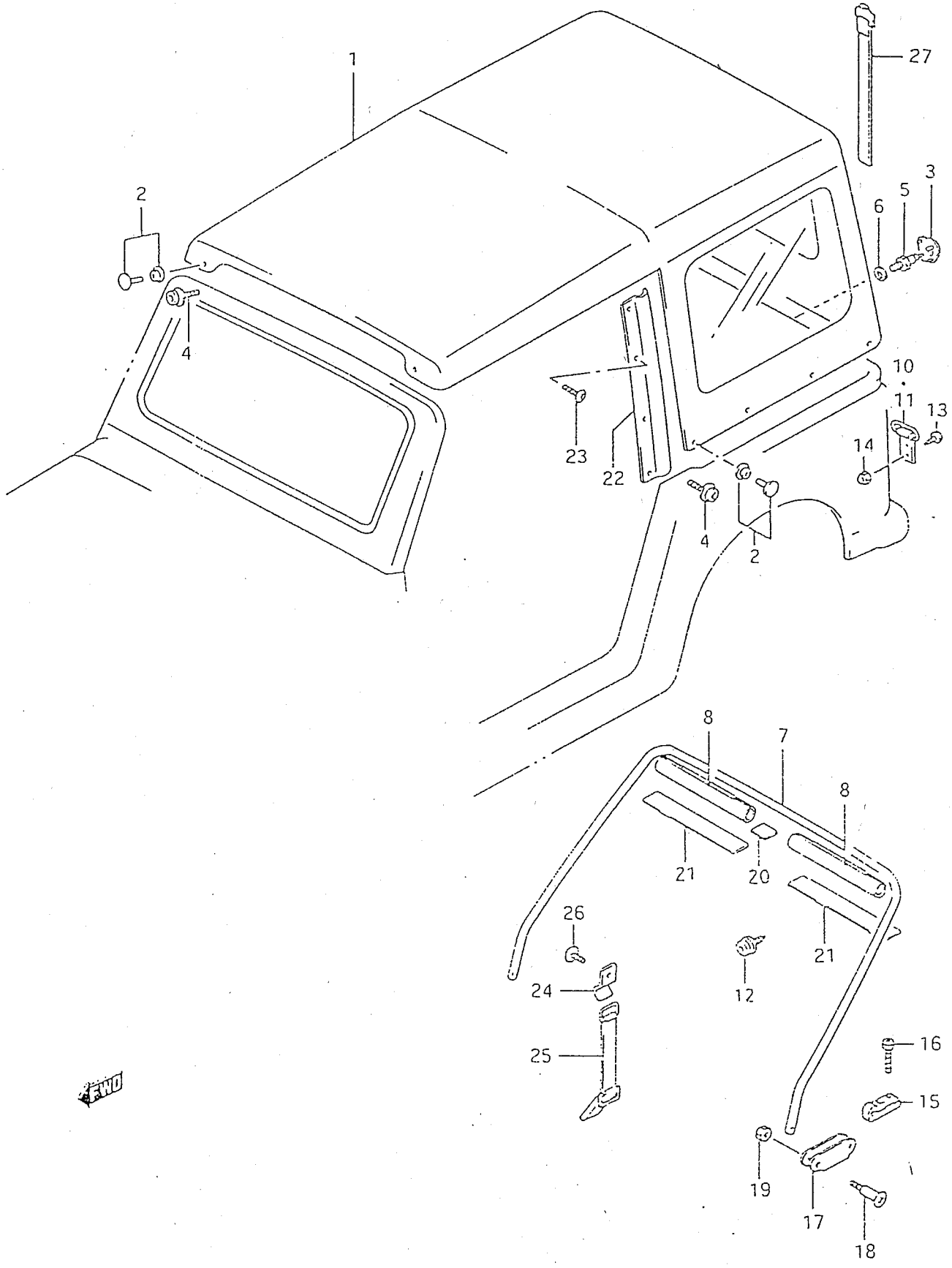

PUBLICACION N:A01116 GRUPO=TAPICERIA SUBGRUPO=K-04TECHO LONA
EDICION N: 1 GROUP=TRIM SUBGROUP=K-04CANVAS ROOF
GROUPE=GARNITURE SUBGROUPE=K-04TOIT BACHE

N.FIG PLATE N.FIG	N.PIEZA PARTNUMBER N.PIECE	CAN QTY OUT	DENOMINACION	DESCRIPTION	DENOMINATION	OBSERVACIONES
	00000A01119	1	K/TECHO LONA NEGRO	BLACK CANVAS ROOF K/	K/TOIT BACHE NOIRE	JX
	00000A01121	1	K/TECHO LONA BLANCO	WHITE CANVAS ROOF K/	K/TOIT BACHE BLANCHE	JX
1	78310-83117-40U	1	TECHO NEGRO	BLACK ROOF	TOIT NOIR	JA
	78310-83117-6EP	1	TECHO BLANCO	WHITE ROOF	TOIT BLANC	JA
	78310-83127-45R	1	TECHO GRIS	GREY ROOF	TOIT GRIS	JA
	78310-83216	1	TECHO GRIS	GREY ROOF	TOIT GRIS	
	78310-83216-55M	1	TECHO NEGRO	BLACK ROOF	TOIT NOIR	JX
	78310-83216-6ER	1	TECHO BLANCO	WHITE ROOF	TOIT BLANC	JX
	78310-83216-PRB	1	TECHO NEGRO	BLACK ROOF	TOIT NOIR	CLEAR GLASS
	78310-83216-PRW	1	TECHO BLANCO	WHITE ROOF	TOIT BLANC	CLEAR GLASS
	78310A83216-55M	1	TECHO NEGRO	BLACK ROOF	TOIT NOIR	GREEN GLASS
	78310A83216-6ER	1	TECHO BLANCO	WHITE ROOF	TOIT BLANC	GREEN GLASS
2	79100-63850	12	CORCHETE HEMBRA LAT.	SIDE FEMALE HOOK	CROCHET FEMELLE LAT.	
	79100-63860	12	CORCHETE CROMADO	CHROMIUM PLATED HOOK	CROCHET CHROME	
3	79133-63041	4	CORCHETE HEMBRA	FEMALE HOOK	CROCHET FEMELLE	
4	78491-80011	12	GANCHO DEL.MACHO	MALE FRONT HOOK	CROCHET AVANT MALE	
5	79134-73002	4	GANCHO DEL.MACHO	MALE FRONT HOOK	CROCHET AVANT MALE	
6	09161-04011	4	ARANDELA PLANA	FLAT WASHER	RONDELLE PLATE	
7	78470-80002	1	MARCO ARCO TRAS.	REAR BOW FRAME	CADRE ARCEAU ARR.	
8	78482-80301	2	ALMOHADILLA ARCO	BOW CUSHION	COUSSINET ARCEAU	
9	78490-83000	2	CINTA TENSOR TOLDO	CANVAS TENSION.BAND	TENDEUR BACHE	GREY
	78490A83000-5EB	2	CINTA TENSOR TOLDO	CANVAS TENSION.BAND	TENDEUR BACHE	WHITE
	78490B83000	2	CINTA TENSOR TOLDO	CANVAS TENSION.BAND	TENDEUR BACHE	BLACK
10	78415-83001	1	SOPORTE TENSOR,L/D	TENSION.BRACKET,R/H	SUPPORT TENDEUR,C/D	
11	78416-83000	1	SOPORTE TENSOR,L/I	TENSION.BRACKET,L/H	SUPPORT TENDEUR,C/G	
12	78491-83000	3	BROCHE MACHO	MALE HOOK	CROCHET MALE	
13	02142-06003	2	TORNILLO	SCREW	VIS	
14	08313B11083	2	TUERCA	NUT	ECROU	
15	78481-80001	2	BISAGRA MACHO	MALE HINGE	CHARNIERE MALE	
16	02112-06303	4	TORNILLO	SCREW	VIS	
17	78485-80000	2	BISAGRA HEMBRA	FEMALE HINGE	CHARNIERE FEMELLE	
18	78488-80000	4	PASADOR	PIN	CLAVETTE	
19	08313B11063	4	TUERCA	NUT	ECROU	
20	78476-80001	1	APOYO ARCO SUP.	UPPER BOW REST	APPUI ARCEAU SUP.	
21	78484-80300	2	LAMINA ARCO	BOW PLATE	PLAQUE ARCEAU	
22	78411-80101	2	PERFIL LATERAL	SIDE PROFILE	PROFIL LATERAL	
23	02142-06103	8	TORNILLO	SCREW	VIS	
24	76421-80001	2	GANCHO SUPERIOR	UPPER HOOK	CROCHET SUPERIEUR	
25	09462-00040	2	TIRA ARCO SUP.	UPPER BOW STRIP	BANDE ARCEAU SUP.	
26	02142-05083	2	TORNILLO	SCREW	VIS	

FIG.86

K-05

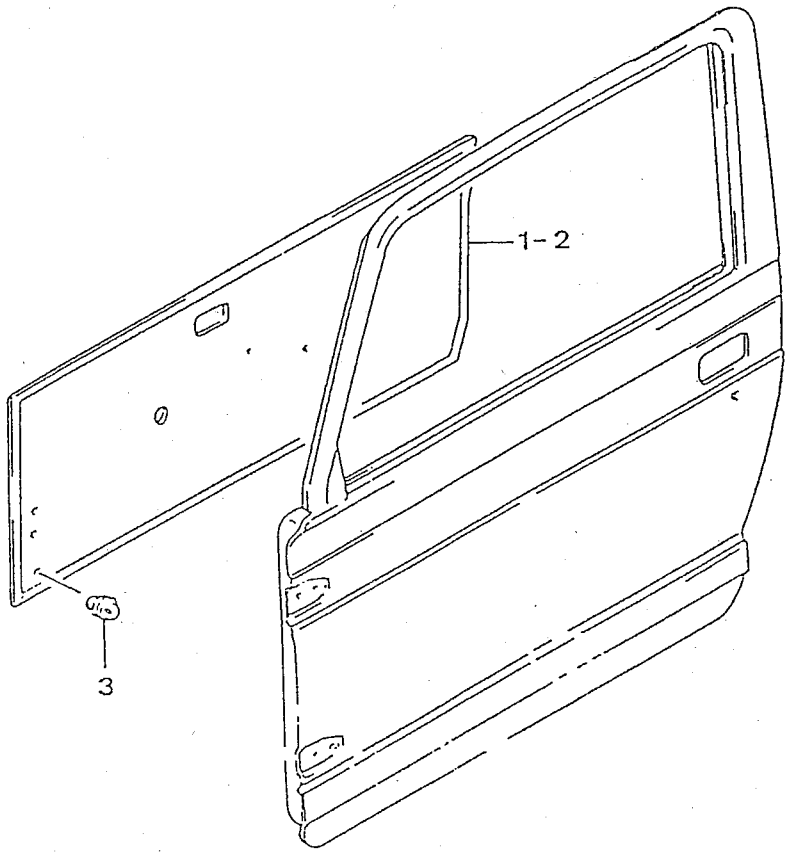

PUBLICACION N:A01116 GRUPO=TAPICERIA SUBGRUPO=K-05TAPIC.PTA DEL.
EDICION N: 1 GROUP=TRIM SUBGROUP=K-05FRONT DOOR TRIM
GROUPE=GARNITURE SUBGROUPE=K-05GARNIT.PTE AV.

N.FIG PLATE N.FIG	N.PIEZA PARTNUMBER N.PIECE	CAN QTY OUT	DENOMINACION	DESCRIPTION	DENOMINATION	OBSERVACIONES
1	51161-00000	1	C/TAPIC.VINILO,L/I	VINYL TRIM ASSY,L/H	ENS.GARNIT.VINYLE,CG	T1-'GREY HUELLA'
	52324-00000	1	C/TAPIC.TELA L/I	MATERIAL TRIM ASS.LH	ENS.GARNITU.TISSU,CG	PLAYA
	82720B70A00-CUP	1	C/TAPICERIA,L/I	TRIM ASSY,L/H	ENS. GARNITURE,C/G	CUP-I
	83720-84C00	1	C/TAPIC.VINILO,L/I	VINYL TRIM ASSY,L/H	ENS.GARNIT.VINYLE,CG	T3
	83720E70A00-K59	1	C/TAPIC.TELA,L/I	MATERIAL TRIM ASS.LH	ENS.GARNITU.TISSU,CG	T2,T3-'V'
	83720F70A00-L46	1	C/TAPIC.VINILO,L/I	VINYL TRIM ASSY,L/H	ENS.GARNIT.VINYLE,CG	T2,T3-'J'
	83720G70A00	1	C/TAPIC.TELA,L/I	MATERIAL TRIM ASS.LH	ENS.GARNITU.TISSU,CG	T2,T3-'V'-ALTERN.
	83720H70A00	1	C/TAPIC.VINILO,L/I	VINYL TRIM ASSY,L/H	ENS.GARNIT.VINYLE,CG	T2,T3-'J'-ALTERN.
2	51160-00000	1	C/TAPIC.VINILO,L/D	VINYL TRIM ASSY,R/H	ENS.GARNIT.VINYLE,CD	T1-'GREY HUELLA'
	52323-00000	1	C/TAPIC.TELA,L/D	MATERIAL TRIM ASS.RH	ENS.GARNITU.TISSU,CD	PLAYA
	82710B70A00-CUP	1	C/TAPICERIA,L/D	TRIM ASSY,R/H	ENS. GARNITURE,C/D	CUP-I
	83710-84C00	1	C/TAPIC.VINILO,L/D	VINYL TRIM ASSY,R/H	ENS.GARNIT.VINYLE,CD	T3
	83710E70A00-K59	1	C/TAPIC.TELA,L/D	MATERIAL TRIM ASS.RH	ENS.GARNITU.TISSU,CD	T2,T3-'V'
	83710F70A00-L46	1	C/TAPIC.VINILO,L/D	VINYL TRIM ASSY,R/H	ENS.GARNIT.VINYLE,CD	T2,T3-'J'
	83710G70A00	1	C/TAPIC.TELA,L/I	MATERIAL TRIM ASS.LH	ENS.GARNITU.TISSU,CG	T2,T3-'V'-ALTERN.
	83710H70A00	1	C/TAPIC.VINILO,L/D	VINYL TRIM ASSY,R/H	ENS.GARNIT.VINYLE,CD	T2,T3-'J'-ALTERN.
3	09409-08320	22	CLIP	CLIP	CLIP	

FIG.87

K-06

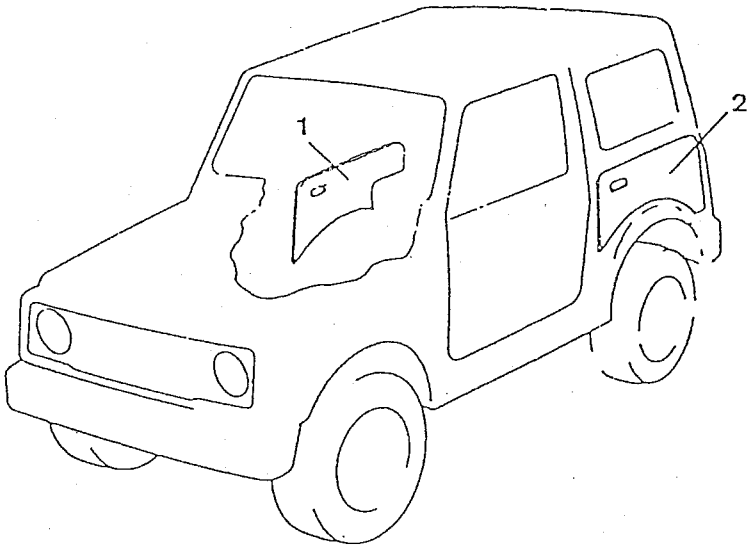

Vehículo V

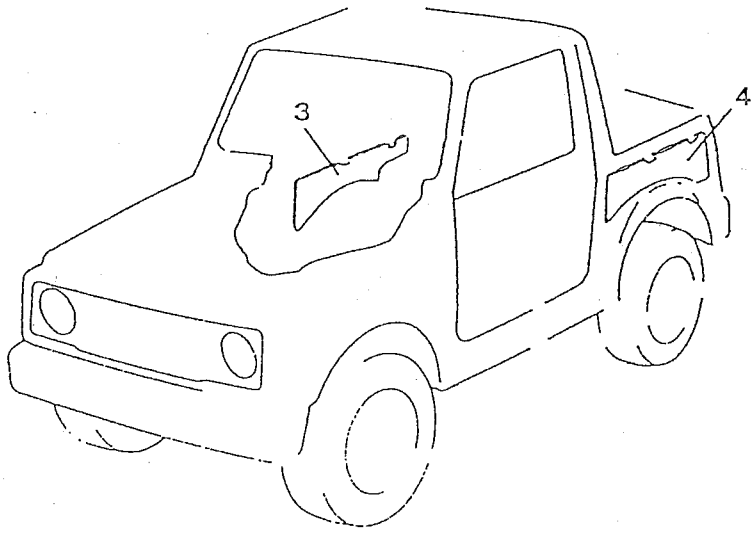

Vehículo J

PUBLICACION N:A01116 GRUPO=TAPICERIA SUBGRUPO=K-06TAPIC.LAT.TRAS.
EDICION N: 1 GROUP=TRIM SUBGROUP=K-06REAR SIDE TRIM
GROUPE=GARNITURE SUBGROUPE=K-06GARNIT.LAT.ARR.

N.FIG PLATE N.FIG	N.PIEZA PARTNUMBER N.PIECE	CAN QTY OUT	DENOMINACION	DESCRIPTION	DENOMINATION	OBSERVACIONES
1	76110A71A00	1	C/TAPIC.VINILO,L/D	VINYL TRIM ASSY,R/H	ENS.GARNIT.VINYLE,CD	T1-GREY
	76110B71A00	1	C/TAPIC.TELA,L/D	MATERIAL TRIM ASS.RH	ENS.GARNITU.TISSU,CD	T1-GREY
	76110G71A00	1	C/TAPIC.TELA,L/D	MATERIAL TRIM ASS.RH	ENS.GARNITU.TISSU,CD	T2
	76110H71A00-5GT	1	C/TAPIC.TELA,L/D	MATERIAL TRIM ASS.RH	ENS.GARNITU.TISSU,CD	T3
2	76120A71A00	1	C/TAPIC.VINILO,L/I	VINYL TRIM ASSY,L/H	ENS.GARNIT.VINYLE,CG	T1-GREY
	76120B71A00	1	C/TAPIC.TELA,L/I	MATERIAL TRIM ASS.LH	ENS.GARNITU.TISSU,CG	T1-GREY
	76120G71A00	1	C/TAPIC.TELA,L/I	MATERIAL TRIM ASS.LH	ENS.GARNITU.TISSU,CG	T2
	76120I71A00-5GT	1	C/TAPIC.TELA,L/I	MATERIAL TRIM ASS.LH	ENS.GARNITU.TISSU,CG	T3
3	76110-83000	1	C/TAPIC.VINILO,L/D	VINYL TRIM ASSY,R/H	ENS.GARNIT.VINYLE,CD	T1-GREY
	76110B83000-5GT	1	C/TAPIC.VINILO,L/D	VINYL TRIM ASSY,R/H	ENS.GARNIT.VINYLE,CD	T2,T3
4	52665-00000-5GT	1	C/TAPIC.VINILO,L/I	VINYL TRIM ASSY,L/H	ENS.GARNIT.VINYLE,CG	T3
	76120-83000	1	C/TAPIC.VINILO,L/I	VINYL TRIM ASSY,L/H	ENS.GARNIT.VINYLE,CG	T1-GREY
	76120B83000-5GT	1	C/TAPIC.VINILO,L/I	VINYL TRIM ASSY,L/H	ENS.GARNIT.VINYLE,CG	T2
5	08409A08303	13	CLIP TAPICERIA	TRIM CLIP	CLIP GARNITURE	T3-'J'
	09409A08303	13/16	CLIP TAPICERIA	TRIM CLIP	CLIP GARNITURE	'J'/'V'

FIG.88

K-07

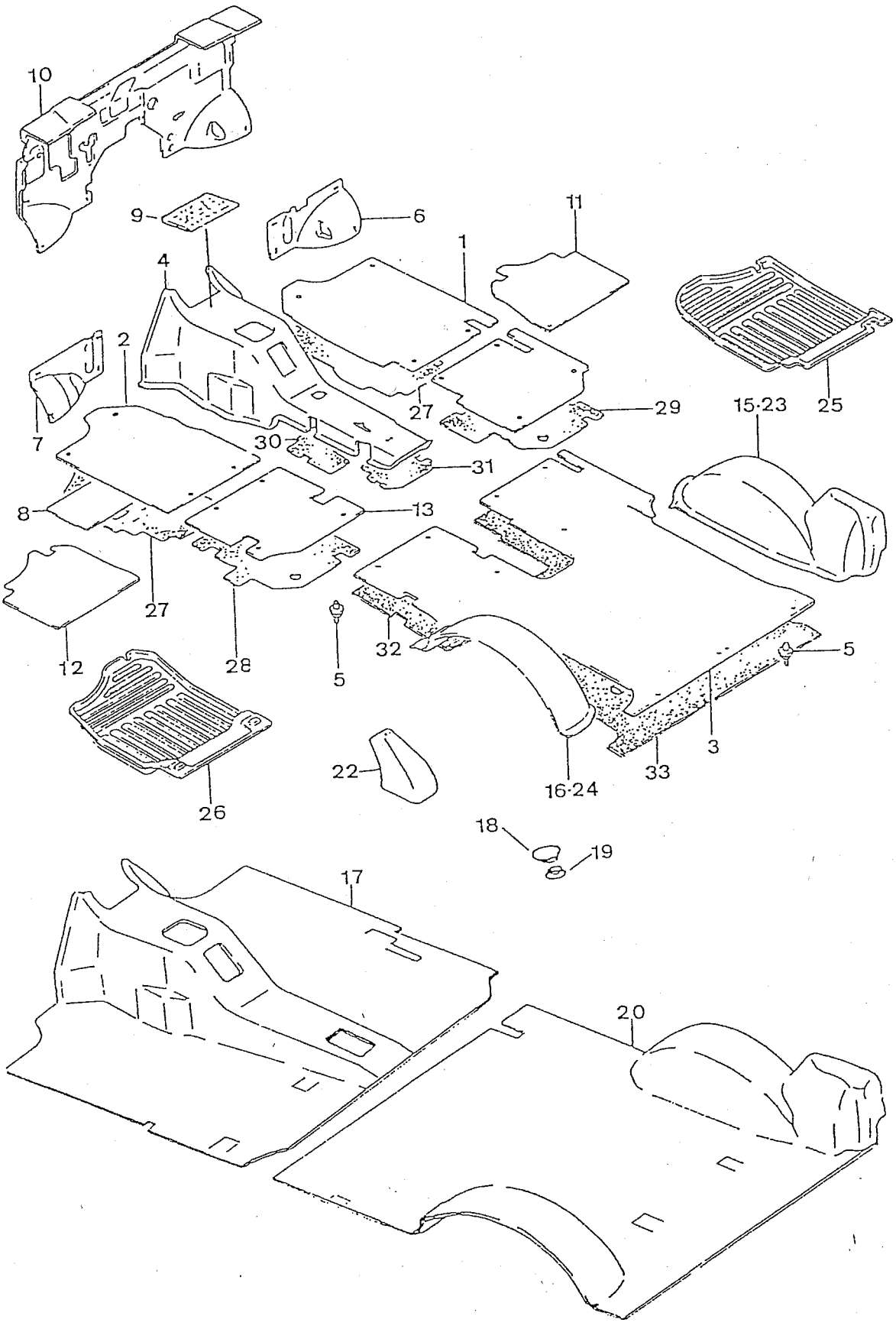
10
9
6
11
1
4
2
7
27
29
15·23
25
30
31
8
13
27
12
28
5
32
5
3
22
33
16·24
26
18
19
17
20

PUBLICACION N:A01116 GRUPO=TAPICERIA SUBGRUPO=K-07MOQUET./ESTERA
EDICION N: 1 GROUP=TRIM SUBGROUP=K-07MOQUET./CARPET
GROUPE=GARNITURE SUBGROUPE=K-07MOQUETTE/TAPIS

N.FIG PLATE N.FIG	N.PIEZA PARTNUMBER N.PIECE	CAN QTY OUT	DENOMINACION	DESCRIPTION	DENOMINATION	OBSERVACIONES
1	52026-00000	1	C/ESTERILLA DEL.L/D	FRONT MAT ASSY,R/H	ENS.TAPIS AV.C/D	
2	52028-00000	1	C/ESTERILLA DEL.L/I	FRONT MAT ASSY,L/H	ENS.TAPIS AV.C/G	
3	52031-00000	1	C/ESTERILL.PISO TRAS	REAR FLOOR MAT ASSY	ENS.TAPIS ETAGE ARR.	
4	52030-00000	1	C/ESTERILLA TUNEL	TUNEL MAT ASSY	ENS.TAPIS TUNEL	
5	09410-00067	20	FIJADOR ALFOMBRA	MAT FASTENING	FIXATION TAPIS	
6	75211A83010	1	AISL.PANEL SALP.L/D	BOARD INSULANT,R/H	ISOLANT TAB.BORD,C/D	GREY
7	75221A83010	1	AISL.PANEL SALP.L/I	BOARD INSULANT,L/H	ISOLANT TAB.BORD,C/G	GREY
8	75231-80000	1	FORRO PISO DEL.L/I	FR.FLOOR LINING,L/H	TISSU ETAGE AV.C/G	
9	28381B83000	1	ETIQUETA USO PALANCA	LEVER USE LABEL	ETIQUETT.USAG.LEVIER	
10	75240A83012	1	C/PANEL AISL.DEL.	FR.INSUL.PANEL ASSY	ENS.PANNEAU ISOL.AV.	'V'
11	75250-83001	1	C/AISL.PISO FRONT.LD	FR.FLOOR INS.ASSY,RH	ENS.ISOL.ETAG.AV.C/D	'V'
12	75260-83001	1	C/AISL.PISO FRONT.LI	FR.FLOOR INS.ASSY,LH	ENS.ISOL.ETAG.AV.C/G	'V'
13	52033-00000	1	C/ESTERI.INTERM.L/I	INTERM.MAT ASSY,L/H	ENS.TAPIS INTERM.C/G	
15	75530C83002-5JP	1	C/ESTER.PASO RUED.LD	WH.BYPASS MAT ASS.RH	ENS.TAPIS PAS.ROUE,D	T2,T3
16	75540C83002-5JP	1	C/ESTER.PASO RUED.LI	WH.BYPASS MAT ASS.LH	ENS.TAPIS PAS.ROUE,G	T2,T3
17	50954-00000	1	C/MOQUET.DEL.C/FORMA	FITTED FR.CARPET ASS	ENS.MOQUETTE FORMEE	
	50954-00000-5JR	1	C/MOQUET.DEL.C/FORMA	FITTED FR.CARPET ASS	ENS.MOQUETTE FORMEE	
18	75115-80000	22	RETENCION (MOQUETA)	RETAINING (CARPET)	RETENUE (MOQUETTE)	T3
	75115A80000-5PK	22	RETENCION HEMBRA N.1	FEMALE RETAINER N.1	RETENUE FEMELLE N.1	T1,T2
19	75116-80000	22	RETENCION MACHO N.2	MALE RETAINER N.2	RETENUE MALE N.2	
20	50958-00000-5JR	1	C/MOQUET.TRAS.C/FORM	FITTED RR CARPET ASS	ENS.MOQ.ARR.FORMEE	
	50960-00000	1	C/MOQUET.TRAS.C/FORM	FITTED RR CARPET ASS	ENS.MOQ.ARR.FORMEE	GREY
21	75530E83002-5JP	1	C/ESTER.CUBIERT.BOCA	NECK COVER MAT ASSY	ENS.TAPIS COUV.ENTRE	T1,T2
22	75190-83010	1	GUARDAPOLVOS	BOOT	PARE-POUSSIERES	GREY
23	51514-00000	1	C/MOQUETA RUEDA,L/D	WHEEL CARPET ASSY,RH	ENS.MOQUETTE ROUE,CD	GREY
24	51516-00000	1	C/MOQUETA RUEDA,L/I	WHEEL CARPET ASSY,LH	ENS.MOQUETTE ROUE,CG	GREY
25	75511-83031-5PK	1	BANDEJA PISO DEL.L/D	FRONT FLOOR TRAY,R/H	PLATEAU ETAGE AV.C/D	
26	75521-83002-5PK	1	BANDEJA PISO DEL.L/I	FRONT FLOOR TRAY,L/H	PLATEAU ETAGE AV.C/G	
27	75311-57C00	2	LAMINA AISL.PISO DEL	FR.FLOOR INSUL.PLATE	PLAQUE ISOL.ETAGE AV	
28	75321-57C00	1	LAMINA AISL.CENT.N.1	CENT.INSUL.PLATE,N.1	PLAQUE ISOL.CENT.N.1	
29	75322-57C00	1	LAMINA AISL.CENT.N.2	CENT.INSUL.PLATE,N.2	PLAQUE ISOL.CENT.N.2	
30	75331-57C00	1	LAMIN.AISL.DEL.TUNEL	TUNEL FR.INSUL.PLATE	PLAQUE ISOL.AV.TUNEL	
31	75332-57C00	1	LAMIN.AIS.TRAS.TUNEL	TUNEL RR.INSUL.PLATE	PLAQUE ISO.ARR.TUNEL	
32	75341A57C00	1	LAM.AIS.DEL.PISO TRA	RR FLOOR FR.INS.PLAT	PLAQ.ISO.ARR.ETAG.AR	'V'
33	75342A57C00	1	LAM.AIS.TRA.PISO TRA	RR FLOOR RR.INS.PLAT	PLAQ.ISO.ARR.ETAG.AR	'V'

GRUPO 11 ASIENTOS

GROUP 11 SEATS

GROUP 11 SIEGES

COMPOSICION.....COMPOSITION.....COMPOSICION

REFERENCIA PARTNUMBER NUM.PIECE	DENOMINACION	DESCRIPTION	DENOMINATION
411089	L-02ASIENTO DEL.	L-02FRONT SEAT	L-02SIEGE AVANT
411089.1	L-02.1ASIENTO DEL.	L-02.1FRONT SEAT	L-02.1SIEGE AVANT
411089.2	L-02.2ASIENTO DEL.	L-02.2FROT SEAT	L-02.2SIEGE AVANT
411090	L-03ASIENTO TRAS.	L-03REAR SEAT	L-03SIEGE ARRIERE
411090.1	L-03.1ASIENTO TRAS.	L-03.1REAR SEAT	L-03.1SIEGE ARRIERE
411091	L-04CINTURON SEGUR.	L-04SAFETY BELT	L-04CEINTURE SECUR.

FIG.89

L-02

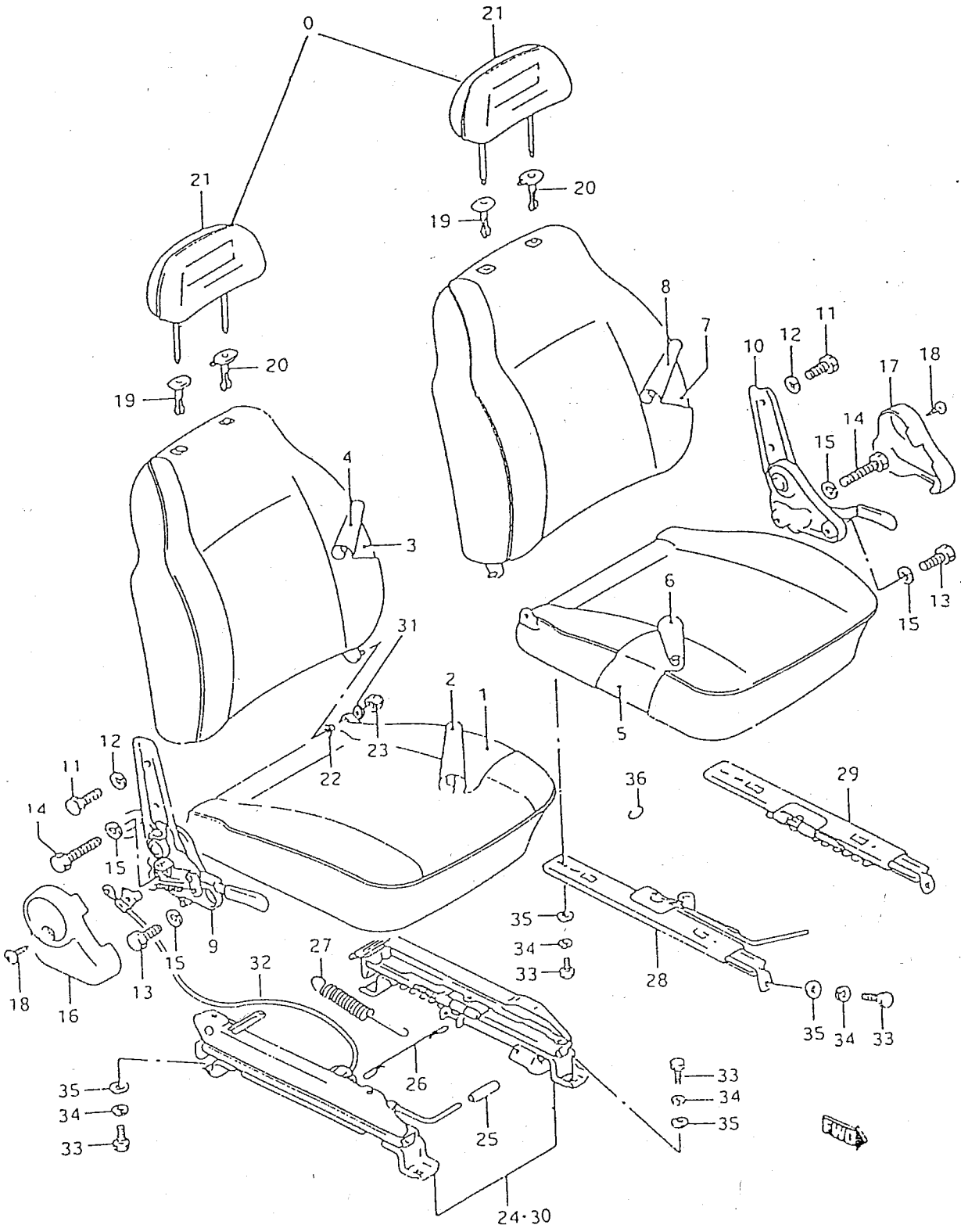

0
21
21
20
19
20
19
8
7
10
12
11
17
18
14
15
4
3
6
13
15
31
2
1
5
12
11
23
22
36
29
14
15
9
35
34
33
28
18
16
13
15
32
27
35
34
33
26
35
34
33
33
34
35
25
24·30

PUBLICACION N:A01116 GRUPO=ASIENTOS SUBGRUPO=L-02ASIENTO DEL.
EDICION N: 1 GROUP=SEATS SUBGROUP=L-02FRONT SEAT
GROUPE=SIEGES SUBGROUPE=L-02SIEGE AVANT

N.FIG PLATE N.FIG	N.PIEZA PARTNUMBER N.PIECE	CAN QTY OUT	DENOMINACION	DESCRIPTION	DENOMINATION	OBSERVACIONES
	51162-00000	1	C/ASIENTO L/D,VINILO	SEAT ASSY R/H,VINYL	ENS.SIEGE CD,VINYLE	T1,'GREY HUELLA'
	51173-00000	1	C/ASIENTO L/I,VINILO	SEAT ASSY L/H,VINYL	ENS.SIEGE CG,VINYLE	T1,'GREY HUELLA'
	85001-72A01-L45	1	C/ASIENTO L/D,VINILO	SEAT ASSY R/H,VINYL	ENS.SIEGE CD,VINYLE	T2
	85001-72A10-K58	1	C/ASIENTO L/D,TELA	SEAT ASSY R/H,MATER.	ENS.SIEGE C/D,TISSU	T2
	85001-84C00-L45	1	C/ASIENTO L/D,VINILO	SEAT ASSY R/H,VINYL	ENS.SIEGE CD,VINYLE	T3
	85001A72A01	1	C/ASIENTO L/D,TELA	SEAT ASSY R/H,MATER.	ENS.SIEGE C/D,TISSU	T1-'GREY SAMURAI'
	85001A72A01-CUP	1	C/ASIENTO L/D	SEAT ASSY R/H	ENS.SIEGE C/D	CUP-I
	85001B72A10	1	C/ASIENTO L/D	SEAT ASSY R/H	ENS.SIEGE C/D	PLAYA
	85002-70A01-K58	1	C/ASIENTO L/I,VINILO	SEAT ASSY L/H,VINYL	ENS.SIEGE CG,VINYLE	T2
	85002-70A10-MCH	1	C/ASIENTO L/I,TELA	SEAT ASSY L/H,MATER	ENS.SIEGE C/G,TISSU	T2
	85002-84C00	1	C/ASIENTO L/I,VINILO	SEAT ASSY L/H,VINYL	ENS.SIEGE CG,VINYLE	T3
	85002A70A01	1	C/ASIENTO L/I,TELA	SEAT ASSY L/H,MATER	ENS.SIEGE C/G,TISSU	T1-'GREY SAMURAI'
	85002A72A01-CUP	1	C/ASIENTO L/I	SEAT ASSY L/H	ENS.SIEGE C/G	CUP-I
	85002B70A10	1	C/ASIENTO L/I	SEAT ASSY L/H	ENS.SIEGE C/G	PLAYA
1	51163-00000	1	C/COJIN L/D,VINILO	CUSHION ASS.RH,VINYL	ENS.COUSSIN CD,VINYL	T1,'GREY HUELLA'
	51860-00000	1	C/COJIN L/D	CUSHION ASSY,R/H	ENS.COUSSIN,C/D	PLAYA
	85101-83000-L45	1	C/COJIN L/D,VINILO	CUSHION ASS.RH,VINYL	ENS.COUSSIN CD,VINYL	T2
	85101-83100-K58	1	C/COJIN L/D,TELA	CUSHION ASS.RH,MATER	ENS.COUSSIN CD,TISSU	T2
	85101B83000	1	C/COJIN L/D,TELA	CUSHION ASS.RH,MATER	ENS.COUSSIN CD,TISSU	T1-'GREY SAMURAI'
	85101B83000-CUP	1	C/COJIN L/D	CUSHION ASSY,R/H	ENS.COUSSIN,C/D	CUP-I
	85200-84C00-L45	1	C/COJIN L/D,VINILO	CUSHION ASS.RH,VINYL	ENS.COUSSIN CD,VINYL	T3
2	51164-00000	1	TAPIC.COJIN LD,VINIL	CUSH.TRIM,R/H,VINYL	GARNI.COUSS.CD,VINYL	T1-'GREY HUELLA'
	51861-00000	1	TAPIC.COJIN L/D	CUSH.TRIM,R/H	GARNI.COUSSIN,C/D	PLAYA
	85180-83000-L45	1	TAPIC.COJIN LD,VINIL	CUSH.TRIM,R/H,VINYL	GARNI.COUSS.CD,VINYL	T2
	85180-83100-K58	1	TAPIC.COJIN L/D,TELA	CUSH.TRIM,R/H,MATER.	GARNI.COUSS.CD,TISSU	T2
	85180B83000	1	TAPIC.COJIN L/D,TELA	CUSH.TRIM,R/H,MATER.	GARNI.COUSS.CD,TISSU	T1-'GREY SAMURAI'
	85180B83000-CUP	1	TAPIC.COJIN L/D	CUSH.TRIM,R/H	GARNI.COUSSIN,C/D	CUP-I
	85210-84C00-L45	1	TAPIC.COJIN LD,VINIL	CUSH.TRIM,R/H,VINYL	GARNI.COUSS.CD,VINYL	T3
3	51168-00000	1	C/RESPALDO L/D,VINIL	BACK ASSY R/H,VINYL	ENS.DOSSIER CD,VINYL	T1-'GREY HUELLA'
	51862-00000	1	C/RESPALDO L/D	BACK ASSY R/H	ENS.DOSSIER C/D	PLAYA
	85100-84C00-L45	1	C/RESPALDO L/D,VINIL	BACK ASSY R/H,VINYL	ENS.DOSSIER CD,VINYL	T3
	85301-83172-L45	1	C/RESPALDO L/D,VINIL	BACK ASSY R/H,VINYL	ENS.DOSSIER CD,VINYL	T2
	85301-83201-K58	1	C/RESPALDO L/D,TELA	BACK ASSY R/H,MATER.	ENS.DOSSIER CD,TISSU	T2
	85301A83172	1	C/RESPALDO L/D,TELA	BACK ASSY R/H,MATER.	ENS.DOSSIER CD,TISSU	T1-'GREY SAMURAI'
	85301A83172-CUP	1	C/RESPALDO L/D	BACK ASSY R/H	ENS.DOSSIER C/D	CUP-I

FIG.89.1

L-02.1

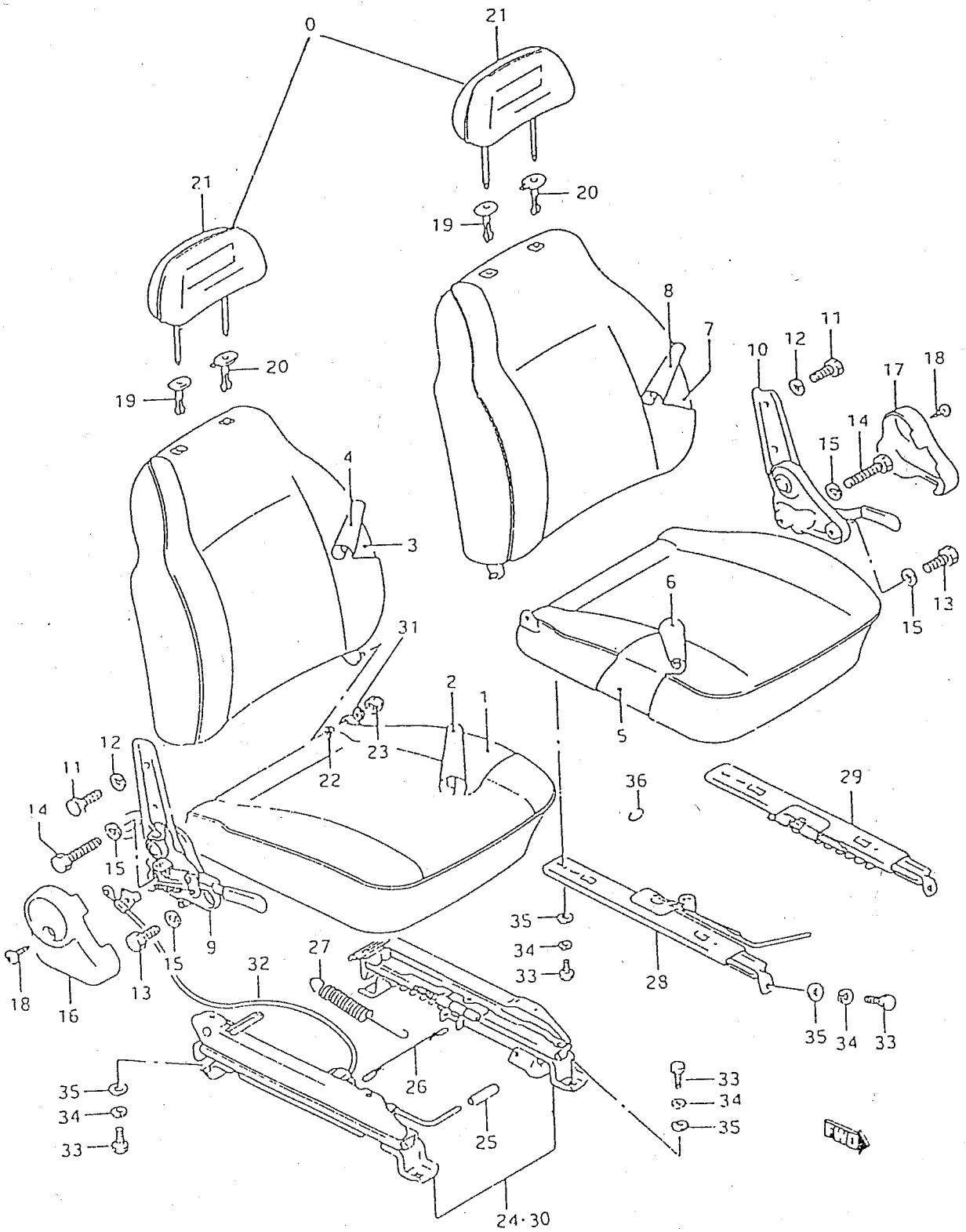
0
21
21
20
19
20
19
8
7
10
12
11
17
18
14
15
4
3
6
13
15
31
2
1
23
22
5
12
11
14
15
36
29
35
34
33
28
35
34
33
18
16
13
15
9
32
27
26
25
35
34
33
33
34
35
24·30

PUBLICACION N:A01116 GRUPO=ASIENTOS SUBGRUPO=L-02.1ASIENTO DEL.
EDICION N: 1 GROUP=SEATS SUBGROUP=L-02.1FRONT SEAT
GROUPE=SIEGES SUBGROUPE=L-02.1SIEGE AVANT

N.FIG PLATE N.FIG	N.PIEZA PARTNUMBER N.PIECE	CAN QTY OUT	DENOMINACION	DESCRIPTION	DENOMINATION	OBSERVACIONES
4	51169-00000	1	TAPIC.RESP.LD,VINILO	BACK TRIM R/H,VINYL	GARNI.DOSS.CD,VINYLE	T1-'GREY HUELLA'
	51863-00000	1	TAPIC.RESP.L/D	BACK TRIM R/H	GARNI.DOSS.C/D	PLAYA
	85110-84C00-L45	1	TAPIC.RESP.LD,VINILO	BACK TRIM R/H,VYNIL	GARNI.DOSS.CD,VINYLE	T3
	85380-83001-L45	1	TAPIC.RESP.LD,VINILO	BACK TRIM R/H,VYNIL	GARNI.DOSS.CD,VINYLE	T2
	85380-83100-K58	1	TAPIC.RESP.LD,TELA	BACK TRIM R/H,MATER.	GARNI.DOSS.CD,TISSU	T2
	85380A83001	1	TAPIC.RESP.LD,TELA	BACK TRIM R/H,MATER.	GARNI.DOSS.CD,TISSU	T1-'GREY SAMURAI'
	85380A83001-CUP	1	TAPIC.RESP.L/D	BACK TRIM R/H	GARNI.DOSS.C/D	CUP-I
5	51174-00000	1	C/COJIN L/I,VINILO	CUSHION ASS.LH,VINYL	ENS.COUSSIN CG,VINYL	T1-'GREY HUELLA'
	51864-00000	1	C/COJIN L/I	CUSHION ASSY L/H	ENS.COUSSIN C/G	PLAYA
	85102-83000-L45	1	C/COJIN L/I,VINILO	CUSHION ASS.LH,VINYL	ENS.COUSSIN CG,VINYL	T2
	85102-83000-T1	1	C/COJIN L/I,TELA	CUSHION ASS.LH,MATER	ENS.COUSSIN CG,TISSU	T1-'GREY SAMURAI'
	85102-83100-MCH	1	C/COJIN L/I,TELA	CUSHION ASS.LH,MATER	ENS.COUSSIN CG,TISSU	T2
	85102B83000-CUP	1	C/COJIN L/I	CUSHION ASSY L/H	ENS.COUSSIN C/G	CUP-I
	85700-84C00-L45	1	C/COJIN L/I,VINILO	CUSHION ASS.LH,VINYL	ENS.COUSSIN CG,VINYL	T3
6	51175-00000	1	TAPIC.COJIN LI,VINIL	CUSH.TRIM,L/H,VINYL	GARNI.COUSS.CG,VINYL	T1-'GREY HUELLA'
	51865-00000	1	TAPIC.COJIN L/I	CUSH.TRIM L/H	GARNI.COUSS.C/G	PLAYA
	85680-83000-L45	1	TAPIC.COJIN LI,VINIL	CUSH.TRIM LH,VINYL	GARNI.COUSS.CG,VINYL	T2
	85680-83000-T1	1	TAPIC.COJIN LI,TELA	CUSH.TRIM LH,MATER.	GARNI.COUSS.CG,TISSU	T1-'GREY SAMURAI'
	85680-83100-K58	1	TAPIC.COJIN LI,TELA	CUSH.TRIM LH,MATER.	GARNI.COUSS.CG,TISSU	T2
	85680B83000-CUP	1	TAPIC.COJIN L/I	CUSH.TRIM L/H	GARNI.COUSS.C/G	CUP-I
	85710-84C00-L45	1	TAPIC.COJIN LI,VINIL	CUSH.TRIM,L/H,VINYL	GARNI.COUSS.CG,VINYL	T3
7	51176-00000	1	C/RESPALDO L/I,VINIL	BACK ASSY L/H,VINYL	ENS.DOSSIER CG,VINYL	T1-'GREY HUELLA'
	51866-00000	1	C/RESPALDO L/I	BACK ASSY L/H	ENS.DOSSIER C/G	PLAYA
	85302-83220-T1	1	C/RESPALDO L/I,TELA	BACK ASSY L/H,MATER.	ENS.DOSSIER CG,TISSU	T1-'GREY SAMURAI'
	85302-83221-L45	1	C/RESPALDO L/I,VINIL	BACK ASSY L/H,VINYL	ENS.DOSSIER CG,VINYL	T2
	85302-83300-K58	1	C/RESPALDO L/I,TELA	BACK ASSY L/H,MATER.	ENS.DOSSIER CG,TISSU	T2
	85302A83221-CUP	1	C/RESPALDO L/I	BACK ASSY L/H	ENS.DOSSIER C/G	CUP-I
	85600-84C00-L45	1	C/RESPALDO L/I,VINIL	BACK ASSY L/H,VINYL	ENS.DOSSIER CG,VINYL	T3
8	51177-00000	1	TAPIC.RESP.LI,VINILO	BACK TRIM L/H,VINYL	GARNI.DOSS.CG,VINYLE	T1-'GREY HUELLA'
	51867-00000	1	TAPIC.RESP.L/I	BACK TRIM L/H	GARNI.DOSS.C/G	PLAYA
	85610-84C00-L45	1	TAPIC.RESP.LI,VINILO	BACK TRIM L/H,VINYL	GARNI.DOSS.CG,VINYLE	T3
	85880-83000-T1	1	TAPIC.RESP.LI,TELA	BACK TRIM L/H,MATER.	GARNI.DOSS.CG,TISSU	T1-'GREY SAMURAI'
	85880-83001-L45	1	TAPIC.RESP.LI,VINILO	BACK TRIM L/H,VINYL	GARNI.DOSS.CG,VINYLE	T2
	85880-83100-K58	1	TAPIC.RESP.LI,TELA	BACK TRIM L/H,MATER.	GARNI.DOSS.CG,TISSU	T2
	85880A83001-CUP	1	TAPIC.RESP.L/I	BACK TRIM L/H	GARNI.DOSS.C/G	CUP-I
9	85210-83001-5PK	1	RECLINADOR,L/D	RECLINING ASSY,R/H	REGLAGE DOSSIER,C/D	
10	85710-80290-5PK	1	RECLINADOR,L/I	RECLINING ASSY,L/H	REGLAGE DOSSIER,C/G	
11	01107-08163	4	TORNILLO	SCREW	VIS	
12	01107-06166	4	TORNILLO	SCREW	VIS	
13	08321A31066	4	ARANDELA GROWER	GROWER WASHER	RONDELLE GROWER	
14	08322-21066	4	ARANDELA PLANA	FLAT WASHER	RONDELLE PLATE	

FIG.89.2

L-02.2

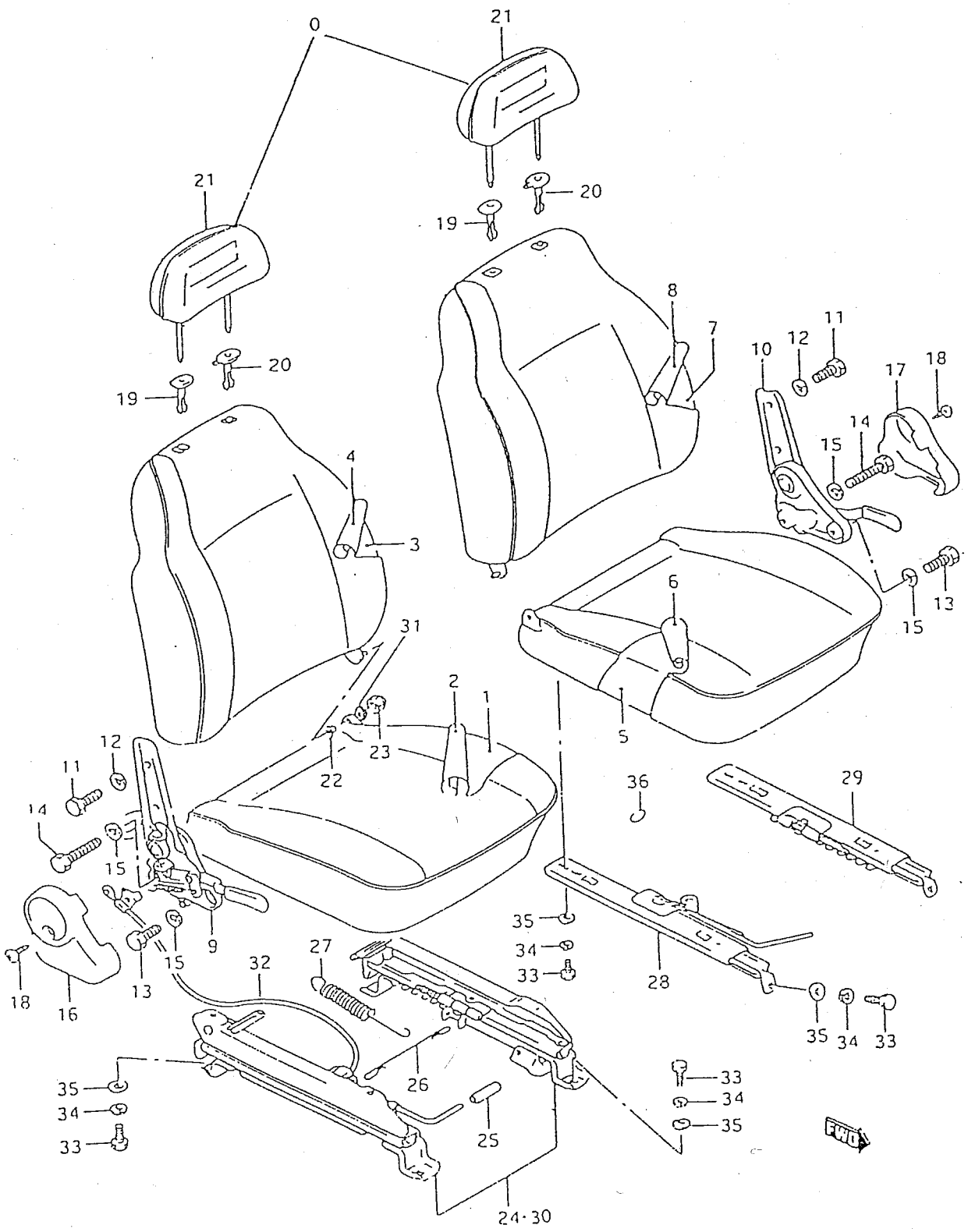

0
21
21
20
19
20
19
8
7
10
12
11
17
18
14
15
4
3
6
13
15
31
2
1
5
12
11
23
22
36
29
14
15
9
35
34
33
28
18
16
13
15
32
27
35
34
33
26
35
34
33
33
34
35
25
24·30

PUBLICACION N:A01116 GRUPO=ASIENTOS SUBGRUPO=L-02.2ASIENTO DEL.
EDICION N: 1 GROUP=SEATS SUBGROUP=L-02.2FROT SEAT
GROUPE=SIEGES SUBGROUPE=L-02.2SIEGE AVANT

N.FIG PLATE N.FIG	N.PIEZA PARTNUMBER N.PIECE	CAN QTY OUT	DENOMINACION	DESCRIPTION	DENOMINATION	OBSERVACIONES
15	08321A31106	4	ARANDELA MUELLE	SPRING WASHER	RONDELLE PLATE	
16	85221-82001-5ES	1	TAPA,L/D	COVER,R/H	COUVERCLE,C/D	'J'
	85221A82001-5ES	1	TAPA L/D,GRIS	GREY COVER,R/H	COUVERCLE GRIS,C/D	
17	85721-82001-5ES	1	TAPA,L/I	COVER,L/H	COUVERCLE,C/G	'J'
	85721A82001-5ES	1	TAPA L/I	COVER,L/H	COUVERCLE,C/G	
18	03241-05125	2	TORNILLO TAPA	COVER SCREW	VIS COUVERCLE	
19	85391-80290	2	GUIA APOYACABEZA,L/D	HEADREST GUIDE,R/H	GUIDE APPUI-TETE,C/D	
20	85890-83000	2	GUIA APOYACABEZA,L/I	HEADREST GUIDE,L/H	GUIDE APPUI-TETE,C/G	
21	86401-70A00-5GU	2	APOYACABEZA	HEADREST	APPUI-TETE	
	86401370A00	2	APOYACABEZA GRIS	GREY HEADREST	APPUI-TETE GRIS	
22	85291-80290	2	CASQUILLO NYLON	NYLON BUSH	BAGUE NYLON	
23	08313A11085	2	TUERCA	NUT	ECROU	
24	86720-83030	1	DESLIZ.ASIEN.EXT.L/D	OUT.SEAT SLID.GUI.RH	GLISSIER.SIEG.EXT.CD	
25	86736-83000	1	PROTECTOR MANDO	CONTROL PROTECTOR	PROTECTEUR COMMANDE	
26	86731-83000	1	TIRANTE	STAY	TIGE	
27	86732-83030	1	MUELLE	SPRING	RESSORT	
28	51789-00000	1	DESLIZ.ASIEN.INT.L/I	IN.SEAT SLID.GUID.LH	GLISSIER.SIEG.INT.CG	
29	51790-00000	1	DESLIZ.ASIEN.EXT.L/I	OUT.SEAT SLID.GUI.LH	GLISSIER.SIEG.EXT.CG	
30	86710-83030	1	DESLIZ.ASIEN.INT.L/D	IN.SEAT SLID.GUID.RH	GLISSIER.SIEG.INT.CD	
31	08322-11085	2	ARANDELA	WASHER	RONDELLE	
32	87470-83000	1	C/CABLE RECLINADOR	RECLINING CABLE ASSY	ENS.CABLE REGL.DOSS.	
33	01107-06166	4	TORNILLO	SCREW	VIS	
34	01107-08206	8	TORNILLO	SCREW	VIS	
	08321A31086	8	ARANDELA GROWER	GROWER WASHER	RONDELLE GROWER	
	08322-11086	8	ARANDELA PLANA	FLAT WASHER	RONDELLE PLANA	
35	08322-21066	8	ARANDELA PLANA	FLAT WASHER	RONDELLE PLATE	
36	08010-00000	1	CLIP RETENCION	RETAINING CLIP	CLIP RETENUE	

FIG.90

L-03

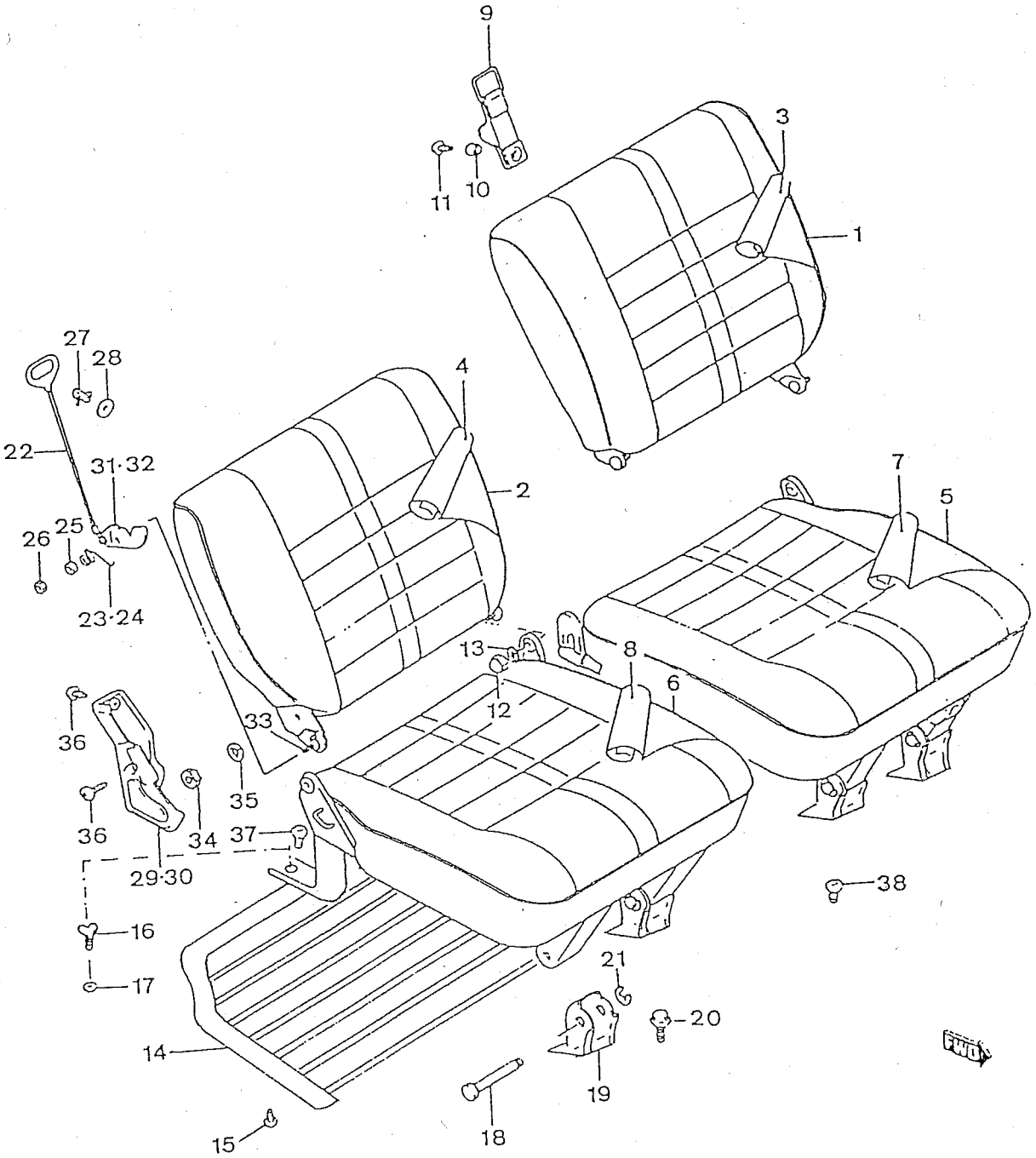
9
11
10
3
1
27
28
4
22
31·32
2
7
5
26
25
23·24
13
8
6
12
33
36
35
36
34
37
29·30
38
16
17
21
20
14
19
18
15
FWD

PUBLICACION N:A01116 GRUPO=ASIENTOS SUBGRUPO=L-03ASIENTO TRAS.
EDICION N: 1 GROUP=SEATS SUBGROUP=L-03REAR SEAT
GROUPE=SIEGES SUBGROUPE=L-03SIEGE ARRIERE

N.FIG PLATE N.FIG	N.PIEZA PARTNUMBER N.PIECE	CAN QTY OUT	DENOMINACION	DESCRIPTION	DENOMINATION	OBSERVACIONES
	51237-00000-ARA	1	C/ASIENTO LD,VINILO	SEAT ASSY RH,VINYL	ENS.SIEGE CD,VINYLE	T1-'GREY HUELLA'
	51251-00000-ARA	1	C/ASIENTO LI,VINILO	SEAT ASSY LH,VINYL	ENS.SIEGE CG,VINYLE	T1-'GREY HUELLA'
	51259-00000-ARA	1	C/ASIENTO LI,TELA	SEAT ASSY LH,MATER.	ENS.SIEGE CG,TISSU	T1-'GREY SAMURAI'
	51850-00000	1	C/ASIENTO LD,TELA	SEAT ASSY RH,MATER.	ENS.SIEGE CD,TISSU	T1-'GREY SAMURAI'
	52605-00000	1	C/ASIENTO LD,VINILO	SEAT ASSY RH,VINYL	ENS.SIEGE CD,VINYLE	T2
	52612-00000	1	C/ASIENTO LI,VINILO	SEAT ASSY LH,VINYL	ENS.SIEGE CG,VINYLE	T2
	52619-00000	1	C/ASIENTO LD,TELA	SEAT ASSY RH,MATER.	ENS.SIEGE CD,TISSU	T2
	52626-00000	1	C/ASIENTO LI,TELA	SEAT ASSY LH,MATER.	ENS.SIEGE CG,TISSU	T2
	87001-84C00-L45	1	C/ASIENTO LD,VINILO	SEAT ASSY RH,VINYL	ENS.SIEGE CD,VINYLE	T3
	87002-84C00-L45	1	C/ASIENTO LI,VINILO	SEAT ASSY LH,VINYL	ENS.SIEGE CG,VINYLE	T3
1	51279-00000	1	C/RESPALDO LI,VINILO	BACK ASSY LH,VYNIL	ENS.DOSSIER CG,VINYL	T1-'GREY HUELLA'
	51856-00000	1	C/RESPALDO LI,TELA	BACK ASSY LH,MATER.	ENS.DOSSIER CG,TISSU	T1-'GREY SAMURAI'
	52613-00000-L45	1	C/RESPALDO LI,VINILO	BACK ASSY LH,VINYL	ENS.DOSSIER CG,VINYL	T2
	52627-00000-K58	1	C/RESPALDO LI,TELA	BACK ASSY LH,MATER.	ENS.DOSSIER CG,TISSU	T2
	87500-84C00	1	C/RESPALDO LI,VINILO	BACK ASSY LH,VINYL	ENS.DOSSIER CG,VINYL	T3
2	51265-00000	1	C/RESPALDO LD,VINILO	BACK ASSY RH,VINYL	ENS.DOSSIER CD,VINYL	T1-'GREY HUELLA'
	51851-00000	1	C/RESPALDO LD,TELA	BACK ASSY RH,MATER.	ENS.DOSSIER CD,VINYL	T1-'GREY SAMURAI'
	52606-00000-L45	1	C/RESPALDO LD,VINILO	BACK ASSY RH,VINYL	ENS.DOSSIER CD,VINYL	T2
	52620-00000-K58	1	C/RESPALDO LD,TELA	BACK ASSY RH,MATER.	ENS.DOSSIER CD,TISSU	T2
	87100-84C00	1	C/RESPALDO LD,VINILO	BACK ASSY RH,VINYL	ENS.DOSSIER CD,VINYL	T3
3	51307-00000	1	TAPIC.RESP.LI,VINILO	BACK TRIM LH,VINYL	GARNI.DOSS.CG,VINYLE	T1-'GREY HUELLA'
	51857-00000	1	TAPIC.RESP.LI,TELA	BACK TRIM LH,MATER.	GARNI.DOSS.CG,TISSU	T1-'GREY SAMURAI'
	52614-00000-L45	1	TAPIC.RESP.LI,VINILO	BACK TRIM LH,VINYL	GARNI.DOSS.CG,VINYLE	T2
	52628-00000-K58	1	TAPIC.RESP.LI,TELA	BACK TRIM LH,MATER.	GARNI.DOSS.CG,TISSU	T2
	87510-84C00	1	TAPIC.RESP.LI,VINILO	BACK TRIM LH,VINYL	GARNI.DOSS.CG,VINYLE	T3
4	51293-00000	1	TAPIC.RESP.LD,VINILO	BACK TRIM RH,VINYL	GARNI.DOSS.CD,VINYLE	T1-'GREY HUELLA'
	51852-00000	1	TAPIC.RESP.LD,TELA	BACK TRIM RH,MATER.	GARNI.DOSS.CD,TISSU	T1-'GREY SAMURAI'
	52607-00000-L45	1	TAPIC.RESP.LD,VINILO	BACK TRIM RH,VINYL	GARNI.DOSS.CD,VINYLE	T2
	52621-00000-K58	1	TAPIC.RESP.LD,TELA	BACK TRIM RH,MATER.	GARNI.DOSS.CD,TISSU	T2
	87110-84C00	1	TAPIC.RESP.LD,VINILO	BACK TRIM RH,VINYL	GARNI.DOSS.CD,VINYLE	T3
5	51363-00000	1	C/COJIN LI,VINILO	CUSH.ASSY LH,VINYL	ENS.COUSSIN CG,VINYL	T1-'GREY HUELLA'
	51858-00000	1	C/COJIN LI,TELA	CUSH.ASSY LH,MATER.	ENS.COUSS.CG,TISSU	T1-'GREY SAMURAI'
	52616-00000-L45	1	C/COJIN LI,VINILO	CUSH.ASSY LH,VINYL	ENS.COUSSIN CG,VINYL	T2
	52630-00000-K58	1	C/COJIN LI,TELA	CUSH.ASSY LH,MATER.	ENS.COUSS.CG,TISSU	T2
	87600-84C00	1	C/COJIN LI,VINILO	CUSH.ASSY LH,VINYL	ENS.COUSSIN CG,VINYL	T3
6	51349-00000	1	C/COJIN LD,VINILO	CUSH.ASSY LD,VINYL	ENS.COUSSIN CD,VINYL	T1-'GREY HUELLA'
	51853-00000	1	C/COJIN LD,TELA	CUSH.ASSY RH,MATER	ENS.COUSS.CD,TISSU	T1-'GREY SAMURAI'
	52609-00000-L45	1	C/COJIN LD,VINILO	CUSH.ASSY RH,VINYL	ENS.COUSSIN CD,VINYL	T2
	52623-00000	1	C/COJIN LD,TELA	CUSH.ASSY RH,MATER.	ENS.COUSS.CD,TISSU	T2
	87200-84C00	1	C/COJIN LD,VINILO	CUSH.ASSY RH,VINYL	ENS.COUSSIN CD,VINYL	T3
7	51188-00000	1	TAPIC.COJIN LI,VINIL	CUSH.TRIM LH,VINYL	GARNI.COUSS.CG,VINYL	T1-'GREY HUELLA'
	51859-00000	1	TAPIC.COJIN LI,TELA	CUSH.TRIM LH,MATER.	GARNI.COUSS.CG,TISSU	T1-'GREY SAMURAI'

FIG.90.1

L-03.1

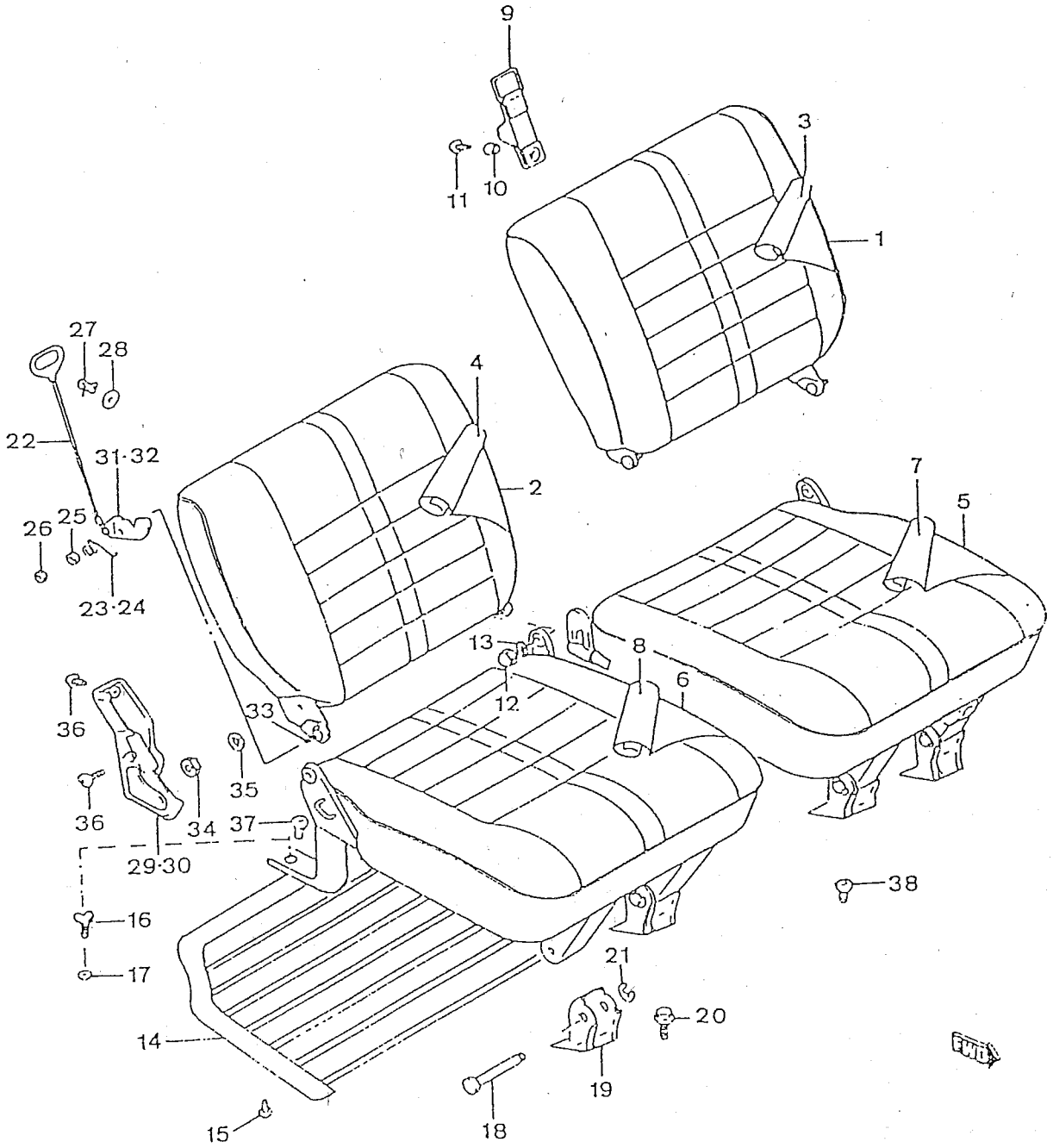
9
11
10
3
1
27
28
22
4
31·32
2
26
25
23·24
7
5
13
8
6
12
33
36
35
36
34
37
29·30
38
16
17
21
20
14
19
18
15

PUBLICACION N:A01116 GRUPO=ASIENTOS SUBGRUPO=L-03.1ASIENTO TRAS.
EDICION N: 1 GROUP=SEATS SUBGROUP=L-03.1REAR SEAT
GROUPE=SIEGES SUBGROUPE=L-03.1SIEGE ARRIERE

N.FIG PLATE N.FIG	N.PIEZA PARTNUMBER N.PIECE	CAN QTY OUT	DENOMINACION	DESCRIPTION	DENOMINATION	OBSERVACIONES
	52617-00000-L45	1	TAPIC.COJIN LI,VINIL	CUSH.TRIM LH,VINYL	GARNI.COUSS.CG,VINYL	T2
	52631-00000	1	TAPIC.COJIN LI,TELA	CUSH.TRIM LH,MATER.	GARNI.COUSS.CG,TISSU	T2
	87610-84C00	1	TAPIC.COJIN LI,VINIL	CUSH.TRIM LH,VINYL	GARNI.COUSS.CG,VINYL	T3
8	51183-00000	1	TAPIC.COJIN LD,VINIL	CUSH.TRIM RH,VINYL	GARNI.COUSS.CD,VINYL	T1-'GREY HUELLA'
	51854-00000	1	TAPIC.COJIN LD,TELA	CUSH.TRIM,RH,MATER.	GARNI.COUSS.CD,TISSU	T1-'GREY SAMURAI'
	52610-00000-L45	1	TAPIC.COJIN LD,VINIL	CUSH.TRIM,RH,VINYL	GARNI.COUSS.CD,VINYL	T2
	52624-00000-K58	1	TAPIC.COJIN LD,TELA	CUSH.TRIM,RH,MATER.	GARNI.COUSS.CD,TISSU	T2
	87210-84C00	1	TAPIC.COJIN LD,VINIL	CUSH.TRIM,RH,VINYL	GARNI.COUSS.CD,VINYL	T3
9	50685-00000	1	CORREA,'J'	BELT,'J'	COURROIE,'J'	
	50686-00000	1	CORREA,'V'	BELT,'V'	COURROIE,'V'	
10	87001F83300	2	CASQUILLO	BUSH	BAGUE	
11	03111-04255	2	TORNILLO	SCREW	VIS	
12	06003-00000	4	REMACHE	RIVET	RIVET	
13	09160-06064	4	ARANDELA PLANA	FLAT WASHER	RONDELLE PLATE	
14	87001B83300-L45	1	FORRO COJIN L/D	CUSHION LINING R/H	TISSU COUSSIN C/D	
	87002B83300-L45	1	FORRO COJIN L/I	CUSHION LINING L/H	TISSU COUSSIN C/G	
15	78248	6	REMACHE	RIVET	RIVET	
16	09119A06007	4	TORNILLO MARIPOSA	BUTTERFLY SCREW	VIS PAPILLON	
17	09160-06020	4	ARANDELA	WASHER	RONDELLE	
18	09208-85C00	4	PASADOR	PIN	CLAVETTE	
19	87110D83300	4	BISAGRA HEMBRA	FEMALE HINGE	CHARNIERE FEMELLE	
20	01517-08166	4	TORNILLO	SCREW	VIS	
21	09148-85C00	4	CIRCLIP	CIRCLIP	CIRCLIP	
22	87214-83000	2	TIRADOR PALANCA	LEVER KNOB	BOUTON LEVIER	
23	83914-73062	1	MUELLE LD	SPRING,R/H	RESSORT CD	
24	83944-73062	1	MUELLE LI	SPRING,L/H	RESSORT CG	
25	87325-83000	2	CASQUILLO	BUSH	BAGUE	
26	08316A16086	2	TUERCA	NUT	ECROU	
27	09403-06403	2	CLIP	CLIP	CLIP	
28	87328-83000	2	ARANDELA	WASHER	RONDELLE	
29	51568-00000-5ES	1	TAPA LD	COVER R/H	COUVERCLE CD	
	51568-00000-5PK	1	TAPA LD	COVER R/H	COUVERCLE CD	
30	51567-00000-5ES	1	TAPA LI	COVER L/H	COUVERCLE CG	
	51567-00000-5PK	1	TAPA LI	COVER L/H	COUVERCLE CG	
31	87212-80200	1	PALANCA LI	LEVER L/H	LEVIER CG	
32	87612-80200	1	PALANCA LD	LEVER R/H	LEVIER CD	
33	51086-00000	2	REMACHE	RIVET	RIVET	
34	08313B11063	8	TUERCA	NUT	ECROU	
35	08322-21066	8	ARANDELA	WASHER	RONDELLE	
36	03241-05085	6	TORNILLO	SCREW	VIS	
37	50464-00000	4	TORNILLO CEGADO TRAS	REAR SCREW	VIS ARRIERE	'J'
38	50463-00000	4	TORNILLO CEGADO DEL.	FRONT SCREW	VIS AVANT	'J'
39	87271A80120	4	BISAGRA MACHO	MALE HINGE	CHARNIERE MALE	

FIG.91

L-04

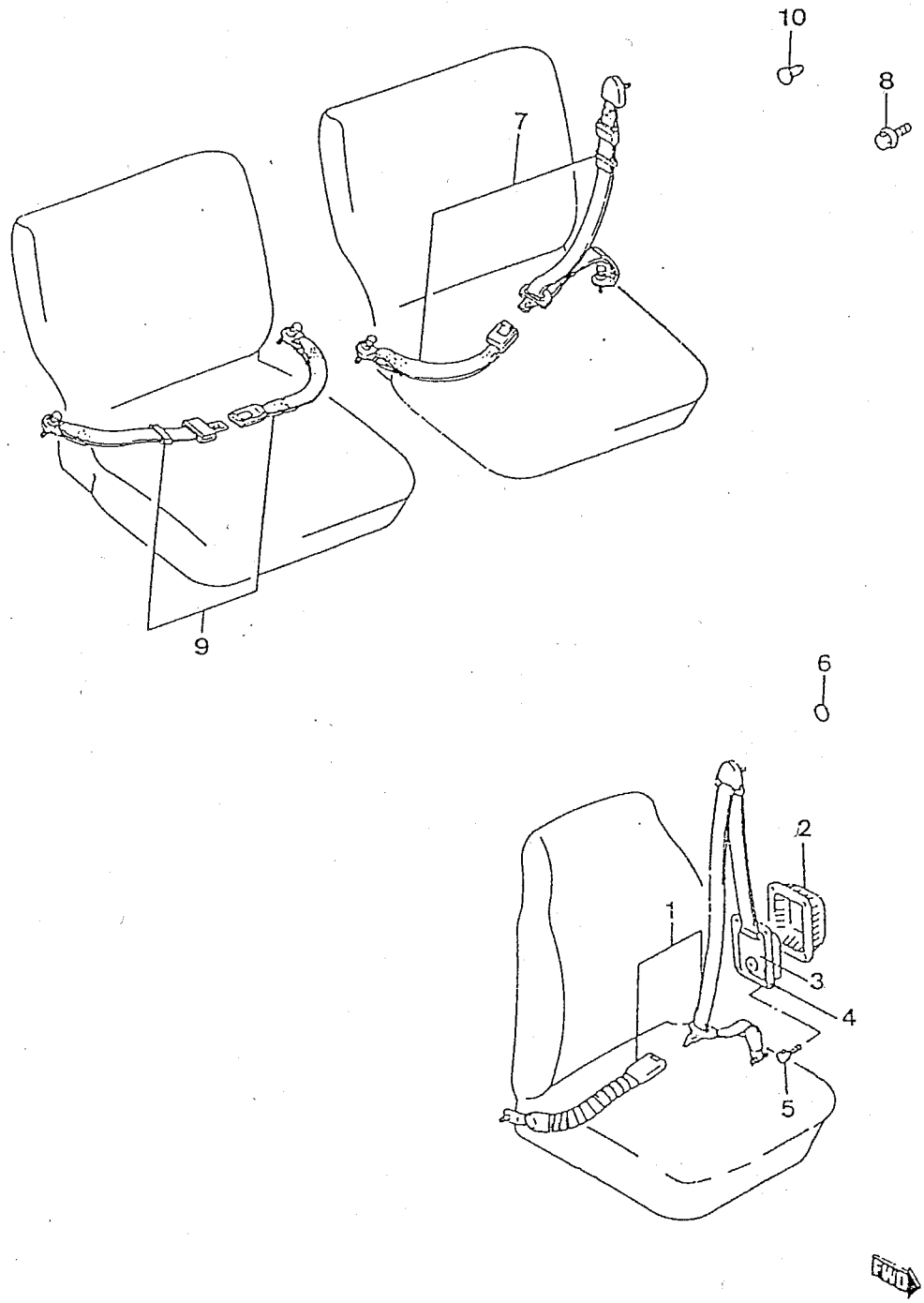

PUBLICACION N:A01116 GRUPO=ASIENTOS SUBGRUPO=L-04CINTURON SEGUR.
EDICION N: 1 GROUP=SEATS SUBGROUP=L-04SAFETY BELT
GROUPE=SIEGES SUBGROUPE=L-04CEINTURE SECUR.

N.FIG PLATE N.FIG	N.PIEZA PARTNUMBER N.PIECE	CAN QTY OUT	DENOMINACION	DESCRIPTION	DENOMINATION	OBSERVACIONES
1	51771-00000-382	2	CINTUR.3P INERC.DEL.	FR.INERTIA 3P BELT	CEINTURE 3P INERT.AV	
2	84924-80130	2	CUBIERTA GUARDAPOLVO	BOOT COVER	COUVERCLE PAREPOUSS.	
3	84901E80133	2	PROTECTOR CUBIERTA	COVER PROTECTOR	PROTECTEUR COUVERCLE	
4	84901B80133	2	C/CUBIERTA CARRETE	SPOOL COVER ASSY	E/COUVERCLE BOBINE	
5	02142-06125	8	TORNILLO	SCREW	VIS	
6	50029-00000	2	LAMINA AUTOADHESIVA	AUTOADHESIVE PLATE	PLAQUE ADHESIVE	'V'
7	50051-00000	2	CINTURON 3P TRAS.	REAR 3 ANCHORS BELT	CEINTURE 3 ANCRE ARR	H 98221
	51778-00000	2	CINTUR.3P ESTATICO	STATIC 3P BELT	CEINT.3 ANCRE STATIQ	
8	50460-00000	4	TORNILLO CEGADO	BLIND SCREW	VIS	'J'
9	52349-00000	2	CINTUR.2P ESTATICO	STATIC 2P BELT	CEINT.2 ANCRE STATIQ	
	84904A80132	2	CINTUR.2P ESTATICO	STATIC 2P BELT	CEINT.2 ANCRE STATIQ	
10	50029-00000	4	TAPON CEGADO CINTUR.	BELT BLIND PLUG	BOUCHON CEINTURE	'V'
	50063-00000	4	TAPON CEGADO CINTUR.	BELT BLIND PLUG	BOUCHON CEINTURE	'J'

GRUPO 12 GRANDES CONJUNTOS

GROUP 12 ASSEMBLY PARTS

GROUP 12 GRANDS ENSEMBLES

COMPOSICION.....COMPOSITION.....COMPOSICION

REFERENCIA PARTNUMBER NUM.PIECE	DENOMINACION	DESCRIPTION	DENOMINATION
412092	S-02GRAN CONJUNTO	S-02ASSEMBLY PARTS	S-02GRANDS ENSEMBLES

GRANDES CONJUNTOS
ASSEMBLY PARTS
GRANDS ENSEMBLES

PUBLICACION N:A01116 GRUPO=GRANDES CONJUNTOS SUBGRUPO=S-02GRAN CONJUNTO
EDICION N: 1 GROUP=ASSEMBLY PARTS SUBGROUP=S-02ASSEMBLY PARTS
GROUPE=GRANDS ENSEMBLES SUBGROUPE=S-02GRANDS ENSEMBLES

N.FIG PLATE N.FIG	N.PIEZA PARTNUMBER N.PIECE	CAN QTY OUT	DENOMINACION	DESCRIPTION	DENOMINATION	OBSERVACIONES
1	11000A81000	1	C/MOTOR	ENGINE ASSY	ENS.MOTEUR	
2	21000A83000-5	1	C/CAJA CAMBIOS	GEAR BOX ASSY	ENS.BOITE VITESSES	
3	29001P83010	1	C/TRANSFERENCIA	TRNAFER ASSY	ENS.TRANSFERT	
4	40094P83000	1	C/EJE DELANTERO	FRONT SHAFT ASSY	ENS.AXE AVANT	
5	46094P83000	1	C/EJE TRASERO	REAR SHAFT ASSY	ENS.AXE ARRIERE	
6	27300A83100	1	C/DIFERENCIAL DEL.	FR.DIFFERENTIAL ASSY	ENS.DIFFERENTIEL AV.	
7	27301A83100	1	C/DIFERENCIAL TRAS.	RR.DIFFERENTIAL ASSY	ENS.DIFFERENTIEL ARR	
8	00000A01118	1	MOTOR 3/4	SHORT ENGINE	MOTEUR 3/4	

INDICE NUMERICO

NUM. DE PIEZA	PAGIN	NUM. DE PIEZA	PAGIN	NUM. DE PIEZA	PAGIN	NUM. DE PIEZA	PAGIN
00000A00008	12	00000A00236	77	00000A00370	41	00000A00635	44
00000A00009	12	00000A00236	78	00000A00382	23	00000A00653	23
00000A00010	12	00000A00236	79	00000A00386	23	00000A00661	44
00000A00011	12	00000A00237	79	00000A00387	23	00000A00689	101
00000A00012	12	00000A00239	79	00000A00388	23	00000A00689	109
00000A00013	19	00000A00241	79	00000A00424	39	00000A00694	47
00000A00014	19	00000A00242	79	00000A00425	39	00000A00695	47
00000A00015	19	00000A00243	45	00000A00426	39	00000A00718	78
00000A00017	37	00000A00250	41	00000A00427	39	00000A00723	74
00000A00020	37	00000A00257	69	00000A00428	39	00000A00811	43
00000A00021	37	00000A00260	69	00000A00429	39	00000A00831	38
00000A00022	37	00000A00261	69	00000A00430	39	00000A00833	38
00000A00023	37	00000A00262	69	00000A00431	39	00000A00837	38
00000A00024	37	00000A00281	52	00000A00432	39	00000A00842	38
00000A00029	37	00000A00282	52	00000A00433	39	00000A00843	38
00000A00030	37	00000A00283	73	00000A00434	39	00000A00845	38
00000A00031	37	00000A00291	77	00000A00435	39	00000A00846	38
00000A00032	37	00000A00291	78	00000A00461	23	00000A00900	79
00000A00033	37	00000A00291	79	00000A00484	45	00000A00901	79
00000A00034	37	00000A00292	52	00000A00485	45	00000A00902	79
00000A00037	37	00000A00293	102	00000A00487	53	00000A00905	78
00000A00038	37	00000A00293	107	00000A00487	54	00000A00906	78
00000A00039	37	00000A00294	102	00000A00494	38	00000A00907	78
00000A00040	37	00000A00296	109	00000A00496	38	00000A00920	52
00000A00041	37	00000A00314	40	00000A00499	38	00000A00983	74
00000A00042	37	00000A00315	40	00000A00506	38	00000A00984	74
00000A00044	37	00000A00316	40	00000A00507	38	00000A00985	53
00000A00045	37	00000A00317	40	00000A00508	38	00000A00986	54
00000A00046	37	00000A00318	40	00000A00520	79	00000A00988	53
00000A00048	38	00000A00319	40	00000A00531	79	00000A00988	54
00000A00062	38	00000A00320	40	00000A00532	79	00000A00989	23
00000A00069	41	00000A00321	40	00000A00534	79	00000A00990	23
00000A00070	41	00000A00322	40	00000A00535	79	00000A00991	23
00000A00071	41	00000A00323	40	00000A00541	44	00000A00992	23
00000A00072	41	00000A00324	40	00000A00542	44	00000A00993	23
00000A00073	41	00000A00325	40	00000A00543	44	00000A00994	23
00000A00074	41	00000A00326	40	00000A00544	44	00000A00995	23
00000A00075	50	00000A00327	40	00000A00545	44	00000A00997	23
00000A00092	45	00000A00330	53	00000A00546	44	00000A00998	23
00000A00096	45	00000A00330	54	00000A00547	44	00000A00999	23
00000A00097	46	00000A00331	53	00000A00564	23	00000A01000	23
00000A00098	46	00000A00331	54	00000A00606	11	00000A01001	23
00000A00099	46	00000A00333	53	00000A00607	11	00000A01002	23
00000A00099	47	00000A00333	54	00000A00608	11	00000A01003	23
00000A00101	46	00000A00334	53	00000A00609	11	00000A01004	23
00000A00101	47	00000A00335	53	00000A00610	11	00000A01038	78
00000A00101	47	00000A00335	54	00000A00611	11	00000A01043	45
00000A00102	46	00000A00336	53	00000A00612	11	00000A01044	51
00000A00103	47	00000A00336	54	00000A00613	11	00000A01075	54
00000A00105	47	00000A00337	53	00000A00614	11	00000A01076	54
00000A00106	47	00000A00337	54	00000A00615	11	00000A01077	54
00000A00107	47	00000A00339	53	00000A00616	11	00000A01078	54
00000A00109	47	00000A00339	54	00000A00617	11	00000A01079	54
00000A00110	47	00000A00340	53	00000A00618	11	00000A01080	54
00000A00122	69	00000A00340	54	00000A00619	11	00000A01081	54
00000A00123	69	00000A00341	53	00000A00620	11	00000A01082	54
00000A00127	70	00000A00342	55	00000A00621	11	00000A01083	54
00000A00129	70	00000A00343	55	00000A00622	11	00000A01086	38
00000A00148	46	00000A00344	55	00000A00623	11	00000A01090	38
00000A00148	47	00000A00345	55	00000A00624	11	00000A01092	38

00000A00149	47	00000A00346	55	00000A00625	11	00000A01093	38
00000A00151	73	00000A00347	55	00000A00626	11	00000A01094	38
00000A00152	73	00000A00348	55	00000A00627	11	00000A01095	38
00000A00153	77	00000A00349	55	00000A00628	11	00000A01096	38
00000A00154	77	00000A00350	55	00000A00629	11	00000A01097	38
00000A00157	79	00000A00351	55	00000A00630	11	00000A01098	38
00000A00158	79	00000A00352	55	00000A00631	11	00000A01118	122
00000A00160	79	00000A00353	55	00000A00632	11	00000A01119	112
00000A00234	79	00000A00365	104	00000A00633	11	00000A01121	112
00000A00235	79	00000A00369	41	00000A00634	11	00009-00000	81

INDICE NUMERICO

NUM. DE PIEZA	PAGIN	NUM. DE PIEZA	PAGIN	NUM. DE PIEZA	PAGIN	NUM. DE PIEZA	PAGIN
00010-00000	9	01411-10253	14	02112-04108	10	03111-04255	120
00010-00000	15	01421-10453	28	02112-05103	96	03111-05126	46
00011-00000	15	01421-10503	28	02112-05103	96	03111-05126	47
00011-00000	75	01507-08203	38	02112-05105	68	03111-05126	48
00011-00000	81	01514-06103	2	02112-05105	69	03111-05128	50
00016-00000	81	01514-06103	3	02112-05126	45	03111-05203	96
00016-00000	81	01514-06103	8	02112-05126	51	03111-05303	69
01104-06126	76	01514-06103	13	02112-05126	106	03111-05303	90
01104-06126	87	01514-06103	14	02112-05206	10	03111-05303	111
01104-06126	87	01514-06103	19	02112-06086	41	03111-15126	41
01104-06128	82	01514-06103	24	02112-06086	42	03112-04169	46
01104-06166	47	01514-06106	18	02112-06086	100	03121-05165	44
01104-06166	52	01514-06123	30	02112-06086	100	03141-04085	101
01104-06166	72	01514-06123	87	02112-06123	71	03141-04086	51
01104-06166	76	01514-06163	24	02112-06123	82	03141-04086	51
01104-06168	85	01514-06163	30	02112-06123	94	03141-04086	55
01104-06203	80	01514-06166	23	02112-06123	103	03141-04086	55
01104-08126	28	01514-06203	19	02112-06125	94	03141-04126	49
01104-08126	49	01514-06203	20	02112-06125	94	03141-04126	50
01104-08126	58	01514-06603	2	02112-06126	36	03141-04165	111
01104-08126	60	01514-08123	82	02112-06126	100	03141-04166	50
01104-08163	31	01514-08126	81	02112-06163	94	03141-05103	12
01104-08163	65	01514-08203	30	02112-06163	94	03141-05125	35
01104-08203	73	01514-08256	2	02112-06163	103	03141-05126	49
01104-08303	20	01514-08353	14	02112-06163	104	03141-05128	49
01104-10203	104	01514-08353	25	02112-06165	85	03141-05128	102
01104-12303	72	01517-06103	4	02112-06165	110	03141-05165	44
01104-12553	70	01517-06166	75	02112-06166	104	03141-06108	18
01107-06123	36	01517-06203	6	02112-06303	112	03141-06123	14
01107-06126	76	01517-06253	6	02112-06405	85	03141-06123	72
01107-06163	4	01517-06303	16	02122-06126	7	03141-06123	81
01107-06166	76	01517-06303	17	02122-06126	16	03141-06123	82
01107-06166	106	01517-06353	16	02122-06166	7	03141-06123	96
01107-06166	117	01517-06356	76	02132-05105	97	03141-06125	110
01107-06166	118	01517-06403	16	02132-05205	96	03141-06125	110
01107-06203	21	01517-06403	17	02132-05205	99	03141-06126	20
01107-06206	76	01517-08166	120	02132-06163	101	03141-06126	47
01107-06503	17	01517-08203	9	02142-05083	107	03141-06126	82
01107-08163	5	01517-08203	33	02142-05083	112	03141-06128	107
01107-08163	117	01517-08203	39	02142-05085	98	03141-06163	72
01107-08203	5	01517-08203	39	02142-05103	99	03211-04106	50
01107-08206	36	01517-08303	28	02142-05128	96	03211-04126	48
01107-08206	36	01517-08303	38	02142-05165	98	03211-05163	96
01107-08206	61	01517-08353	28	02142-05167	96	03241-05085	120
01107-08206	118	01517-08356	36	02142-05168	98	03241-05105	110
01107-08253	5	01517-08406	8	02142-06003	112	03241-05108	111
01107-08253	13	01517-08453	37	02142-06103	18	03241-05125	118
01107-08253	15	01517-08506	37	02142-06103	112	03241-05165	110
01107-08253	38	01517-10403	28	02142-06106	41	03241-05165	111
01107-08253	39	01517-10453	28	02142-06106	42	03241-05205	111
01107-08256	14	01517-10606	3	02142-06106	43	03241-05205	111
01107-08256	61	01537-08653	28	02142-06106	100	03241-05255	111
01107-08303	5	01707-08203	67	02142-06106	101	03241-06103	71
01107-08303	13	01707-08253	58	02142-06106	111	03241-06103	72
01107-08303	33	01707-08253	60	02142-06123	12	03241-06126	110
01107-08303	33	01707-10253	18	02142-06123	110	03242A05163	84
01107-08303	36	01707-10303	5	02142-06125	52	03541-04103	84
01107-08303	70	01707-10303	18	02142-06125	93	03541-04106	22
01107-08353	34	01707-10403	72	02142-06125	111	03541-04126	23
01107-08403	33	02004-00000	102	02142-06125	121	03541-05123	111

01107-08403	33	02005-00000	47	02142-06126	52	03541-05123	111
01107-08453	34	02007-00000	47	02142-06163	90	03541-05126	22
01107-08803	33	02007-00000	81	02142-06163	107	03541-05163	111
01107-10203	71	02007-00000	81	02142-06164	110	03542-04167	84
01107-12703	70	02008-00000	48	02142-06164	110	04001-00000	68
01107-12903	70	02009-00000	36	02142-06165	96	04004-00000	79
01108A07166	25	02010-00000	37	02142-06165	96	04008-00000	110
01411-06123	13	02011-00000	87	02142-06165	110	04111-25186	80
01411-08203	9	02112-04103	107	02142-06165	111	04111-25206	73
01411-08303	13	02112-04106	105	02142A06165	96	04111-25206	74

INDICE NUMERICO

NUM. DE PIEZA	PAGIN	NUM. DE PIEZA	PAGIN	NUM. DE PIEZA	PAGIN	NUM. DE PIEZA	PAGIN
04111-30206	70	08312A31108	65	08321A31103	78	08322-11086	33
04211A09109	6	08313A11085	118	08321A31106	118	08322-11086	33
04211A09109	16	08313B11063	94	08321A31123	62	08322-11086	33
04221-06129	2	08313B11063	112	08321A31123	65	08322-11086	33
04221-06129	6	08313B11063	120	08321A31123	65	08322-11086	34
06003-00000	120	08313B11068	107	08321A31123	66	08322-11086	34
06111-06004	26	08313B11083	112	08321A31123	66	08322-11086	80
06112-10004	30	08313B11085	107	08321A31123	67	08322-11086	102
06112-10004	35	08314-41123	70	08321A31123	70	08322-11086	118
06112-12004	29	08315-01069	87	08321A31123	70	08322-11103	104
06112-12004	35	08316-16103	28	08321A31123	72	08322-21048	50
08001-00000	111	08316-16123	72	08321A31123	77	08322-21053	87
08002-00000	20	08316-26066	81	08321A31123	78	08322-21056	46
08003-00000	12	08316-26066	101	08321A31126	58	08322-21056	47
08004-00000	12	08316-26066	103	08321A31126	60	08322-21056	69
08005-00000	20	08316A16063	17	08321B31086	5	08322-21058	96
08007-00000	24	08316A16063	22	08321B31086	8	08322-21063	13
08010-00000	118	08316A16063	88	08321B31086	9	08322-21063	17
08113-63040	27	08316A16063	92	08321B31086	12	08322-21063	24
08113-63050	26	08316A16083	23	08321B31086	15	08322-21063	107
08173-63060	31	08316A16083	38	08321B31086	20	08322-21065	82
08212-14201	29	08316A16083	39	08321B31086	29	08322-21065	111
08310-11056	43	08316A16086	69	08321B31086	30	08322-21066	100
08310-11056	45	08316A16086	111	08321B31086	31	08322-21066	106
08310-11063	8	08316A16086	120	08321B31086	33	08322-21066	117
08310-11063	13	08316A26086	38	08321B31086	33	08322-21066	118
08310-11063	102	08316B16066	52	08321B31086	33	08322-21066	120
08310-11066	36	08319A21066	81	08321B31086	33	08322-21068	94
08310-11066	36	08319A21066	105	08321B31086	33	08322-21068	103
08310-11066	52	08321-21048	10	08321B31086	34	08322-21086	102
08310-11066	53	08321-21058	10	08321B31086	34	08322-21103	18
08310-11066	54	08321-21206	70	08321B31086	36	08322-21123	70
08310-11066	76	08321A21076	25	08321B31086	37	08322A21163	65
08310-11066	85	08321A31046	105	08321B31086	38	08322A21163	66
08310-11066	85	08321A31056	45	08321B31086	39	08323-31063	101
08310-11066	107	08321A31056	106	08321B31086	41	08323A31056	50
08310-11083	9	08321A31063	4	08321B31086	42	08331-31266	61
08310-11083	12	08321A31063	8	08321B31086	49	08331A41256	56
08310-11083	13	08321A31063	17	08321B31086	56	08332-11106	29
08310-11083	15	08321A31063	36	08321B31086	58	08332-11106	35
08310-11083	25	08321A31063	71	08321B31086	58	08332A11058	101
08310-11083	39	08321A31063	94	08321B31086	60	08332A11058	103
08310-11083	70	08321A31063	103	08321B31086	60	08332T11156	76
08310-11086	9	08321A31063	103	08321B31086	61	08341-31059	6
08310-11086	36	08321A31066	4	08321B31086	61	08341-31059	8
08310-11086	37	08321A31066	47	08321B31086	65	08351A21008	56
08310-11086	47	08321A31066	52	08321B31086	67	08409A08303	114
08310-11086	69	08321A31066	52	08321B31086	69	09100-06055	36
08310-11103	33	08321A31066	72	08321B31086	69	09100-06055	36
08310-11103	65	08321A31066	76	08321B31086	70	09100-06075	94
08310-11103	66	08321A31066	76	08321B31086	73	09100-06127	8
08310-11103	67	08321A31066	76	08321B31086	73	09100-08167	102
08310-11103	70	08321A31066	76	08321B31086	74	09100-08172	56
08310-11123	62	08321A31066	76	08321B31086	79	09100-08184	69
08310-11123	65	08321A31066	80	08321B31086	102	09100-08218	69
08310-11123	65	08321A31066	94	08321B31103	5	09100-08226	41
08310-11123	65	08321A31066	100	08321B31103	18	09100-08226	42
08310-11123	66	08321A31066	100	08321B31103	33	09100-08253	64
08310-11123	66	08321A31066	100	08321B31103	67	09100-10023	77
08310-11123	66	08321A31066	106	08321B31103	71	09100-10023	78

08310-11123	70	08321A31066	107	08321B31103	72	09100-10168	72
08310-11123	70	08321A31066	117	08321B31103	104	09100-12041	67
08310-12083	73	08321A31068	83	08322-11056	48	09100-12059	65
08310-12086	56	08321A31068	85	08322-11083	5	09100-12059	66
08310-12086	73	08321A31068	85	08322-11083	5	09100A06116	4
08310-12086	74	08321A31086	118	08322-11083	25	09100A12111	77
08310-12103	5	08321A31103	65	08322-11085	118	09100A12111	78
08310-22106	50	08321A31103	66	08322-11086	33	09103-06089	18
08310T24106	75	08321A31103	70	08322-11086	33	09103-06134	2
08312A21108	65	08321A31103	77	08322-11086	33	09103-08030	60

NUM. DE PIEZA	PAGIN	NUM. DE PIEZA	PAGIN	NUM. DE PIEZA	PAGIN	NUM. DE PIEZA	PAGIN
09103-08130	28	09148-05013	44	09160-35002	57	09200-10010	74
09103-08131	28	09148-05022	84	09160-35002	59	09200A08039	80
09103-08132	28	09148-85C00	120	09160-35003	57	09202A06004	6
09103-08152	8	09148A03003	84	09160-35003	59	09205-03019	25
09103-08154	2	09148A04010	84	09160-35004	57	09205-04001	35
09103-08155	2	09148A05004	111	09160-35004	59	09205-04003	35
09103-10018	2	09148A05004	111	09160-35006	57	09205-05007	58
09103-10028	58	09148A05005	44	09160-35006	59	09205-05012	29
09103-10028	60	09148A05013	44	09160T08075	8	09206-13001	2
09103-10097	6	09148A05013	87	09160T08075	36	09206-13001	28
09103-12002	6	09148A05013	110	09161-04008	101	09206-13011	28
09103-12002	8	09148A05013	111	09161-04008	103	09206-13011	28
09103A08152	69	09148A05013	111	09161-04011	112	09208-85C00	120
09107A08005	38	09148A05013	111	09161-10009	75	09209-05016	94
09107A08005	39	09148A06003	82	09161A06008	35	09209-05016	101
09108-06040	17	09148A35001	76	09161A06008	101	09209-05016	103
09108-06078	8	09150-06010	24	09161A06008	103	09209-13018	24
09108-08168	9	09159-07002	7	09163A08002	94	09229-84C10	107
09111-08066	69	09159-08033	6	09163A08002	101	09241-08003	30
09111A12009	57	09159-20003	57	09163A08002	103	09241-20002	2
09111A12009	60	09159-20003	59	09163T10001	76	09241-20002	3
09115-06001	43	09159A08022	14	09163T10001	80	09241-20006	2
09115-06001	46	09159A08022	80	09164-15006	58	09241-22003	25
09115-06001	49	09159A10017	14	09164-15006	60	09241-30002	3
09117-08042	69	09159A10060	72	09164A24003	30	09246-05003	3
09119-12008	61	09159A12009	104	09166-16014	27	09246-06002	3
09119A06007	53	09159A12009	104	09166-25009	26	09246-06002	16
09119A06007	54	09159B04002	46	09166-30007	26	09246-16009	63
09119A06007	107	09160-05013	43	09168-20002	63	09246A05001	9
09119A06007	120	09160-06003	83	09168A08015	28	09246A16009	28
09119A08023	73	09160-06006	85	09168A12005	18	09246A16009	28
09119A12007	62	09160-06016	47	09168A12007	4	09246A16009	33
09119A12007	62	09160-06016	83	09180-06106	8	09246A16009	63
09124A35001	76	09160-06019	85	09180-06106	21	09246A16010	33
09125-06036	82	09160-06019	107	09180-08007	69	09246A16010	63
09125-06036	82	09160-06020	53	09180-08095	14	09247-12101	4
09125-06041	92	09160-06020	54	09180-08111	8	09247A12101	18
09125-06041	99	09160-06020	105	09180-12035	65	09247A18003	28
09125-06060	89	09160-06020	107	09181-35012	57	09247A18003	28
09125-08002	90	09160-06020	120	09181-35012	59	09250-02001	96
09125-08002	94	09160-06027	8	09181-35013	57	09250-10006	29
09125-08002	98	09160-06027	21	09181-35013	59	09250-14003	51
09125-08002	99	09160-06027	52	09181-35014	57	09250-14003	96
09125-08002	102	09160-06027	87	09181-35014	59	09250-14006	94
09125-08002	104	09160-06064	120	09181-35015	57	09250-25007	86
09126-06007	16	09160-06074	110	09181-35015	59	09250-26005	28
09126A08005	90	09160-06107	102	09181-35016	57	09250-30002	86
09126A08005	101	09160-08030	39	09181-35016	59	09250-40002	86
09126A08006	94	09160-08030	41	09181-35017	57	09250-40002	87
09126A08006	103	09160-08030	42	09181-35017	59	09250-40002	102
09128-06031	85	09160-08033	8	09181-35018	57	09251-09002	36
09128-06032	30	09160-08075	107	09181-35018	59	09261-03017	29
09128-06032	32	09160-08080	38	09181-35019	57	09261-06003	27
09129-06002	43	09160-08080	42	09181-35019	59	09262-28005	26
09129-06002	48	09160-08086	99	09181-35020	57	09262-28018	26
09132-05029	87	09160-10001	5	09181-35020	59	09262-28019	26
09132-06006	15	09160-10001	18	09181-35021	57	09262-28020	26
09132-06006	15	09160-10001	36	09181-35021	59	09262-30072	26
09132-06006	80	09160-10072	2	09181-35022	57	09262-35002	57
09135-08006	29	09160-10074	70	09181-35022	59	09262A35007	62

09135-08006	30	09160-10094	72	09181-35023	57	09263-20056	26
09139-05028	47	09160-10094	72	09181-35023	59	09263-27007	26
09139-06036	89	09160-12073	65	09181-35024	57	09263-30031	26
09139-06036	92	09160-12073	66	09181-35024	59	09263-35015	26
09139-06058	83	09160-18018	28	09181-35025	57	09263-35015	26
09139-06058	88	09160-18018	28	09181-35025	59	09263-35015	27
09139-06058	92	09160-18018	33	09181-35026	57	09263-35028	27
09140-12026	64	09160-18018	33	09181-35026	59	09265-35002	59
09148-04010	84	09160-20056	57	09198-10001	30	09265-45002	58
09148-04033	84	09160-20056	59	09200-10010	73	09265-45002	60

NUM. DE PIEZA	PAGIN	NUM. DE PIEZA	PAGIN	NUM. DE PIEZA	PAGIN	NUM. DE PIEZA	PAGIN
09265A15002	61	09401-08402	18	09492-45017	10	11671-80010	5
09265A30003	57	09401-16301	18	09812A00007	82	11710A80000	5
09265A30003	59	09401-50402	35	09813A00006	82	11741-80010	5
09265A41001	61	09401A11404	15	09813A00009	82	11851-73000	13
09269B33001	25	09401A11404	20	09814A00001	82	11851-85000	28
09269C33001	25	09401A20402	20	09814A00007	82	11962A80C12	85
09280-14004	20	09401B11402	15	09816A00074	83	12111A75107	6
09280-16005	4	09403-06403	120	09816A00083	83	12111A75107-025	6
09280-19001	32	09403-07312	76	09824A00017	82	12111A75107-050	6
09283-25077	26	09403-08309	15	09824A00022	82	12140-75112	6
09283-26016	61	09403-08310	15	09824B00022	82	12140-75112-025	6
09283-32025	6	09403-08313	85	09824C00022	82	12140-75112-050	6
09283-32026	7	09403-09309	82	11000A81000	122	12151A29001	6
09283-40013	57	09403A23401	18	11100-80811	1	12160-73002	6
09283-40013	59	09403A45301	15	11110-80002	2	12181-81051-025	6
09283-48007	62	09403A48401	12	11112-73001	2	12181-81051-050	6
09283-50002	61	09404A06402	24	11115-82000	2	12181-81051-0A0	6
09283-60005	6	09404A06402	50	11141B75102	1	12221-80000	6
09284-14003	25	09404A06415	24	11141B75102	2	12341-73001-025	6
09285-00002	61	09404A06415	28	11141C75102	1	12341-73001-050	6
09289-07005	7	09404A06415	48	11141C75102	2	12341-73001-0A0	6
09300-14012	25	09404A08405	15	11161A80000	2	12351A73000	6
09300-30003	26	09404A08405	49	11169B73002	1	12351A73000-025	6
09300-30003	27	09405-80302	87	11169B73002	2	12351A73000-050	6
09305-07003	18	09405A35402	34	11171A73000	2	12611-80500	6
09305-13006	65	09405A65302	87	11171B73000	2	12620A73001	6
09305-13006	66	09407A12402	24	11172-73001	2	12623-70B00	6
09306-14004	36	09407A12402	83	11173A73001	1	12631-78401	6
09308-08001	85	09407A23401	47	11173A73001	2	12635-78401	6
09308-08007	46	09408-00012	43	11174-73000	2	12710-80005	7
09308-10004	8	09408-00033	41	11180-78101	2	12721-73000	7
09308-10004	21	09408-00033	42	11189-73001	1	12731-73001	7
09308-14006	50	09408-00060	21	11189-73001	2	12741-78402	8
09319-12023	66	09408A00083	15	11189-73002	1	12749-73001	7
09320-06006	96	09408A00118	24	11189-73002	2	12761A78400	8
09320-06006	104	09409-05304	90	11191A78100	2	12761B78400	8
09320-06011	85	09409-07306	19	11191A78100	9	12810-84001	8
09320-09004	107	09409-07306	90	11191A80000	9	12810A73003	8
09320A06014	104	09409-07306	92	11193A80000	9	12821-78100	8
09320B06014	104	09409-07310	90	11193B80000	9	12841-60C00	7
09343-03087	21	09409-07310	92	11200-80001	3	12848A73010	7
09343-03088	21	09409-07312	90	11200A80001	3	12860A73004	7
09343-03090	21	09409-07312	92	11221-73000	3	12891-73002	7
09343-03090	21	09409-08320	113	11229A73000	1	12911C78100	7
09343-03094	21	09409-10301-5ES	111	11229A73000	3	12911D78100	7
09343-03114	21	09409A07317	82	11241-73003	16	12915C73002	7
09343-07086	19	09409A07317	87	11250-80000	3	12915D73002	7
09343-07104	19	09409A08303	114	11311-80000	3	12921-73002	7
09343A04036	15	09409B12301	95	11320-73000	3	12931A82010	7
09344-05040	18	09409C12301	95	11322-73000	3	12932-82000	7
09344-05042	18	09410-00067	115	11323-73000	3	12933-73000	7
09352-11163-410	18	09422-05011	27	11341A73000	6	13110-80050	9
09354-54116-375	15	09422-05012	27	11349B73002	1	13110B80050	9
09354-70124-059	15	09440-04019	30	11349B73002	6	13110C80050	9
09360-10026	75	09440-07005	30	11360A78100	8	13119B73001	1
09367-14003	9	09440-08026	24	11391A73003	8	13119B73001	9
09380-25011	26	09440-11005	30	11398-73000	8	13121-80000	9
09380-28007	26	09440-12004	63	11399A73010	1	13125-80000	1
09380-28007	26	09440-27007	85	11399A73010	8	13125-80000	9
09380-28007	26	09448-18016	29	11400-80814	1	13125A80000	1

09381A16001	6	09448-18017	29	11482-73004	8	13125A80000	9
09385-12001	80	09448-20006	25	11483-73001	8	13200-80300	10
09388-00017	27	09448-21003	36	11484-73000	8	13200-80820	10
09388-00019	27	09448-30010	36	11485-73000	8	13200A80300	11
09388-00019	27	09448-31030	36	11486-78110	8	13212-80000	10
09390-62010	26	09462-00040	112	11510A80002	4	13246-80000	10
09390-68002	26	09482-00155	2	11610A80010	5	13248-80000	10
09400A19302	74	09482-00167	2	11640-80010	5	13249-80000	10
09400A53301	18	09482A00155	2	11650-80010	5	13250-80000	10
09400A60301	18	09491-23014	10	11661-80001	5	13251-80000	10

NUM. DE PIEZA	PAGIN	NUM. DE PIEZA	PAGIN	NUM. DE PIEZA	PAGIN	NUM. DE PIEZA	PAGIN
13254-80000	10	15930B80420	24	24210A80401	26	27351-83000	58
13269-80000	10	15930D80090	24	24220A83000	26	27351-83000	60
13271-80000	10	15930E80090	24	24230A83000	26	27355-83000	60
13272-80000	10	16100-73003	16	24250B83000	26	27356A63000	60
13274-80000	10	16119-73001	1	24255-60A00	26	27411-83000	58
13292-80000	10	16119B73003	16	24351A83000	26	27411-83000	60
13370-80000	10	16131-73001	16	24411-83000	27	27421-83000	58
13391-74030	10	16132-73000	16	24412-83000	27	27421-83000	60
13480-80000	10	16151-73000	16	24413-83001	27	27450-83000	57
13490-80000	10	16152-73001	16	24421-83004	27	27450-83000	59
13491-80000	10	16153-73000	16	24422-83003	27	27461-83000	58
13492-80000	10	16161-73002	16	24423-83003	27	27461-83000	60
13493-80000	10	162536	49	24431-83001	27	27462-63202	58
13494-80000	10	16510A83000	16	24432-83001	27	27462-63202	60
13495-80000	10	16510B83000	16	24436-83000	27	28101A83010	30
13496-80000	10	16520-80001	4	24471-60A00	27	28101B83010	30
13497-80000	10	16910-80002	3	24473-70D00	27	28113-83010	30
13498-80000	10	16915-80000	3	24551-83000	27	28113-83020	30
13573-80000	10	16920-80001	2	24560A83001	27	28135-80000	30
13610-80000	10	17111-73000	17	24671-83000	27	28136-83000	30
13611-80000	10	17131-80000	17	24681-83000	27	28137-83000	30
13699-80020	10	17400-78101	17	24700-80400	28	28381A83000	35
13701E80020	12	17431A73001	1	24741-83001	28	28381B83000	115
13701F80020	12	17431A73001	17	24759A78130	15	29001P83010	122
13780B79210	12	17511B73001	17	24759A78130	34	29111-80450	31
13840-80002	12	17521C71520	17	24770-80420	28	29117-80050	31
13840A80002	12	17521D71520	17	24780-83010	28	29118-80050	31
13870A80030	12	17550-80000	20	24821-09000	28	29119-80050	31
13881-80010	12	17559-73000	20	25121-83001	30	29121-80050	31
13881A80010	12	17559-84C00	1	25125A80001	30	29131-80050	31
13896A79100	12	17559A73000	1	25211-83002	29	29136-80050	31
14111-80000	13	17561-73000	20	25221-83002	29	29141-80050	31
14130A80001	13	17569A80000	1	25241-83001	29	29143-80050	32
14135-80000	13	17569B80000	20	25261-83002	29	29147-80050	32
14140A73000	1	17570A74001	20	25271-83002	29	29148-80050	32
14140A73000	13	17671-85C00	20	25341-69002	30	29149-80050	32
14150A80040	14	17700A80001	19	25342-69002	30	29151-80050	32
14181C80000	1	17761A80000	19	25411-80401	29	29211-80050	31
14181C80000	14	17841-80000	20	25415-83000	29	29221-80050	31
14220-80000	14	17841A80000	20	25420-80401	29	29231-80050	31
14231-80010	14	17851-80000	20	25451-80421	29	29241-80050	31
14281-79010	14	17852-83000	20	25451A80421	29	29241-80050	31
14282-78010	14	17859-73000	20	27101B80401	56	29310-80050	35
14300A80022	14	17860A83010	20	27102C83001	56	29321-80052	35
14699-73001	1	17871-80010	20	27103C83001	56	29331-80050	35
14699-73001	14	17872-83010	20	27110-83001	57	29332-80051	35
15100D80000	15	17873-80010	20	27110-83001	59	29341-80701	35
15315-82000	15	17910A82000	39	27110-83050	31	29344-80000	35
15319C63800	1	17910C82000	38	27110-83053	32	29345-80051	35
15319C63B00	15	17910C82000	39	27110-83251	32	29346-80002	35
15410A63401	15	17921A82010	38	27131A83000	56	29347A80001	35
15810A70A10	15	17921A82010	39	27131B83001	56	29348-80050	35
15810A80010	15	17930A78100	19	27141A83000	56	29411-83050	32
15819-78000	15	17932-78100	19	27152B83002	56	29411-83051	32
15821-84C00	15	18115-83000	21	27153B83000	56	29421-80450	32
15821A83010	15	18115-83010	21	27180B83001	56	29421-80451	32
15830A83001	15	18118-80000	9	27200A83000	56	29431-80051	32
15840-83002	15	18123-80400	21	27200B83010	56	29431-80052	32
15861-83010	15	18123-83000	21	27300A83100	57	29510-80053	33
15861A70A42	15	18550-82021	21	27300A83100	122	29510A80051	33

15870-83002	15	21000A83000-5	122	27301A83100	59	29515-80050	33
15879-78000	15	22100B80020	25	27301A83100	122	29525A80050	33
15891-73001	15	22400C80020	25	27311B80002	57	29527-80050	33
15892-70A00	15	23260-83003	25	27311B80002	59	29527-80050	33
15893-70A00	15	23266-80400	25	27315-83001	57	29530-80050	33
15895-70A00	15	23710A80410	24	27315-83001	59	29530-80051	33
15897-70A00	15	23710A80420	24	27331-83000	58	29535-80050	33
15910A80011	24	24110A80401	26	27331-83000	60	29540-80050	33
15910B80001	24	24121-83002	26	27341-83100	58	29610A83001	33
15910B80011	24	24131-80420	26	27341-83100	60	29610A83001	33

NUM. DE PIEZA	PAGIN	NUM. DE PIEZA	PAGIN	NUM. DE PIEZA	PAGIN	NUM. DE PIEZA	PAGIN
29620-80701	33	33750-80040	42	35253-00000	107	37670H80000	50
29630-80700	33	33750A60A10	42	35255-00000	51	37740-60A10	50
29660-83000	34	33750A80010	41	35256-00000	51	37740A66010	50
29911-80050	32	33750A80040	42	35295-00000	106	37820A82000	3
29941-80050	35	33760-80040	42	35299-00000	68	37860A50A00	51
29945A80050	33	33760A60A10	42	35317-00000	54	37870-80000	50
29946A80050	33	33760A80010	41	35318-00000	49	37940A79000	50
29947-83200	34	33800A70A00	43	35319-00000	49	37941A79000	51
29951-83050	31	33800C70A00	43	35320-00000	49	38100A80031	52
29951-83050	32	33850A70A00	43	35321-00000	49	38101-80031	52
29951-83050	32	33850C70A00	43	35330-00000	28	38101A80031	52
29956A80050	31	33881-80000	41	35601C80032	46	38101B80031	52
29958A80050	28	33881-80000	42	35601D80032	46	38102-80031	52
29959-80050	31	33883-63200	41	35602C80032	46	38102A80031	52
29962-80050	31	33883-63200	42	35602D80032	46	38255-80000	52
29971-80051	32	34100B71A50	44	35603A80013	47	38271-71310	52
29971-83050	31	34810A80001	18	35603A80013	47	38272-71310	52
29972-80050	32	34810B80001	18	35604A80013	47	38274-78000	52
29973-80050	32	34825A67012	18	35604A80013	47	38278-67011	52
29975-80050	31	34850A65011	20	35910B80011	47	38310A80030	52
29977-80050	32	34850A82000	20	35910C80011	47	38340A63641	52
29981-80050	31	34910A80C30	44	36210A79003	50	38400B80000	52
29981-80050	32	35008-00000	53	36210B79003	50	38400C80000	52
29981-80050	32	35009-00000	53	36210D79003	50	38400E80000	52
29981-80051	31	35009-00000	54	36410A70A00	46	38480-80000	52
29981-80051	32	35010-00000	53	36410D70A00	46	38500A80100	48
29981-80051	32	35010-00000	54	36410D70A00	46	38610-50A01	50
29982-80050	31	35011-00000	102	36412-78400	46	38610B78303	50
29982-80051	31	35011-00000	107	36430A70A00	46	38610D78303	50
29983-80050	31	35013-00000	102	36570A79000	47	39312-60A01	49
29984-80050	31	35013-00000	107	36570C79000	47	39312A60A01	49
29985-80050	31	35017-00000	55	36580-80001	47	39400A83000	50
29986-80050	31	35018-00000	55	36610-84C20	48	39471-78001	51
29987-80050	31	35020-00000	102	36610A70A30	48	40025-00000	65
29992-80050	31	35021-00000	55	36610B70A30	48	40025-00000	66
29992-80050	32	35026-00000	28	36620-84C30	48	40026-00000	65
29995-80050	35	35060-00000	51	36620D70A20	48	40027-00000	65
29996-80050	35	35070-00000	49	36625-83000	48	40028-00000	65
30005-00000	40	35070-00000	53	36717-80C01	48	40029-00000	65
30007-00000	41	35070-00000	54	36740A80000	43	40046-00000	80
30008-00000	41	35070-00000	107	36820-80001	50	40047-00000	65
30009-00000	41	35073-00000	102	36820-80010	50	40050-00000	66
30009-00000	42	35073-00000	107	36820A61000	50	40094P83000	122
30010-00000	41	35100B79000	45	36820A80000	50	41110-70A00	65
30012-00000	41	35103-00000	55	36820A80010	50	41116-83000	65
31100A73032	37	35132-00000	51	36821-80000	49	41116-83000	66
31400A83010	39	35151-00000	102	36821A80000	49	41117-70A00	65
31400B83010	38	35152-00000	33	36822-84C00	18	41118-70A00	65
33100-80081	42	35154-00000	48	36822A80001	18	41118-70A00	66
33100A80080	41	35155-00000	48	36845-84C00	49	41230-70A00	65
33100B80080	41	35156-00000	48	36845-84C10	49	41240-70A00	65
33102-73010	42	35157-00000	48	36845-84C10	54	41310-70A10	66
33140-74010	42	35158-00000	49	36850A79500	50	41318-83010	66
33151-52011	42	35159-00000	48	36850C79500	50	41331-62020	65
33210-80030	42	35160-00000	48	37100A73302	50	41411-83000	65
33261-73010	42	35163-00000	48	37100A73302	109	41411-83010	65
33267-73011	42	35172-00000	51	37100B73302	50	41411-83020	65
33268-72010	42	35174-00000	49	37100B73302	109	41411A83000	66
33278-52010	42	35191-00000	45	37280A50A00	50	41430-83000	66
33310-73010	42	35197-00000	48	37400A84420	51	41440-83000	66

33321-75110	42	35222-00000	51	37400B84420	51	41461-79000	65
33410-77020	42	35223-00000	51	37400L84420	51	41461-83300	66
33459A78130	42	35224-00000	51	37610-84C00	28	41462-79000	65
33661A51020	43	35226-00000	53	37610-84C00	34	41462-79000	66
33700-80031	42	35227-00000	43	37610A80042	28	41463-82000	65
33700-80050	42	35231-00000	55	37610B80042	28	41463-82000	66
33700B80040	42	35243-00000	47	37610B80042	34	41600B70A00	65
33710J80031	42	35243-00000	47	37670C80000	51	41681A58040	70
33730-80040	42	35244-00000	47	37670D80000	50	41700B70A00	66
33730A80010	41	35244-00000	47	37670E80000	50	41781A80000	65

NUM. DE PIEZA	PAGIN	NUM. DE PIEZA	PAGIN	NUM. DE PIEZA	PAGIN	NUM. DE PIEZA	PAGIN
41781A80000	66	46510A70A00	63	50954-00000	115	51567-00000-5ES	120
41792A51110	65	46541-52002	63	50954-00000-5JR	115	51567-00000-5PK	120
41793A51110	65	46542-52000	63	50958-00000-5JR	115	51568-00000-5ES	120
41794A51110	65	48110A70A00	68	50960-00000	115	51568-00000-5PK	120
42110-80010	65	48120A70A00	68	50962-00000	90	51570A70A30	75
42150A83000	66	48120C70A00	68	50963-00000	90	51570B70A30	75
42300-70A00	67	48200C80210	69	50964-00000	107	51572-00000	107
42400-83001	67	48220B80110	69	50965-00000	107	51580B80130	75
42412-70A00	67	48230-80120	69	50970-00000	105	51588-00000	109
42415-83000	67	48251-52000	69	50971-00000	105	51588-00000	111
43110A70A00	64	48262-58000	69	50973-00000	106	51590-00000	94
43110A70A10	64	48270-80000	69	51000G83170	74	51590-00000	101
43110B70A00	64	48281-85000	69	51010C83010	74	51590-00000	103
43110C70A00	64	48411A80350-5ES	69	51086-00000	120	51590-00000	109
43130A78030	64	48421A80300-5ES	69	51100A80060	73	51590-00000	109
43210A70A00	64	48491-80000	69	51100B80060	73	51590-00000	109
43210A70A01	64	48600-80070	70	51132A82002	74	51592-00000	18
43210C70A01	64	48633-67011	70	51160-00000	113	51594-00000	109
43241-80001	61	48671-80060	70	51161-00000	113	51600-00000	104
43252-80000	64	48674-63240	70	51162-00000	116	51620-00000	107
43261-80000	64	48730A80010	70	51163-00000	116	51621-00000	107
43271-80000	64	48730B80010	70	51164-00000	116	51640A80000	76
43421-80002	61	48741-80060	70	51168-00000	116	51640B80000	75
43440-80004	61	48800A70A60	70	51169-00000	117	51712A83000	75
43445-80002	61	48810A80000	70	51173-00000	116	51755-67000	76
43461-80000	61	48843A70A00	70	51174-00000	117	51771-00000-382	121
43465-80000	61	48870A80060	70	51175-00000	117	51778-00000	121
43466-80000	61	48900A83301	70	51176-00000	117	51789-00000	118
43471-80001	61	49410-83011	36	51177-00000	117	51790-00000	118
43485-73000	62	49511-80110	36	51183-00000	120	51793-00000	54
43511A83003	62	49610-80110	36	51188-00000	119	51794-00000-5PK	95
43588-73000	62	49710A80110	36	51237-00000-ARA	119	51850-00000	119
44101A83300	61	49710B83010	36	51251-00000-ARA	119	51851-00000	119
44102A83300	61	49710C83010	36	51259-00000-ARA	119	51852-00000	119
44131-73001	62	49751-79001	36	51265-00000	119	51853-00000	119
44210-83301	62	49751-79001	36	51279-00000	119	51854-00000	120
44211-80000	62	49810-80110	36	51293-00000	119	51856-00000	119
44220-83301	62	49821-80110	36	51307-00000	119	51857-00000	119
45008-00000	80	50024-00000	109	51349-00000	119	51858-00000	119
45011-00000	80	50027-00000	86	51363-00000	119	51859-00000	119
45012-00000	80	50027-00000	86	51410A80120	75	51860-00000	116
45013-00000	80	50029-00000	51	51410E83100	75	51861-00000	116
45014-00000	80	50029-00000	92	51413-00000	106	51862-00000	116
45015-00000	80	50029-00000	121	51420A70A00	75	51863-00000	117
45018-00000	80	50029-00000	121	51420B80020	75	51864-00000	117
45019-00000	80	50044-00000	102	51427-00000	94	51865-00000	117
45020-00000	80	50051-00000	121	51430A70A00	75	51866-00000	117
45022-00000	80	50053-00000	87	51430B80020	75	51867-00000	117
45022-00000	81	50063-00000	121	51433-00000	106	51930A60A20	76
45023-00000	80	50064-00000	105	51436-00000	106	51950A83120	76
45023-00000	81	50065-00000	105	51437-00000	89	51951-00000	83
45025-00000	76	50066-00000	107	51438-00000	89	51951B83400	76
45040-00000	81	50067-00000	105	51439-00000	92	51951D83400	76
45041-00000	81	50104-00000	101	51460A80420	75	51951F83400	76
45043-00000	81	50140-00000	72	51460B80420	75	52026-00000	115
45046-00000	81	50227-00000	95	51460D80420	75	52028-00000	115
45058-00000	73	50323-00000	111	51470A70A00	75	52030-00000	115
45060-00000	73	50376-00000	84	51480A70A00	75	52031-00000	115
45069-00000	76	50460-00000	121	51495-00000	95	52033-00000	115
45111-80001	61	50463-00000	120	51495-00000	102	52085-00000	106

45151-80001	61	50464-00000	120	51500A80320	75	52086-00000	106
45610-63001	61	50670-00000	104	51500B80320	75	52088-00000	107
45621-63000	61	50683-00000	20	51501-00000	106	52089-00000	106
45622-63000	61	50685-00000	120	51502-00000	106	52090-00000	106
45623-80001	61	50686-00000	120	51514-00000	115	52093-00000	106
45624-63001	61	50688-00000	83	51516-00000	115	52093-00010	106
45625-63001	61	50747-00000	110	51520A80120	75	52094-00000	106
45626-63000	61	50948-00000	105	51520D80120	75	52094-00010	106
46094P83000	122	50949-00000	105	51520E83100	75	52095-00000	106
46480-83303	63	50952-00000	107	51540C80150	75	52102-00000	106

NUM. DE PIEZA	PAGIN	NUM. DE PIEZA	PAGIN	NUM. DE PIEZA	PAGIN	NUM. DE PIEZA	PAGIN
52102-00010	106	57211-80000	71	63110-70A00	91	64617-80130	92
52157-00000	107	57272-80000	71	63110-80000	88	64630-80492	89
52181-00000	87	57281-80020	71	63110-80000	91	64635-80001	89
52181-00000	95	57310-83000	71	63121-57C00	91	64640-70A10	89
52181-00000	106	57320-83000	71	63121-80100	91	64640-83003	89
52204-00000	104	57321-52001	72	63131-80150	91	64640-83003	92
52223-00000	104	57461-80001	71	63210A80430	91	64650-70A00	89
52308-00000	107	57471-80001	71	63230-80041	88	64650-70A00	92
52310-00000	106	57551-83000	71	63231-80152	91	64710-80001	89
52323-00000	113	57680-83001	71	63233-80001	91	64710-80100	92
52324-00000	113	57710-83301	71	63310-80001	88	64751-80101	93
52349-00000	121	57720-83301	71	63310A80150	91	65111-80103	93
52519-00000	83	58100-70A02	82	63461-70400	43	65120-80101	93
52520-00000	83	58200-83002	82	63461A70400	43	65130-80100	93
52537-00000	95	58300-50C01	85	63510-70A00	88	65134-80100	93
52605-00000	119	58300-51C01	85	63510-70A00	91	65135-80100	93
52606-00000-L45	119	58300-70A01	85	63510-80000	88	65141-80110	93
52607-00000-L45	119	58300-73A21	85	63510-80000	91	65241-80101	93
52609-00000-L45	119	58370-80000	85	63521-57C00	91	65710A80302	89
52610-00000-L45	120	58381A80000	85	63521-80110	91	65710A80304	89
52612-00000	119	58382A80000	85	63531-80140	91	65730A80012	89
52613-00000-L45	119	58410-80010	85	63610-80430	91	65730A80015	89
52614-00000-L45	119	58600A50C40	82	63630-80041	88	65730A80016	89
52616-00000-L45	119	58600D70A80	82	63631-80152	91	65750A80302	89
52617-00000-L45	120	58622-70A10	82	63710-80001	88	65750A80304	89
52619-00000	119	58622-83002	82	63710-80111	91	65770-80010-0DG	89
52620-00000-K58	119	58630-70A00	83	64110-57C10	91	65770-80010-19H	89
52621-00000-K58	119	58723T83001	82	64110-80031	88	65770-80010-1FG	89
52623-00000	119	58726-83001	82	64110-80181	91	65770-80010-1FH	89
52624-00000-K58	120	58763-83000	82	64116-50C10	88	65770-80010-26U	89
52626-00000	119	58771-80001	82	64116-80001	88	65770-80010-37V	89
52627-00000-K58	119	58800A50C40	82	64120-80011	88	65770-80010-38B	89
52628-00000-K58	119	58800A70A50	82	64131-80100	91	65775-80010	90
52630-00000-K58	119	58822-70A10	82	64132-80100	91	65780-80010-0DG	89
52631-00000	120	58822-83002	82	64141-80122	91	65780-80010-19H	89
52665-00000-5GT	114	58830-70A00	83	64150-73A20	88	65780-80010-1FG	89
52771-00000	83	58923T83001	82	64150-73A20	91	65780-80010-1FH	89
52775-00000	91	58971-80001	82	64200-50C01	91	65780-80010-26U	89
52777-00000	108	59101-80030	96	64200-70A00	88	65780-80010-37V	89
52778-00000	108	59300A80144	86	64200-70A01	88	65780-80010-38B	89
52779-00000	108	59300A83002	86	64200A50C51	88	65785-80010	90
52801-00000	107	59600-83111	86	64200A51C11	91	67700-80060	94
52813-00000	104	59600A83012	86	64216-80140	92	67790-80031	94
52887-00000	98	61100A80210	86	64217-80130	92	68001-80190	99
53001A70A00	79	61100C80210	86	64230-80492	89	68002-80190	99
53001B83040	62	61400A70A10	86	64235-80001	89	69100-83511	102
53001B83040	79	61400A83040	86	64240-70A10	88	69275-78200	98
53001D70A00	79	61490-80001	88	64240-83003	88	69310-80110	99
53002A70A00	79	61490-80001	91	64240-83003	91	69320-80110	99
53002D70A00	79	61492-80000	88	64250-70A00	89	69340-80110	99
54100B83310	80	61492-80000	92	64250-70A00	92	69350-80110	99
54100C83310	81	61500-70A10	86	64310-80100	92	69510-80110	102
54112-82010	80	61550-57C00	86	64311-80001	89	69520-80110	102
54161-83300	80	61550-80001	86	64351-80101	93	71411-83000	71
54312A60A10	81	61590-80001	88	64510-57C10	91	71420-80002	72
54313-60A10	81	61590-80001	91	64510-80031	88	71430A80002	72
54315-60A10	81	61600A83011	86	64510-80181	91	71441-83002	71
54640A70A00	80	61811-83000	86	64516-50C10	88	71471-80000	72
54660A83310	80	61820B83010	86	64516-80001	88	71472-80030	72
54683-83300	80	62111A83090	87	64520-80011	88	71473-80030	72

55100B80010	77	62112A80000	87	64531-80100	91	71481-80031	71
55100C80010	78	62113-80000	87	64532-80100	91	71491-80000	71
55211-60A00	78	62114C83000	87	64541-80122	91	71492-80010	72
55211-80000	77	62120A83020	87	64550-73A20	88	71493-83000	71
55221-80000	77	62211-70A00	87	64550-73A20	91	71494-80001	71
55221-80000	78	62212T80080	87	64600-50C01	91	71494-80201	71
55311-80000	77	62311-70A00	87	64600-83001	88	71610-83000	72
55311-80000	78	62500-70A30	87	64600-83002	88	71620-83000	72
57000A56C10	71	62500A70A30	87	64600A51C21	91	71631-83000	72
57000C56C11	71	63110-70A00	88	64600A52C21	88	71632-83010	72

NUM. DE PIEZA	PAGIN	NUM. DE PIEZA	PAGIN	NUM. DE PIEZA	PAGIN	NUM. DE PIEZA	PAGIN
71710-83302-5PK	82	73642-83002	22	76120B71A00	114	77614-83021	90
71741-83302	82	73650-83001	22	76120B83000-5GT	114	77614-83021	90
71742-83302	82	73660-83001	22	76120G71A00	114	77614-83021	92
71810A83301-5PK	87	73671-83000-5PK	22	76120I71A00-5GT	114	77614-83021	92
71821-80300	87	73722-63001	87	76140C83000-5PK	95	77620-84C00	108
71822-80300	87	73810-83031	110	76182-58002	99	77630-84C00	108
71824-83300	87	73811-70A00	110	76182-63101	99	77640-50C00-L84	108
71824A83300	87	73811B70A00-5ES	110	76411A80000	111	77640-84C00	108
71825-83300	87	73812-70A01	110	76421-80001	112	77650-50C00-L84	108
71825A83300	87	73812B70A01-5ES	110	77130-70A00-5WA	83	77650-84C00	108
71830-70A20	87	73813-83010-5ES	110	77130-70A00-5WA	90	77716-79000	101
71831A83301	87	73815-70A00	110	77130-70A00-5WA	92	77716-79000	103
71832A83301	87	73821B70A11-5ES	110	77131-83022A	83	77810-60021	94
71833-70A10	87	73823-70A10-5PK	111	77131-83022A	92	77811-50C00-D56	84
71840-70A20	87	73824-83000	111	77131-83022B	83	77811-83060-D56	110
72111A57C10-38B	84	73825-70A00	110	77131-83022B	90	77811C83000	84
72111A70A00A	84	73841A70A00	111	77131-83022B	92	77813-50C00-21G	95
72111A70A00B	84	73842-70A00-5PK	111	77131-83022M	83	77813C80010-21G	95
72111A70A00M	84	73843-70A01-5PK	111	77131-83022M	92	77813D80010	95
72111A70A00N	84	73850A70A00	111	77131-83022N	83	77813E80010	95
72111A70A00P	84	73850C70A00-5PK	111	77131-83022N	92	77813F80010	95
72111A70A00R	84	73910A80000	109	77131-83022P	83	77830-70A00-0DG	83
72111B70A00	84	74100A70A20	23	77131-83022P	92	77830-70A00-19H	83
72115-57C10	84	74100B70A20	23	77131-83022R	83	77830-70A00-1FG	83
72115-70000	86	74172-80000	23	77131-83022R	92	77830-70A00-1FH	83
72115-70A02	84	74250A83021	22	77140-70A00-5WA	83	77830-70A00-26U	83
72116-57C10	84	74259-83000	22	77140-70A00-5WA	90	77830-70A00-37V	83
72261A80002	87	74400A70A00	23	77140-70A00-5WA	92	77830-70A00-38B	83
72272-80000	87	74512-83020	23	77141-83022A	83	77831A60A00	95
72310A70A20	110	74513-70A20	23	77141-83022A	92	77831B60A00	95
72321-80001	110	74514A83000	23	77141-83022B	83	77840-70A00-0DG	83
72411-70A00	82	74611-70A00	22	77141-83022B	90	77840-70A00-19H	83
72411-80000	96	74612-70A00	22	77141-83022B	92	77840-70A00-1FG	83
72412-80000	96	74614-83000	22	77141-83022M	83	77840-70A00-1FH	83
72413-80000	96	74615-70A00	22	77141-83022M	92	77840-70A00-26U	83
72413-80003	96	74812-83001	20	77141-83022N	83	77840-70A00-37V	83
72414-80000-5PK	96	75115-80000	115	77141-83022N	92	77840-70A00-38B	83
72415-80000	96	75115A80000-5PK	115	77141-83022P	83	77841-80001	95
72416-83000	97	75116-80000	115	77141-83022P	92	77891-63100	94
72419-83010	97	75190-83010	115	77141-83022R	83	77891-63100	103
72420-80010-5PK	96	75211A83010	115	77141-83022R	92	78110-79000	103
72430-80002	110	75221-80000	43	77151-82000	72	78111-80141-4KW	93
72441-80001	83	75221A83010	115	77161-80080	94	78141-80102-0DG	93
72441A80001	83	75231-80000	115	77311-80000	90	78141-80102-19H	93
72442-70A01	85	75240A83012	115	77312-80000	90	78141-80102-1FG	93
72442-83002	85	75250-83001	115	77313-80001	90	78141-80102-1FH	93
72450A80001	97	75260-83001	115	77461-78000	101	78141-80102-26U	93
72462-83001	97	75311-57C00	115	77461-78000	103	78141-80102-37V	93
72464-50C00	85	75321-57C00	115	77511-80160	108	78141-80102-38B	93
72464-50C00	86	75322-57C00	115	77512-80160	108	78142A80100	93
72511A60A00	43	75331-57C00	115	77513-80160	108	78142A80100	96
72511A78000	43	75332-57C00	115	77514-80160	108	78199-79000	103
72521A80000	43	75341A57C00	115	77515-80160	108	78241A60002	101
72525-80001	43	75342A57C00	115	77516-80160	108	78242B61000	101
72850-80002	94	75411-83000	72	77591-75000	101	78248	120
72875-80001	94	75411-83000	72	77610-84C00	108	78251-68201	94
72876-80000	87	75511-83031-5PK	115	77611-83020	90	78251-68201	103
73111C70A11	110	75521-83002-5PK	115	77611-83020	92	78261-68201	94
73210-70A00-5PK	22	75530C83002-5JP	115	77613-70A00	90	78261-68201	103
73220-70A00-5PK	22	75530E83002-5JP	115	77613-70A00	90	78271A58053	99

73230-70A00-5PK	22	75540C83002-5JP	115	77613-70A00	92	78306-00000	106
73411A70A00-5ES	111	75610B83020	111	77613-70A00	92	78307-00000	106
73415-70A00	110	76110-83000	114	77613-83021	90	78310-83117-40U	112
73451A70A10	111	76110A71A00	114	77613-83021	90	78310-83117-6EP	112
73609-83021	22	76110B71A00	114	77613-83021	92	78310-83127-45R	112
73613A83000	22	76110B83000-5GT	114	77613-83021	92	78310-83216	112
73616-83022	22	76110G71A00	114	77614-70A00	90	78310-83216-55M	112
73641-83001	22	76110H71A00-5GT	114	77614-70A00	90	78310-83216-6ER	112
73641-83002	22	76120-83000	114	77614-70A00	92	78310-83216-PRB	112
73642-83001	22	76120A71A00	114	77614-70A00	92	78310-83216-PRW	112

NUM. DE PIEZA	PAGIN	NUM. DE PIEZA	PAGIN	NUM. DE PIEZA	PAGIN	NUM. DE PIEZA	PAGIN
78310A83216-55M	112	82160A80010	85	84511-80122	96	85102-83000-T1	117
78310A83216-6ER	112	82171-80100	85	84511-80132	96	85102-83100-MCH	117
78320-00000	107	82191A80002	23	84511-80171	96	85102B83000-CUP	117
78323-00000	107	82191A80002	52	84531-80112	100	85110-84C00-L45	117
78324-00000	106	82191A80002	85	84531-80131	100	85180-83000-L45	116
78325-00000	105	82201-80101	99	84531A80121	100	85180-83100-K58	116
78328-00000	105	82201-80101	101	84536-80112	100	85180B83000	116
78329-00000	105	82202-80101	99	84536-80131	100	85180B83000-CUP	116
78330-00000	105	82202-80101	101	84536A80121	100	85200-84C00-L45	116
78335-00000	105	82270A80100	94	84561-80112	98	85210-83001-5PK	117
78336-00000	105	82270A80100	103	84561-80131	98	85210-84C00-L45	116
78339-00000	105	82270A80100	109	84561A80121	98	85221-82001-5ES	118
78340-00000	107	82270A80100	109	84571-80132	102	85221A82001-5ES	118
78343-00000	105	82280A80100	109	84571-80171	102	85291-80290	118
78350-00000	105	82291-80100	101	84571A80112	102	85301-83172-L45	116
78359-00000	107	82292-80100	101	84611-70A00	96	85301-83201-K58	116
78360-00000	107	82530-80100	103	84621A80101	98	85301A83172	116
78361-00000	107	82550-80082	94	84621B80101	98	85301A83172-CUP	116
78362-00000	106	82581-80100	103	84623A80100	102	85302-83220-T1	117
78366-00000	105	82591-80060	94	84630-80000	99	85302-83221-L45	117
78367-00000	106	82592-80060	94	84640-80020	90	85302-83300-K58	117
78368-00000	105	82610A85000	101	84640-80030	90	85302A83221-CUP	117
78369-00000	105	82681-80100	101	84641-80121	99	85380-83001-L45	117
78372-00000	102	82710B70A00-CUP	113	84642-80120	99	85380-83100-K58	117
78410	71	82720B70A00-CUP	113	84644-80100	99	85380A83001	117
78411-80101	112	82810A80102	101	84644A80001	96	85380A83001-CUP	117
78415-83001	112	82810A80102	103	84644A80100	99	85391-80290	118
78416-83000	112	82820A80102	101	84645A80101	99	85410A79202	18
78463-78000	100	82891A80100	101	84645B80101	99	85410B79202	18
78470-80002	112	82891A80100	103	84645C80101	96	85451-75100	18
78471A79000	101	82960A82100-5ES	100	84646-80000	90	85600-84C00-L45	117
78472A78000	100	82972-82100-5ES	100	84648-80011	97	85610-84C00-L45	117
78476-80001	112	83110A80100	101	84649-80011	97	85680-83000-L45	117
78481-80001	112	83130A80100	101	84650-80030	90	85680-83000-T1	117
78481A79000	101	83211-80100	101	84651-80121	99	85680-83100-K58	117
78482-80301	112	83212-80100	101	84652-80120	99	85680B83000-CUP	117
78484-80300	112	83231-80100	103	84681A80100	102	85700-84C00-L45	117
78485-80000	112	83241-80100	101	84681B80001	94	85710-80290-5PK	117
78488-80000	112	83242-80100	101	84681B80100	102	85710-84C00-L45	117
78490-83000	112	83410-80100	100	84701-83010-5PK	85	85721-82001-5ES	118
78490A83000-5EB	112	83410A80100	100	84701A83010-5PK	85	85721A82001-5ES	118
78490B83000	112	83440-80100	100	84702-83010-5PK	85	85880-83000-T1	117
78491-80011	112	83440A80100	100	84702A83010-5PK	85	85880-83001-L45	117
78491-83000	112	83661-83000	100	84703-80000	96	85880-83100-K58	117
78611-80000	90	83710-84C00	113	84703A80000	96	85880A83001-CUP	117
78621-80001	90	83710E70A00-K59	113	84781-80000	96	85890-83000	118
78651-80000	90	83710F70A00-L46	113	84801-80011-46Z	97	86124A63010	97
78661-80001	90	83710G70A00	113	84802-80011-46Z	97	86169-79000	96
78681A80321	90	83710H70A00	113	84901B80133	121	86211-79000	92
78710-78000	100	83720-84C00	113	84901E80133	121	86401-70A00-5GU	118
78811A78400	100	83720E70A00-K59	113	84904A80132	121	86401B70A00	118
78861-78400	100	83720F70A00-L46	113	84924-80130	121	86710-83030	118
78991-78001	100	83720G70A00	113	85001-72A01-L45	116	86720-83030	118
79100-63850	112	83720H70A00	113	85001-72A10-K58	116	86731-83000	118
79100-63860	112	83771-80100-0DG	102	85001-84C00-L45	116	86732-83030	118
79115-83000	18	83771-80100-19H	102	85001A72A01	116	86736-83000	118
79133-63041	112	83771-80100-1FG	102	85001A72A01-CUP	116	87001-84C00-L45	119
79134-73002	112	83771-80100-1FH	102	85001B72A10	116	87001B83300-L45	120
79161B80000	64	83771-80100-26U	102	85002-70A01-K58	116	87001F83300	120
81111-83000-0CE	98	83771-80100-37V	102	85002-70A10-MCH	116	87002-84C00-L45	119

81411-80100	98	83771-80100-38B	102	85002-84C00	116	87002B83300-L45	120
81430-80102	98	83772-80100	102	85002A70A01	116	87100-84C00	119
81451-80101	98	83811-80100	100	85002A72A01-CUP	116	87110-84C00	119
81451-80102	98	83850-80100	100	85002B70A10	116	87110D83300	120
81730-80101	100	83911-80100	100	85100-84C00-L45	116	87200-84C00	119
81740-80101	100	83912-80100	103	85101-83000-L45	116	87210-84C00	120
81811A80100	99	83914-73062	120	85101-83100-K58	116	87212-80200	120
81860A80100	102	83944-73062	120	85101B83000	116	87214-83000	120
81860B80100	102	84410-70A00-5ES	111	85101B83000-CUP	116	87271A80120	120
82110-80012	85	84422-70A00	111	85102-83000-L45	117	87325-83000	120