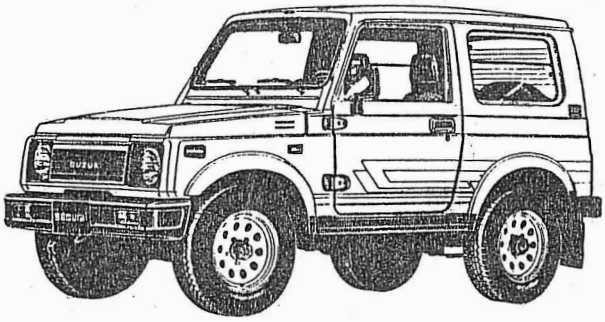

SUZUKI
SANTANA

SJ413 samurai

CATALOGO DE RECAMBIOS

PARTS CATALOGUE

CATALOGUE DE PIÈCES DÉTACHÉES

00000
PUBLICACION / PUBLICATION Nº A00523
ED 3

INDICE – INDEX

FIG. 1 B-02

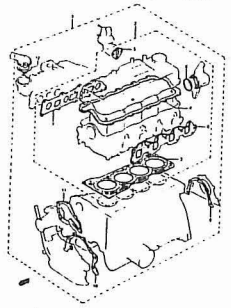

FIG. 2 B-03

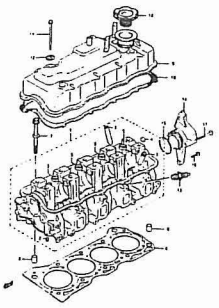

FIG. 3 B-04

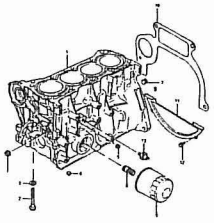

FIG. 4 B-05

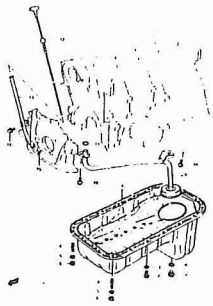

FIG. 5 B-06

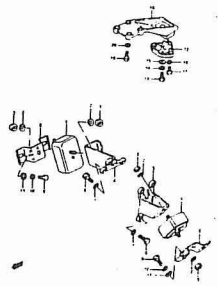

FIG. 6 B-07

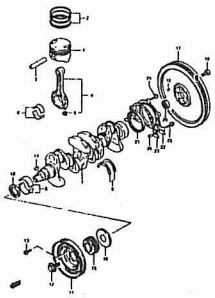

FIG. 7 B-08

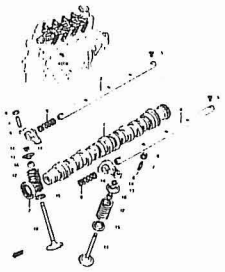

FIG. 8 B-09

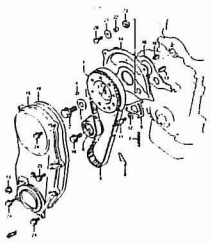

FIG. 9 C-02

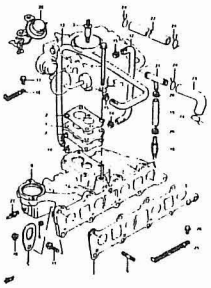

FIG.10 C-03

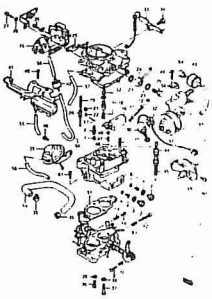

FIG. 11 C-05

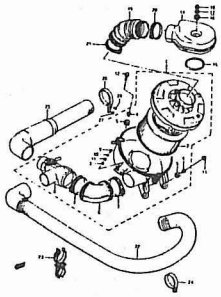

FIG. 12 C-06

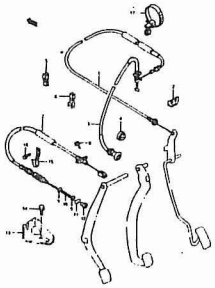

FIG. 13 C-07

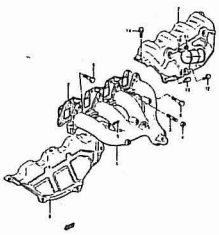

FIG.14 C-08

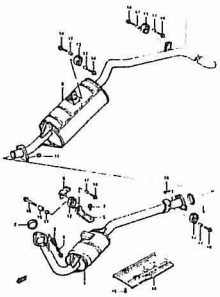

FIG 15 C-09

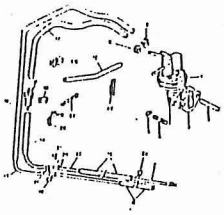

FIG. 16 B-10

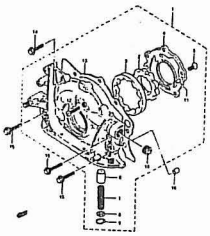

FIG.17 D-02

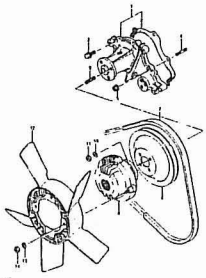

FIG. 18 D-03

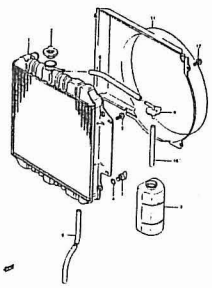

FIG. 19 D-04

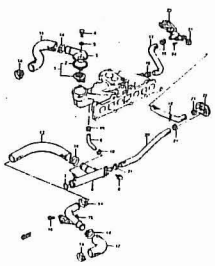

FIG. 20 C-11

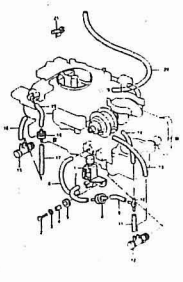

FIG.21 E-02

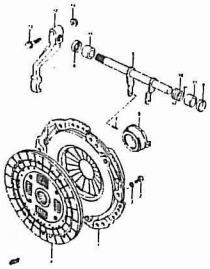

FIG. 22 E-03

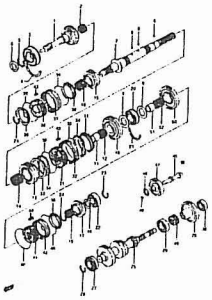

FIG. 23 E-05

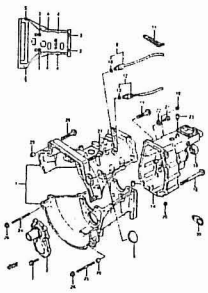

FIG. 24 E-06

FIG. 25 E-07

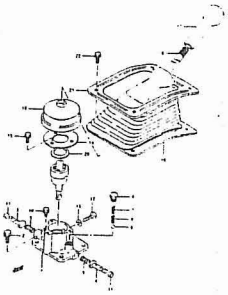

FIG. 26 G-02

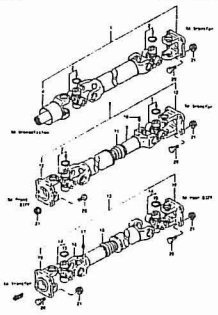

FIG. 27 G-04

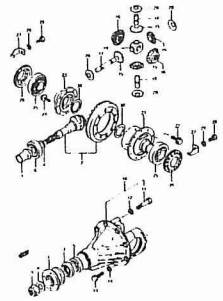

FIG. 28 E-08

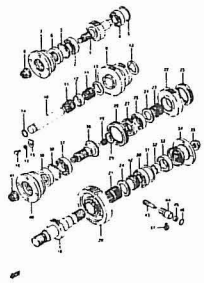

FIG. 29 E-10

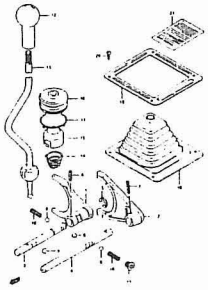

FIG. 30 E-11

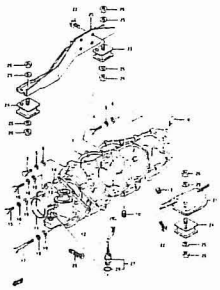

FIG 31 F-02

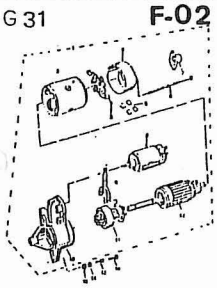

FIG 32 F-05

FIG 32-1 F-03

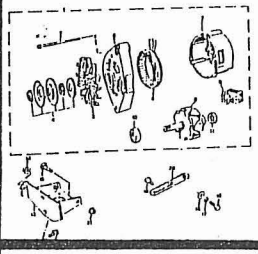

FIG 33 F-04

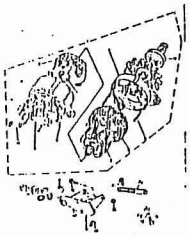

FIG. 34 F-06

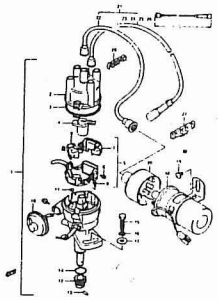

FIG. 35 F-07

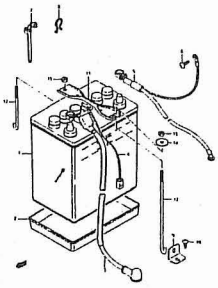

FIG 36 F-08

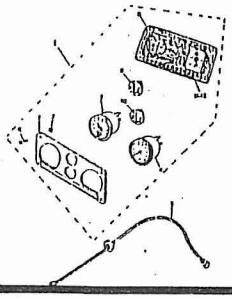

FIG 37 F-09

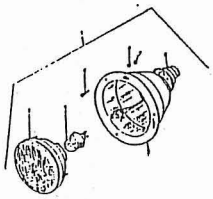

FIG. 38 F-10

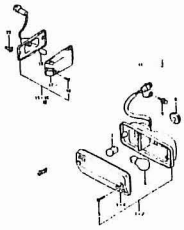

FIG. 39 F-11

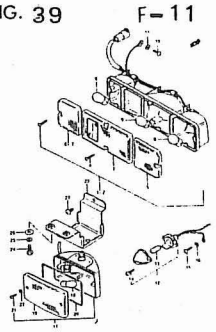

FIG. 40 F-12

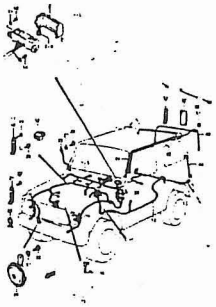

FIG. 41 F-13

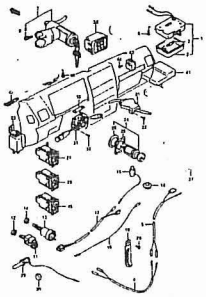

FIG. 42-1 F-14

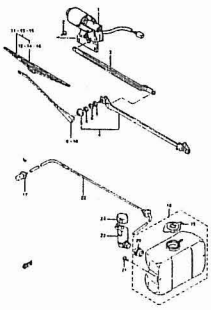

FIG 43 F-15

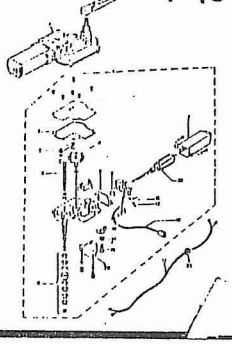

FIG 44 F-16

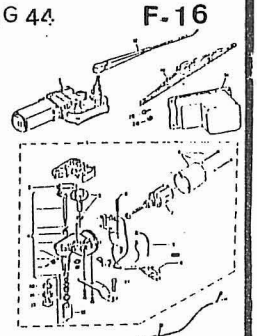

FIG. 45 H 07

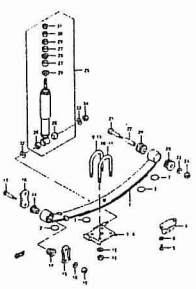

FIG.46 H 08

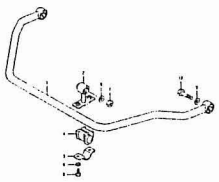

FIG. 47 G-05

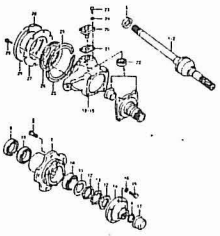

FIG. 48 H 09

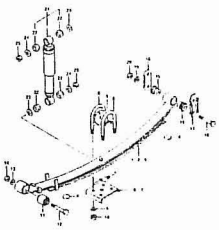

FIG. 49 G-06

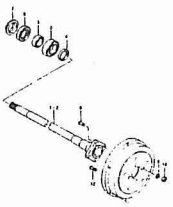

FIG. 50 G - 03

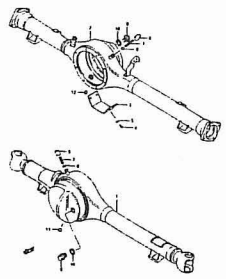

FIG. 51 G - 07

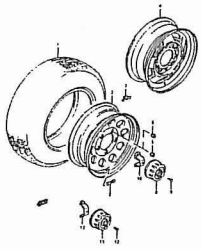

FIG. 52 H - 02

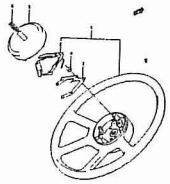

FIG. 53 H - 03

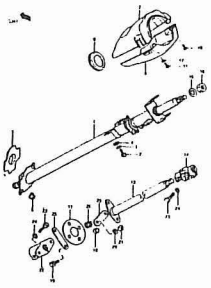

FIG. 54 H - 04

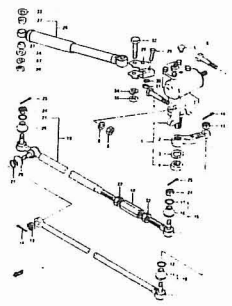

FIG. 55 I - 02

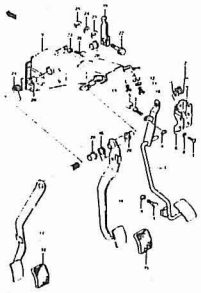

FIG. 56 I - 03

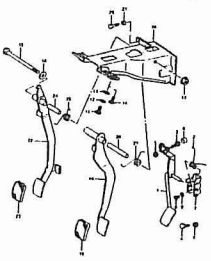

FIG 57 I - 04

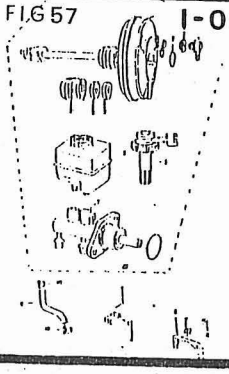

FIG. 58 I - 05

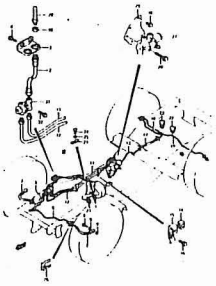

FIG. 59 I - 06

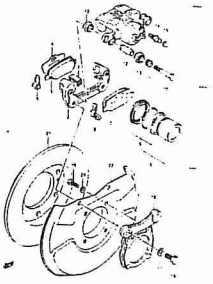

FIG. 60 I - 07

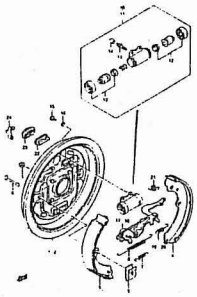

FIG 60 I - 07

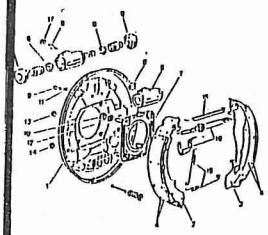

FIG. 61 I - 08

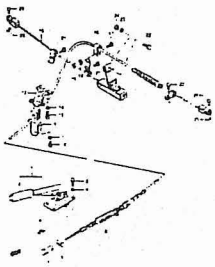

FIG. 63 H 05

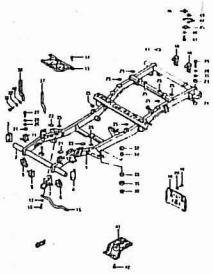

FIG. 64 J - 02

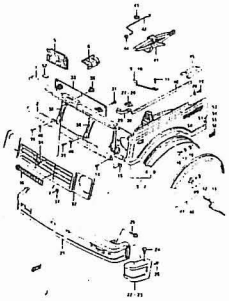

FIG. 65 J - 04

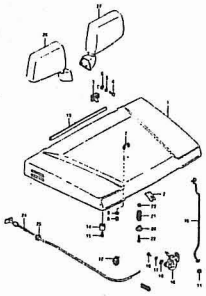

FIG. 66 J - 05

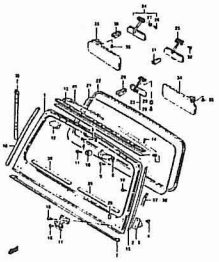

FIG. 67 K - 06

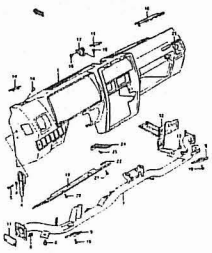

FIG. 68 J - 07

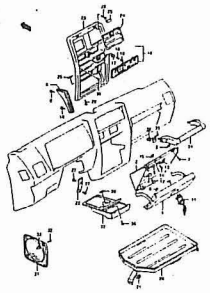

FIG. 69 D - 05

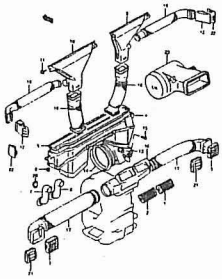

FIG. 70 - 1 D - 06

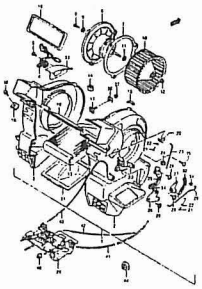

FIG. 72 J - 08

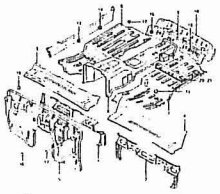

FIG. 73 J - 09

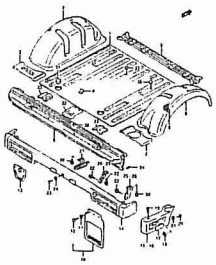

FIG. 74 J - 11

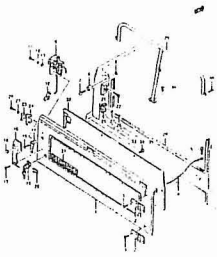

FIG. 75 J - 12

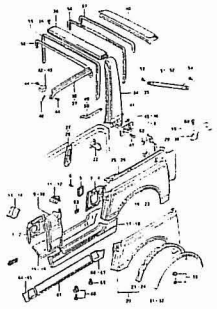

FIG. 76 J-14

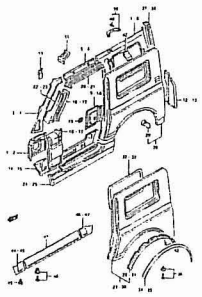

FIG. 77 J-15

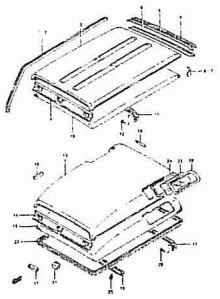

FIG. 78 J-16

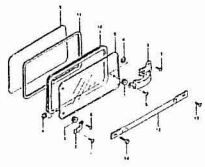

FIG. 79 K-13

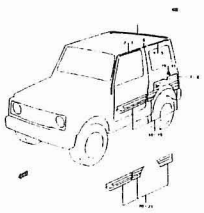

FIG. 80 K-02

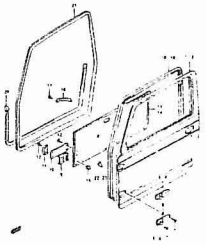

FIG. 81 K-03

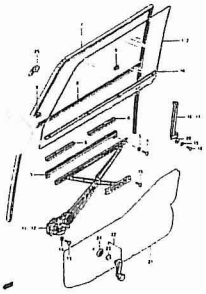

FIG. 82 K-04

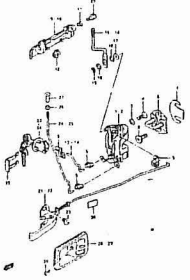

FIG. 83 K-05

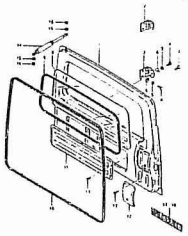

FIG. 84 K-06

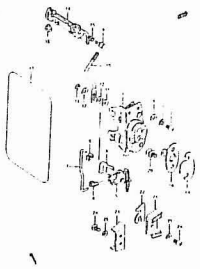

FIG. 85 K-07

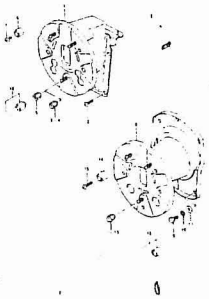

FIG. 86 K-08

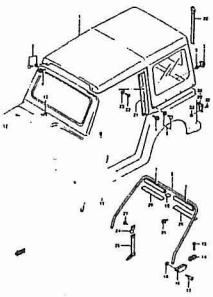

FIG 87 K-11

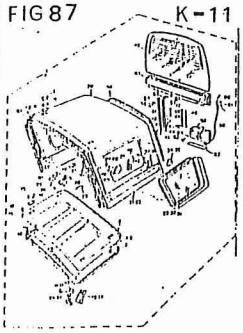

FIG 88 K-09

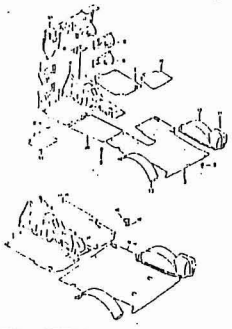

FIG. 89 C-10

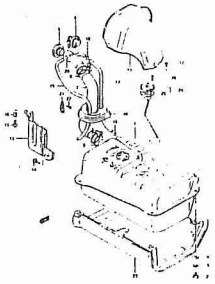

FIG. 90 K-14

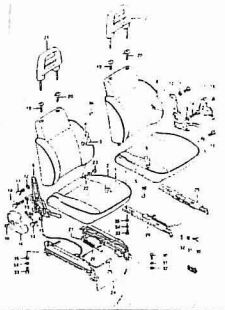

FIG. 91 L-02

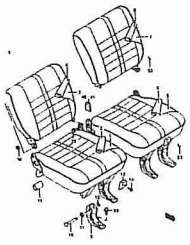

FIG. 92 L-04

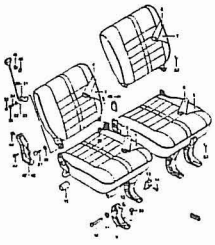

SUZUKI

SANTANA

SJ413

Samurai

CATALOGO DE RECAMBIOS

PARTS CATALOGUE

CATALOGUE DE PIÈCES DÉTACHÉES

PUBLICACION / PUBLICATION Nº A00523

ED. 3

FIG.1

B - 02

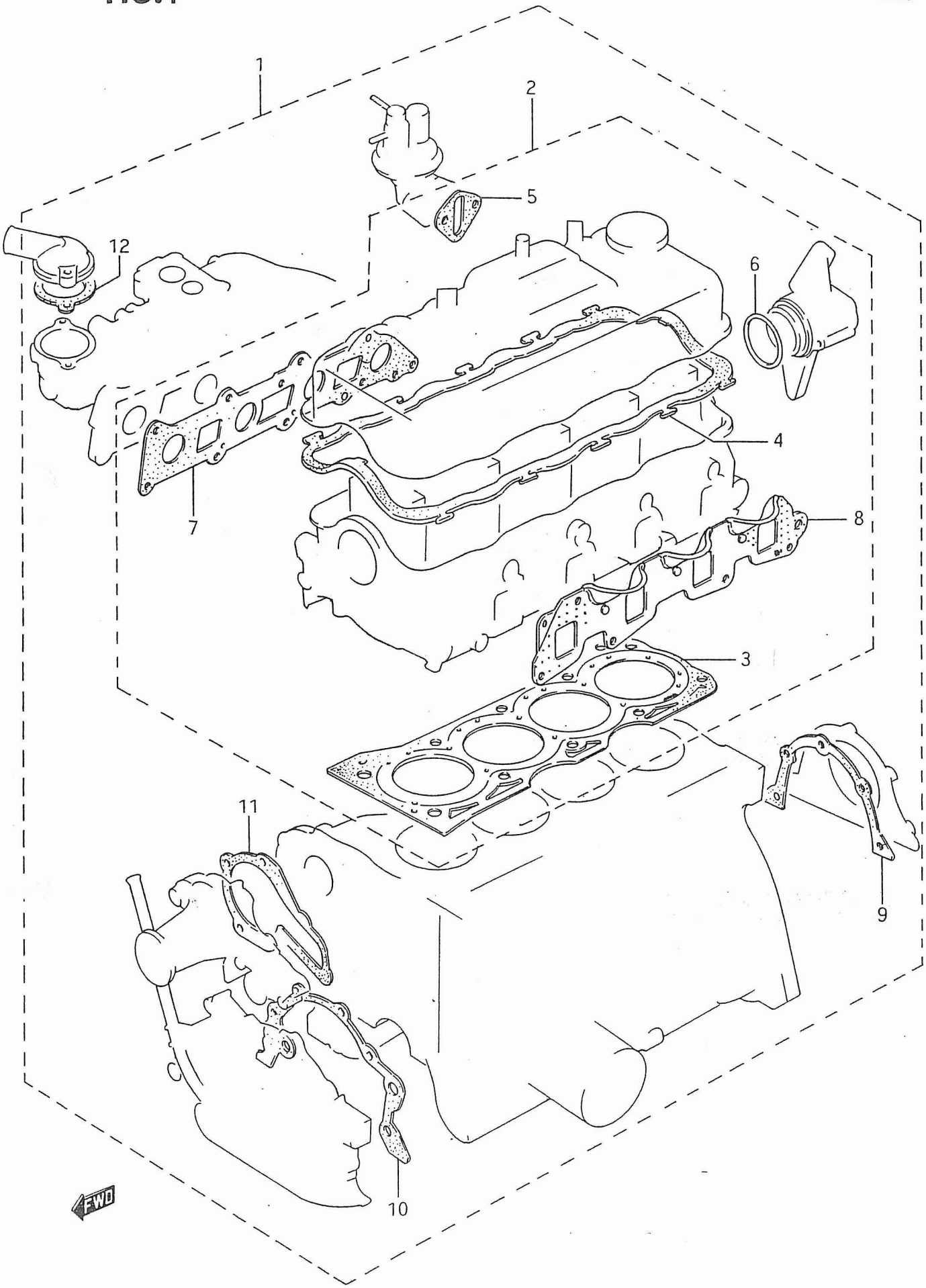

PUBLICACION N:A00523 GRUPO=CATAG SJ-413 SAMURAI SUBGRUPO=1B02JUG.JUNTAS MOTOR
EDICION N: 3 GROUP=CATAG S-413 SAMURAI SUBGROUP=1B02ENGINE GASKET SE
GROUPE=CATAG SJ-413 SAMURAI SUBGROUPE=1B02JEU JOINTS MOTEU

N.FIG PLATE N.FIG	N.PIEZA PARTNUMBER N.PIECE	CAN QTY OUT	DENOMINACION	DESCRIPTION	DENOMINATION	OBSERVACIONES
1	11400-83816	1	JUEGO JUNTAS MOTOR	GASKET SET ENGINE	JEU JOINT MOTEUR	
2	11100-83814	1	JUEGO JUNTAS CULATA	GASKET SET CYL HEAD	JEU JOINT CULASSE	
3	11141-82611	1	JUNTA DE CULATA	GASKET CYLINDER HEAD	JOINT CULASSE	
4	11189A82600	1	JUNTA TAPA BALANCINE	GASKET CYL COVER	JOINT CULBUTEUR	
5	15319-73001	1	JUNTA BOMBA ALIMENT	GASKET FUEL PUMP	JOINT POMPE ALIMENT	
6	09280-56004	1	ANILLO TORICO	O RING	ANNEAU TORIQUE	
7	13119-82601	1	JUNTA COLECTOR ADMIS	GASKET INTAKE MANIFO	JOINT COLLECT ADMIS	
8	14140-83000	1	JUNTA COLECTOR ESCAP	GASKET EXHAUST MANIF	JOINT COLLECT ECHAP	
9	11349-82000	1	JUNTA ALOJMIEN RETEN	GASKET OIL SEAL HOUS	JOINT LOGEMENT ARRET	
10	16119-82000	1	JUNTA BOMBA ACEITE	GASKET OIL PUMP CASE	JOINT POMPE A HUILE	
11	17431-82000	1	JUNTA BOMBA AGUA	GASKET WATER PUMP	JOINT POMPE EAU	
12	17569-80000	1	JUNTA TERMOSTATO	GASKET THERMOSTAT CA	JOINT THERMOSTAT	

FIG. 2

B - 03

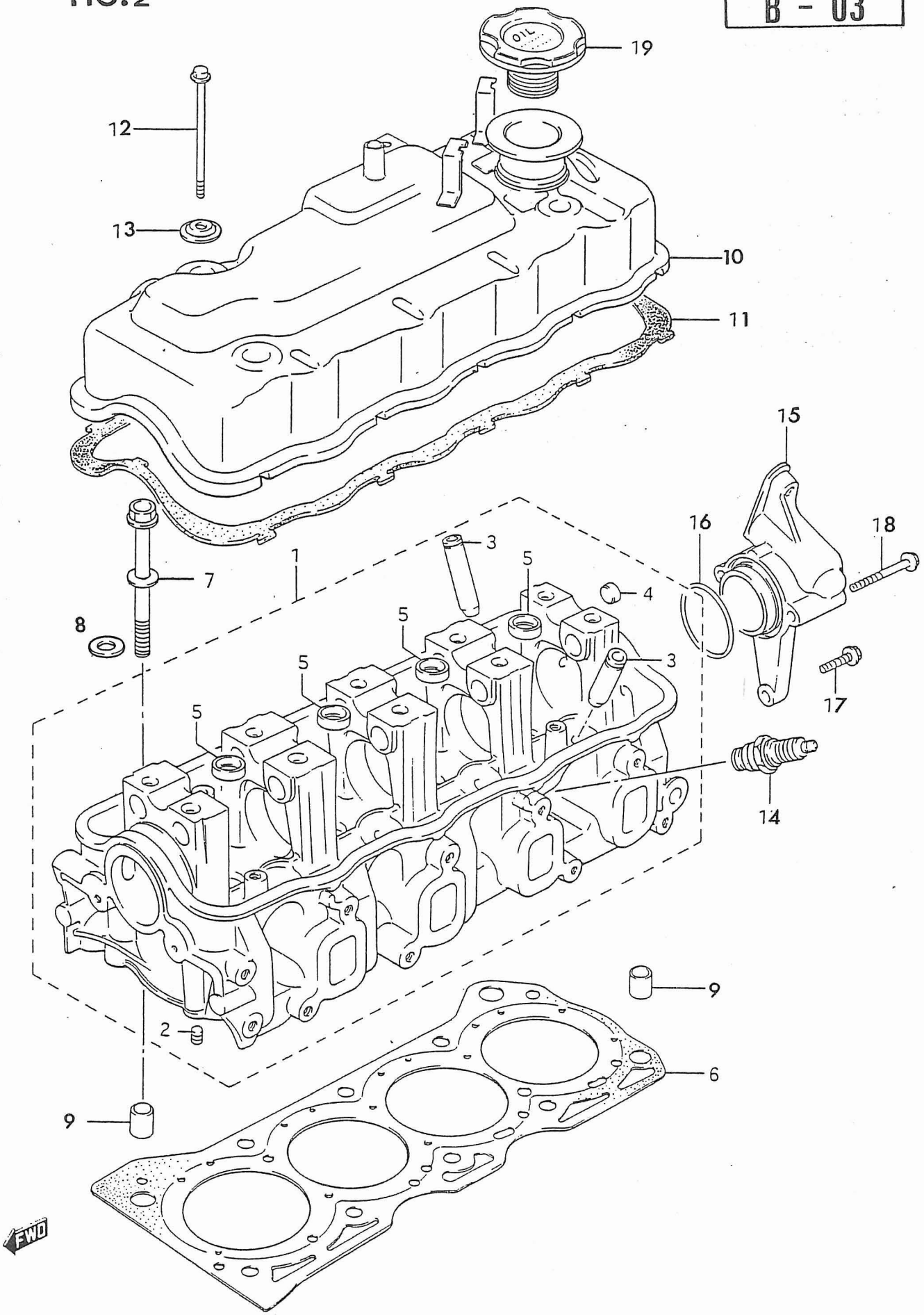

PUBLICACION N:A00523 GRUPO=CATAG SJ-413 SAMURAI SUBGRUPO=1B03 CULATA
EDICION N: 3 GROUP=CATAG S-413 SAMURAI SUBGROUP=1B03CYLINDER HEAD AS
GROUPE=CATAG SJ-413 SAMURAI SUBGROUPE=1B03CULASSE

N.FIG PLATE N.FIG	N.PIEZA PARTNUMBER N.PIECE	CAN QTY OUT	DENOMINACION	DESCRIPTION	DENOMINATION	OBSERVACIONES
1	11110-82602 -JAPO-	1	CULATA	HEAD CYLINDER	ENS CULASSE	
2	11112-73001	1	TAPON ACEITE	PLUG OIL	BOUCHON HUILE	
3	11115-82000	8	GUIA VALVULA	GUIDE VALVE	GUIDE SOUPAPE	
4	09241-12004	1	TAPON	PLUG	BOUCHON	
5	09241-20002	4	TAPON	PLUG	BOUCHON	
6	11141-82611	1	JUNTA DE CULATA	GASKET CYLINDER HEAD	JOINT CULASSE	
7	09103A10066	10	TORNILLO	BOLT	VIS	
8	09160-10072	10	ARANDELA	WASHER	RONDELLE	
9	09206-13001	2	FIJA	PIN	GOUPILLE	
10	11170-83010	1	TAPA DE BALANCINES	COVER CYLINDER HEAD	COUVERCLE CULBUTEUR	
11	11189A82600	1	JUNTA TAPA	GASKET COVER	JOINT	
12	01514-06803	4	TORNILLO	BOLT	VIS	
13	11180-78111	4	ARANDELA GOMA	RUBBER WASHER	RONDELLE CAOUTCHOUC	
14	09482-00155	4	BUJIA NGK BPR5ES	PUE SPARK NGK BPR5E	BOUGIE NGK BPR5ES	
	09482-00167	4	BUJIA ND W16EXR-U	PLUE SPARK ND W16EXP	BOUGIE ND W16EXR-U	
	09482A00155	4	BUJIA CHAMPION N9YC	PLUG SPARK CHAMPION	BOUGIE CHAMPION N9YC	
15	11161-83000	1	ALOJAMIENTO DISTRIBU	CASE DISTRIBUTOR	CARCASSE DISTRIBUTEU	
16	09280-56004	1	JUNTA TORICA	O RING	JOINT TORIQUE	
17	01517-06256	2	TORNILLO	BOLT	VIS	
18	01517-06506	1	TORNILLO	BOLT	VIS	
19	16920-60A00	1	TAPON LLENADO	CAP OIL FILLER	BOUCHON D HUILE	

FIG.3

B - 04

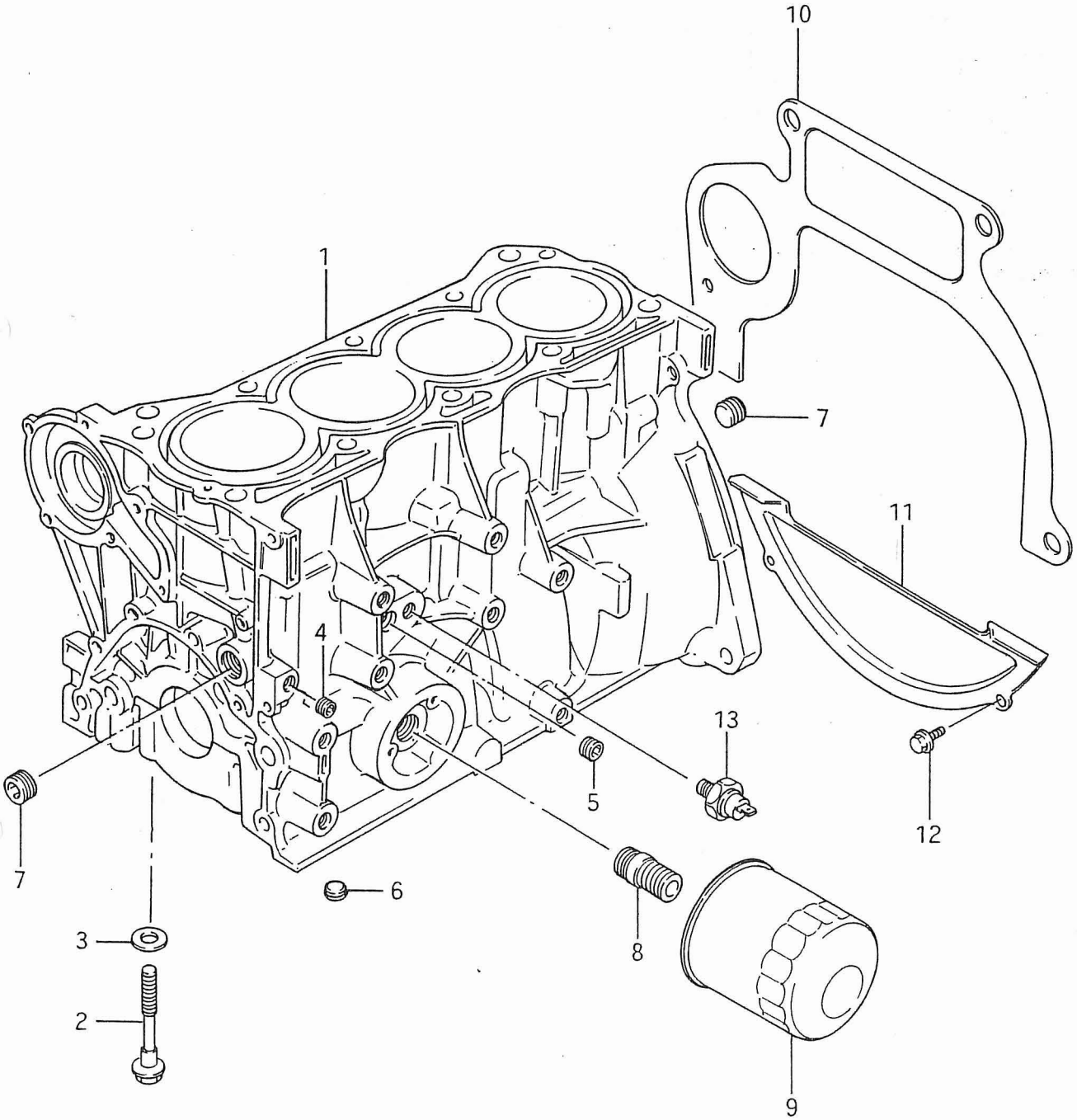

FWD

PUBLICACION N:A00523 GRUPO=CATAG SJ-413 SAMURAI SUBGRUPO=1B04BLOQU.CILINDROS
EDICION N: 3 GROUP=CATAG S-413 SAMURAI SUBGROUP=1B04CYLINDER BLOCK
GROUPE=CATAG SJ-413 SAMURAI SUBGROUPE=1B04BLOC CYLINDRE

N.FIG PLATE N.FIG	N.PIEZA PARTNUMBER N.PIECE	CAN QTY OUT	DENOMINACION	DESCRIPTION	DENOMINATION	OBSERVACIONES
1	11200-82604	1	CONJ BLOQUE CILINDRO	BLOCK ASSY CYLINDER	BLOC CYLINDRE	
2	09103-10067	1	TORNILLO	BOLT	VIS	
3	09160-10039	10	ARANDELA	WASHER	RONDELLE	
4	09246-05003	1	TAPON GALERIA ACEITE	PLUG OIL GALY	BOUCHON GALERIE HUIL	
5	09246-06002	1	TAPON GALERIA ACEITE	GALERY OIL PLUG	BOUCHON GALERIE HUIL	
6	09246-06001	1	TAPON GALERIA ACEITE	PLUG OIL GALY	BOUCHON GALERIE HUIL	
7	09246-08002	2	TAPON GALERIA ACEITE	PLUG OIL GALY	BOUCHON GALERIE HUIL	
8	11241-82010	1	ADAPTADOR FILTRO	STAND OIL FILLER	ADAPTEUR FILTRE	
9	16510B83000	1	FILTRO ACEITE	FILTER ASSY OIL	FILTRE D'HUILE	
10	11311-83000	1	PLACA SUP EMBRAGUE	PLATE CLUCH HOUSING	PLAQUE SUP EMBRAYAGE	
11	11320-83000	1	PLACA INF EMBRAGUE	PLATE CLUCH LOWER	PLAQUE INF EMBRAYAGE	
12	01514-06103	2	TORNILLO	BOLT	VIS	
13	37820A82000	1	INTERRUPTOR	SWITCH OIL PR ES	INTERRUPTEUR	

FIG.4

B - 05

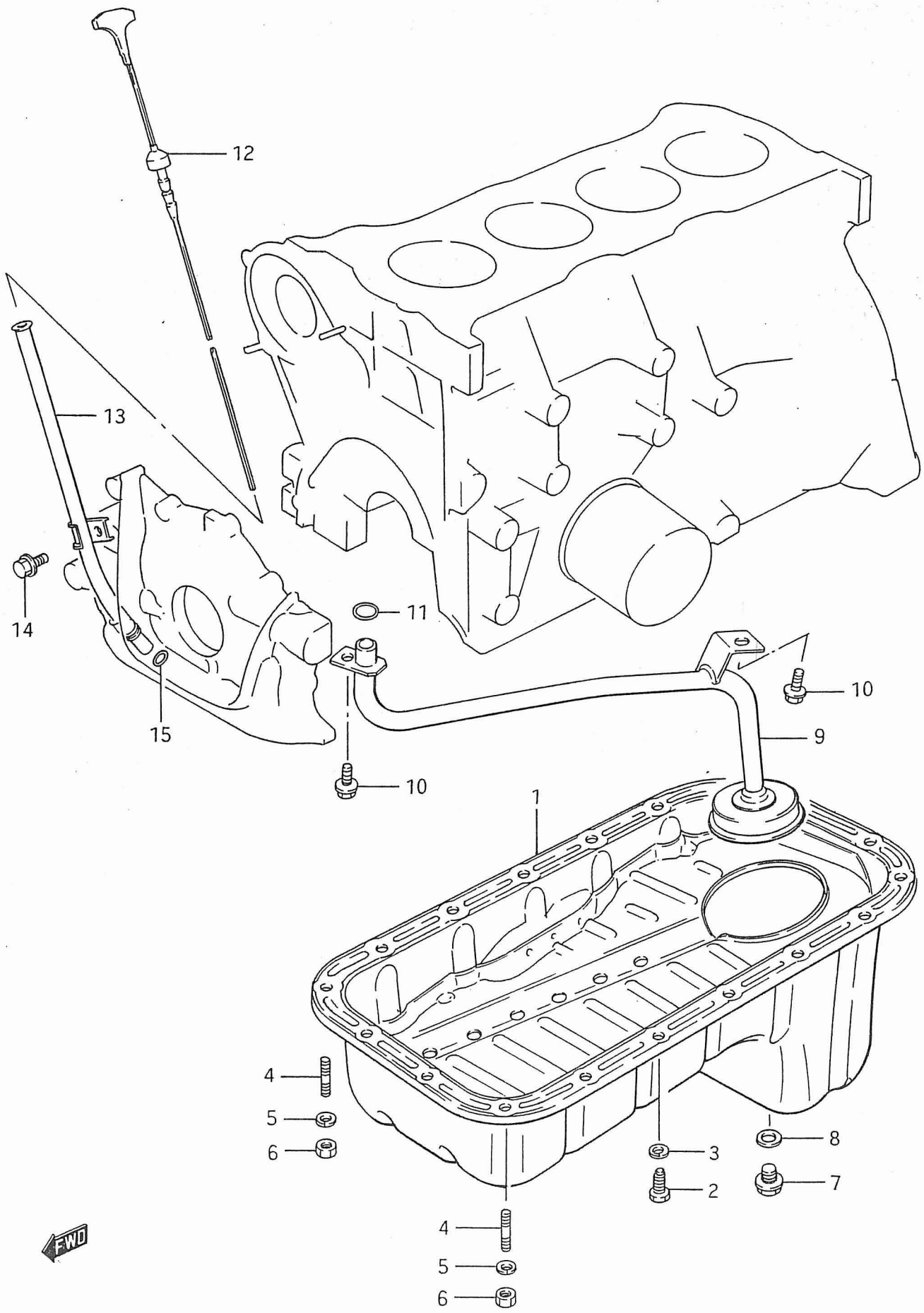

PUBLICACION N:A00523 GRUPO=CATAG SJ-413 SAMURAI SUBGRUPO=1B05CARTER DE ACEITE
EDICION N: 3 GROUP=CATAG S-413 SAMURAI SUBGROUP=1B05PAN OIL
GROUPE=CATAG SJ-413 SAMURAI SUBGROUPE=1B05CARTER D'HUILE

N.FIG PLATE N.FIG	N.PIEZA PARTNUMBER N.PIECE	CAN QTY OUT	DENOMINACION	DESCRIPTION	DENOMINATION	OBSERVACIONES
1	11510-83003	1	CARTER DE ACEITE	PAN OIL	CARTER D'HUILE	
2	09100A06116	16	TORNILLO	BOLT	VIS	
3	08321A31066	16	ARANDELA GROWER	LOC WASHER	RONDELLE GROWER	
4	01411-06123	2	ESPARRAGO	STUD BOLT	GOUJON	
5	08321A31063	2	ARANDELA	LOCK WASHER	RONDELLE	
6	08310-11063	2	TUERCA	NUT	ECROU	
7	09247A14027	1	TAPON VACIADO	PLUG DRAIN	BOUCHON VIDANGE	
8	09168A14012	1	JUNTA	GASRET	JOINT	
9	16520-83002	1	FILTRO ASPIRAC BOMBA	STRAIVER OIL PUMP	FILTRE POMPE	
10	01517-06126	2	TORNILLO	BOLT	VIS	
11	09280-14009	1	ANILLO TORICO	O-RING	ANNEAU TORIQUE	
12	16910-83000	1	VARILLA NIVEL	GAUGE OIL LEVEL	JAUGE D'HUILE	
13	16930-82001	1	GUIA VARILLA NIVEL	GUIDE OIL LEVEL	GUIDE JAUGE	
14	01517-06126	1	TORNILLO	BOLT	VIS	
15	09280-10005	1	ANILLO TORICO	O-RING	ANNEAU TORIQUE	

FIG.5

B - 06

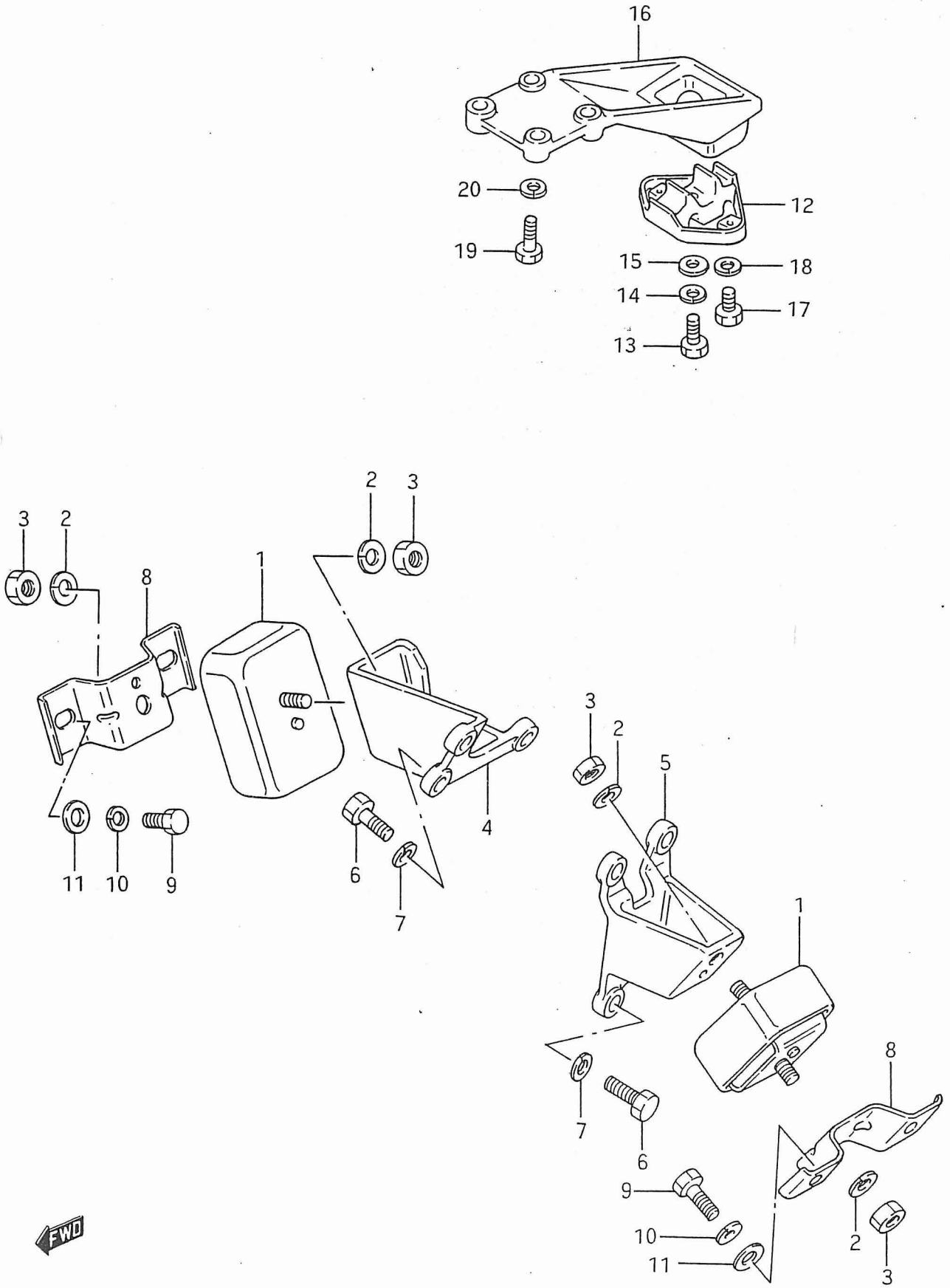

PUBLICACION N:A00523 GRUPO=CATAG SJ-413 SAMURAI SUBGRUPO=1B06SOPORTE DE MOTOR
EDICION N: 3 GROUP=CATAG S-413 SAMURAI SUBGROUP=1B06MOUNTING ENGINE
GROUPE=CATAG SJ-413 SAMURAI SUBGROUPE=1B06SUPPORTS MOTEUR

N.FIG PLATE N.FIG	N.PIEZA PARTNUMBER N.PIECE	CAN QTY OUT	DENOMINACION	DESCRIPTION	DENOMINATION	OBSERVACIONES
1	11610A80010	2	SOPORTE DELANTERO	MOUNTING ENGINE FRON	SUPPORT AVANT MOTEUR	
2	08321B31103	4	ARANDELA	WASHER	RONDELLE	
3	08310-12103	4	TUERCA	NUT	ECROU	
4	11641-83000	1	SOPORTE DELANTERO LD	BRACKET FRONT RH	SUPPORT AVANT CD	
5	11651-83000	1	SOPORTE DELANT LI	BRACKET FRONT LH	SUPPORT AVANT CG	
6	01107-10303	7	TORNILLO	BOLT	VIS	
7	08321B31103	7	ARANDELA	WASHER	RONDELLE	
8	11661-83000	2	SOPORTE LADO CUERPO	BRACKET BODY SIDE	SUPPORT	
9	01707-10303	4	TORNILLO	BOLT	VIS	
10	08321A31106	4	ARANDELA	WASHER	RONDELLE	
11	09160-10001	4	ARANDELA	WASHER	RONDELLE	
12	11710A80000	1	SOPORTE TRASERO	MOUNTING ENGINE REAR	SUPPORT ARR. MOTEUR	
13	01107-08203	1	TORNILLO	BOLT	VIS	
14	08321B31086	1	ARANDELA	WASHER	RONDELLE	
15	08322-11083	1	ARANDELA	WASHER	RONDELLE	
16	11741-80010	1	SOPORTE TRASERO	BRACKET REAR MOUNTIN	SUPPORT ARRIERE	
17	01107-08163	2	TORNILLO	BOLT	VIS	
18	08321B31086	2	ARANDELA	WASHER	RONDELLE	
19	01107-08303	4	TORNILLO	BOLT	VIS	
20	08321B31086	4	ARANDELA	WASHER	RONDELLE	

FIG.6

B - 07

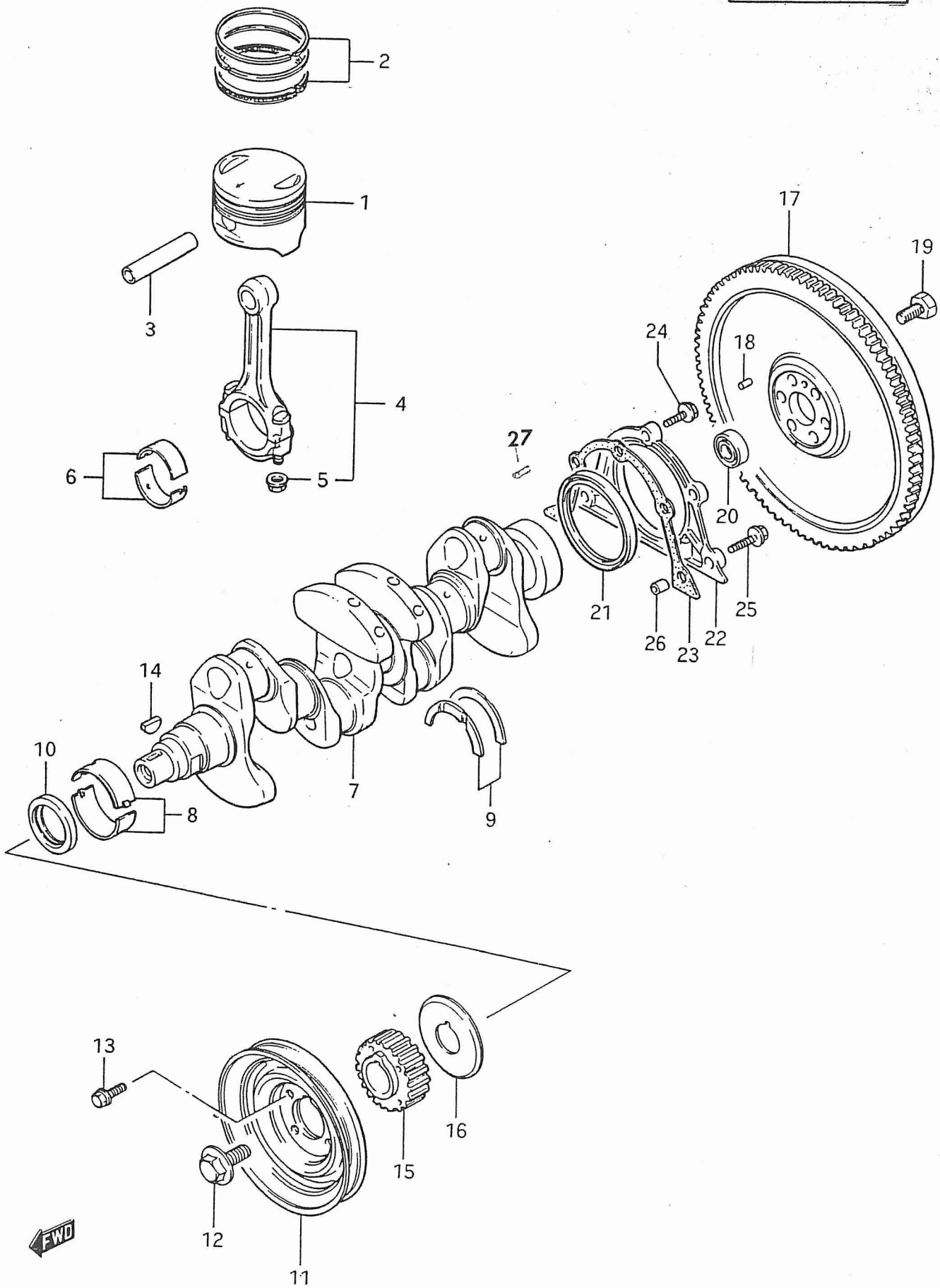

PUBLICACION N:A00523 GRUPO=CATAG SJ-413 SAMURAI SUBGRUPO=1B07CIGUE\AL VOL.MOT
EDICION N: 3 GROUP=CATAG S-413 SAMURAI SUBGROUP=1B07CRANKSHAFT
GROUPE=CATAG SJ-413 SAMURAI SUBGROUPE=1B07VILEBREQUIN

N.FIG PLATE N.FIG	N.PIEZA PARTNUMBER N.PIECE	CAN QTY OUT	DENOMINACION	DESCRIPTION	DENOMINATION	OBSERVACIONES
1	12111-83000-025	4	PISTON 025	PISTON 025	PISTON 025	
	12111-83000-050	4	PISTON 050	PISTON 050	PISTON 050	
	12111-83000-0A0	4	PISTON STD MARCA 1	PISTON STD MARK 1	PISTON STD MARQUE 1	
	12111-83000-0B0	4	PISTON STD MARCA 2	PISTON STD MARK 2	PISTON STD MARQUE 2	
2	12140-82050-025	4	JUEGO SEGMENTOS 025	RING SET 025	JEU SEGMENTS 025	
	12140-82050-050	4	JUEGO SEGMENTOS 050	RING SET 050	JEU SEGMENTS 050	
	12140-82051	4	JUEGO SEGMENTOS STD	RING SET STD	JEU SEGMENTS STD	
3	12151A82000	4	BULON PISTON	PIN PISTON	BOULON PISTON	
4	12160-86001	4	CONJ.BIELA	ROD ASSY	ENS BIELLE	
5	09159-08033	4	TUERCA BIELA	NUT	ECROU BIELLE	
6	12100-82810	4	COJINETES BIELA STD	BEARING SET STD	COUSSINET BIELLE STD	
	12100-82810-025	4	JUEGO SEMI-COJINETE	BEARING SET 025	COUSSINET BIELLE 025	
7	12221-82600	1	CIGUENAL	CRANKSHAFT	VILEBREQUIN	
8	12300-82810-0AA	5	COJINETE 025 ROJOS	BEARING SET, 025	JEU COUSSINET 025 RO	ROJO-VERDE
	12300-82810-0BA	5	JUEGO COJINE 025 NEG	BEARING SET 025 BLAC	JEU COUSSI 025 NOIRE	ROJO-NEGRO
	12300-82810-0DA	5	JGO COJINE 025 AMARI	BEARING SET 025 YELL	JEU COUSIN 025 JAUNE	ROJO-AMARILLO
	12300-82810-0EA	5	JGO COJINET 025 AZUL	BEARING SET 025 BLUE	JEU COUSSINE 025 BLE	ROJO-AZUL
	12340-82000-0A0	5	JGO COJINETE VERDE	BEARING SET GREEN	JEU COUSSINET VERT	VERDE
	12340-82000-0B0	5	JGO COJINE STD NEGRO	BEARING SET BLACK ST	JEU COUSSI NOIRE STD	NEGRO
	12340-82000-0CD	5	JGO COJINETE STD BLA	BEARING STE WAITE	JEU COUSSINE STD BLA	
	12340-82000-0D0	5	JGO COJINETE STD AMA	BEARING SET YELLOW S	JEU COUSSINE JAUNE S	AMARILLO
	12340-82000-0E0	5	JGO COJINETE STD AZU	BEARING SET STD BLUE	JEU COUSSINE STD BLE	AZUL
9	12351-82000	2	SEMI COJINETE EMPUJE	BEARING CRANK THRUST	COUSSINET DE POURSSE	
10	09283-32026	1	RETEN DELANTERO	SEAL FRONT OIL	ARRETOIR AVANT	
11	12610-82000	1	POLEA CIGUE/AL	PULLEY CRANKSHAFT	POULIE VILEBREQUIN	
12	09103A12008	1	TORNILLO	BOLT	VIS	
13	01517-06203	4	TORNILLO	BOLT	VIS	
14	08341-31059	1	CHAVETA	KEY	CLAVETTE	
15	12631-82000	1	ENGRANAJE DISTRIBUC	PULLEY CRANK TIMING	ENGRENAGE DISTRIBUTI	
16	12635-78400	1	GUIA CORREA	GUIDE TIMING BELT	GUIDE COURROIE	
17	12620-83000	1	VOLANTE MOTOR	FLYWHEEL	VOLANT MOTEUR	
18	04221-06129	1	FIJA	PIN	GOND	
19	09103-10068	6	TORNILLO	BOLT	VIS	
20	12623-60A00	1	RODAMIENTO EMPUJE	BEARING INPUT SHAFT	ROULEMENT	
21	09283-68001	1	RETEN TRASERO	SEAL REAR OIL	ARRETOIR ARRIERE	
22	11341-82000	1	ALOJAMIENTO RETEN	HOUSING OIL SEAL	CARCASSE ARRETOIR	
23	11349-82000	1	JUNTA	GASKET	JOINT	
24	01517-06203	3	TORNILLO	BOLT	VIS	
25	01517-06256	2	TORNILLO	BOLT	VIS	
26	04211A09109	2	FIJA	PIN	GOND	
27	09202A06004	3	FIJA	PIN	GOND	

FIG.7

B - 08

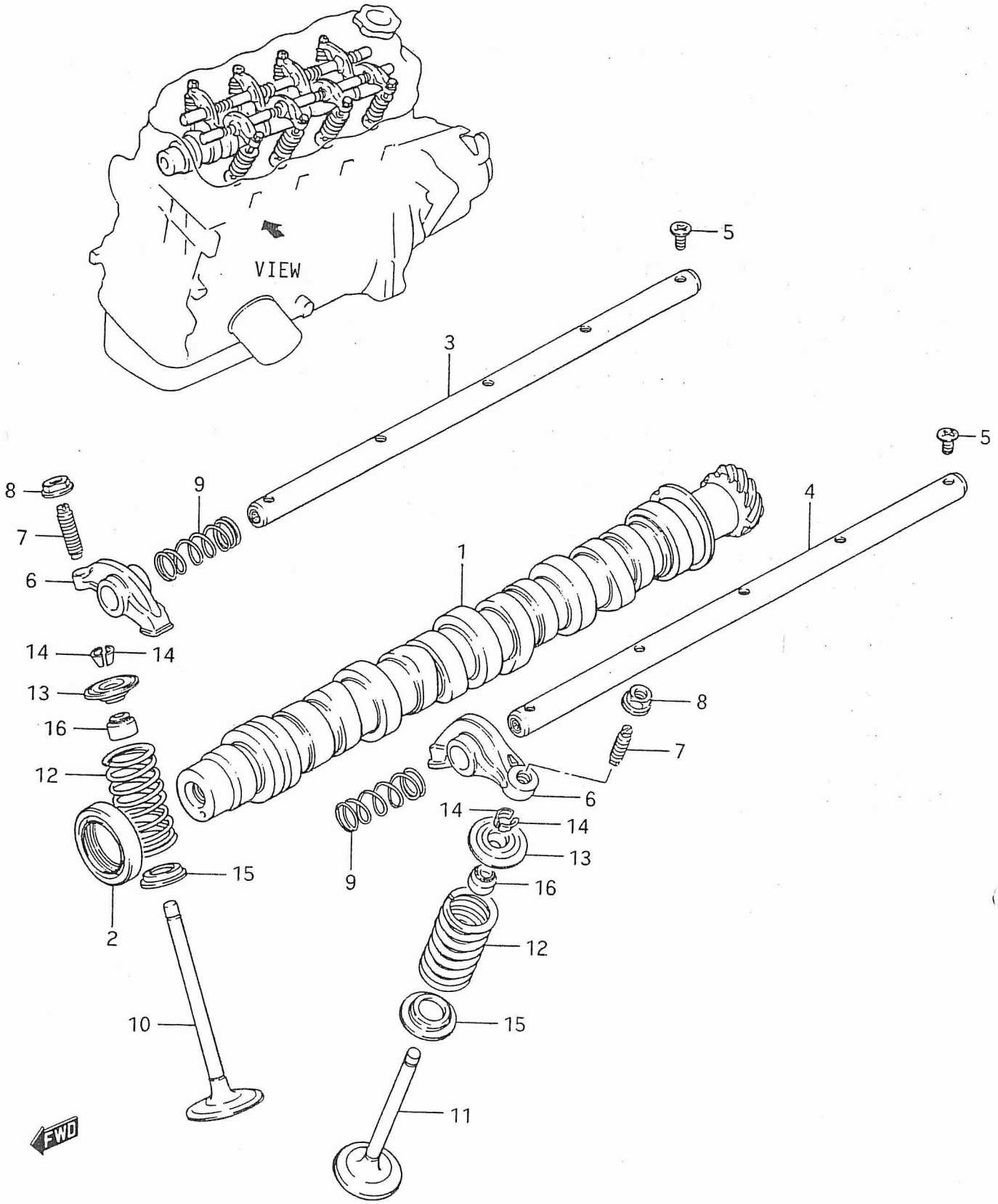

PUBLICACION N:A00523 GRUPO=CATAG SJ-413 SAMURAI SUBGRUPO=1B08ARBOL LEVAS VALV
EDICION N: 3 GROUP=CATAG S-413 SAMURAI SUBGROUP=1B08SHAFT AND VALVES
GROUPE=CATAG SJ-413 SAMURAI SUBGROUPE=1B08ARBRE DE CAMES

N.FIG PLATE N.FIG	N.PIEZA PARTNUMBER N.PIECE	CAN QTY OUT	DENOMINACION	DESCRIPTION	DENOMINATION	OBSERVACIONES
1	12710-83000	1	ARBOL DE LEVAS	CAMSHAFT	ARBRE A CAMES	H MOTOR 23862
	12710-83010	1	ARBOL DE LEVAS	CAMSHAFT	AREBRE A CAMES	D MOTOR 23863
2	09283-32022	1	RETEN ARBOL LEVAS	SEAL CAMSHAFT	ARRETOIR ARBRE	
3	12860A82600	1	EJE ADMISION BALANC	SHATR INTAKE ROCKER	AXE D.ADMISSION	
4	12870A82600	1	EJE ESCAPE BALANCIN	SHAFT EXHUST ROCKER	AXE D ECHAPPEMENT	
5	02122-06106	10	TORNILLO	SCREW.	VIS	
6	12841-60A01	8	BALANCIN	ARM VALVE	CULBUTEUR	D MOTOR 23863
	12841-82000	8	BALANCIN	ARM VALVE	CULBULTEUR	H MOTOR 23862
7	12848-82000	8	TORNILLO AJUSTE	SCREW VALVE ADJUSTIN	VIS DE REGLAGE	
8	09159-07004	8	TUERCA	NUT	ECROU	
	12891-82001	8	MUELLE BALANCIN	SPRING ROCKER	RESSORT CULBUTEUR	
10	12911A82000	4	VALVULA ADMISION	VALVE INSTAKE	SOUPAPE D'ADMISSION	
11	12915A82050	4	VALVULA ESCAPE	VALUE EXHAUST	SOUPAPE D'ECHAPPEMEN	
12	12921-82000	8	MUELLE VALVULA	SPRING VALVE	RESSORT SOUPAPE	
13	12931-82000	8	RETENEDOR MUELLE	RETAINER VALVE SPRIN	ARRET RESSORT	
14	12932-82000	16	FIADOR	COTTER VALVE	GOUPILLE	
15	12933-73000	8	ASIENTO MUELLE VALVU	SEAT VALVE SPRING	SIEGE RESSORT SOUPAP	
16	09289-07005	8	RETEN	SEAL	ARRETOIR	

FIG. 8

B - 09

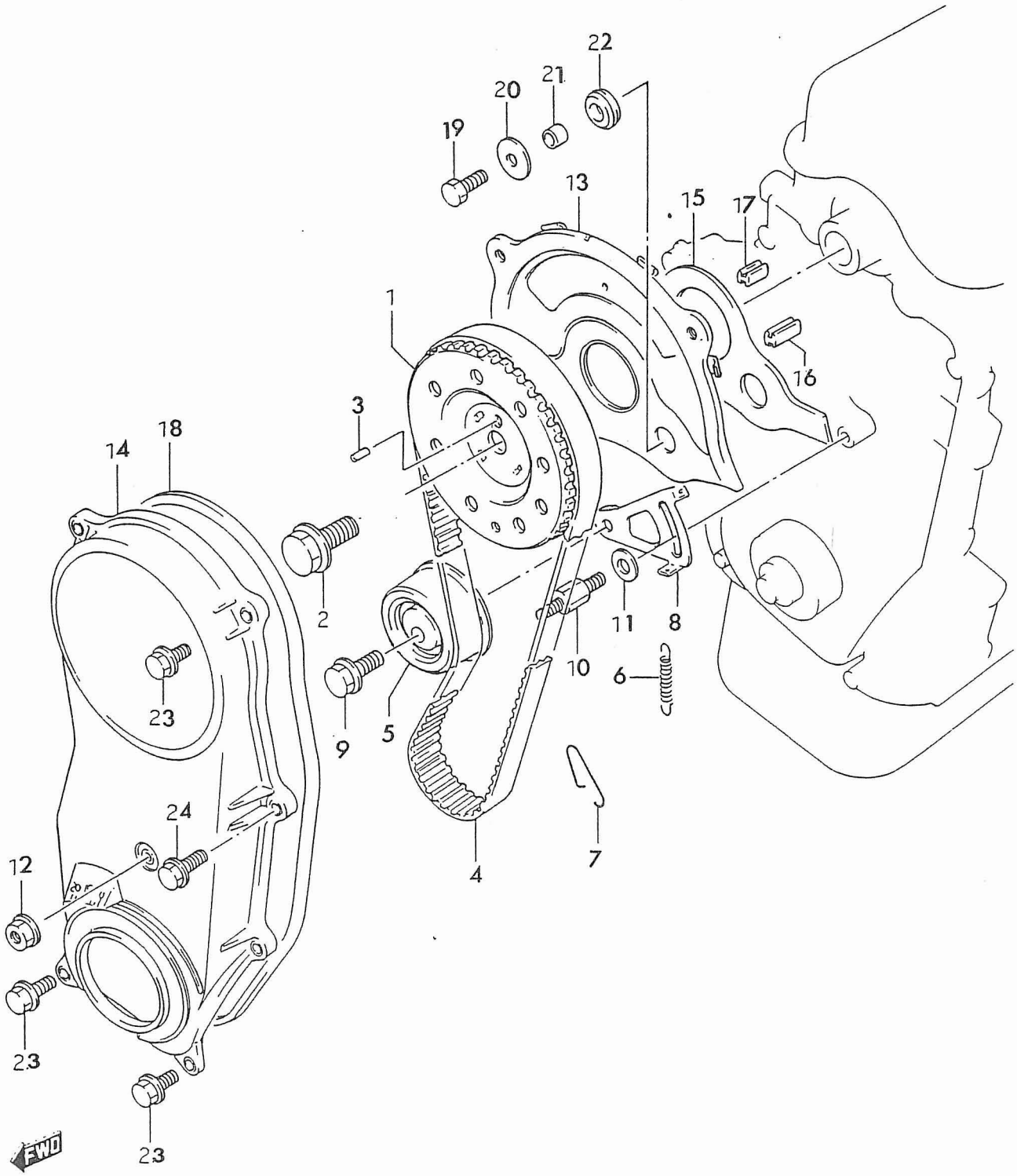

PUBLICACION N:A00523 GRUPO=CATAG SJ-413 SAMURAI SUBGRUPO=1B09DISTRIBUCION
EDICION N: 3 GROUP=CATAG S-413 SAMURAI SUBGROUP=1B09TIMING BELT COVE
GROUPE=CATAG SJ-413 SAMURAI SUBGROUPE=1B09DISTRIBUTION

N.FIG PLATE N.FIG	N.PIEZA PARTNUMBER N.PIECE	CAN QTY OUT	DENOMINACION	DESCRIPTION	DENOMINATION	OBSERVACIONES
1	12741-82010	1	POLEA ARBOL LEVAS	PULLEY TIMING BELL	POULIE ARBRE A CAMES	
2	09103-12002	1	TORNILLO	BOLT	VIS	
3	04221-05109	1	FIJA	KNOR PIN	CLAVETTE	D 18664
	09202-05027	1	FIJA	KNOR PIN	CLAVETTE	H 18663
4	12761A82000	1	CORREA DISTRIBUCION	TIMING BELT	COURROIE DISTRIBUTIO	
5	12810-82002	1	CONJ TENSOR CORREA	TENSIONER TIMING BEL	TENDEUR COURROIE	
6	12821-82001	1	MUELLE TENSOR	SPRING TENSIONER	RESORT TENDEUR	
7	12823-82001	1	TENSOR MUELLE	DAMPER TENSIONER	TENDEUR RESSORT	
8	12822-82001	1	PLACA TENSOR	PLATE TENSIONER	PLAQUE TENDEUR	
9	01517-08356	1	TORNILLO	BOLT	VIS	
10	09108-06056	1	ESPARRAGO	STUD BOLT	GOUJON	
11	09160-06057	1	ARANDELA	WASHER	RONDELLE	
12	08316A16063	1	TUERCA	NUT	ECROU	
13	11380-83000	1	TAPA INTERIOR CORREA	COVER TIMING BELT IN	COUVERCLE INT COURRO	
14	11390-82010	1	TAPA EXT CORREA	COVER TIMING BELT OU	COUVERCLE EXT COURRO	
15	11383-82000	1	RETENTAPA INTERIOR	SEAL INSIDE COVER	ARRETOIR INT COUVERC	
16	11394-82000	1	RETEN	SEAL	ARRETOIR	
17	11395-82000	1	RETEN	SEAL	ARRETOIR	
18	11396-82000	1	RETEN TAPA EXT	SEAL OUTSIDE COVER	ARRETOIR EXT	
19	01107-06206	2	TORNILLO	BOLT	VIS	
20	09160-06027	2	ARANDELA	WASHER	RONDELLE	
21	09180-06106	2	CASQUILLO	SPACER	BAGUE	
22	09308-10004	2	A. GOMA	GROMMET	RONDELLE CAOUTCHOUC	
23	01517-06166	3	TORNILLO	BOLT	VIS	
24	01517-06203	5	TORNILLO	BOLT	VIS	

FIG.9

C - 02

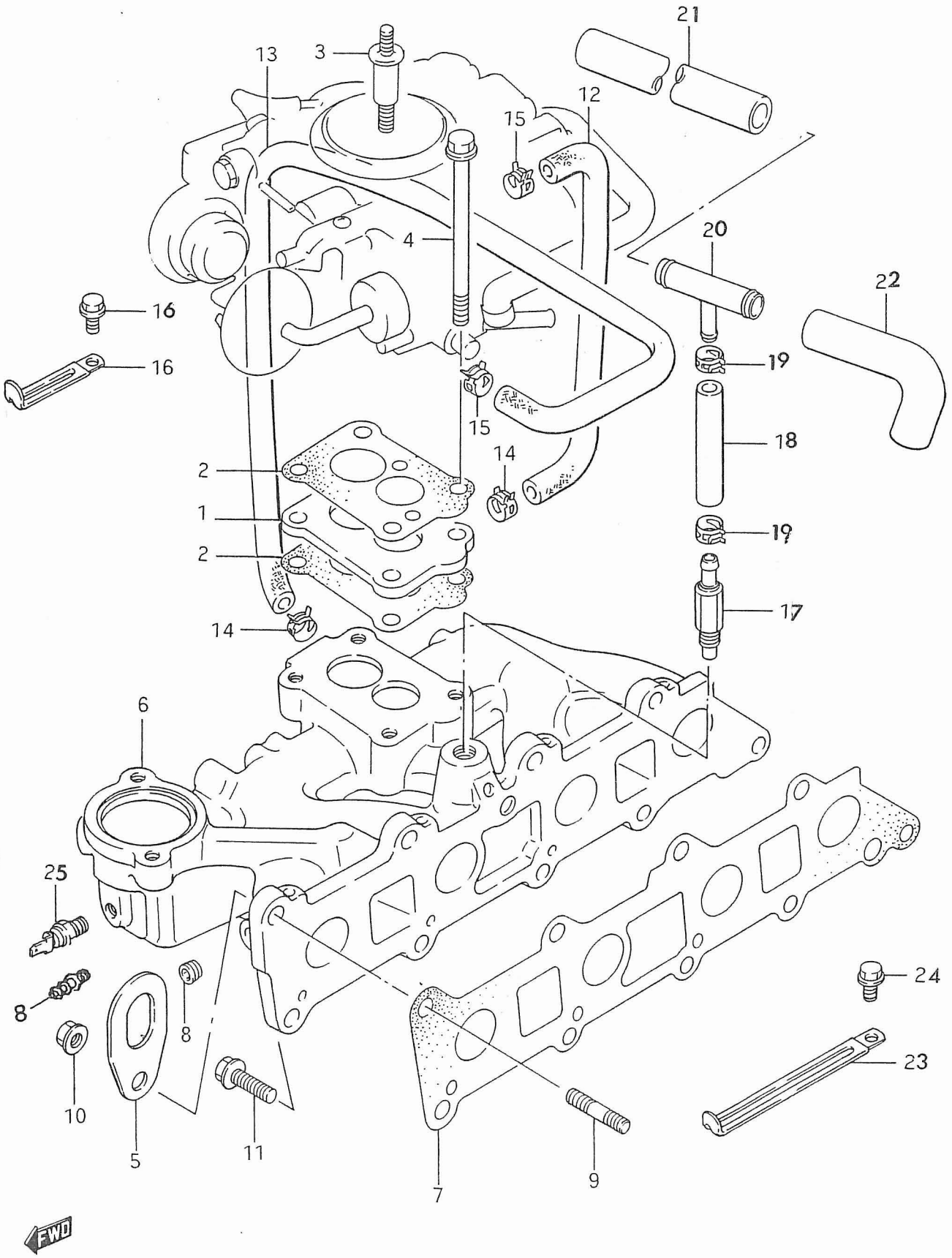
21
3
13
12
15
4
20
22
16
16
19
15
18
14
2
1
19
2
17
14
6
25
24
8
8
23
10
5
11
7
9
FWD

PUBLICACION N:A00523 GRUPO=CATAG SJ-413 SAMURAI SUBGRUPO=1C02COLECTOR ADMISIO
EDICION N: 3 GROUP=CATAG S-413 SAMURAI SUBGROUP=1C02INTAKE MANIFOLD
GROUPE=CATAG SJ-413 SAMURAI SUBGROUPE=1C02COLLECTEUR ADMIS

N.FIG PLATE N.FIG	N.PIEZA PARTNUMBER N.PIECE	CAN QTY OUT	DENOMINACION	DESCRIPTION	DENOMINATION	OBSERVACIONES
1	13129-83000	1	SEPARADOR CARBURADOR	SPACER CARBURETOR	SEPARATEUR CARBURATE	
2	13125-83000	2	JUNTA CARBURADOR	GASKET CARBURETOR	JOINT CARBURATEUR	
	13125-83000-H17	2	JUNTA SIN AMAIANTO	GASKER W/AMIANT	JOINT SAN AMIANTE	
3	13839-83000	1	ESPARRAGO	STUD	GOUJON	
4	09103-08134	4	TORNILLO CARBURADOR	BOLT CARBURETOR	VIS CARBURATEUR	
5	11851-73000	3	ENGANCHE MOTOR	HOOK ENGINE	CROCHET MOTEUR	
6	13110-83040	1	COLECTOR ADMISION	MANIFOLD INTAKE	COLLECTEUR D ADMISSI	
7	13119-82601	1	JUNTA COLECTOR	GASKET	JOINT COLLECTEUR	
8	09246A05001	1	TAPON	PLUG	BOUCHON	
	45001-00000	1	RACOR TUBO VACIO	RACORD PIPE VACUUM	RACOR TUYAU	
9	01421-08253	3	ESPARRAGO	STUD	GOUJON	
10	08310-11083	3	TUERCA	NUT	ECROU	
11	01517-08256	5	TORNILLO	BOLT	VIS	
12	13191-83000	1	TUBO CARBURADOR	HOSE CARBURETOR	TUYAU CARBURATEUR	
13	13192-83000	1	TUBO CARBURADOR	HOSE CARBURETOR	TUYAU CARBURATEUR	
14	09401B13404	2	ABRAZADERA	CLAMP	COLLIER	
15	09401B13404	2	ABRAZADERA	CLAMP	COLLIER	
16	01514-06103	1	TORNILLO FIJ ABRAZA	SCREW FIX CLAMP	VIS FIX COLLIER	
17	18118-80010	1	VALVULA PCV	VALVE PCV	SOUPAPE PVC	
18	11193A80000	1	TUBO VALVULA PCV	HOSE PCV	TUYAU PVC	
19	09401A13404	2	ABRAZADERAS	CLAMP	COLLIERS	
20	09367-14003	1	TE PCV	3 WAY PCV	VALVE 3 VOIES	
21	11191A73001	1	TUBO CALOR	HOSE BREATHER	TUYAU	
22	11192A83000	1	TUBO CALOR	HOSE BREATHER	TUYAU	
23	09404A06402	1	ABRAZADERA	CLAMP	COLLIER	
24	01514-06103	1	TORNILLO	BOLT	VIS	
25	34850A82000	1	TERMO-RESISTENCIA	GAUGE WATER	INIDICATEUR EAU	

FIG. 10

C - 03

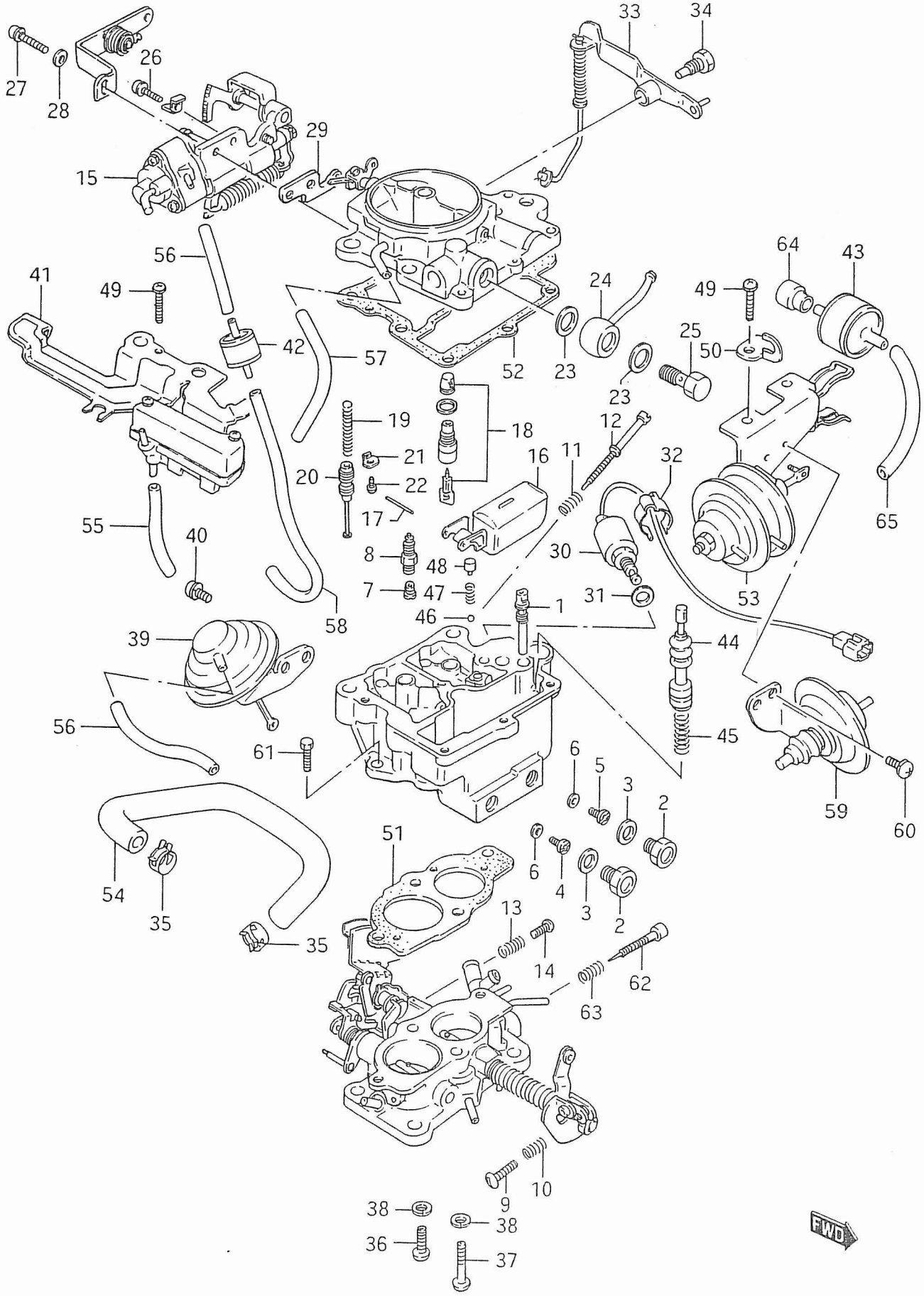
27
28
26
29
15
33
34
56
41
49
42
57
52
23
24
23
25
50
49
64
43
19
18
21
20
22
17
16
11
12
32
55
40
8
48
7
47
30
31
53
65
58
46
1
39
44
56
61
45
6
5
3
2
59
60
51
6
4
3
2
54
35
35
13
14
62
63
10
9
38
38
36
37
FWD

PUBLICACION N:A00523 GRUPO=CATAG SJ-413 SAMURAI SUBGRUPO=1C03CARBURADOR
EDICION N: 3 GROUP=CATAG S-413 SAMURAI SUBGROUP=1C03CARBURETOR ASSY
GROUPE=CATAG SJ-413 SAMURAI SUBGROUPE=1C03CARBURATEUR

N.FIG PLATE N.FIG	N.PIEZA PARTNUMBER N.PIECE	CAN QTY OUT	DENOMINACION	DESCRIPTION	DENOMINATION	OBSERVACIONES
	13200-83010	1	CARBURADOR	CARBURETOR ASSY	ENS CARBURATEUR	
1	13252-83000	1	CHICLE DE BAJA	JET ASSY SLOW	GICLEUR DE PETITES V	
2	13256-82100	2	TAPON	PLUG	BOUCHON	
3	13257-82100	2	JUNTA	GASKET	JOINT	
4	09491-95009	1	CHICLET PRIMER MANDO	JET FIRST MAIN	GICLEUR COMMANDE 1	
5	09491-21021	1	CHICLET SEGUNDO MAND	JET SECOND MAIN	GICLEUR COMMANDE 2	
6	13259-82100	2	JUNTA	GASKET	JOINT	
7	09491-60008	1	CHICLET DE POTENCIA	JET POWER	GICLEUR PUISSANCE	
8	13263-82100	1	VALVULA DE POTENCIA	VALVE ASSY, POWER	SOUPAPE DE POTENCIA	
9	13272-83000	1	TORNILLO DE AJUSTE	SCREW ADJUST	VIS REGLAGE	
10	13282-82100	1	MUELLE	SPRING	RESSORT	
11	13282-82100	1	MUELLE TENSOR	SPRING IDLE SCREW	RESSORT TENDEUR	
12	13296-82100	1	TORNILLO	SCREW THROTTLE ADJUS	VIS	
13	13282-82100	1	MUELLE TENSOR TORNIL	SPRING IDLE ADJUST	RESSORT VIS TENDEUR	
14	13291-82100	1	TORNILLO TENSOR AJUS	SCREW IDLE ADJUST	VIS TENDEUR	
15	13212-83010	1	ADAPTADOR	ADAPTER	ADAPTEUR	
16	13213-82100	1	FLOTADOR	FLOAT	FLOTTEUR	
17	13221-82100	1	PASADOR FLOTADOR	PIN FLOAT LEVER	CLAVETTE FLOTTEUR	
18	13214-82100	1	CONS VALVULA	VALVE ASSY	ENS SOUPPAPE	
19	13219-82040	1	MUELLE PISTON	SPRING POWER PISTON	RESSORT PISTON	
20	13215-82100	1	PISTON	PISTON	PISTON	
21	13216-82100	1	TOPE PISTON	STOPPER POWER PISTON	BUTEE PISTON	
22	13223-82100	1	TORNILLO TOPE	SCREW STOPPER	VIS DE BUTEE	
23	13218-82100	2	JUNTA UNION	GASKET UNION	JOINT UNION	
24	13236-83000	1	ACOPLAMIENTO	NIPPLE UNION	ACCOUPLEMENT	
25	13237-82100	1	TORNILLO UNION	BOLT UNION NIPPLE	VIS UNION	
26	13225-82100	1	TORNILLO	SCREW	VIS	
27	13226-82100	1	TORNILLO	SCREW	VIS	
28	13238-82100	1	ARANDELA	WASHER	RONDELLE	
29	13241-82100	1	PALANCA	LEVER	LEVIER	
30	13260-83000	1	CONJ. VALVULA	VALVE ASSY	ENS SOUPPAPE	
31	13269-82100	1	JUNTA VALVULA	GASKET VALVE	JOINT SOUPAPE	
32	13254-82100	1	ABRAZADERA	CLAMP	COLLIER	
33	13310-82640	1	BRAZO BOMBA	ARM ASSY PUMP	BRAS POMPE	
34	13244-82100	1	TORNILLO BRAZO	SCREW PUMP ARM	VIS BRAS	
35	13324-82100	1	ABRAZADERA	CLAMP	COLLIER	
36	13371-82100	1	TORNILLO	SCREW	VIS	
37	13372-82100	1	TORNILLO	SCREW	VIS	
38	13381-82100	1	ARANDELA	WASHER	RONDELLE	
39	13330-82100	1	CONS DIAFRAGMA	DIAPHAGM ASSY	DIAFRAGME	
40	13373-82100	2	TORNILLO	SCREW	VIS	
41	13320-83011	1	VALVULA	VALVE ASSY	SOUPAPE	
42	18115-83010	1	CONJ SURTIDOR	JET ASSY	ENS GICLEUR	

FIG. 10·1

C - 04

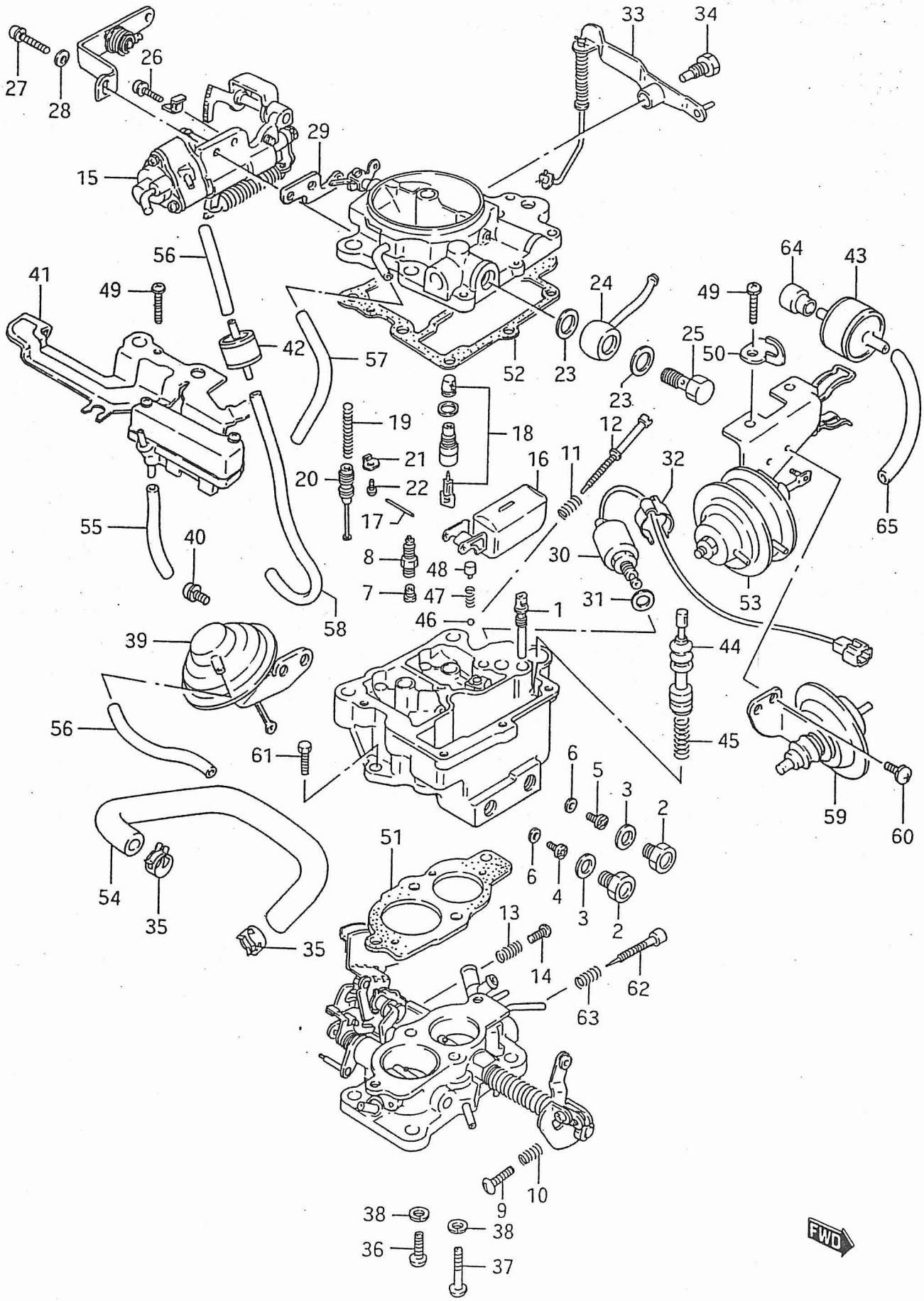
27
28
26
15
29
33
34
56
41
49
42
57
52
23
24
49
64
43
25
50
23
19
18
12
21
16
11
32
20
22
17
55
40
8
48
30
65
7
47
31
53
46
1
58
39
44
56
61
45
6
5
3
2
59
60
51
6
4
3
2
54
35
13
35
14
62
63
10
9
38
38
36
37
FWD

PUBLICACION N:A00523 GRUPO=CATAG SJ-413 SAMURAI SUBGRUPO=1C04DESPIECE CARBURA
EDICION N: 3 GROUP=CATAG S-413 SAMURAI SUBGROUP=1C04CARBURETOR PARTS
GROUPE=CATAG SJ-413 SAMURAI SUBGROUPE=1C04DECAPAGE CARBURA

N.FIG PLATE N.FIG	N.PIEZA PARTNUMBER N.PIECE	CAN QTY OUT	DENOMINACION	DESCRIPTION	DENOMINATION	OBSERVACIONES
43	13319-82100	1	CONJ.VALVULA	VALVE ASSY	ENS SOUPPAPE	
44	13321-82100	1	PISTON BOMBA	PLUNGER ASSY PUMP	PISTON POMPE	
45	13323-82100	1	MUELLE BOMBA	SPRING PUMP	RESSORT POMPE	
46	13322-82100	1	BOLA	BALL	BILLE	
47	13331-83000	1	MUELLE	SPRING	RESSORT	
48	13327-82100	1	FRENO	STOPPER	FREIN	
49	13374-82100	5	TORNILLO	SCREW	VIS	
50	13326-83000	1	FRENO	STOPPER	FREIN	
51	13329-82100	1	JUNTA	GASKET	JOINT	
52	13243-82100	1	JUNTA	GASKET	JOINT	
53	13360-83010	1	DIAFRAGMA	DIAFRAGM	DIAFRAGME	
54	13341-83010	1	TUBO	HOSE	TUYAU	
55	13341-83001	1	TUBO	HOSE	TUYAU	
56	13345-82100	2	TUBO	HOSE	TUYAU	
57	13346-83000	1	TUBO	HOSE	TUYAU	
58	13344-82300	1	TUBO	HOSE	TUYAU	
59	13350-83011	1	UNIDAD DE VACIO	POSITIONER	UNITE DE VIDE	
60	13351-83010	2	TORNILLO	SCREW	VIS	
61	13375-82100	2	TORNILLO	SCREW	VIS	
62	13297-82100	1	TORNILLO AJUSTE	SCREW ADJUST	VIS REGLAJE	
63	13282-82100	1	MUELLE	SPRING	RESSORT	
64	18133-80400	1	FILTRO	FILTER	FILTRE	
65	09343-03087	1	TUBO	HOSE	TUYAU	
66	13200-86810	1	JUEGO JUNTAS	GASKET SET	JEU JOINT	

FIG. 11

C - 05

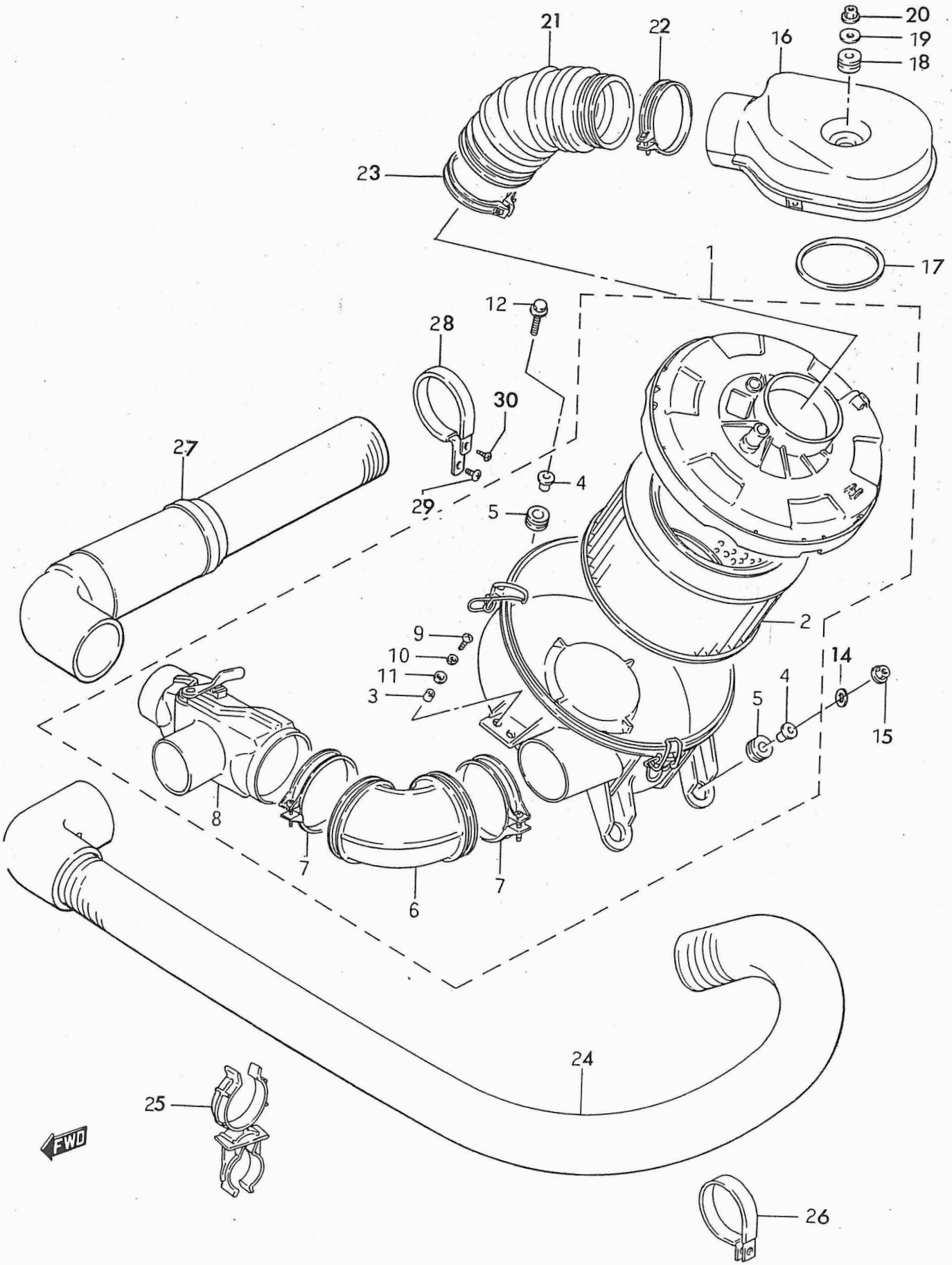
20
19
18
21
22
16
23
1
17
12
28
30
27
4
29
5
2
9
10
11
3
14
4
5
15
8
7
6
7
24
25
FWD
26

PUBLICACION N:A00523 GRUPO=CATAG SJ-413 SAMURAI SUBGRUPO=1C05FILTRO DE AIRE
EDICION N: 3 GROUP=CATAG S-413 SAMURAI SUBGROUP=1C05AIR CLEANER
GROUPE=CATAG SJ-413 SAMURAI SUBGROUPE=1C05FILTRE A AIRE

N.FIG PLATE N.FIG	N.PIEZA PARTNUMBER N.PIECE	CAN QTY OUT	DENOMINACION	DESCRIPTION	DENOMINATION	OBSERVACIONES
1	13700A83001	1	CONJ FILTRO AIRE	CLEANER ASSY AIR	ENS FILTRE AIRE	
2	13780A83000	1	ELEMENTO FILTRO	ELEMENT FILTER	ELEMENT FILTRE	
3	13712-83000	2	CASQUILLO	SPACER	BAGUE	
4	13812-83001	3	CASQUILLO	SPACER	BAGUE	
5	13700B83301	3	ARANDELA FIJ FILTRO	WASHER FIX FILTRE	RONDELLE FIX FILTRE	
6	13731-83000	1	CODO	JOINT	CODE	
7	09402-70207	2	ABRAZADERA	CLAMP	COLLER	
8	13740-83000	1	VALVULA AIRE CALIENT	VALVE WARM AIR	VALVE	
9	02112-06124	2	TORNILLO	SCREW	VIS	
10	08321-21064	2	ARANDELA	WASHER	RONDELLE	
11	08322-21064	2	ARANDELA	WASHER	RONDELLE	
12	01517-06203	1	TORNILLO	BOLT	VIS	
13	09160-06027	1	ARANDELA	WASHER	RONDELLE	
14	09160-06077	2	ARANDELA	WASHER	RONDELLE	
15	08316A16063	2	TUERCA	NUT	ECROU	
16	13830-83001	1	CAJA ADMISION AIRE	CASE AIR INTAKE	BOITE ADMISSION AIR	
	13830A83001	1	CAJA ADMIS.AIRE	CASE AIR INTAK	BOITE ADMISS.AIR	U.K.
17	13885-83000	1	RETEN	SEAL	ARRETOIR	
18	09169-06057	1	CASQUILLO	SPACER	BAGUE	
19	09320-09034	1	ARANDELA	WASHER	RONDELLE	
20	08316A16063	1	TUERCA	NUT	ECROU	
21	13881A83001	1	MANGUITO	HOSE	TUYAU FLEXIBLE	
22	08004-00000	1	ABRAZADERA	CLAMP	COLLIER	
23	08006-00000	1	ABRAZADERA	CLAMP	COLLIER	
24	13840-83000	1	MANGUITO AIRE CALIEN	HOSE WARM AIR	TUYAU AIR CHAUD	
25	13860-83000	1	ABRAZADERA	CLAMP	COLLIER	
26	09403A48401	1	ABRAZADERA	CLAMP	COLLIER	
27	13870-83000	1	MANGUITO AIRE FRIO	HOSE COOL AIR	TUYAU AIR	
28	13896-83000	1	ABRAZADERA	CLAMP	COLLIER	
29	02142-06123	1	TORNILLO	SCREW	VIS	
30	03141-05106	1	TORNILLO	SCREW	VIS	

FIG.12

C - 06

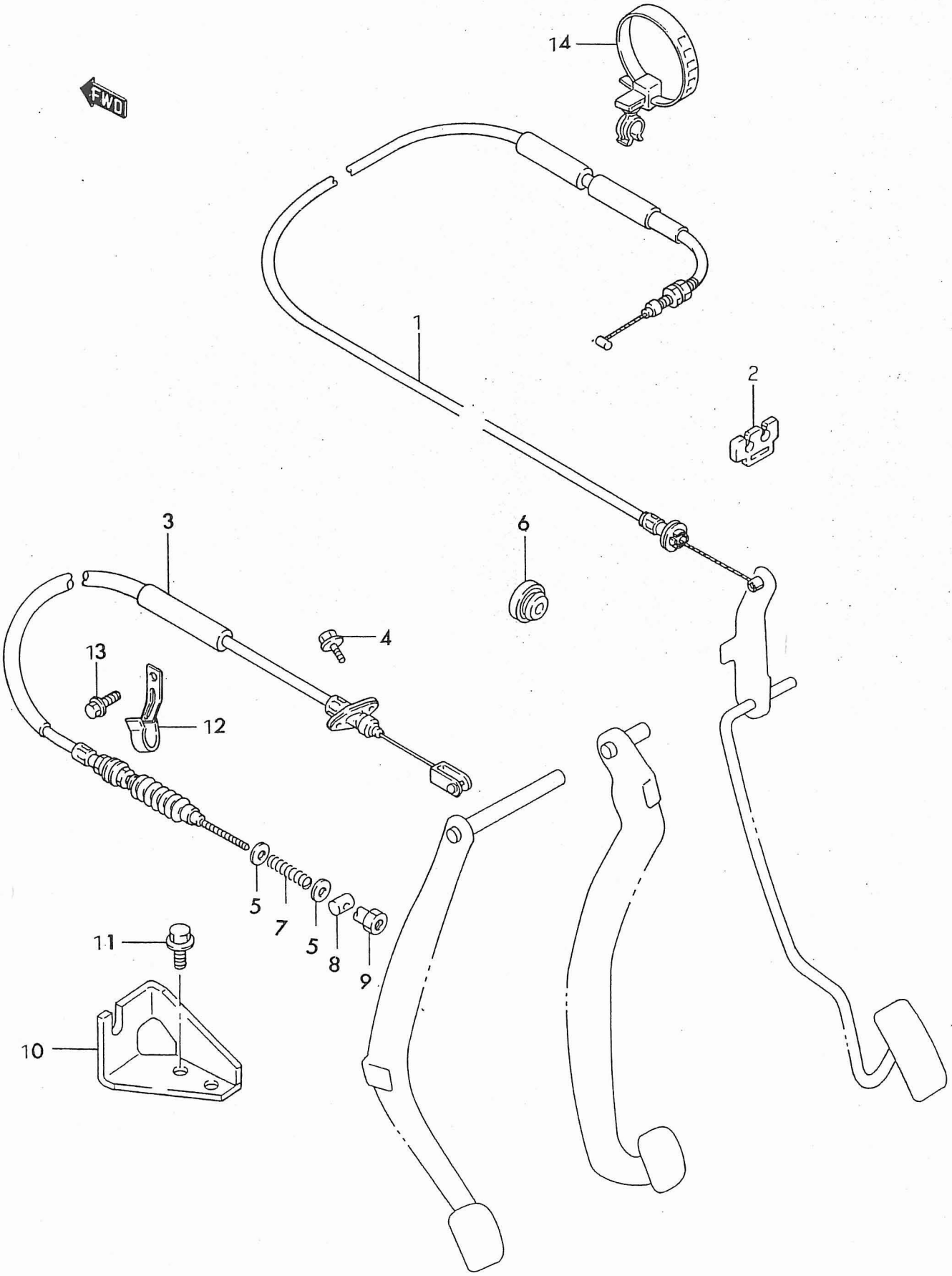

PUBLICACION N:A00523 GRUPO=CATAG SJ-413 SAMURAI SUBGRUPO=1C06CABLES DE MANDO
EDICION N: 3 GROUP=CATAG S-413 SAMURAI SUBGROUP=1C06CONTROL CABLES
GROUPE=CATAG SJ-413 SAMURAI SUBGROUPE=1C06CABLES COMMANDE

N.FIG PLATE N.FIG	N.PIEZA PARTNUMBER N.PIECE	CAN QTY OUT	DENOMINACION	DESCRIPTION	DENOMINATION	OBSERVACIONES
1	15910A83000	1	CABLE ACELERADOR	CABLE ASSY ACCLE.	CABLE ACCELERAT.	U.K.
	15910A83010	1	CABLE ACELERADOR	CABLE ASSY ACCLE	CABLE ACCELERATEUR	
2	15991-83000	1	ABRAZADERA	CLAMP	COLLIER	
3	23710A83012	1	CABLE EMBRAGUE	CABLE ASSY CLUTCH	CABLE EMBRAYAGE	U.K.
	23710A83023	1	CABLE DE EMBRAGE	CABLE ASSY CLUTCH	CABLE EMBRAYAGE	
4	01514-06163	2	TORNILLO	BOLT	VIS	
5	08322-21063	2	ARANDELA	WASHER	RONDELLE	
6	15939-83000	1	TAPON	PLUG	BOUCHON	
7	09440-08026	1	MUELLE	EPRIWG	RESSORT	
8	09209-13007	1	EJE	PIN	AXE	
9	09150-06010	1	TUERCA	NUT	ECROU	
10	23911-83001	1	SOPORTE CABLE EMBRAG	BRACKET CLUTCH CABLE	SUPPORT CABLE EMBRAY	
11	01517-10203	2	TORNILLO	BOLT	VIS	
12	09403A12310	1	BRIDA	CLAMP	COLLIER	U.K.
	09404A06415	1	ABRAZADERA	CLAMP	COLLIER	
13	01514-06103	1	TORNILLO	BOLT	VIS	
14	00009-00000	1	BRIDA	CLAMP	BRIDE DE SERRAGE	

FIG.13

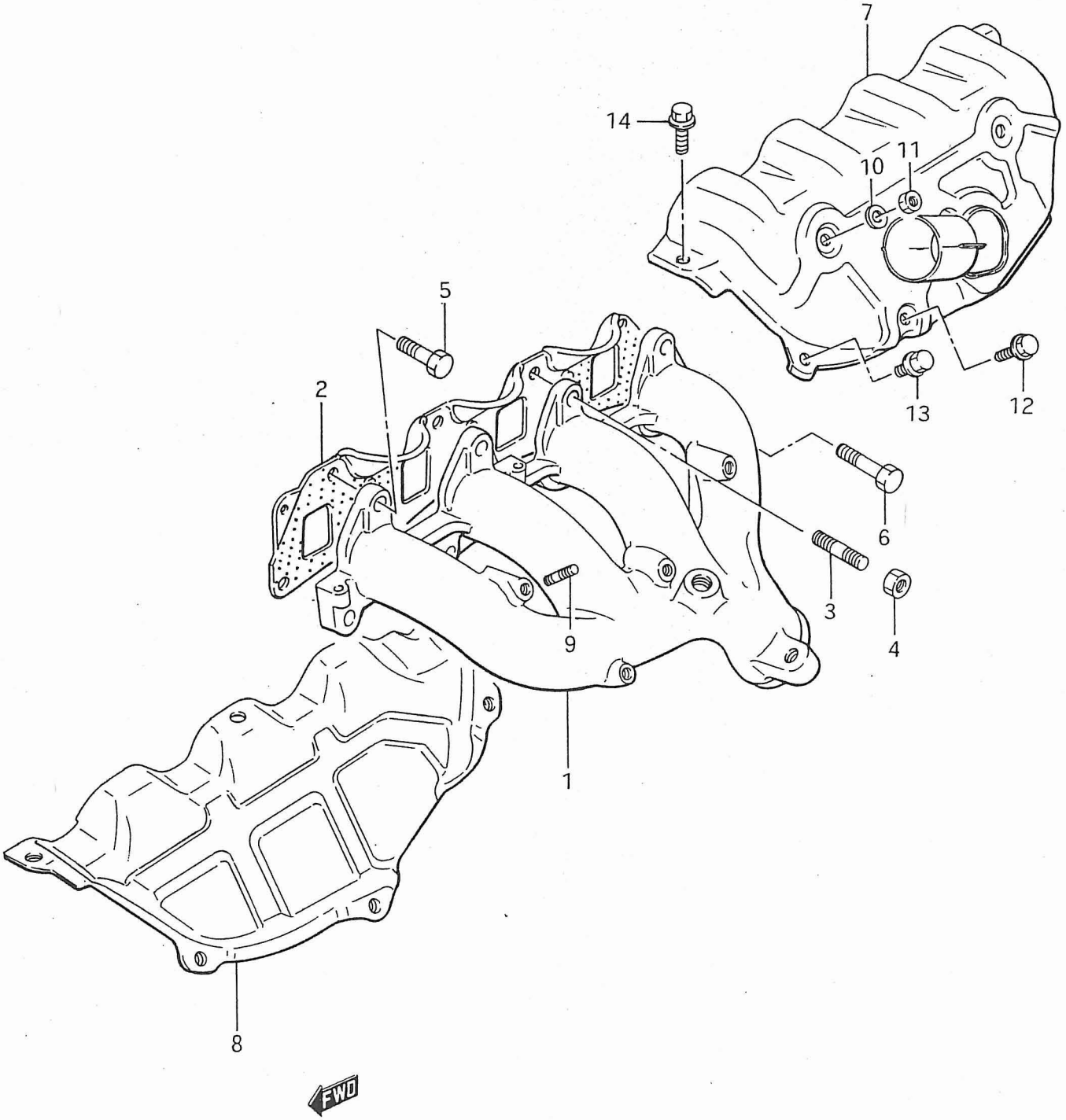

PUBLICACION N:A00523 GRUPO=CATAG SJ-413 SAMURAI SUBGRUPO=1C07COLECTOR ESCAPE
EDICION N: 3 GROUP=CATAG S-413 SAMURAI SUBGROUP=1C07MANIFOLD EXHAUST
GROUPE=CATAG SJ-413 SAMURAI SUBGROUPE=1C07COLLECT.ECHAPP.

N.FIG PLATE N.FIG	N.PIEZA PARTNUMBER N.PIECE	CAN QTY OUT	DENOMINACION	DESCRIPTION	DENOMINATION	OBSERVACIONES
1	14111-83003	1	COLECTOR DE ESCAPE	MANIFOLD ESHAUST	COLLECTEUR D'ECHAPP.	
2	14140-83000	1	JUNTA COLECTOR	GASKET MANIFOLD	JOINT COLLECTEUR	
3	01411-08253	2	ESPARRAGO	STUD BOLT	GOUJON	
4	08310-11083	2	TUERCA	NUT	ECROU	
5	01107-08253	4	TORNILLO	BOLT	VIS	
	01107-08303	1	TORNILLO	BOLT	VIS	
6	01107-08356	1	TORNILLO	BOLT	VIS	
7	14120-83003	1	TAPA SUP COLECTOR	COVE MANIFOLD UPPER	COUVERCLE SUP COLLEC	
8	14130-83002	1	TAPA INF COLECTOR	COVE MANIFOLD LOWER	COUVERCLE INF COLLEC	
9	01411-06123	2	ESPARRAGO	SUTUP BOLT	GOUJON	
10	08322-21063	2	ARANDELA	WASHER	RONDELLE	
11	08310-11063	2	TUERCA	NUT	ECROU	
12	01517-06103	2	TORNILLO	BOLT	VIS	
13	01514-06103	3	TORNILLO	BOLT	VIS	
14	01517-06303	3	TORNILLO	BOLT	VIS	

FIG.14

C - 08

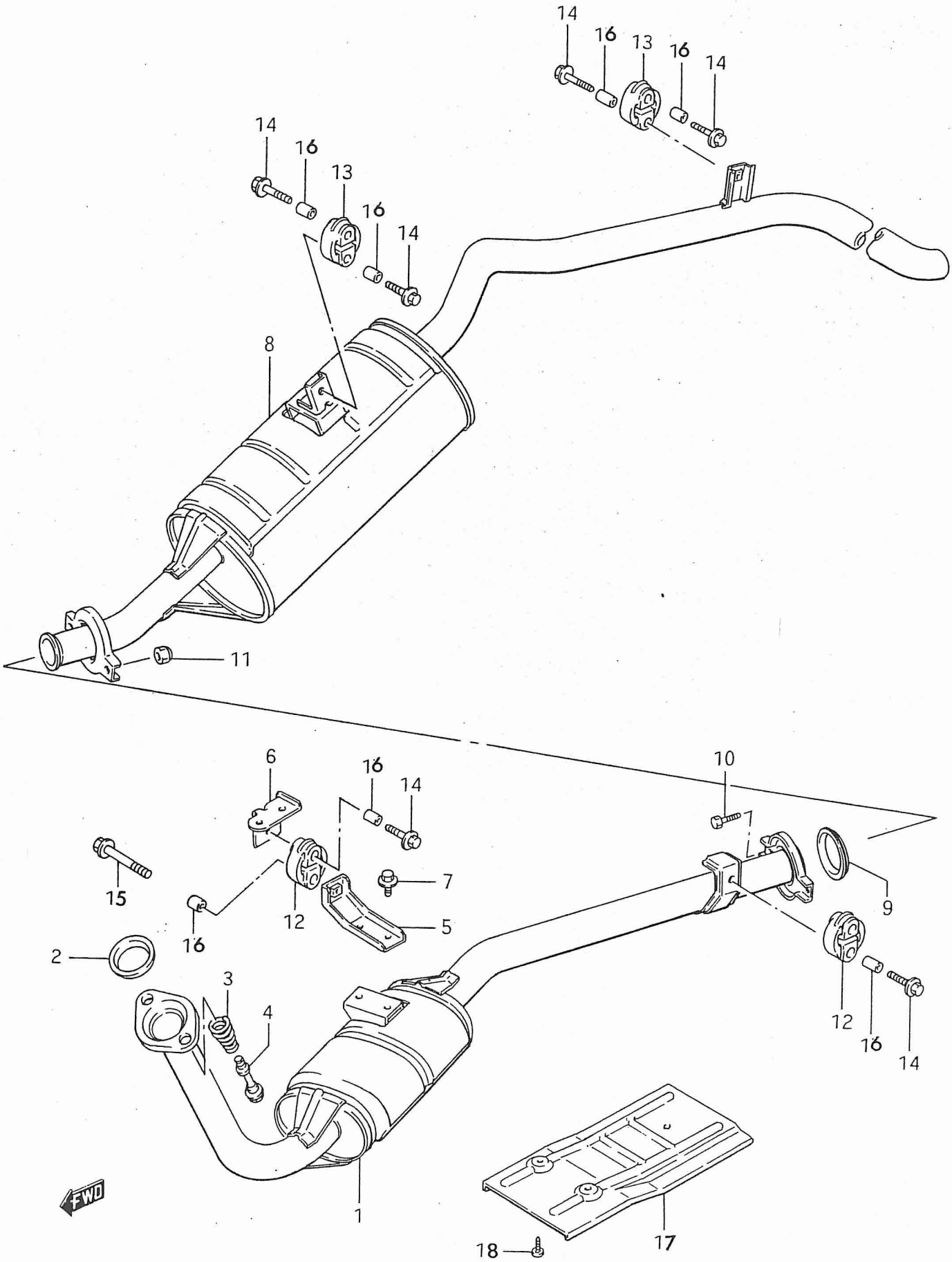
14
16
13
16
14
14
16
13
16
14
8
11
6
16
14
10
15
7
9
16
12
5
2
3
4
12
16
14
1
17
18
FWD

PUBLICACION N:A00523 GRUPO=CATAG SJ-413 SAMURAI SUBGRUPO=1C08TUBERIAS ESCAPE
EDICION N: 3 GROUP=CATAG S-413 SAMURAI SUBGROUP=1C08PIPES EXHAUST
GROUPE=CATAG SJ-413 SAMURAI SUBGROUPE=1C08TUYAUX/ECHAPPEM.

N.FIG PLATE N.FIG	N.PIEZA PARTNUMBER N.PIECE	CAN QTY OUT	DENOMINACION	DESCRIPTION	DENOMINATION	OBSERVACIONES
1	14150A83002	1	TUBO ESCAPE CENTRAL	PIPE EXHAUST CENTER	TUYAU D ECHAPPEMENT	
2	14183-82601	1	ANILLO TUBO ESCAPE	SEAL RING	ANNEAU TUYAU	
3	14492-82600	2	MUELLE	SPRING	RESSORT	
4	09119-10041	2	TORNILLO	BOLT	VIS	
5	14284-83002	1	SOPORTE TUBO ESCAPE	BRACKET EXHAUST PIPE	SUPPORT TUYAU ECHAPP	
6	14285-83001	1	SOPORTE TUBO ESCAPE	BRACKET EXHAUST PIPE	SUPPORT TUYAU ECHAPP	
7	01517-08123	2	TORNILLO	BOLT	VIS	
8	14300A83011	1	SILENCIOSO	MUFFLER	SILENCIEUX	
	14300A83411	1	SILENCIOSO	MUFFLER	SILENCIEUX	LONG BODY
9	14699-83000	1	JUNTA SILENCIOSO	GASKET MUFFLER	JOINT SILENCIEUX	
10	01107-08256	2	TORNILLO	BOLT	VIS	
11	09159A08022	2	TUERCA	NUT	ECROU	
12	14281-78010	2	SOPORTE TUBO CENTRAL	MOUNTING CENTER PIPE	SUPPORT TUBE CENTRAL	
13	14281-79010	2	SOPORTE SILENCIOSO	MOUNTING NUFFLER	SUPPORT SILENCIEUX	
14	01514-08353	7	TORNILLO	BOLT	VIS	
15	01517-08353	1	TORNILLO	BOLT	VIS	
16	09180-08095	8	CASQUILLO	SPACER	BAGUE	
17	14231-80010	1	PANEL PROTECTOR	PANEL HEAT PROTECTOR	PANNEAU PROTECTEUR	
18	03141-06123	3	TORNILLO	SCREW	VIS	

FIG. 15

C - 09

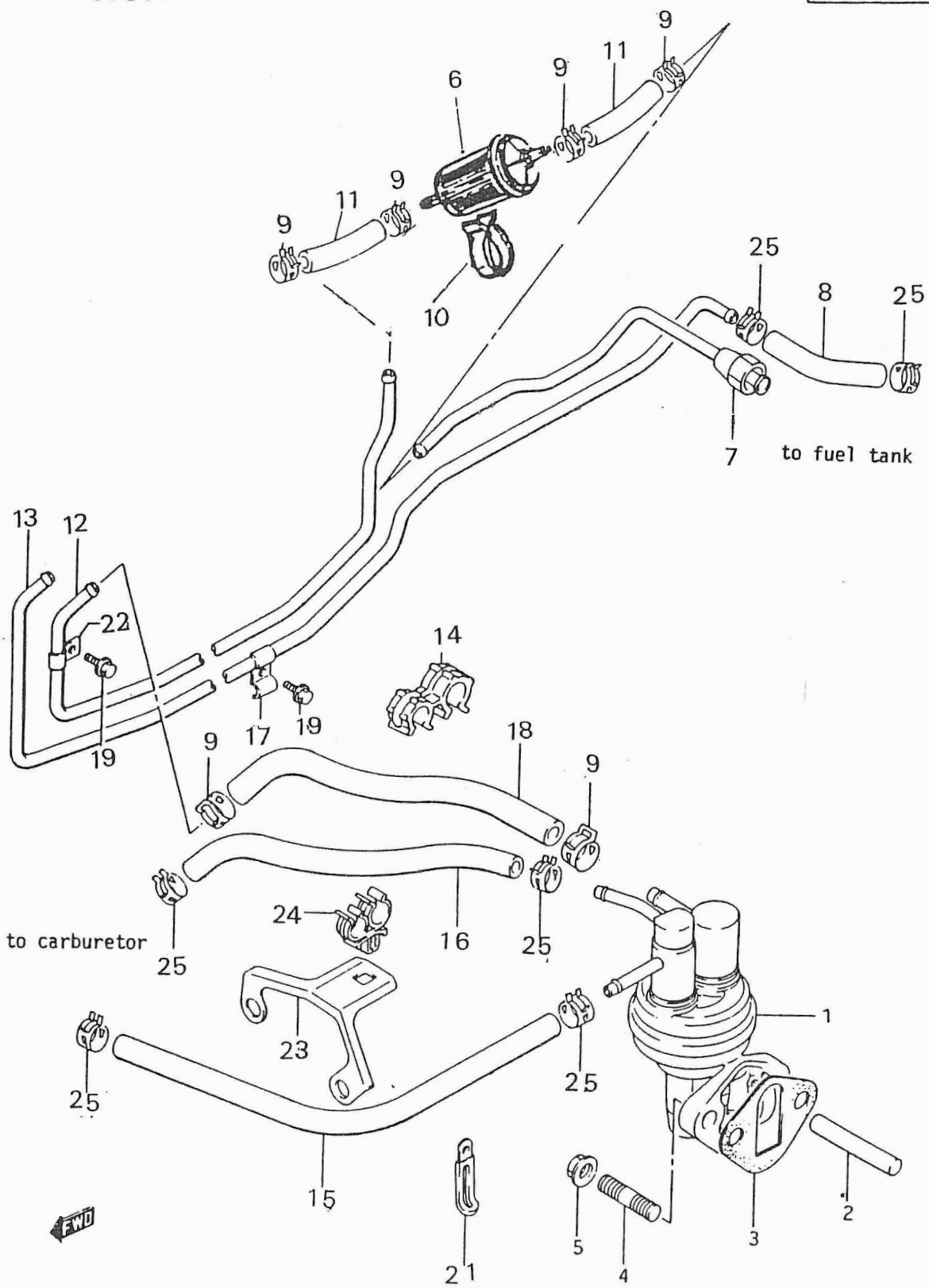
9
11
9
6
9
11
9
25
8
25
10
7
to fuel tank
13
12
22
14
19
17
19
9
18
9
24
16
25
to carburetor
25
23
1
25
25
15
21
5
4
3
2
FWD

PUBLICACION N:A00523 GRUPO=CATAG SJ-413 SAMURAI SUBGRUPO=1C09BOMBA COMBUSTIBL
EDICION N: 3 GROUP=CATAG S-413 SAMURAI SUBGROUP=1C09FUEL PUMP
GROUPE=CATAG SJ-413 SAMURAI SUBGROUPE=1C09POMPE-CARBURANT

N.FIG PLATE N.FIG	N.PIEZA PARTNUMBER N.PIECE	CAN QTY OUT	DENOMINACION	DESCRIPTION	DENOMINATION	OBSERVACIONES
1	15100A83000	1	BOMBA COMBUSTIBLE	PUMP ASSY	ENS POMPE ALIMENT	
2	15315-82000	1	VARILLA EMPUJADORA	LOD FUEL PUMP	TIGE POUSSOIR	
3	15319-73001	1	JUNTA BOMBA	GASKET	JOINT	
4	01421-08253	2	ESPARRAGO	STUD	GOUJON	
5	08310-11083	2	TUERCA	NUT	ECROU	
6	15410A63401	1	FILTRO	FUEL FILTER	FILTRE	
7	15810A80010	1	TUBO SALIDA DEPOSITO	PIPE TANK TD FILTER	TUBE SORTIE RESERVOI	
	15810A80311	1	TUBO SALIDA	PIPE TANK TO FILTER	TUBE SORTIE	LONG BODY
8	09343A04036	1	TUBO	PIPE	TUYAU	L.125
9	00010-00000	10	ABRAZADERA	CLAMP	COLLIER	
10	09403A45301	1	ABRAZADERA	CLAMP	COLLIER	
11	09343B07069	1	TUBO	PIPE	TUYAU	H.53094
	09343C07108	1	TUBO L'290	PIPE L.290	TUYAU L.290	H53094
	09343D07108	2	TUBO L. 185	PIPE L. 185	TUYAU L.185	D63628
12	15821A83010	1	TUBO BOMBA A CARBURA	PIPE PUMP TO CARBUR	TUYAU POMPE A CARBUR	
13	15861-83010	1	TUBO RETORNO	PIPE RETORN	TUYAU RETORNEUR	
	15861-83510	1	TUBO REOTRNO	PIPE	TUYAU	LONG BODY
14	09408A00083	2	ABRAZADERA TUBO	CLAMP PIPE	COLLIER TUYAU	
15	09343A04047	1	TUBO RETORNO L.480	PIPE RETURN L.480	TUYAU RETORNE L.480	
16	15830A83000	1	TUBO BOMBA-CARBURADO	PIPE PUMP CARBURETO	TUYAU POMPE CARBURET	
17	15819-78000	7	ABRAZADERA	CLIP	ETRIER	
18	09343C07044	1	TUBO BOMBA-FILTRO	PIPE PUMP -FILTER	TUYAU POMPE FILTRE	L.165
	15840A83002	1	TUBO BOMBA A FILTRO	PIPE PUMP TO FILTER	TUYAU POMPE A FILTRE	D63628
19	00011-00000	11	TORNILLO	SCREW	VIS	
20	09404A08405	1	ABRAZADERA	CLAMP	COLLIER	
21	24759A78130	1	ABRAZADERA	CLAMP	COLLIER	
22	09403-08309	4	ABRAZADERA	CLAMP	COLLIER	
23	15881A83002	1	SOPORTE	BRACKET	SUPPORT	
24	09408-00090	1	CLIP TUBOS	CLIP PIPE	CLIP TUYAU	D63628
25	09401B11402	4	ABRZADERA	CLAMP	COLLIER	

FIG. 16

B – 10

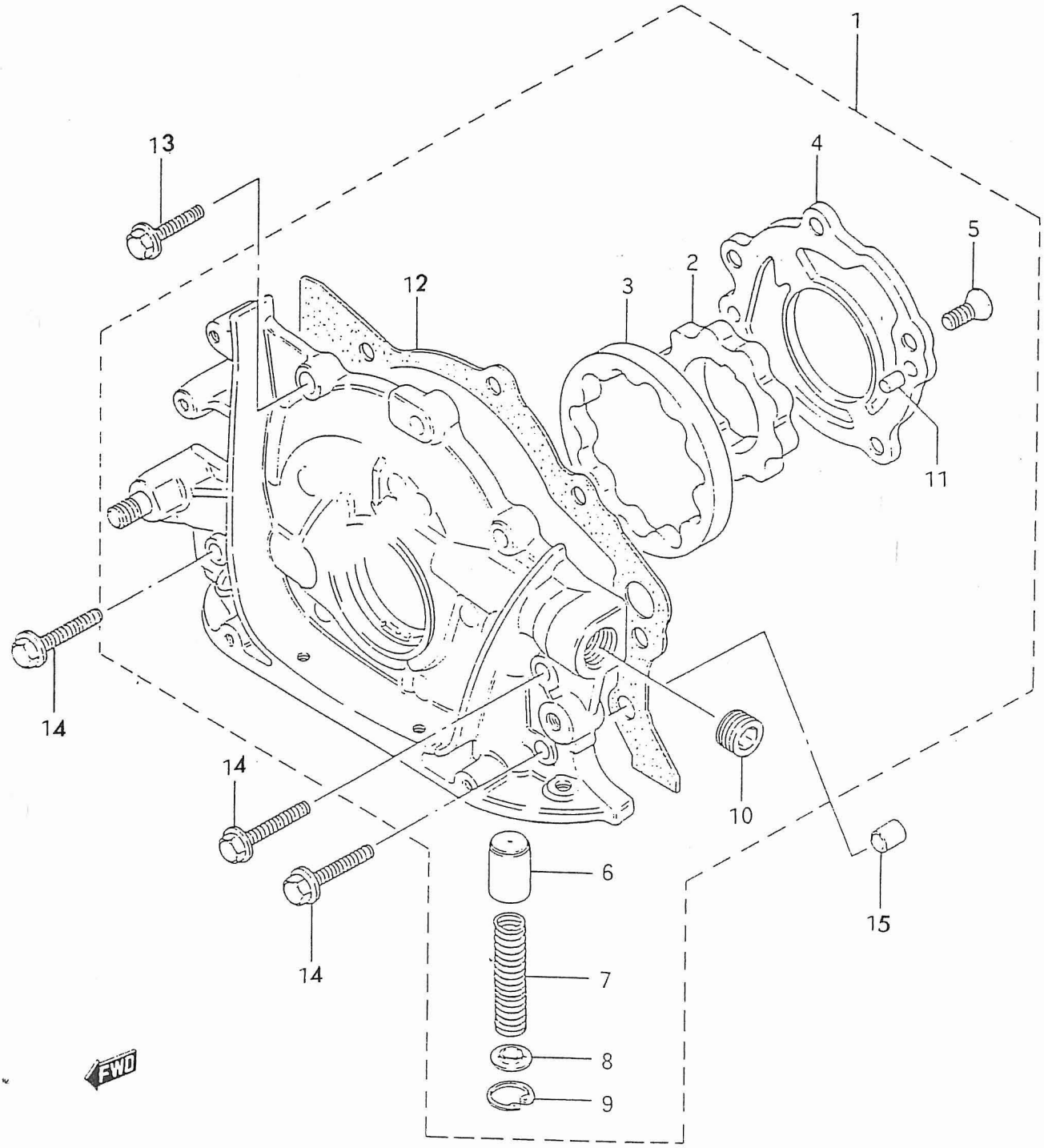

PUBLICACION N:A00523 GRUPO=CATAG SJ-413 SAMURAI SUBGRUPO=1B10BOMBA DE ACEITE
EDICION N: 3 GROUP=CATAG S-413 SAMURAI SUBGROUP=1B10OIL PUM
GROUPE=CATAG SJ-413 SAMURAI SUBGROUPE=1B10POMPE A HUILE

N.FIG PLATE N.FIG	N.PIEZA PARTNUMBER N.PIECE	CAN QTY OUT	DENOMINACION	DESCRIPTION	DENOMINATION	OBSERVACIONES
1	16100-82821	1	CONJ BOMBA ACEITE	PUMP OIL ASSY	ENS POMPE HUILE	
2	16131-82600	1	ENGRANAJE INTERIOR	GEAR INNER	ENGRENAGE INTER	
3	16132-82600	1	ENGRANAJE EXTERIOR	GEAR OUTER	ENGRENAGE EXTER	
4	16161-82600	1	PLACA ENGRANAJE	PLAE GEAR	PLAQUE ENGRENAGE	
5	02122-06148	5	TORNILLO	SCREW	VIS	
6	16151-78100	1	VALVULA DE DESCARGA	VALVE RELIEF	SOUPAPE DECHARGE	
7	16152-78100	1	MUELLE	SPRING	RESSORT	
8	16153-78100	1	RETENEDOR MUELLE	RETAINER SPRING	RETIENT RESSORT	
9	08331-41159	1	CIRCLIP	CIRCLIP	CIRCLIP	
10	16171-78100	2	TAPON	PLUG	BOUCHON	
11	16173-78100	2	FIJA	PIN	FIXE	
12	16119-82000	1	JUNTA BOMBA	GASKET OIL PUMP	JOINT POMPE	
13	01517-06256	4	TORNILLO	BOLT	VIS	
14	01517-06353	3	TORNILLO	BOLT	VIS	
15	04211A09109	2	FIJA	PIN	FIXE	

FIG. 17

D - 02

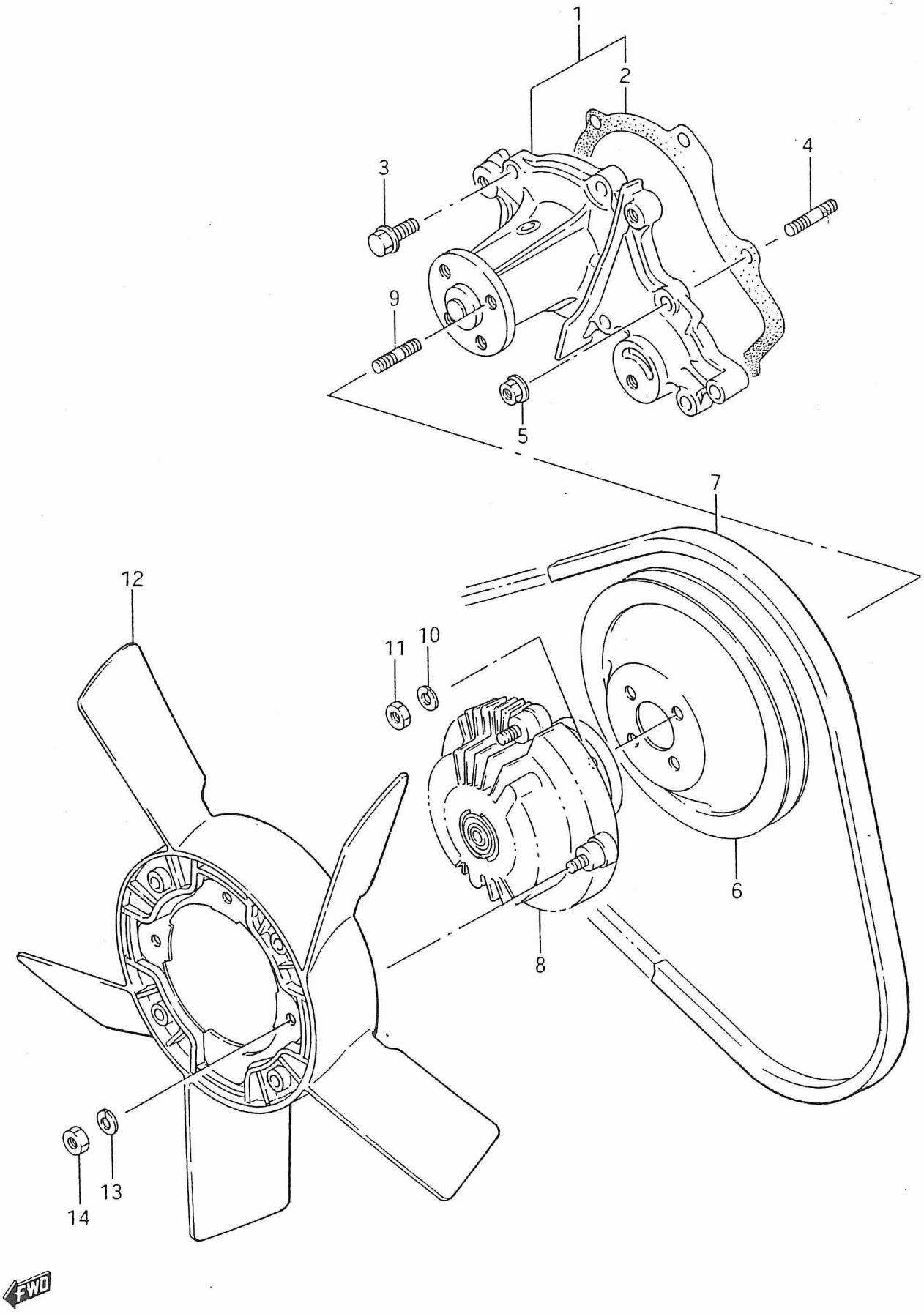

PUBLICACION N:A00523 GRUPO=CATAG SJ-413 SAMURAI SUBGRUPO=1D02BOMBA AGUA VENTI
EDICION N: 3 GROUP=CATAG S-413 SAMURAI SUBGROUP=1D02WATER PUMP
GROUPE=CATAG SJ-413 SAMURAI SUBGROUPE=1D02POMPE A EAU

N.FIG PLATE N.FIG	N.PIEZA PARTNUMBER N.PIECE	CAN QTY OUT	DENOMINACION	DESCRIPTION	DENOMINATION	OBSERVACIONES
1	17400-83810	1	CONJ BOMBA DE AGUA	PUMP ASSY WATER	ENS POMPE A EAU	
2	17431-82000	1	JUNTA BOMBA AGUA	GASKET WATER PUMP	JOINT POMPE	
3	09103-06066	4	TORNILLO	BOLT	VIS	
4	01421-06203	2	ESPARRAGO	STUD BOLT	GOUJON	
5	08316A16063	2	TUERCA	NUT	ECROU	
6	17511-82000	1	POLEA BOMBA	PULLEY WATER PUMP	POLIE POMPE	
7	17521B82010	1	CORREA	BELT	COURROIE	
8	17120-83000	1	EMBRAGUE VENTILADOR	CLUTCH FAN	EMBRAYAGE VENTILATEU	
9	01411-06206	4	ESPARRAGO	STUD	GOUJON	
10	08321A31063	4	ARANDELA	WASHER	RONDELLE	
11	08310-11063	4	TUERCA	NUT	ECROU	
12	17110-83000	1	VENTILADOR	FAN ENGINE COOLING	VENTILATEUR	
13	08321A31063	4	ARANDELA	WASHER	RONDELLE	
14	08310-11063	4	TUERCA	NUT	ECROU	

FIG. 18

D - 03

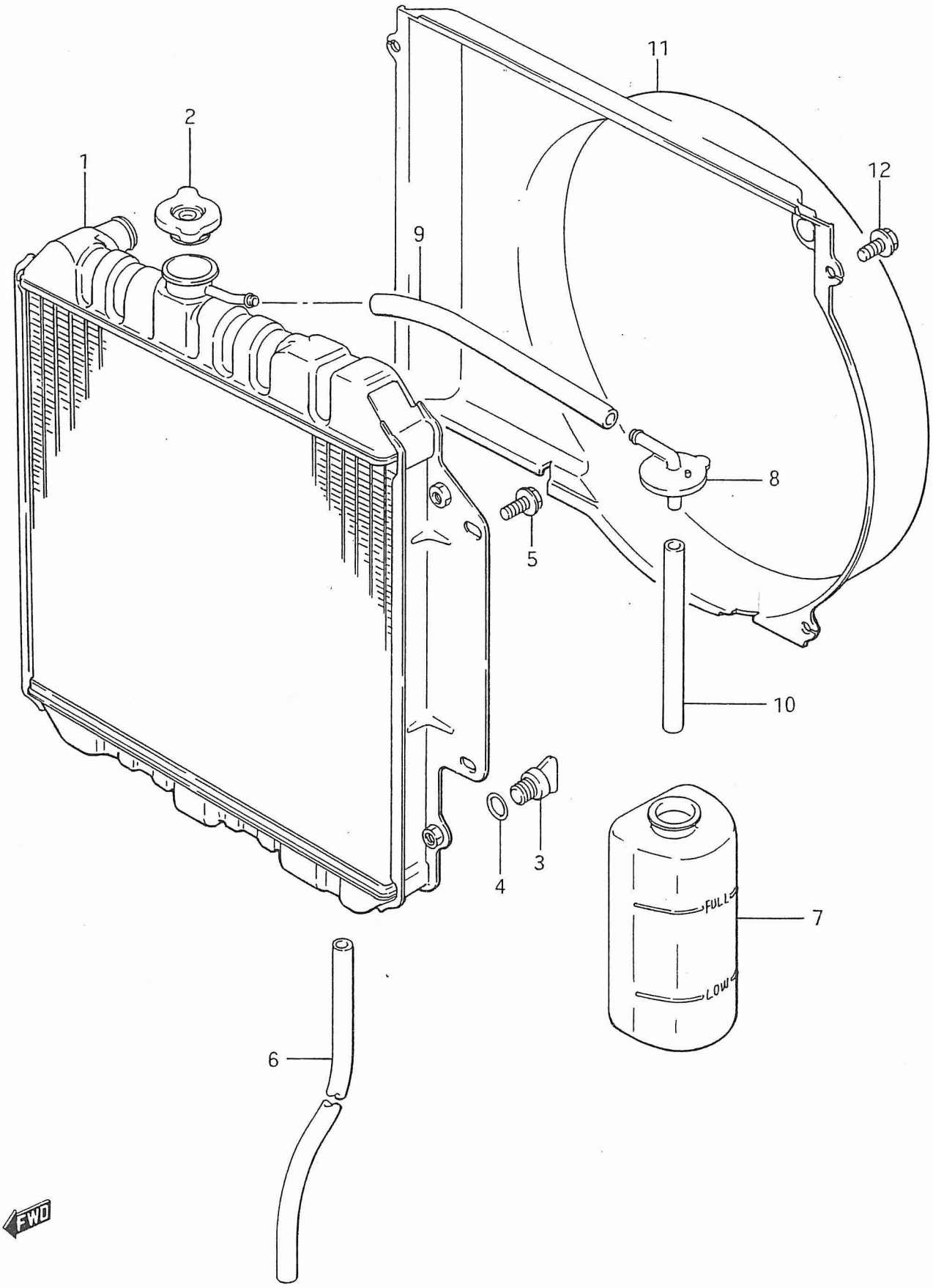

PUBLICACION N:A00523 GRUPO=CATAG SJ-413 SAMURAI SUBGRUPO=1D03RADIADOR
EDICION N: 3 GROUP=CATAG S-413 SAMURAI SUBGROUP=1D03RADIATOR ASSY
GROUPE=CATAG SJ-413 SAMURAI SUBGROUPE=1D03RADIATEUR

N.FIG PLATE N.FIG	N.PIEZA PARTNUMBER N.PIECE	CAN QTY OUT	DENOMINACION	DESCRIPTION	DENOMINATION	OBSERVACIONES
1	17700C83001	1	CONJ. RADIADOR	RADIATOR ASSY	ENS.RADIATEUR	
2	00000A00013	1	TAPON RADIADOR	CAP RADIATOR	BOUCHON RADIATEUR	
3	00000A00014	1	TAPON VACIADO	PLUG DRAIN	BOUCHON VIDANGE	
4	00000A00015	1	ANILLO TORICO	O RING	ANNEAU TORIQUE	
5	01514-06103	4	TORNILLO	BOLT	VIS	
	09409-07306	4	CLIP	CLIP	CLIP	
6	09344-07012	1	TUBO VACIADO	HOSE DRAIN	TUYAU	
7	17930-78100	1	DEPOSITO AGUA	TANK WATER	RESERVOIR	
8	17932-78100	1	TAPON	CAP	BOUCHON	
9	09343-07104	1	TUBO	HOSE	TUYAU	
10	09343-07086	1	TUBO	HOSE	TUYAU	
11	17761A83000	1	CAMPANA RADIADOR	RADIATOR COVER	COUVERCLE RADIATEUR	
12	01514-06103	4	TORNILLO	BOLT	VIS	

FIG. 19

D - 04

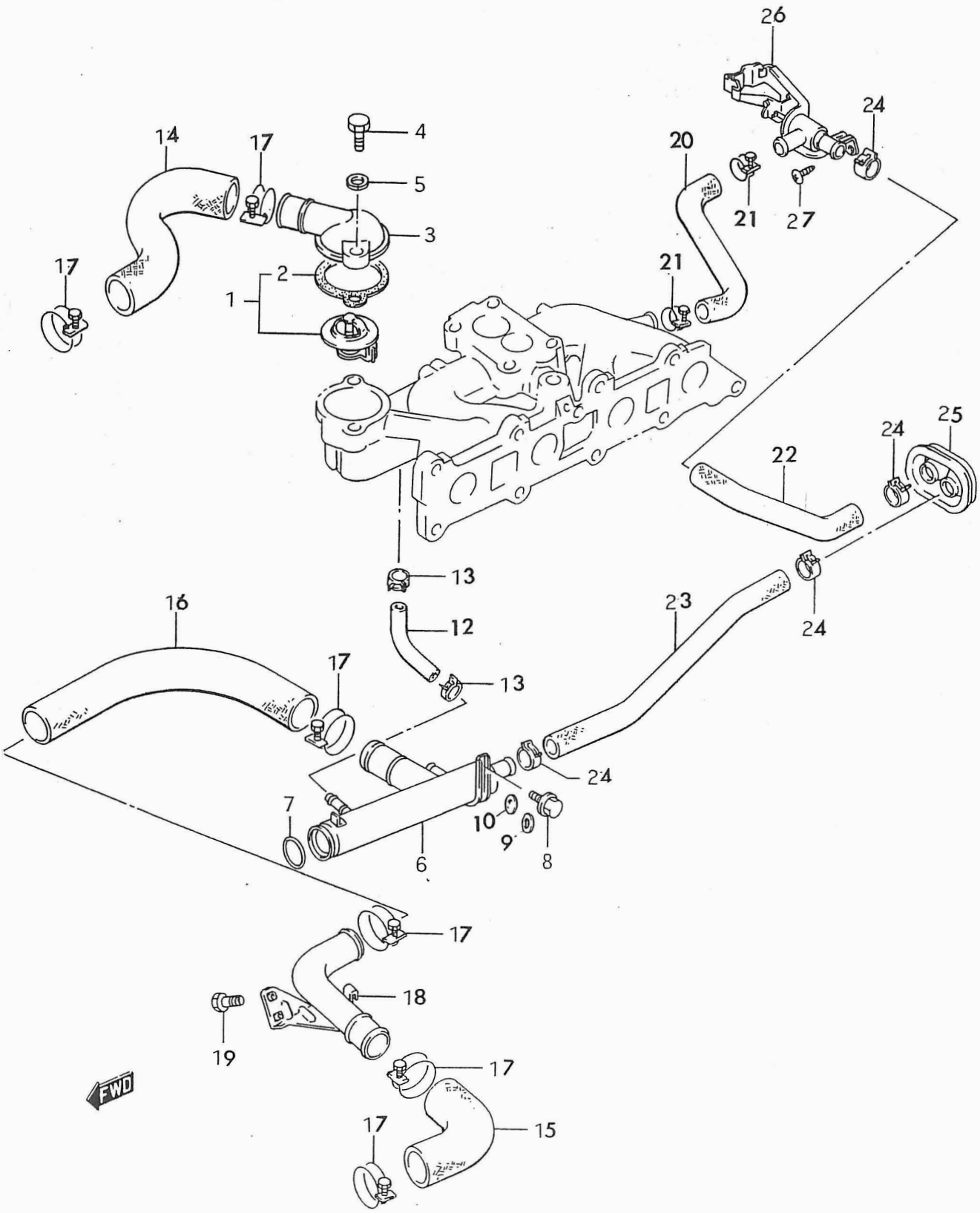
26
24
4
14
17
20
5
21
27
3
17
2
21
1
24
25
22
13
16
23
12
24
17
13
24
7
10
9
8
6
17
18
19
17
FWD
17
15

PUBLICACION N:A00523 GRUPO=CATAG SJ-413 SAMURAI SUBGRUPO=1D04TERMOSTATO
EDICION N: 3 GROUP=CATAG S-413 SAMURAI SUBGROUP=1D04THERMOSTAT
GROUPE=CATAG SJ-413 SAMURAI SUBGROUPE=1D04THERMOSTAT

N.FIG PLATE N.FIG	N.PIEZA PARTNUMBER N.PIECE	CAN QTY OUT	DENOMINACION	DESCRIPTION	DENOMINATION	OBSERVACIONES
1	17570A74001	1	TERMOSTATO	THERMOSTAT	THERMOSTAT	
2	17569A80000	1	JUNTA	GASKET CAP	JOINT	
3	17561-73000	1	ALOJAMIENTO TERMOST	CAP THERMOSTAT	COUVERCLE THERMOSTAT	
4	01104-08303	2	TORNILLO	BOLT	VIS	
5	08321B31086	2	ARANDELA	WASHER	RONDELLE	
6	17550-83021	1	TUBO ENTRADA AGUA	PIPE WATER INLET	TUYAU ENTREE EAU	
7	09280-28008	1	ANILLO TORICO	O-RING	ANNEAU TORIQUE	
8	01107-06203	2	TORNILLO	BOLT	VIS	
9	08321-21063	2	ARANDELA	WASHER	RONDELLE	
10	08322-21063	2	ARANDELA	WASHER	RONDELLE	
11	01514-06103	1	TORNILLO	SCREW	VIS	
12	17859-83001	1	MANGUITO BY PASS	HOSE WATER BYPASS	TUYAU BYPASS	
13	09401B13404	2	ABRAZADERA	CLAMP	COLLIER	
14	17841-83000	1	MANGUITO RADIADOR	HOSE RADIATOR	TUYAU RADIATEUR	
15	17851-83000	1	MANGUITO SALIDA	HOSE RADIADOR OUTLET	TUYAU SORTIE	
16	17852-83000	1	MANGUITO SALIDA	HOSE RADIADOR OUTLET	TUYAU SORTIE	
17	08005-00000	6	ABRAZADERA	CLAMP	COLLIER	
18	17860A83000	1	CODO RADIADOR	HOSE RADIATOR	CODE RADIATEUR	U.K.
	17860A83010	1	CODO RADIADOR	HOSE RADIATOR	TUYAU CODE RADIATEUR	
19	01514-06123	2	TORNILLO	BOLT	VIS	
20	17871A83010	1	MANGUITO ENTRADA	HOSE INLET TO VALVE	TUYAU A VALVE	
21	08002-00000	2	ABRAZADERA	CLAMP	COLLIER	
22	17872-83010	1	MANGUITO CALEFACTOR	HOSE VALVE TO HEATER	TUYAU FLEXIBLE	
23	17873A83000	1	MANGUITO ENTRADA CAL	HOSE HEATER INLET	TUYAU	
24	09401A20402	4	ABRAZADERA	CLAMP	COLLIER	
25	74812-83001	1	JUNTA PASO TUBOS	GROMMET HEATER HOSE	JOINT TUYAU CALEFACT	
26	74710-83020	1	VALVULA DE AGUA	VALVE WATER	VALVE EAU	
27	03241-06126	2	TORNILLO	SCREW	VIS	

FIG.20

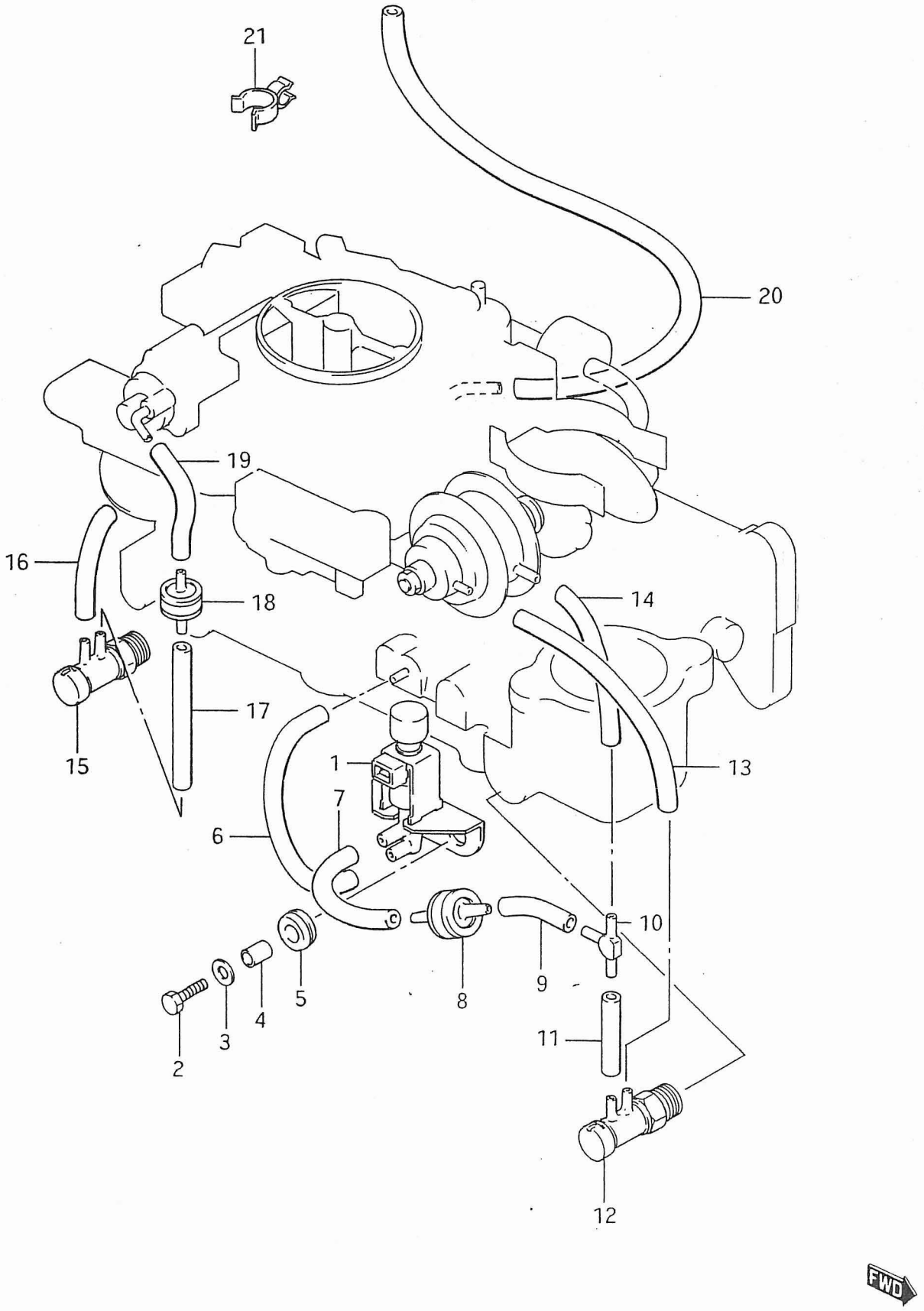

PUBLICACION N:A00523 GRUPO=CATAG SJ-413 SAMURAI SUBGRUPO=1C11VALVULAS CARBURA
EDICION N: 3 GROUP=CATAG S-413 SAMURAI SUBGROUP=1C11EMISSION CONTROL
GROUPE=CATAG SJ-413 SAMURAI SUBGROUPE=1C11VALVES CARBURAT.

N.FIG PLATE N.FIG	N.PIEZA PARTNUMBER N.PIECE	CAN QTY OUT	DENOMINACION	DESCRIPTION	DENOMINATION	OBSERVACIONES
1	18550-82021	1	VALVULA SOLENOIDE 3V	VALVE 3WAY SOLENOID	VALVE SOLENOIDE	
2	01107-06203	2	TORNILLO	BOLT	VIS	
3	09160-06027	2	ARANDELA	WASHER	RONDELLE	
4	09180-06106	2	CASQUILLO	SPACER	BAGUE	
5	09308-10004	2	ARANDELA DE GOMA	GROMMET	RONDELLE CAOUTCHOUC	
6	09343-03036	1	TUBO	HOSE VSV TO INTAKE	TUYAU	
7	09343-03021	1	TUBO	HOSE VSV TO JET	TUYAN	
8	18115-83000	1	VALVULA DE RETARDO	JET	VALVE DE RETARD	
9	09343-03020	1	TUBO	HOSE 3 WAY TO JET	TUYAU	
10	09367-04002	1	CRUZ DERIVACION 3VIA	3 WAY	T DERIVATION 3V	
11	09343-03020	1	TUBO	HOSE	TUYAU	
12	18123-83000	1	VALVULA TERMOSTATICA	VALVE BVS	VALVE THERMOSTAT	
13	09343-03079	1	TUBO VALVULA A CARB	HOSE BVSV TO CARB	TUYAU VALVE A CARBUR	
14	09343-03049	1	TUBO T DERIV-CARBUR	HOSE CARB TO 3 WAY	TUYAU T DERIV-CARBU	
15	18123-80400	1	VALVULA STARTE	VALVE BVS	VALVE STARTER	
16	09343-03049	1	TUBO VALVULA A ADMIS	HOSE BVSV TO INTAKE	TUYAU VALVE ADMISSIO	
17	09343-03036	1	TUBO	HOSE BVSV TO JET	TUYAU	
18	18115-83010	1	VALVULA STARTE AUTOM	JET	VALVE STARTER	
19	09343-03021	1	TUBO	HOSE	TUYAU	
20	09343-03029	1	TUBO DISTRIB-CARBUR	HOSE DISTRIB-CARB	TUYAU DISTRIB	
21	09408-00060	1	CLIP	CLIP	CLIP	

FIG. 21

E - 02

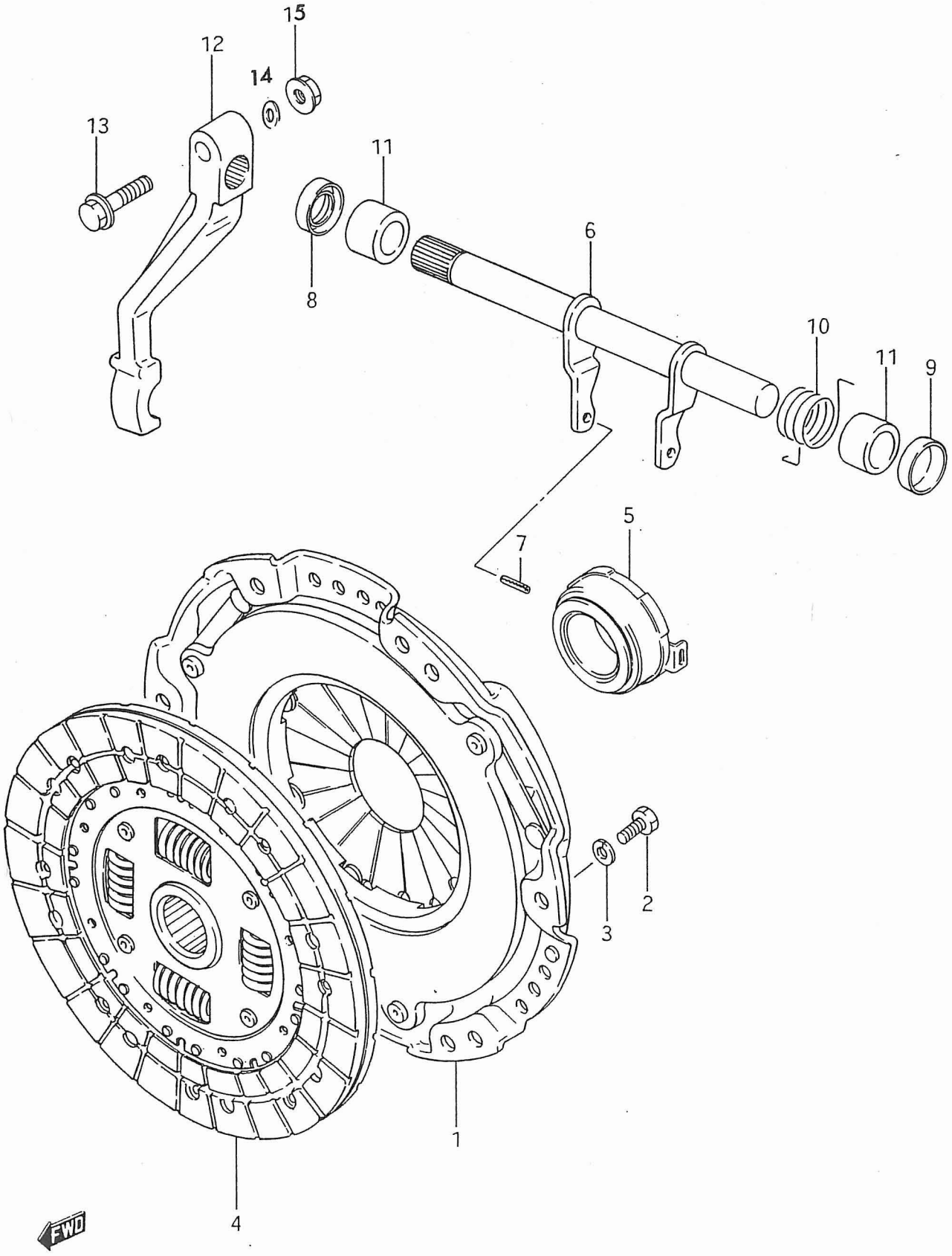

PUBLICACION N:A00523 GRUPO=CATAG SJ-413 SAMURAI SUBGRUPO=1E02EMBRAGUE
EDICION N: 3 GROUP=CATAG S-413 SAMURAI SUBGROUP=1E02CLUTCH ASSY
GROUPE=CATAG SJ-413 SAMURAI SUBGROUPE=1E02ENS EMBRAYAGE

N.FIG PLATE N.FIG	N.PIEZA PARTNUMBER N.PIECE	CAN QTY OUT	DENOMINACION	DESCRIPTION	DENOMINATION	OBSERVACIONES
1	22100A83020	1	PLATO DE EMBRAGUE	COVER ASSY CLUTCH	PLATEAU EMBRAYAGE	
2	01107-08163	6	TORNILLO	BOLT	VIS	
3	08321A31083	6	ARANDELA	WASHER	RONDELLE	
4	22400A83020	1	DISCO DE EMBRAGUE	DISK CLUTCH	DISQUE EMBRAYAGE	
5	09269B33001	1	RODAMIENTO EMPUJE	BEARING CLUTCH	ROULEMENT EMBRAYAGE	
6	23260-83012	1	EJE EMBRAGUE	SHAFT CLUTCH	AXE EMBRAYAGE	
7	09205-03019	1	PASADOR	PIN	GOUPILLE	
8	09284-14003	1	RETEN	OIL SEAL	JOINT D'HUILE	
9	09241-22003	1	TAPON	PLUG	BOUCHON	
10	09448-20006	1	MUELLE	SPRING	RESSORT	
11	09300-14012	2	CASQUILLO	BUSH	BAGUE	
12	23266-83001	1	BRAZO EMBRAGUE	ARM CLUTCH	BRAS EMBRAYAGE	
13	01514-08353	1	TORNILLO	BOLT	VIS	
14	08322-11083	1	ARANDELA	WASHER	RONDELLE	
15	08310-11083	1	TUERCA	NUT	ECROU	

FIG.22

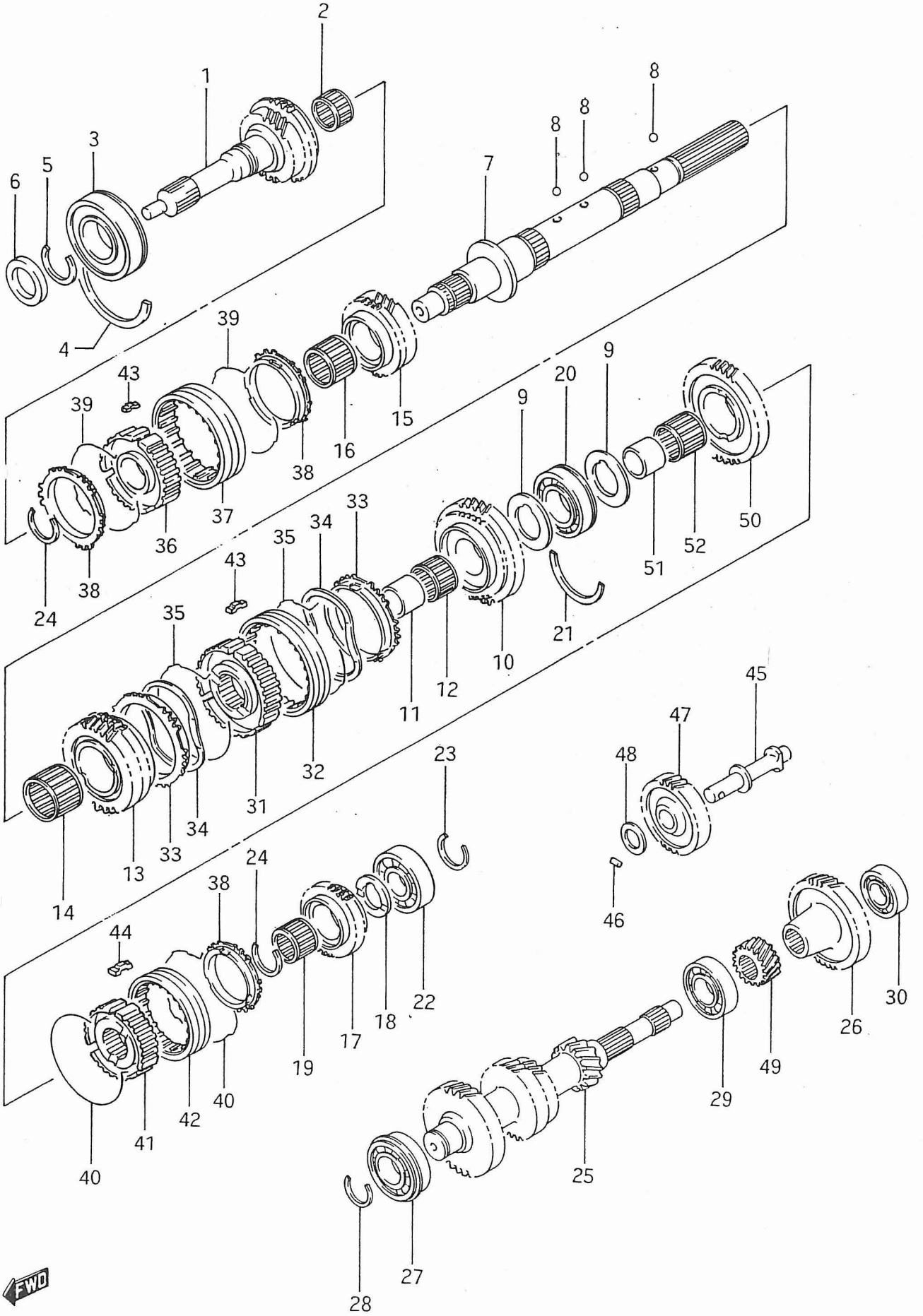
1
2
3
4
5
6
7
8
8
8
9
9
10
11
12
13
14
15
16
17
18
19
20
21
22
23
24
24
25
26
27
28
29
30
31
32
33
33
34
34
35
35
36
37
38
38
38
39
39
40
40
41
42
43
43
44
45
46
47
48
49
50
51
52
FWD

PUBLICACION N:A00523 GRUPO=CATAG SJ-413 SAMURAI SUBGRUPO=1E03CAJA CAMBIOS
EDICION N: 3 GROUP=CATAG S-413 SAMURAI SUBGROUP=1E03GEAR TRANSMISSIO
GROUPE=CATAG SJ-413 SAMURAI SUBGROUPE=1E03BOITE VITESSES

N.FIG PLATE N.FIG	N.PIEZA PARTNUMBER N.PIECE	CAN QTY OUT	DENOMINACION	DESCRIPTION	DENOMINATION	OBSERVACIONES
1	24110A83001	1	EJE PRIMARIO	SHAFT INPUT	AXE PRIMAIRE	
2	09263-20056	1	RODAMIENTO	BEARING	ROULEMENT	
3	09262-28005	1	RODAMIENTO	BEARING	ROULEMENT	
4	09390-68002	1	CIRCLIP	C RING	CIRCLIP	
5	09380-28007	1	CIRCLIP	C RING	CIRCLIP	
6	09283-25077	1	RETEN	OIL SEAL RENFORT	ARRETOIR	
7	24121-83001	1	EJE PRINCIPAL	SHAFT MAIN	AXE PRINCIPAL	
8	06111-06003	3	BOLA	BALL	BOULE	
9	09166-30007	2	ARANDELA	WASHER	RONDELLE	
10	24210A83001	1	ENGRANAJE EJE PRAL	GEAR MAINSHAFT LOW	ENGRENAGE AXE PRIN.	
11	09300-30003	1	CASQUILLO	BUSH	BAGUE	
12	09263-35015	1	RODAMIENTO	BEARING	ROULEMENT	
13	24220A83000	1	ENGRANAJE PRAL 2	GEAR MAINSHAFT 2	ENGRANAGE PRINC.	
14	09263-35015	1	RODAMIENTO	BEARING	ROULEMENT	
15	24230A83000	1	ENGRANEJE PRAL 3	GEAR MAINSHAFT 3	ENGRANAGE PRINC.	
16	09263-30016	1	RODAMIENTO	BEARING	ROULEMENT	
17	24250A83000	1	ENGRANAJE PRAL 5	GEAR MAINSHAFT STH	ENGRANAGE PRINC.	
18	09166-25009	1	ARANDELA	WASHER	RONDELLE	
19	09263-28021	1	RODAMIENTO	BEARING	ROULEMENT	
20	09262-30072	1	RODAMIENTO	BEARING	ROULEMENT	
21	09390-62010	1	CIRCLIP	CIRCLIP	CIRCLIP	
22	08113-63050	1	RODAMIENTO	BEARING	ROULEMENT	
23	09380-25011	1	CIRCLIP	CIRCLIP	CIRCLIP	
24	09380-28007	2	CIRCLIP	CIRCLIP	CIRCLIP	
25	24131-83001	1	EJE SECUNDARIO	SHAFT	AXE SECONDAIRE	
26	24351-83000	1	ENGRANAJE EJE SEC 5	GEAR COUNTER SHAFT 5	ENGRANAGE AXE	
27	09262-28015	1	RODAMIENTO DELANTERO	BEARING FRONT	ROULEMENT AVANT	
28	09380-28007	1	CIRCLIP	CIRCLIP	CIRCLIP	
29	09262-28006	1	RODAMIENTO CENTRAL	BEARING CENTER	ROULEMENT CENTRAL	
30	08113-63040	1	RODAMIENTO TRASERO	BEARING REAR	ROULEMENT ARRIERE	
31	24411-83000	1	CUBO SINCRONIZ BAJA	HUB SYNCHRON LOW	MOYEU SYNCH PETIT V	
32	24421-83004	1	CASQUILLO SINCRON BA	SLEEVE SYNCHRON LOW	BAGUE SYNCHR PETIT V	
33	24431-83001	1	ANILLO SINCRONIZ BAJ	RING SYNCHRON LOW	ANNEAU SYNCHRO P.V.	
34	24436-83000	2	MUELLE SINCRONIZ BAJ	SPRING SYNCHRON LOW	RESSORT SYNCHRO PV	
35	09388-00017	2	MUELLE DE BAJA	SPRING LOW	RESSORT PETIT V.	
36	24412-83000	1	CUBO SINCRONIZ ALTA	HUB SYNCHRONIZ HIGH	MOYEU SYNCHR G.V.	
37	24422-83003	1	CASQ SINCRONIZ ALTA	SLEEVE SYNCHRONIZ HI	BAGUE SYNCHR G.V.	
38	24432-83001	3	ANILLO SINCRONIZ ALT	RING SYNCHRONIZ HIGH	ANNEAU SYNCHR G.V.	
39	09388-00019	2	MUELLE DE ALTA	SPRING HIGH	RESSORT DE G.V.	
40	09388-00019	2	MUELLE 5 VELOC	SPRING STH SPEED	RESSORT 5 VITESSE	
41	24413-83001	1	CUBO M A	HUB REVERSE	CUBE M A	
42	24423-83003	1	CASQUILLO M A	SLEEVE REVERSE	BAGUE M A	

FIG.22-1

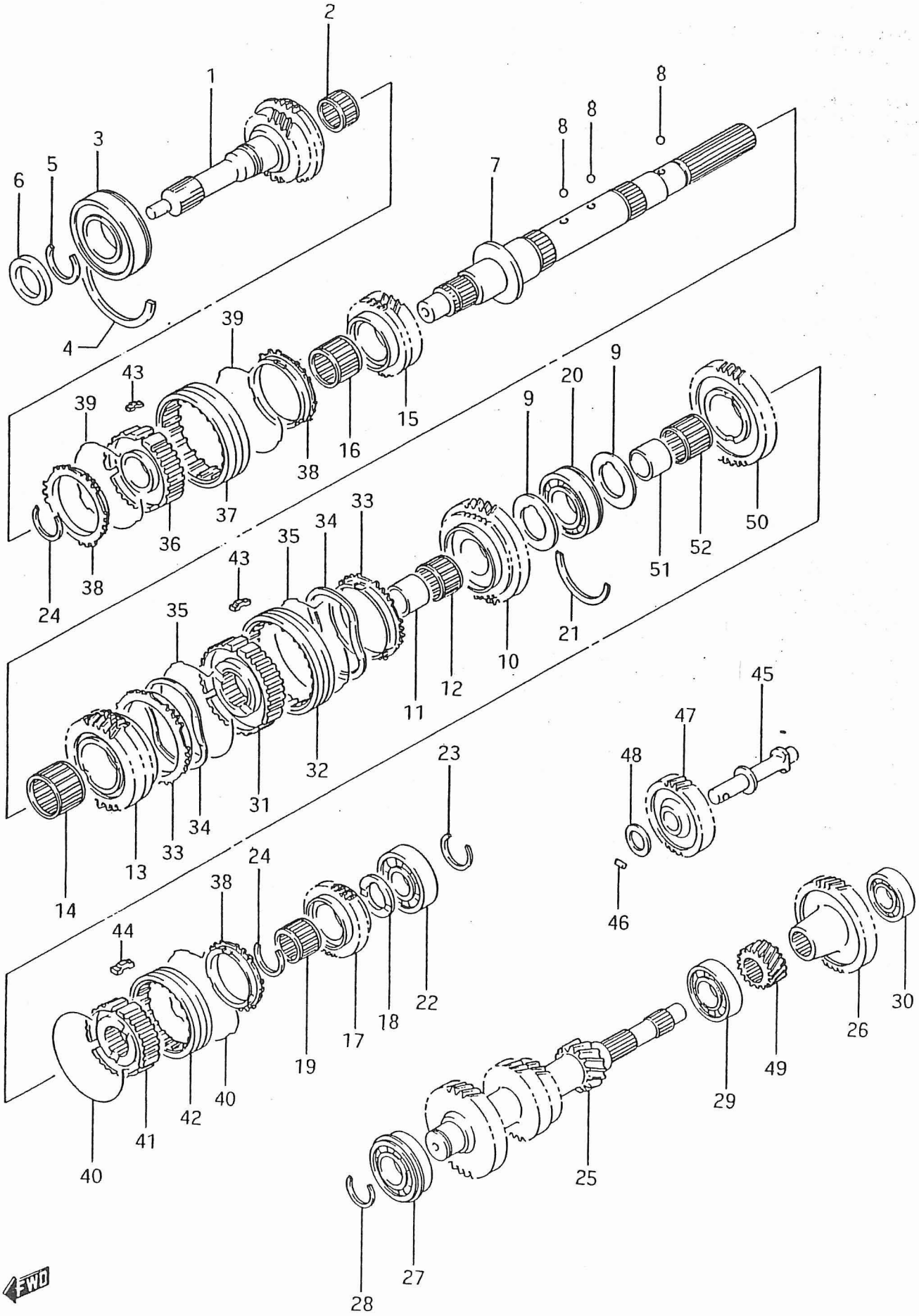
1
2
3
4
5
6
7
8
8
8
9
9
10
11
12
13
14
15
16
17
18
19
20
21
22
23
24
24
25
26
27
28
29
30
31
32
33
33
34
34
35
35
36
37
38
38
39
39
40
40
41
42
43
43
44
45
46
47
48
49
50
51
52
FWD

PUBLICACION N:A00523 GRUPO=CATAG SJ-413 SAMURAI SUBGRUPO=1E04ENGRAN.C.CAMBIO
EDICION N: 3 GROUP=CATAG S-413 SAMURAI SUBGROUP=1E04GEAR BOX TRANSM'
GROUPE=CATAG SJ-413 SAMURAI SUBGROUPE=1E04ENGREN.B.VITESS

N.FIG PLATE N.FIG	N.PIEZA PARTNUMBER N.PIECE	CAN QTY OUT	DENOMINACION	DESCRIPTION	DENOMINATION	OBSERVACIONES
43	09422-05011	6	CHAVETA	KEY	CLAVETTE	
44	09422-05012	3	CHAVETA	KEY	CLAVETTE	
45	24551-83000	1	EJE ENGRANAJE M.A.	SHAFT REVERSE IDLE	AXE ENGRENAGE M.A.	
46	09261-06003	1	PASADOR	PIN	GOUPILLE	
47	24560A83001	1	ENGRANAJE TENSOR MA	GEAR REVERSE IDLE	ENGRENAGE TENDEUR MA	
48	09166-16014	1	ARANDELA	WASHER	RONDELLE	
49	24671-83000	1	ENGRANAJE M.A.	GEAR REVERSE	ENGRENAGE M.A.	
50	24681-83000	1	ENGRANAJE EJE M.A.	GEAR SAHFT REVERSE	ENGRENAGE AXE MA	
51	09300-30003	1	CASQUILLO	BUSH	BAGUE	
52	09263-35015	1	RODAMIENTO	BEARING	ROULEMENT	

FIG. 23

E - 05

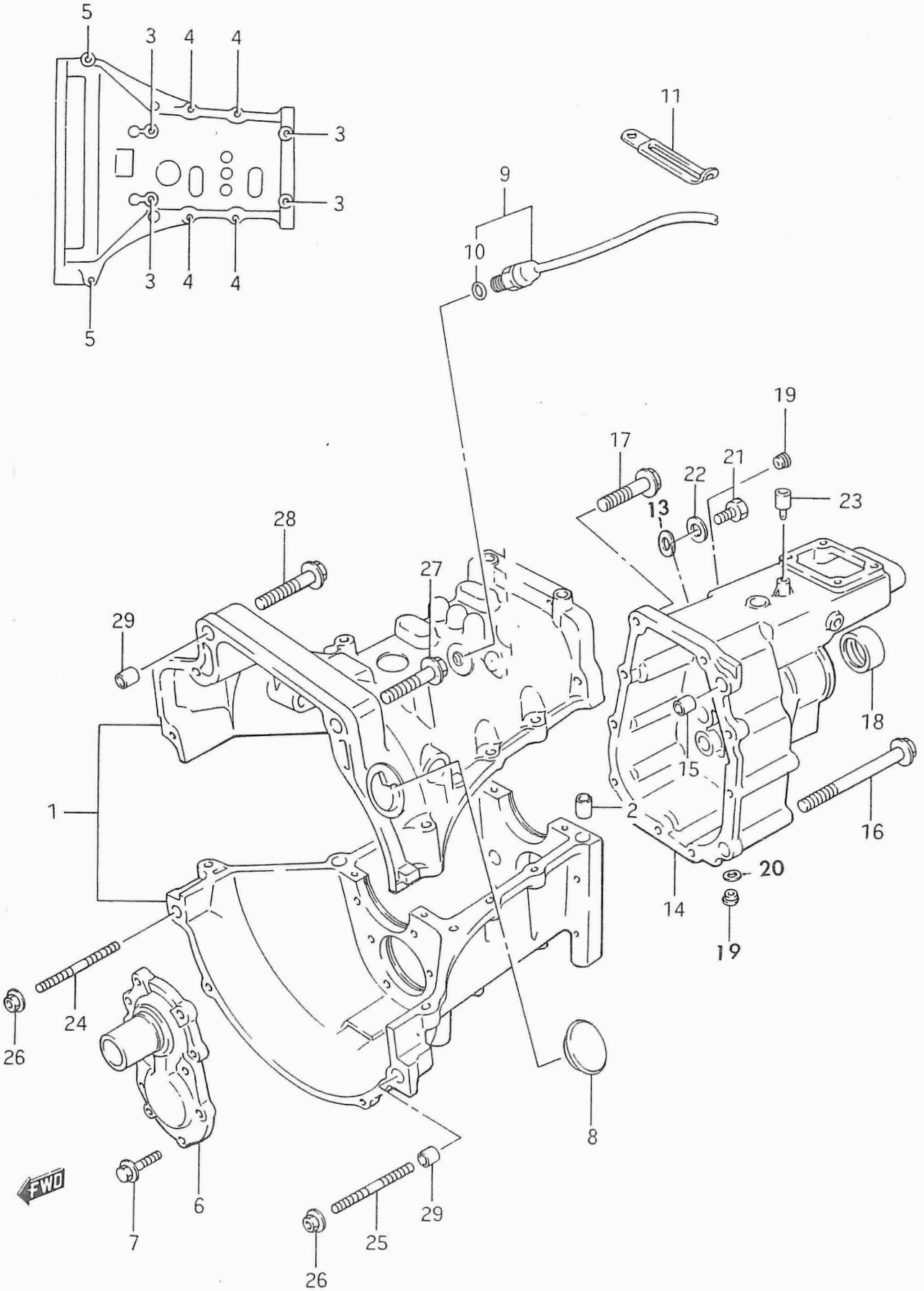
5
3
4
4
3
3
3
4
4
5
11
9
10
19
17
21
22
23
13
28
27
29
18
15
1
2
16
20
14
19
24
26
8
FWD
6
7
29
25
26

PUBLICACION N:A00523 GRUPO=CATAG SJ-413 SAMURAI SUBGRUPO=1E05CARTER C.CAMBIOS
EDICION N: 3 GROUP=CATAG S-413 SAMURAI SUBGROUP=1E05GEAR BOX HOUSING
GROUPE=CATAG SJ-413 SAMURAI SUBGROUPE=1E05CARTER B.V.

N.FIG PLATE N.FIG	N.PIEZA PARTNUMBER N.PIECE	CAN QTY OUT	DENOMINACION	DESCRIPTION	DENOMINATION	OBSERVACIONES
1	24700-83000	1	CONJ CARTER C C	CASE ASSY TRANSMISS	CARTER B.V.	
2	09206-13011	2	FIJA	KNOCK PIN	BAGUE	
3	09103-08131	4	TORNILLO	BOLT	VIS	
4	01517-08303	4	TORNILLO	BOLT	VIS	
5	01517-08653	2	TORNILLO	BOLT	VIS	
6	24741-83001	1	TAPA RETENCION COJIN	RETAINER INPUT SHAFT	COUVERCLE COUSSINET	
7	09103-08130	8	TORNILLO	BOLT	VIS	
8	09250-26005	1	TAPON INSPECCION	CAP INSPECTION	BOUCHON	
9	37610A80042	1	INTERRUPTOR 4X4	SWITCH BACK UP	INTERRUPTEUR 4X4	
10	37610B80042	1	ARANDELA	WASHER	RONDELLE	
11	09404A06415	1	ABRAZADERA	CLAMP	COLLIER	
12	35026-00000	1	CABLE	CABLE	CABLAGE	
13	29958A80050	1	ARANDELA	WASHER	RONDELLE	
14	24770-80420	1	CARTER EXTENSION	CASE EXTENSION	CARTER EXTENSION	
15	09206-13011	2	FIJ	KNOCK PIN	FIXE	
16	09103-08132	3	TORNILLO	BOLT	VIS	
17	01517-08353	7	TORNILLO	BOLT	VIS	
18	24780-83010	1	RETEN	OILSEAL	ARRETOIR	
19	09247A18003	2	TAPON LLENADO-VACIAD	PLUG OIL DRAIN FILLE	BOUCHON	
20	09160-18018	2	ARANDELA	WASHER	RONDELLE	
21	01104-08126	1	TAPON	PLUG	BOUCHON	
22	09168A08015	1	JUNTA	GASKET	JOINT	
23	24821-09000	1	TAPON RESPIRADERO	PLUG BREATHER	BOUCHON	
24	01421-10353	1	ESPARRAGO	STUD BOLT	GOUJON	
25	01421-10453	1	ESPARRAGO	STUD BOLT	GOUJON	
26	08316-16103	2	TUERCA	NUT	ECROU	
27	01537-10603	1	TORNILLO	BOLT	VIS	
28	01537-10703	1	TORNILLO	BOLT	VIS	
29	09206-13001	2	FIJA	KNOCK	FIXE	

FIG. 24

E - 06

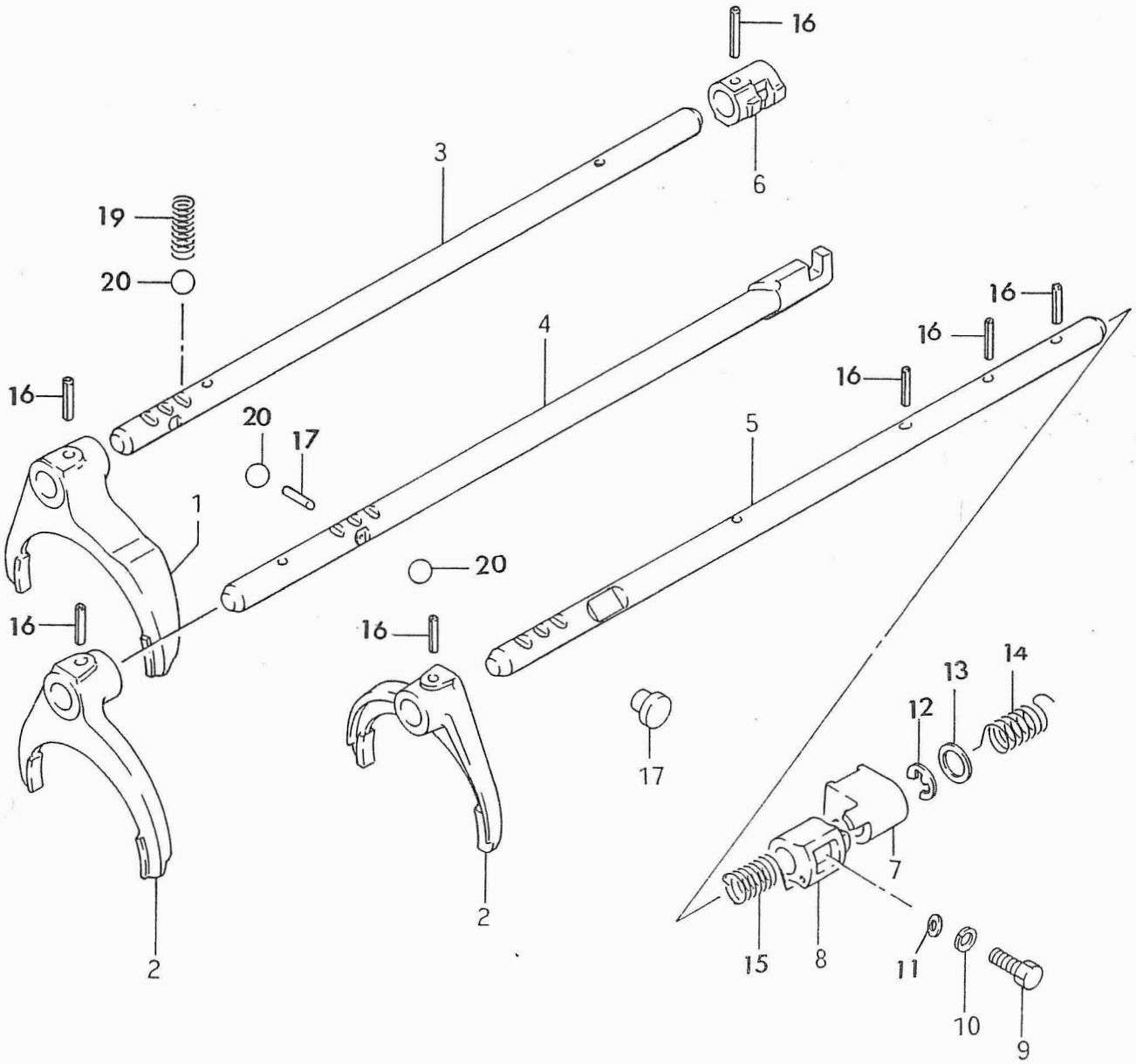

FWD

PUBLICACION N:A00523 GRUPO=CATAG SJ-413 SAMURAI SUBGRUPO=1E06HORQUILLAS SELEC
EDICION N: 3 GROUP=CATAG S-413 SAMURAI SUBGROUP=1E06GEAR SHIFTING FO
GROUPE=CATAG SJ-413 SAMURAI SUBGROUPE=1E06SELECT.VITESSES

N.FIG PLATE N.FIG	N.PIEZA PARTNUMBER N.PIECE	CAN QTY OUT	DENOMINACION	DESCRIPTION	DENOMINATION	OBSERVACIONES
1	25211-83002	1	HORQUILLA BAJA VELOC	FORK LOW SPEED	FOURCHETTE P.V.	
2	25221-83001	2	HORQUILLA ALTA M A	FORK HIG/REVERSE	FOURCHETTE G.V.	
3	25411-80401	1	EJE HORQUILLA BAJA	SHAFT LOW SPEED	AXE FOURCHETTE G.V.	
4	25420-80401	1	EJE HORQUILLA ALTA	SHAFT HIGH SPEED	AXE FOURCHETTE G.V.	
5	25451-80421	1	EJE HORQUILLA M.A.	SHAFT REVERSE FORK	AXE FOURCHETTE MA	
6	25241-83001	1	CABEZA SELEC BV.	YOKE LOW SPEED	TETE SELECT B.V.	
7	25261-83002	1	CABEZA SELEC 5	YOKE 5TH GEAR	TETE SELECT 5	
8	25271-83002	1	CABEZA SELEC EJE MA	YOKE REVERSE SHAFT	TETE SELECT AXE MA	
9	09135-08001	1	TORNILLO	BOLT	VIS	
10	08321B31086	1	ARANDELA	WASHER	RONDELLE	
11	08322-21083	1	ARANDELA	WASHER	RONDELLE	
12	08332A11106	1	ANILLO SIEGE	E RING	ANNEAU	
13	08212-14202	1	ARANDELA	WASHER	RONDELLE	
14	09448-18016	1	MUELLE	SPRING	RESSORT	
15	09448-18017	1	MUELLE	SPRING	RESSORT	
16	09205-05012	7	PASADOR	PIN	GOUPILLE	
17	09261-03015	1	RODILLO LOCALIZAC EJ	ROLLER SHAFT LOCATIN	ROULEAU	
18	09250-10006	1	TAPON	PLUG	BOUCHON	
19	09440-09019	3	MUELLE	SPRING	RESSORT	
20	06112-12004	5	BOLA	BALL	BILLE	

FIG. 25

E - 07

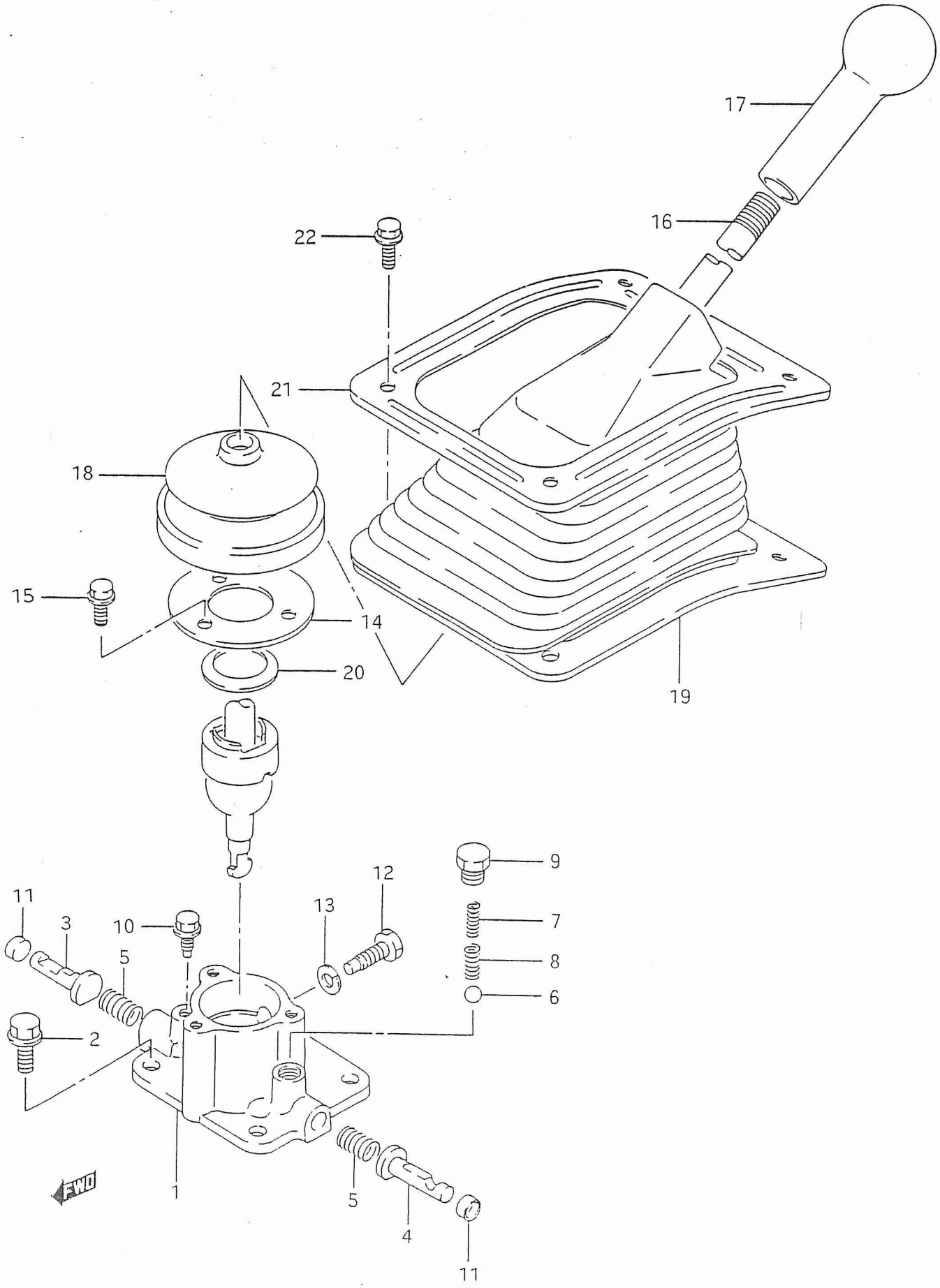

PUBLICACION N:A00523 GRUPO=CATAG SJ-413 SAMURAI SUBGRUPO=1E07PALANCA CAJ.CAMB
EDICION N: 3 GROUP=CATAG S-413 SAMURAI SUBGROUP=1E07GEAR SHIFTING
GROUPE=CATAG SJ-413 SAMURAI SUBGROUPE=1E07LEVIER B.V.

N.FIG PLATE N.FIG	N.PIEZA PARTNUMBER N.PIECE	CAN QTY OUT	DENOMINACION	DESCRIPTION	DENOMINATION	OBSERVACIONES
1	25121-83001	1	CAJA CONTROL PALANCA	CASE SHIFTING LEVER	CARCASSE LEVIER	
2	01514-08203	4	TORNILLO	BOLT	VIS	
3	25341-69002	1	EJE GUIA	PIN LOW SPEED	AXE GUIDE	
4	25342-69002	1	EJE GUIA MA	PIN REVERSE	AXE GUIDE M.A.	
5	09440-11005	2	MUELLE SELECTOR	SPRING SELECT	RESSORT SELECT	
6	06112-10004	1	BOLA	BALL	BILLE	
7	09440-04019	1	MUELLE INTERIOR	SPRING INNER	RESSORT INT	
8	09440-07005	1	MUELLE EXTERIOR	SPRING OUTER	RESSORT EXT	
9	09128-10001	1	TORNILLO MA	SCREW REVERSE	VIS M.A.	
10	09128-06032	1	TORNILLO BAJA VELOC	SCREW LOW SPEED	VIS PETITE V.	
11	09241-08003	2	TAPON	PLUG	BOUCHON	
12	09135-08001	1	TORNILLO LOCAL PALAN	BOLT LEVER LOCATING	VIS LEVIER	
13	08321B31086	1	ARANDELA	WASHER	RONDELLE	
14	25125A80001	1	TAPA PALANCA	COVER LEVER	COUVERCLE LEVIER	
15	01514-06163	3	TORNILLO	BOLT	VIS	
16	28101A83010	1	PALANCA CONTROL	LEVER CONTROL	LEVIER CONTROLE3	
17	28113-83010	1	BOLA PALANCA	KNOB LEVER	BOULE LEVIER	
18	28135-80000	1	GUARDA POLVOS	BOOT	PARE-POUSSIERE	
19	28136-83000	1	GUARDA POLVOS	BOOT	PARE-POUSSIERE	
20	09164A24003	1	ARANDELA	WASHER	RONDELLE	
21	28137-83000	1	TAPA GUARDAPOLVOS	COVER BOOT	COUVERCLE	
22	01514-06123	4	TORNILLO	BOLT	VIS	

FIG.26

G - 02

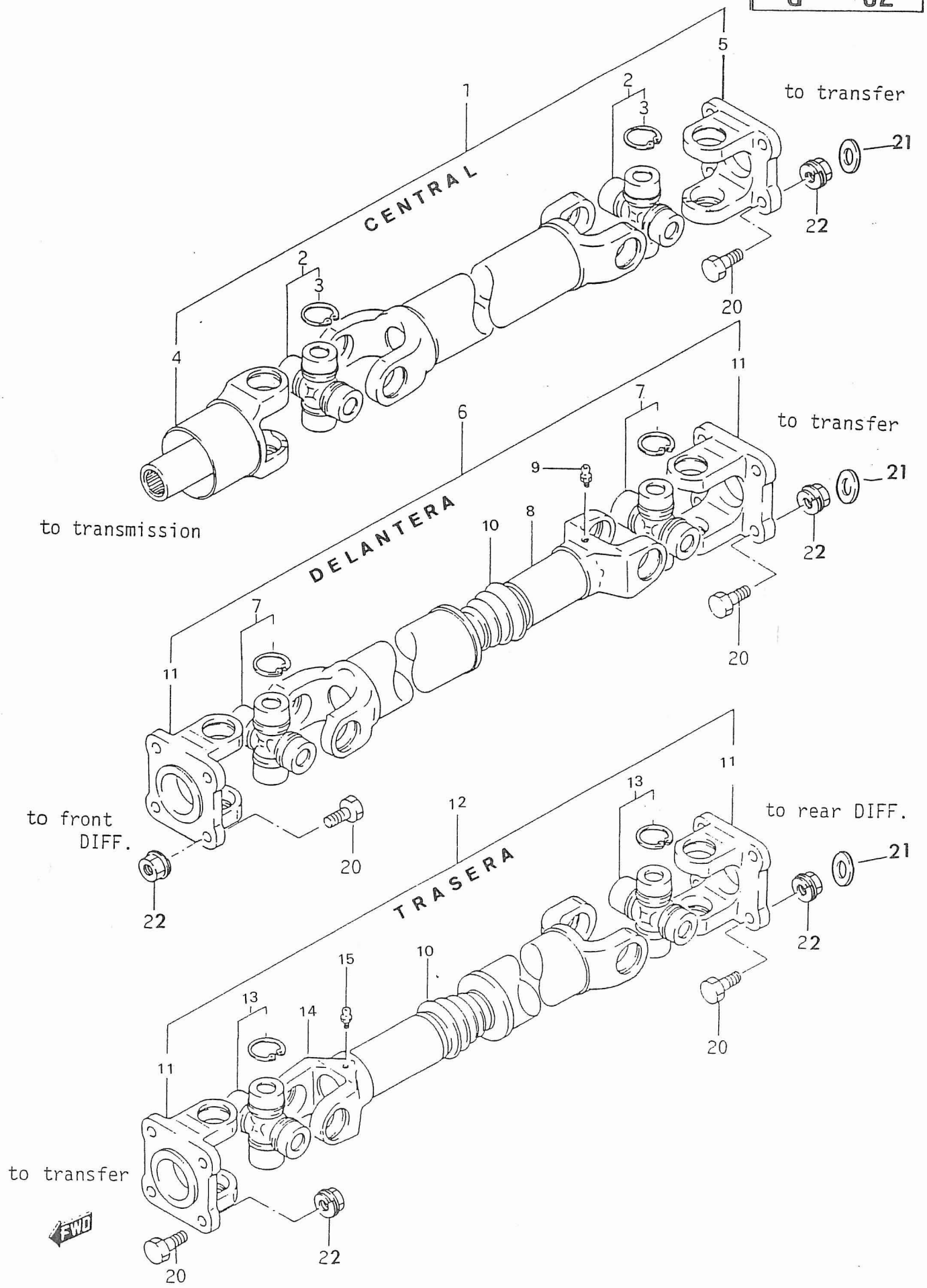
CENTRAL
DELANTERA
TRASERA
to transfer
to transfer
to transmission
to front DIFF.
to rear DIFF.
to transfer
FWD
1
2
3
4
5
6
7
8
9
10
11
12
13
14
15
20
21
22

PUBLICACION N:A00523 GRUPO=CATAG SJ-413 SAMURAI SUBGRUPO=1G02ARBOLES TRANSMIS
EDICION N: 3 GROUP=CATAG S-413 SAMURAI SUBGROUP=1G02PROPELLER SHAFT
GROUPE=CATAG SJ-413 SAMURAI SUBGROUPE=1G02TRANSMISSION

N.FIG PLATE N.FIG	N.PIEZA PARTNUMBER N.PIECE	CAN QTY OUT	DENOMINACION	DESCRIPTION	DENOMINATION	OBSERVACIONES
1	27101-83001	1	EJE PROPULSOR CENTRA	SHAFT ASSY PROPELLER	ENS AXE CENTRAL	
2	27200-83010	2	CRUCETA	JOINT ASSY	CROISSILLON	
3	08331-41256	8	CIRCLIP	CIRCLIP	CIRCLIP	
4	27140-83001	1	HORQUILLA DESLIZANTE	YOKE SLIDIDING	MACHOIRE GLISSEMENT	
5	27131-83001	1	HORQUILLA LADO BRIDA	YOKE JOINT FLANGE	MACHOIRE ORDINAIRE	
6	27102C83001	1	EJE PROPULSOR DEL	FRONT PROPELLER	ENS AXE AVANT	
7	27200B83010	2	CRUCETA	JOINT ASSY	CROISSISILLON	
8	27180B83001	2	HORQUILLA DESLIZA.	YOKE SLIDING	MACHOIRE GLISSEMENT	
9	08351-21008	1	ENGRASADOR	GREASE NIPPLE	GRAISSEUR	
10	27153B83000	1	GUARDAPOLVOS	BOOT	PARE POUSSIERE	
11	27131B83001	2	HORQUILLA LADO BRIDA	YOKE JOINT FLANGE	MACHOIRE COTE BRIDE	
12	27103C83201	1	EJE PROPULSOR TRAS	SHAFT ASSY REAR	ENS AXE ARRIERE	LONG BODY
	27103C83001	1	EJE PROPULSOR TRAS	SHAFT ASSY REAR	ENS AXE ARRIERE	
13	27200B83010	2	CRUCETA	JOINT ASSY	CROISSILLON	
14	27181-83001	1	HORQUILLA DESLIZANTE	YOKE SLIDING	MACHOIRE GLISSEMENT	
15	08351A21008	1	ENGRASADOR	GREASSE NIPPLE	GRAISEUR	
16	27183B83000	1	GUARDAPOLVOS	BOOT	PARE POUSSIERE	
20	09100-08172	16	TORNILLO	BOLT	VIS	
21	08321B31086	20	ARANDELA	WASHER	RONDELLE	
22	08310-12086	20	TUERCA	NUT	ECROU	

FIG. 27

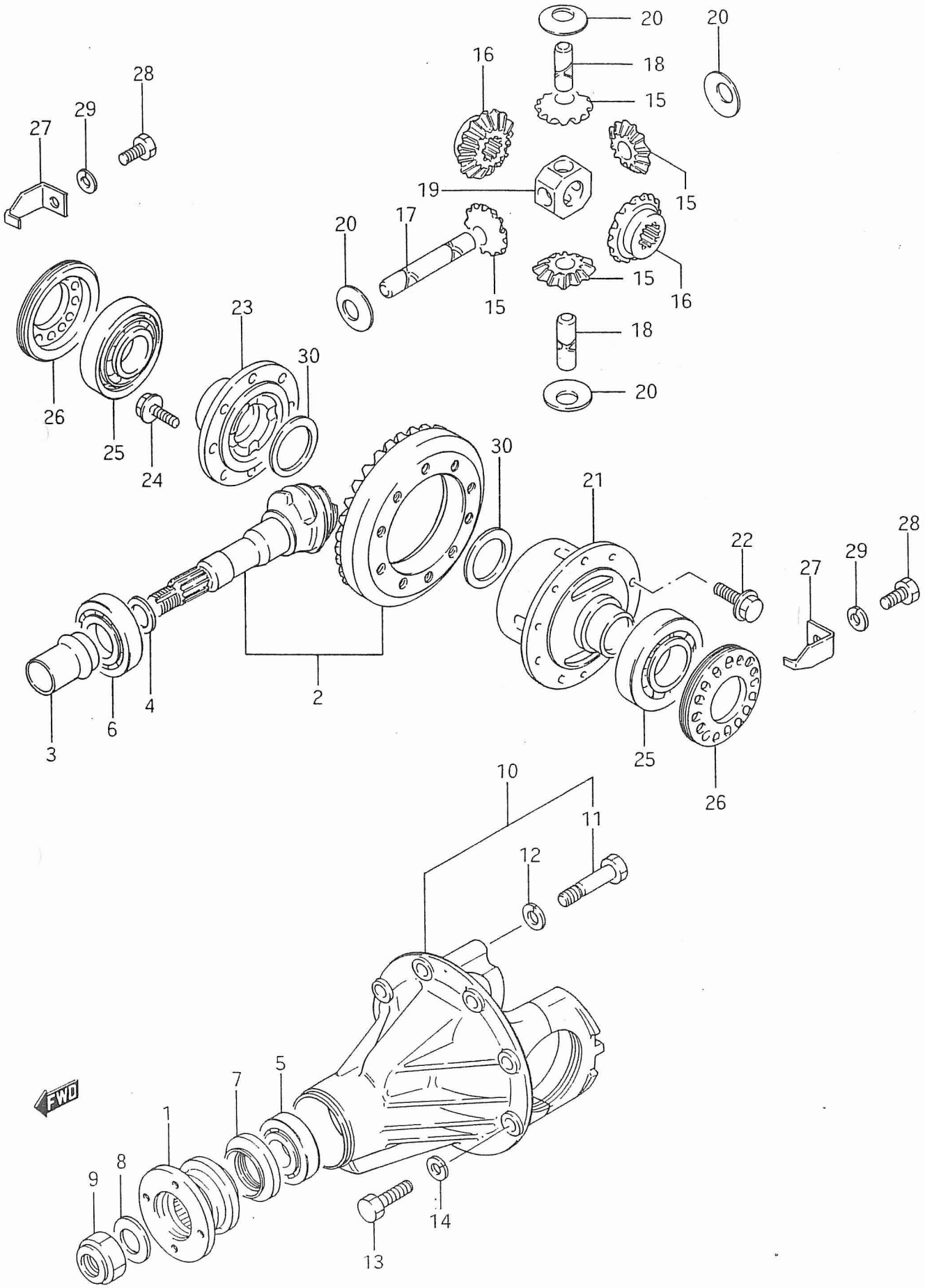
20
20
16
18
28
15
29
27
15
19
17
20
15
16
15
23
18
30
20
26
25
24
30
21
22
28
29
27
2
3
6
4
25
26
10
11
12
5
7
FWD
1
8
9
14
13

PUBLICACION N:A00523 GRUPO=CATAG SJ-413 SAMURAI SUBGRUPO=1G04DIFERENCIALES
EDICION N: 3 GROUP=CATAG S-413 SAMURAI SUBGROUP=1G04DIFERENTIAL GEAR
GROUPE=CATAG SJ-413 SAMURAI SUBGROUPE=1G04DIFFERE.AV-AR

N.FIG PLATE N.FIG	N.PIEZA PARTNUMBER N.PIECE	CAN QTY OUT	DENOMINACION	DESCRIPTION	DENOMINATION	OBSERVACIONES
1	27110-83001	2	BRIDA	FLANGE UNIVERSAL JOI	BRIDE UNIVERSEL	
2	27300-83821	2	CON.CORONA-PI\ON	PINION GEAR SET	JEU PIGNON-COURONNE	(41:11)
3	27315-83001	2	CASQUILLO	SPACER BEVEL PINION	BAGUE PIGNON	
4	09181-35012	2	SUPLEMENTO 1	SHIM 1	SUPLEMENT 1	
	09181-35013	2	SUPLEMENTO 1 03	SHIM 1 03	SUPLEMENT 1 03	
	09181-35014	2	SUPLEMENTO 1 06	SHIM 1 06	SUPLEMENT 1 06	
	09181-35015	2	SUPLEMENTO 1,09	SHIM 1 09	SUPLEMENT 1 09	
	09181-35016	2	SUPLEMENTO 1 12	SHIM 1 12	SUPLEMENT 1 12	
	09181-35017	2	SUPLEMENTO 1,15	SHIM 1 15	SUPLEMENT 1 15	
	09181-35018	2	SUPLEMENTO 1 18	SHIM 1 18	SUPLEMENT 1 18	
	09181-35019	2	SUPLEMENTO 1 21	SHIM 1 21	SUPLEMENT 1 21	
	09181-35020	2	SUPLEMENTO 1 24	SHIM 1 24	SUPLEMENT 1 24	
	09181-35021	2	SUPLEMENTO 1 27	SHIM 1 27	SUPLEMENT 1 27	
	09181-35022	2	SUPLEMENTO 1 30	SHIM 1 30	SUPLEMENT 1 30	
	09181-35023	2	SUPLEMENTO 1 33	SHIM 133	SUPLEMENT 1 33	
5	09265A30003	2	RODAMIENTO DELANTERO	BEARING FRONT	ROULEMENT AVANT	
6	09265-35002	2	RODAMIENTO TRASERO	BEARING REAR	ROULEMENT ARRIERE	
7	09283-40013	2	RETEN	OIL SEAL	ARRETOIR	
8	09160-20056	2	ARANDELA	WASHER	RONDELLE	
9	09159-20003	2	TUERCA	NUT	ECROU	
10	27450-83000	1	CARTER DIFERENCIAL	CARRIER ASSY	CARTER DIF	
11	09111-12009	8	TORNILLO	BOLT	VIS	
12	08321A31126	8	ARANDELA	WASHER	RONDELLE	
13	01107-08253	16	TORNILLO	BOLT	VIS	
14	08321B31086	16	ARANDELA	WASHER	RONDELLE	
15	27331-83000	8	PINON SATELITE	PINION DIFERENTIAL	PIGNON DIFFERENT	
16	27341-83000	2	PINON PLANETARIO TRA	GEAR DIFF REAR	PIGNNON PLANET AR	
	27341-83100	2	PINON PLANETARIO DEL	GEAR DIFF FRONT	PIGNON PLANET AV	
17	27351-83000	2	EJE PI/ON SATELITE	SHAFT PINION 1	AXE PIGNNON SATELITE	
18	27355-83000	4	EJE PLANETARIO	SHAFT PINION 2	AXE PIGNNON PLANETAR	
19	27356A63000	2	ALOJAMIENTO PI/ON	HOUSING PINION	LOGEMENT PIGNON	
20	09164-15006	8	ARANDELA	WASHER	RONDELLE	
21	27411-83000	2	SEMI CARTER LI	CASE DIFF LH	DEMI-CARTER DIF	
22	09103-10028	20	TORNILLO	BOLT	VIS	
23	27421-83000	2	SEMICARTER LD	CASE DIFF RH	DEMI-CARTER CD	
24	09103-08030	16	TORNILLO	BOLT	VIS	
25	09265-45002	4	RODAMIENTO	BEARING	ROULEMENT	
26	27461-83000	4	TUERCA DE AJUSTE	ADJUSTER BEARING	ECROU REGLAGE	
27	27462-63202	4	PLACA CIERRE	PLATE LOCK BEARING	PLAQUE ROULEMENT	
28	01104-08126	4	TORNILLO	BOLT	VIS	
29	08321B31086	4	ARANDELA	WASHER	RONDELLE	
30	09160-35002	4	ARANDELA EMPUJE 1,0	THRUST WASHER 1 0	RONDELLE 1 0	
	09160-35003	4	ARANDELA EMPUJE 1 1	THRUST WASHER 1 1	RONDELLE 1 1	
	09160-35004	4	ARANDELA EMPUJE 1 2	THRUST WASHER 1 2	RONDELLE 1 2	

FIG. 27

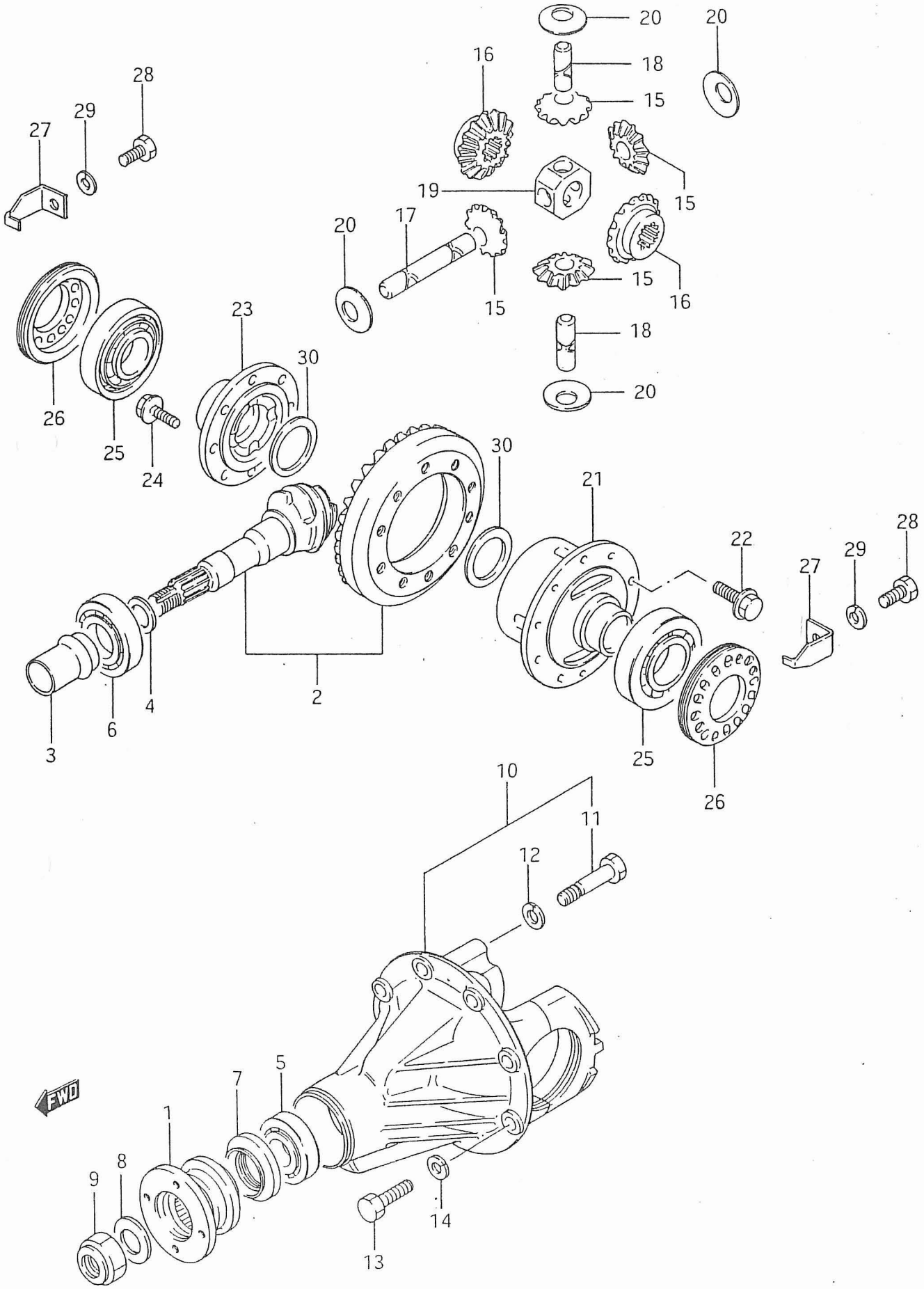
20
20
16
18
15
28
29
27
15
19
17
20
15
16
15
23
18
30
20
26
25
24
30
21
22
28
29
27
2
4
6
3
25
26
10
11
12
5
7
FWD
1
8
9
14
13

PUBLICACION N:A00523 GRUPO=CATAG SJ-413 SAMURAI SUBGRUPO=1G04DIFERENCIALES
EDICION N: 3 GROUP=CATAG S-413 SAMURAI SUBGROUP=1G04DIFERENTIAL GEAR
GROUPE=CATAG SJ-413 SAMURAI SUBGROUPE=1G04DIFFERE.AV-AR

N.FIG PLATE N.FIG	N.PIEZA PARTNUMBER N.PIECE	CAN QTY OUT	DENOMINACION	DESCRIPTION	DENOMINATION	OBSERVACIONES
	09160-35006	4	ARANDELA EMPUJE 09	THRUST WASHER 09	RONDELLE 09	

FIG. 28

E - 08

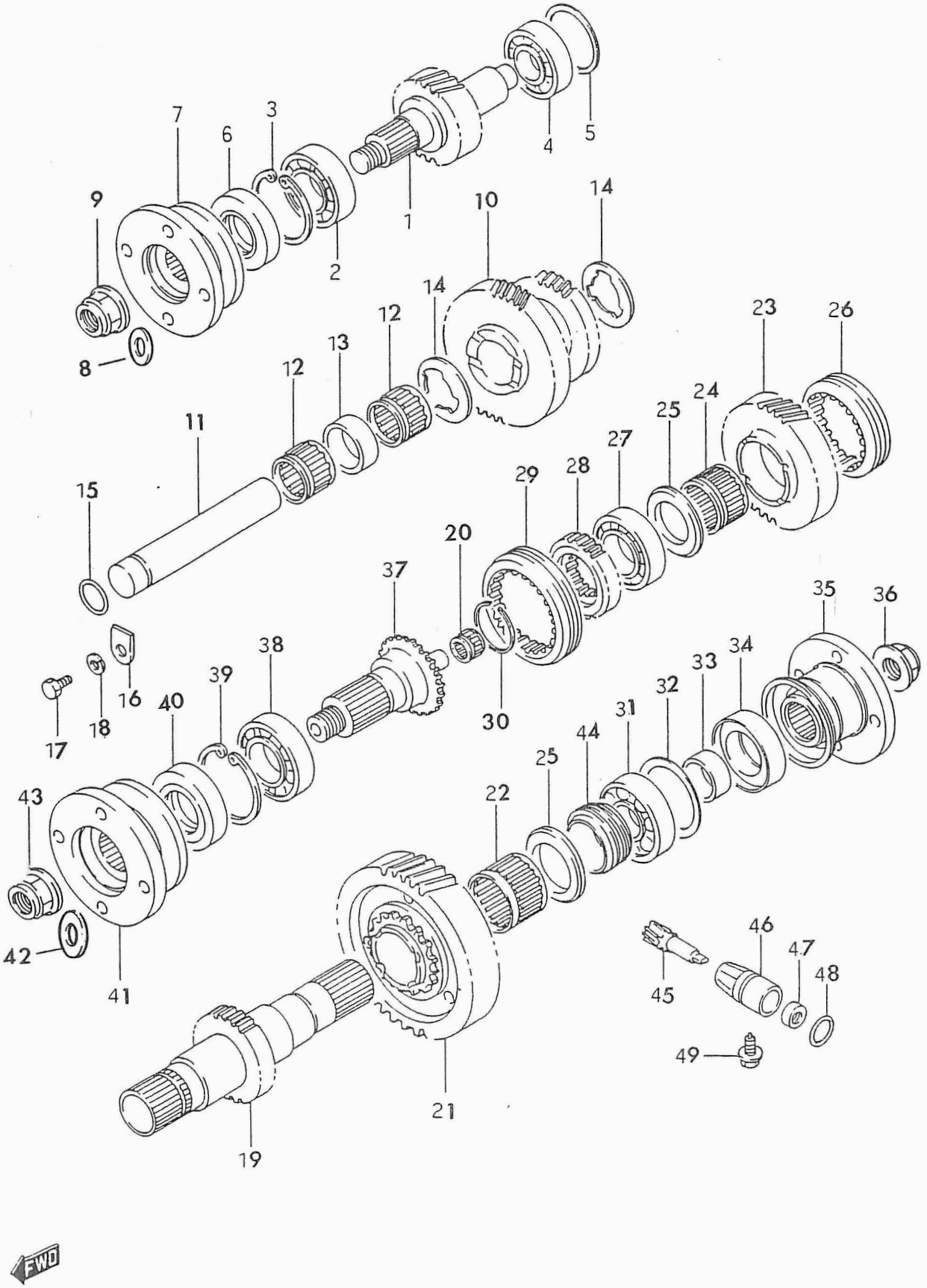

1
2
3
4
5
6
7
8
9
10
11
12
12
13
14
14
15
16
17
18
19
20
21
22
23
24
25
25
26
27
28
29
30
31
32
33
34
35
36
37
38
39
40
41
42
43
44
45
46
47
48
49
FWD

PUBLICACION N:A00523 GRUPO=CATAG SJ-413 SAMURAI SUBGRUPO=1E08CAJA TRANSFERENC
EDICION N: 3 GROUP=CATAG S-413 SAMURAI SUBGROUP=1E08TRANSFER GEAR
GROUPE=CATAG SJ-413 SAMURAI SUBGROUPE=1E08BOITE TRANSFERT

N.FIG PLATE N.FIG	N.PIEZA PARTNUMBER N.PIECE	CAN QTY OUT	DENOMINACION	DESCRIPTION	DENOMINATION	OBSERVACIONES
1	29111-83050	1	EJE ENTRADA	SHAFT	ARBRE ENTREE	
2	29981-80050	1	RODAMIENTO DELANTERO	BEARING FRONT	ROULEMENT AVANT	
3	29992-80050	1	CIRCLIP	CIRCLIP	CIRCLIP	
4	29982-80050	1	RODAMIENTO TRASERO	BEARING REAR	ROULEMENT ARRIERE	
5	29117-80050	2	SUPLEMENTO 0,1	SHIM 0 1	SUPPLEMENT 01	
	29118-80050	2	SUPLEMENTO 0'3	SHIM 0'3	SUPPLEMENT 0,3	
	29119-80050	2	SUPLEMENTO 0'5	SHIM 0'5	SUPPLEMENT 0,5	
6	29971-80050	1	RETEN	OIL SEAL	ARRETOIR	
7	27110-83050	1	BRIDA	FLANGE	BRIDE	
8	29955-80050	1	ARANDELA	WASHER	RONDELLE	
9	29951-80050	1	TUERCA	NUT	ECROU	
10	29121-83050	1	ENGRANAJE INTERMEDIO	GEAR COUNTER	ENGRENAGE INTERMED	
11	29131-80050	1	EJE INTERMEDIO	SHAFT	AXE INTERMEDI.	
12	29983-80050	2	RODAMIENTO	BEARING	ROULEMENT	
13	29962-80050	1	CASQUILLO	SPACER	BAGUE	
14	29956A80050	2	ARANDELA	WASHER	RONDELLE	
15	29975-80050	1	ANILLO TORICO	O RING	JOINT TORIQUE	
16	29136-80050	1	PLACA	PLATE	PLAQUE	
17	01104-08163	1	TORNILLO	BOLT	VIS	
18	08321B31086	1	ARANDELA	WASHER	RONDELLE	
19	29141-80050	1	EJE TRASERO	SHAFT OUTPUT REAR	ARBRE ARRIERE	
20	29986-80050	1	RODAMIENTO	BEARING	ROULEMENT	
21	29211-83050	1	ENGRANAJE DE BAJA	GEAR OUTPUT LOW	ENREGANGE PETIT V.	
22	29984-80050	1	RODAMIENTO	BEARING	ROULEMENT	
23	29221-83050	1	ENGRANAJE DE ALTA	GEAR OUTPUT HIGH	ENGRENAGE G.V.	
24	29985-80050	1	RODAMIENTO	BEARING	ROULEMENT	
25	29959-80050	2	ARANDELA	WASHER	RONDELLE	
26	29241-80050	1	CASQUILLO	SLEEVE	BAGUE	
27	08173-63060	1	RODAMIENTO DELANTERO	BEARING FRONT	ROULEMENT AVANT	
28	29231-80050	1	MANGUITO ARRASTRE	HUB FRONT	CUBE D'ENTRAINEMENT	
29	29241-80050	1	MANGUITO DESPLAZABLE	SLEEVE FRONT	CUBE D'ENTRAINEMENT	
30	29911-80050	1	CIRCLIP	CIRCLIP	CIRCLIP	
31	29981-80050	1	RODAMIENTO TRASERO	BEARING GEAR	ROULEMENT ARRIERE	
32	29147-80050	2	SUPLEMENTO 0,1	SHIM 0 1	SUPPLEMENT 01	
	29148-80050	2	SUPLEMENTO 0 3	SHIM 0 3	SUPPLEMENT 03	
	29149-80050	2	SUPLEMENTO 0 5	SHIM 0 5	SUPPLEMENT 05	
33	29143-80050	1	RETENEDOR	RETAINER	ARRET	
34	29972-80050	1	RETEN	OIL SEAL	ARRETOIR	
35	27110-83251	1	CON BRIDA JUNTA	FLANGE UNIVERS JOINT	BRIDE COMPLETE	
36	29951-83050	1	TUERCA	NUT	ECROU	
37	29151-80050	1	EJE DELANTERO SALIDA	SHAFT OUTPUT FRONT	AXE AVANT SORTIE	
38	29981-80050	1	RODAMIENTO	BEARING	ROULEMENT	

FIG. 28-1

E - 09

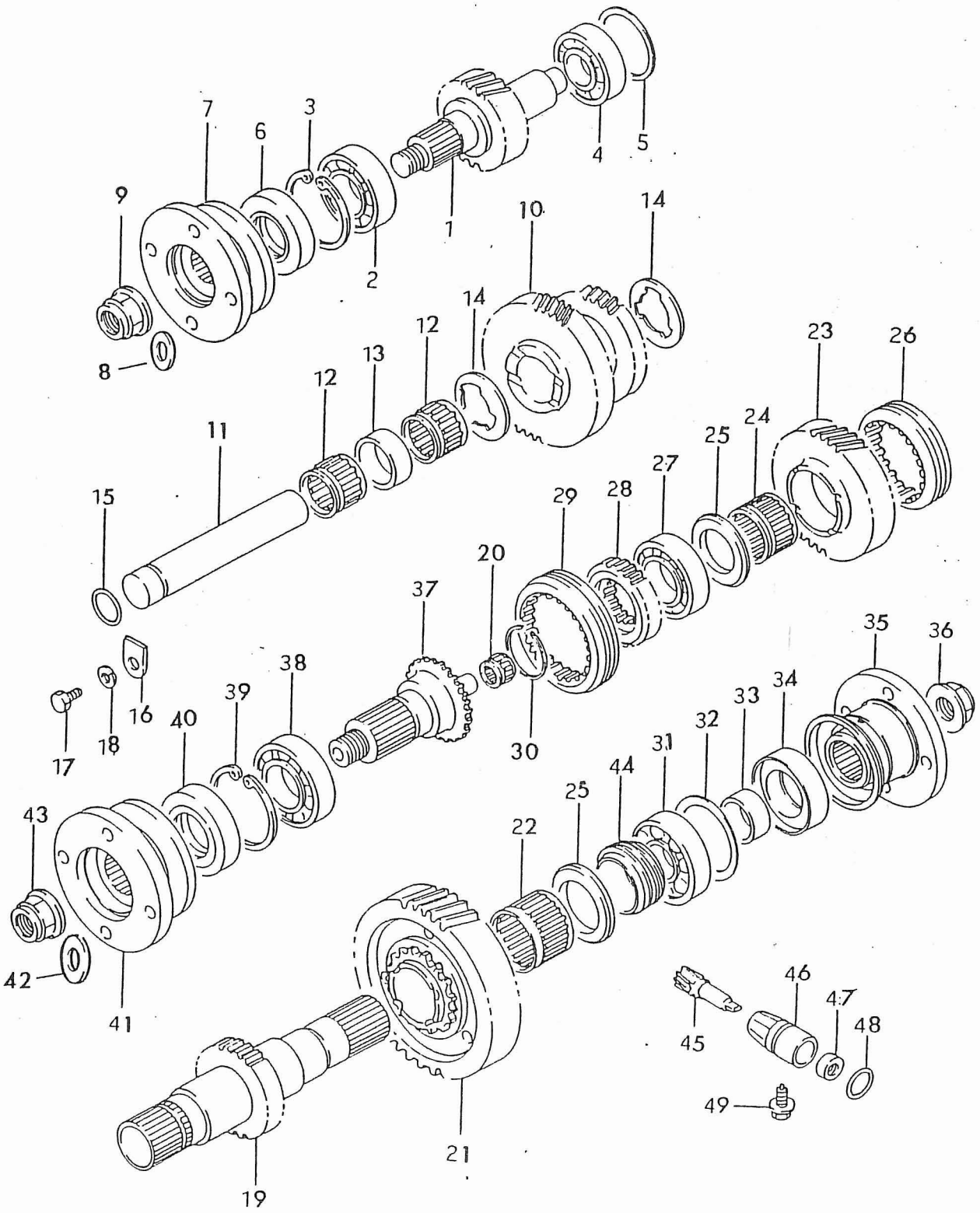

1
2
3
4
5
6
7
8
9
10
11
12
12
13
14
14
15
16
17
18
19
20
21
22
23
24
25
25
26
27
28
29
30
31
32
33
34
35
36
37
38
39
40
41
42
43
44
45
46
47
48
49
FWD

PUBLICACION N:A00523 GRUPO=CATAG SJ-413 SAMURAI SUBGRUPO=1E09ENGRAN.TRANSFERE
EDICION N: 3 GROUP=CATAG S-413 SAMURAI SUBGROUP=1E09GEAR, TRANSFER
GROUPE=CATAG SJ-413 SAMURAI SUBGROUPE=1E09ENGREN.TRANSFER

N.FIG PLATE N.FIG	N.PIEZA PARTNUMBER N.PIECE	CAN QTY OUT	DENOMINACION	DESCRIPTION	DENOMINATION	OBSERVACIONES
39	29992-80050	1	CIRCLIP	CIRCLIP	CIRCLIP	
40	29971-80051	1	RETEN	OIL SEAL	ARRETOIR	
41	27110-83050	1	BRIDA	FLANGE UNIVERSAL	BRIDE	
42	29995-80050	1	ARANDELA	WASHER	RONDELLE	
43	29951-80050	1	TUERCA	NUT	ECROU	
44	29411-83050	1	ENGRANAJE CONDUCTOR	GEAR SPEEDOMETER	ENGRENAGE CONDUCTEUR	
45	29421-80450	1	ENGRANAJE CONDUCTOR	GEAR SPEEDOMETER	ENGRENAJE CONDUCTEUR	
46	29431-80050	1	ALOJAMIENTO	HOUSING	CARTER	
47	29973-80050	1	RETEN	O-RING	JOINT TORIQUE	
48	09280-19001	1	ANILLO TORICO	O-RING	ANNEAU TORIQUE	
49	09128-06032	1	TORNILLO	SCREW	VIS	

FIG. 29

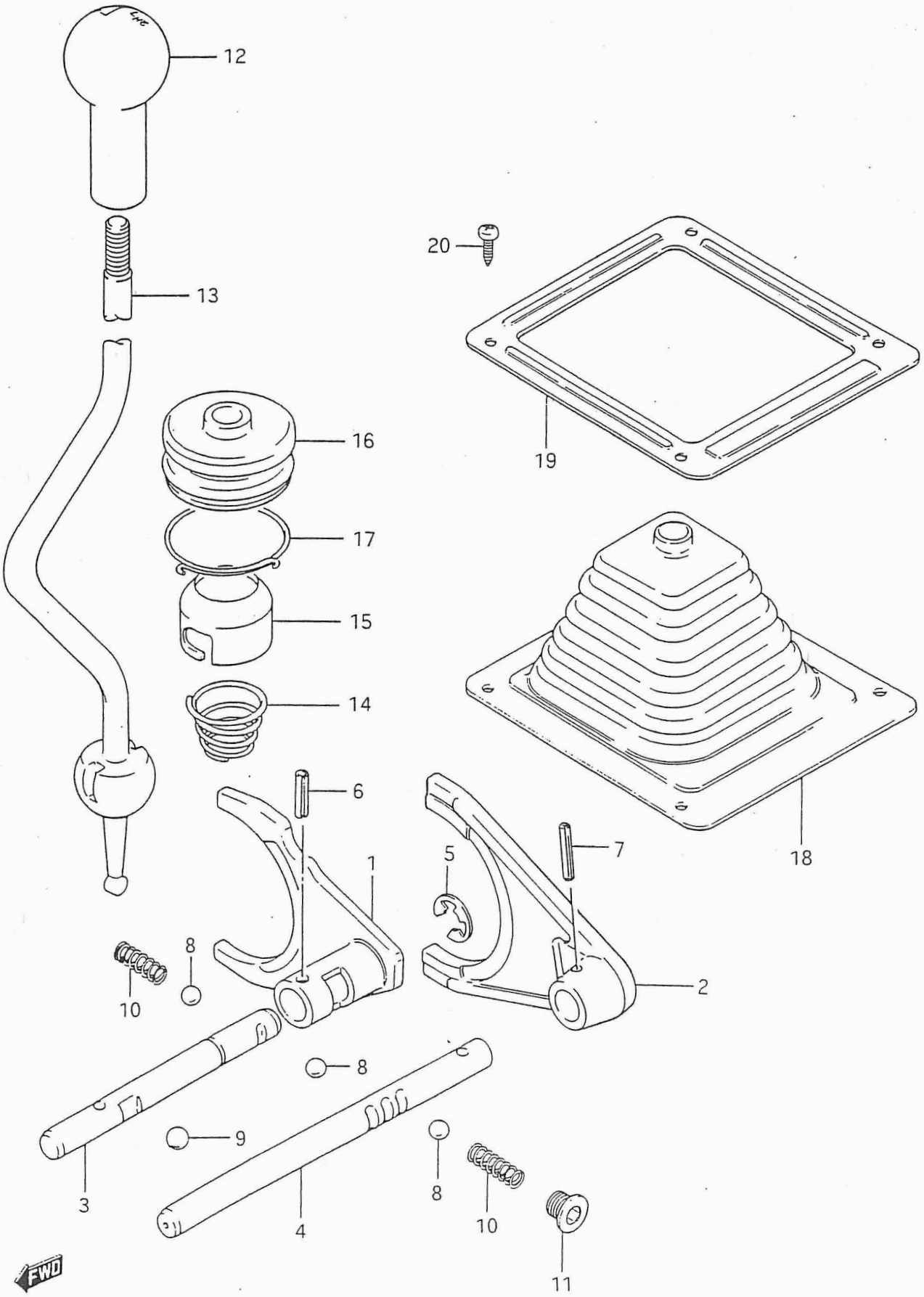

PUBLICACION N:A00523 GRUPO=CATAG SJ-413 SAMURAI SUBGRUPO=1E10PALANCA TRANSFER
EDICION N: 3 GROUP=CATAG S-413 SAMURAI SUBGROUP=1E10TRANS GEAR SHIFT
GROUPE=CATAG SJ-413 SAMURAI SUBGROUPE=1E10LEVIER B.TRANSF.

N.FIG PLATE N.FIG	N.PIEZA PARTNUMBER N.PIECE	CAN QTY OUT	DENOMINACION	DESCRIPTION	DENOMINATION	OBSERVACIONES
1	29310-80050	1	HORQUILLA SELECTORA	FORK FRONT DRIVE	FOURCHETTE SELECT	
2	29321-80052	1	HORQUILLA REDUCTORA	FORK REDUCTION	FOURCHETTE REDUCTION	
3	29331-80050	1	EJE SELECT TRANSMIS	SAHFT FRONT DRIVE	AXE SELECT TRANSM.	
4	29332-80051	1	EJE SELECT REDUCTOR	SHAFT REDUCTION	AXE SELECT REDUCC.	
5	08332A11106	1	ANILLO	E RING	ANNEAU	
6	09205-04003	1	PASADOR	PIN	GOUPILLE	
7	09205-04001	1	PASADOR L 22	PIN L 22	GOUPILLE L 22	
	09205-04003	1	PASADOR L 18	PIN L 18	GOUPILLE L 18	
8	06112-10004	3	BOLA	BALL	BILLE	
9	06112-12004	1	BOLA	BALL	BILLE	
10	29995-80050	2	MUELLE	SPRING	RESSORT	
11	29941-80050	1	TORNILLO	SCREW	VIS	
12	29344-83010	1	BOLA PALANCA	KNOB LEVER	BOULE LEVIER	
13	29341-80701	1	PALANCA CONTROL	LEVER CONTROL	LEVIER CONTROL	
14	29996-80050	1	MUELLE	SPRING	RESSORT	
15	29348-80050	1	CAZOLETA	SHEET LEVER	CASSOLETE LEVIER	
16	29345-80051	1	GUARDAPOLVOS	BOOT	PARA POUSSIERE.	
17	09401-50402	1	ABRAZADERA	CLAMP	COLLIER	
18	29346-80002	1	GUARDAPOLVOS	BOOT LEVIER	PARE POUSSIERE	
19	29347-80001	1	TAPA	COVER	COUVERCLE	
	29347A80001	1	TAPA NEGRA	BLACK COVER	COUVERCLE NOIR	
20	03141-05125	4	TORNILLO NEGRO	SCREW BLACK	VIS NOIR	
	03141-06123	4	TORNILLO	SCREW	VIS	

FIG. 30

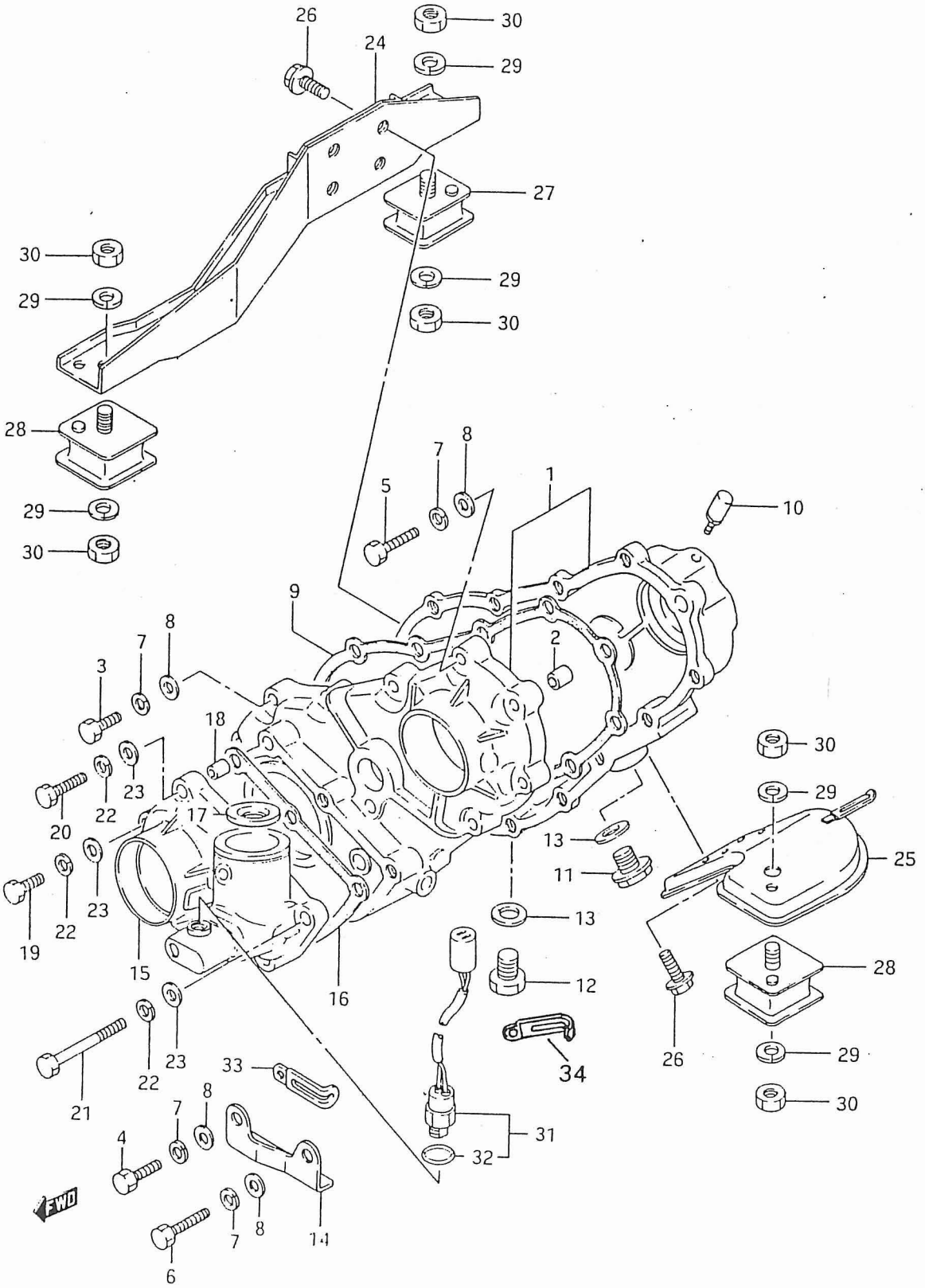
26
24
30
29
27
30
29
29
30
28
29
30
7
8
5
1
10
9
8
7
3
2
18
30
23
22
20
17
29
13
25
11
23
22
19
15
13
16
12
28
23
22
21
33
34
26
29
30
8
7
4
31
32
FWD
8
7
14
6

PUBLICACION N:A00523 GRUPO=CATAG SJ-413 SAMURAI SUBGRUPO=1E11CARTES TRANSFERE
EDICION N: 3 GROUP=CATAG S-413 SAMURAI SUBGROUP=1E11CASE TRANSFER
GROUPE=CATAG SJ-413 SAMURAI SUBGROUPE=1E11CARTER TRANSFERT

N.FIG PLATE N.FIG	N.PIEZA PARTNUMBER N.PIECE	CAN QTY OUT	DENOMINACION	DESCRIPTION	DENOMINATION	OBSERVACIONES
1	29510-80051	1	CARTER TRANSFERENCIA	CASE ASSY TRANSFER	CARTER TRANSFERENCES	
2	29527-80050	2	FIJA	PIN	GOND	
3	01107-08303	2	TORNILLO	BOLT	VIS	
4	01107-08353	1	TORNILLO	BOLT	VIS	
5	01107-08403	8	TORNILLO	BOLT	VIS	
6	01107-08453	1	TORNILLO	BOLT	VIS	
7	08321B31086	11	ARANDELA	WASHER	RONDELLE	
8	08322-11086	11	ARANDELA	WASHER	RONDELLE	
9	29525-80050	1	JUNTA CENTRAL	GASKET CENTER	JOINT CENTRALE	
10	29515-80050	1	TAPON RESPIRADERO	PLUG BREATHER	BOUCHON	
11	29945A80050	1	TAPON LLENADO	PLUG OIL FILLER	BOUCHON REMPLISSAGE	
12	29946A80050	1	TAPON VACIADO	PLUG OIL DRAIN	BOUCHON DE VIDANGE	
13	09160-18018	1	ARANDELA PLANA	WASHER	RONDELLE PLATE	
	29958A80050	1	ARANDELA JUNTA	WASHER	RONDELLE JOINT	
14	29947-83200	1	PROTECTOR TAPON	PROTECTOR OILDRAIN P	PROTECTEUR BOUCHON	
15	29530-80050	1	CARCASA DELANTERA	CASE TRANSFER FRONT	CARTER AVANT	
16	29535-80050	1	JUNTA DELANTERA	GASKET CASE FRONT	JOINT AVANT	
17	29540-80050	1	ASIENTO ESFERICO	SHEET	SIEGE ESPHERIQUE	
18	29527-80050	2	FIJA	PIN	GOND	
19	01107-08303	2	TORNILLO	BOLT	VIS	
20	01107-08403	3	TORNILLO	BOLT	VIS	
21	01107-08803	2	TORNILLO	BOLT	VIS	
22	08321B31086	7	ARANDELA	WASHER	RONDELLE	
23	08322-11083	7	ARANDELA	WASHER	RONDELLE	
24	29620-80700	1	SOPORTE TRANSF LD	BRACKET MOUNTING RH	SUPPORT TRANSF CD	
25	29630-80700	1	SOPORTE TRANSF LI	BRACKET MOUNTING LH	SUPPORT TRANSF CG	
26	01517-08203	8	TORNILLO	BOLT	VIS	
27	29650A83001	1	SOPORTE TRASERO LD	MOUNTING RH REAR	SUPPORT ARRIERE CD	
28	29610A83001	2	SOPORTE DELANT LD LI	MOUNTING RH FRONT LD	SUPPORT AVAN CG	
29	08321B31103	6	ARANDELA	WASHER	RONDELLE	
30	08310-11103	6	TUERCA	NUT	ECROU	
31	35152-00000	1	INTERRUPTOR 4X4	SWITCH 4X4	INTERRUPTEUR 4X4	
32	37610C80042	1	ANILLO TORICO	O RING	JOINT TORIQUE	
33	09405A35402	1	ABRAZADERA	CLAMP	ETRIER	
34	24759A78130	2	CLIP INTERRUPTOR	CLIP	CLIP INTERRUPTEUR	

FIG. 31

F - 02

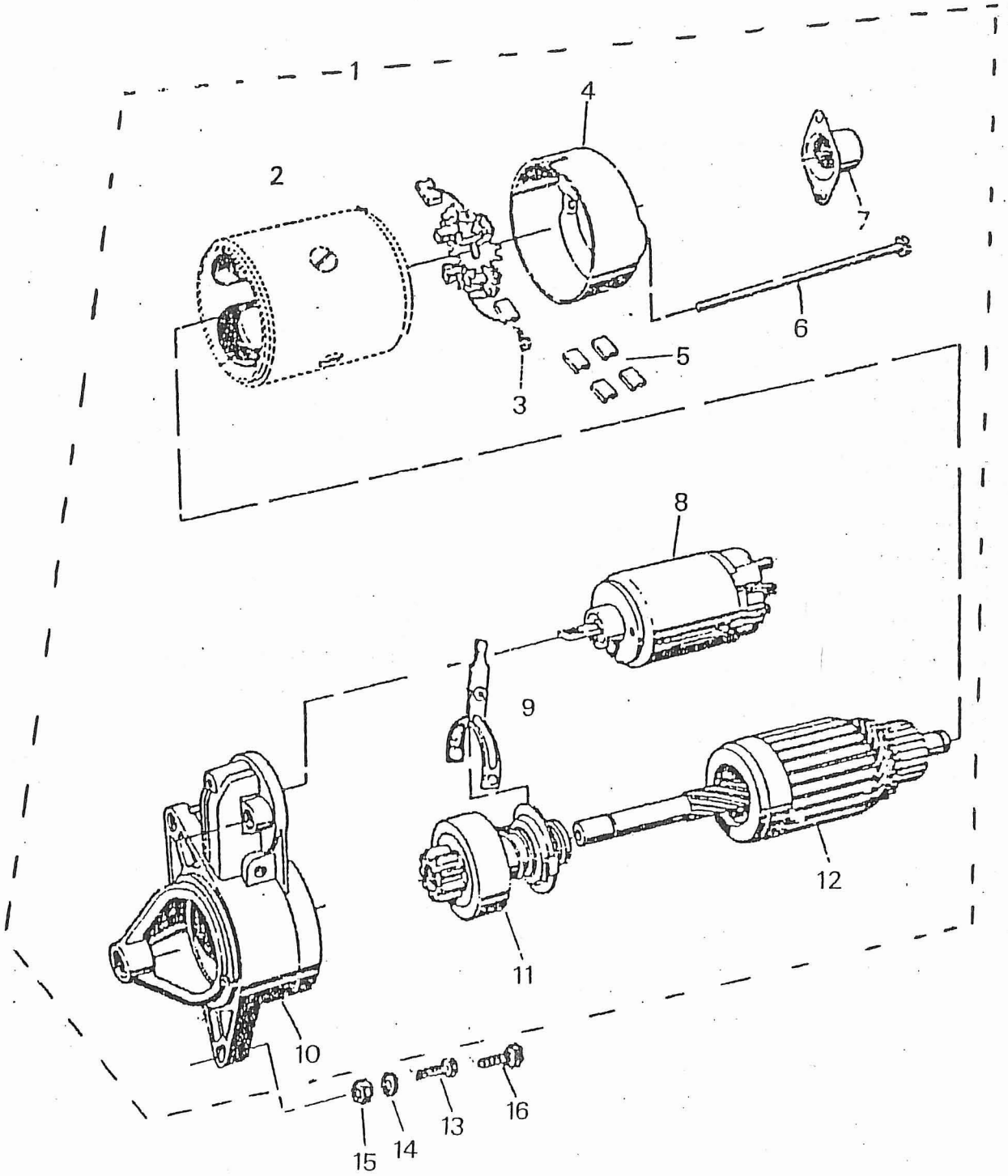

PUBLICACION N:A00523 GRUPO=CATAG SJ-413 SAMURAI SUBGRUPO=1F02M.ARRANQUE BOSCH
EDICION N: 3 GROUP=CATAG S-413 SAMURAI SUBGROUP=1F02MOTOR STARTING
GROUPE=CATAG SJ-413 SAMURAI SUBGROUPE=1F02DEMARREUR BOSCH

N.FIG PLATE N.FIG	N.PIEZA PARTNUMBER N.PIECE	CAN QTY OUT	DENOMINACION	DESCRIPTION	DENOMINATION	OBSERVACIONES
* 1	31100A83010	1	CONJ MOTOR ARRANQUE	MOTOR ASSY	ENS MOTEUR	BOSCH
2	00000A00459	1	CONJ INDUCTOR	YOKE ASSY	INDUCTEUR	
3	00000A00452	1	PORTA ESCOBILLAS	BRUSH HOLDER	PORTE BALAIS	
4	00000A00451	1	TAPA TRASERA	REAR COVER	COUVERCLE ARRIERE	
5	00000A00458	1	JUEGO ESCOBILLAS	BRUSH KIT	JEU BALAIS	
6	00000A00456	2	TIRANTE	ROD	TIGE	
7	00000A00453	1	CAPUCHON CIERRE	CAP LOCK	COUVERCLE	
8	00000A00457	1	CONTACTOR	RELAY	RELE	
9	00000A00447	1	HORQUILLA	FORK	FOURCHETTE	
10	00000A00446	1	SOPORTE DELANTERO	FRONT SUPPORT	SUPPORT AVANT	
11	00000A00445	1	PI/ON	CLUTCH ASSY	PIGNON	
12	00000A00444	1	INDUCIDO	ARMETURE	INDUIT	
13	01517-08306	1	TORNILLO	BOLT	VIS	
14	08321A31088	2	ARANDELA	WASHER	RONDELLE	
15	08310-11086	2	TUERCA	NUT	ECROU	
16	01517-08406	1	TORNILLO	BOLT	VIS	

* 1	31100B83010	1	CONJ. MOTOR ARRANQUE	MOTOR ASSY	ENS MOTEUR	LUCAS
	31100C83010	1	" " "	" "	" "	VALEO

FIG. 32-1

F - 03

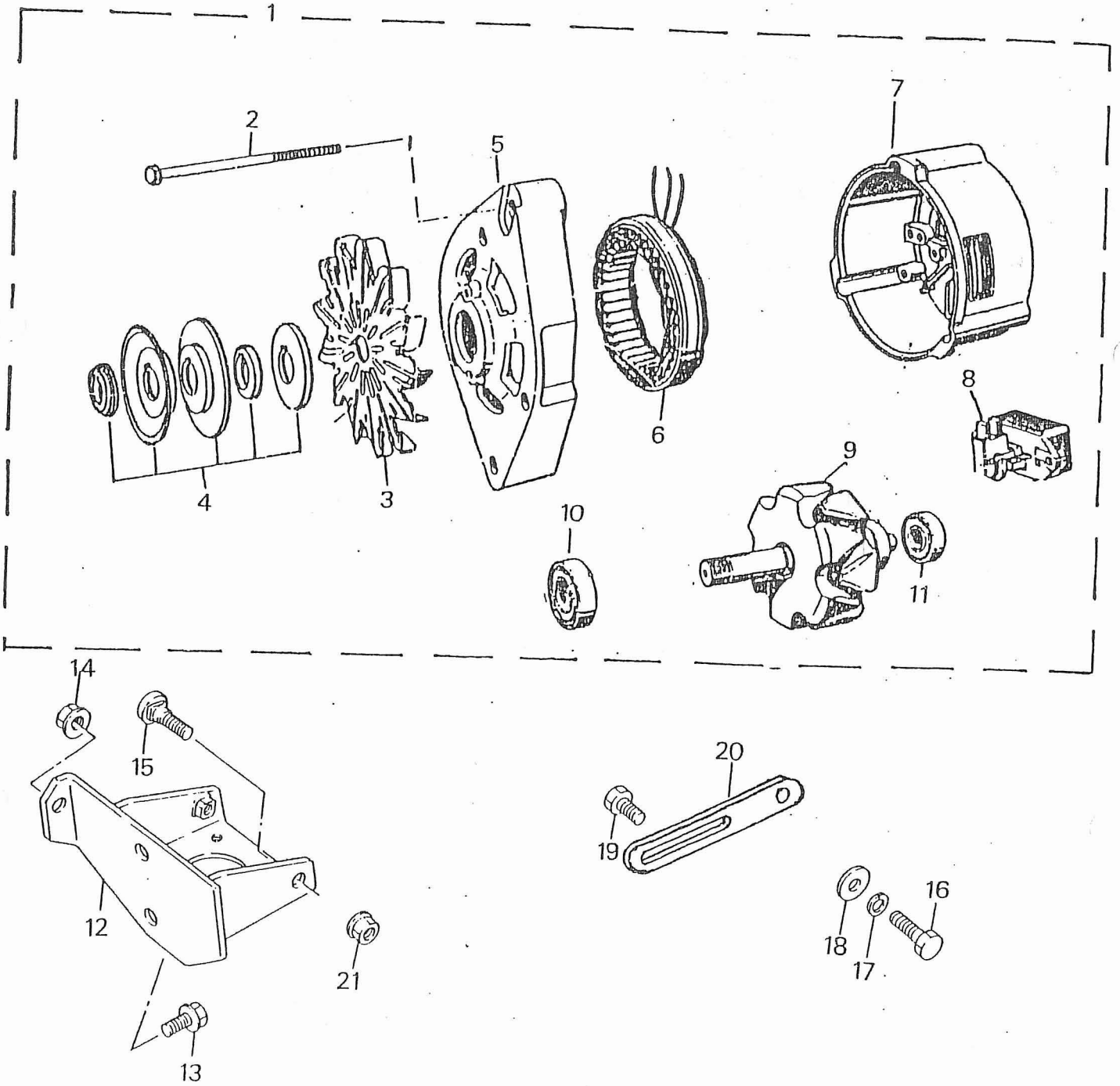

PUBLICACION N:A00523 GRUPO=CATAG SJ-413 SAMURAI SUBGRUPO=1F03ALTERNADOR BOSCH
EDICION N: 3 GROUP=CATAG S-413 SAMURAI SUBGROUP=1F03GENERATOR BOSCH
GROUPE=CATAG SJ-413 SAMURAI SUBGROUPE=1F03ALTERNAT.BOSCH

N.FIG PLATE N.FIG	N.PIEZA PARTNUMBER N.PIECE	CAN QTY OUT	DENOMINACION	DESCRIPTION	DENOMINATION	OBSERVACIONES
1	30003-00000	1	ALTERNADOR 45 A BOSC	ALTERNATOR 45A BOSCH	ALTERNAT 45A BOSCH	
2	00000A00504	4	TIRANTE	ROD	TIGE	
3	00000A00508	1	VENTILADOR	FAN	VENTILATEUR	
4	00000A00509	1	POLEA	PULLEY	POULIE	
5	00000A00494	1	TAPA DELANTERA	FRONT COVER	COUVERCLE AVANT	
6	00000A00503	1	ESTATOR	STATOR	STATOR	
7	00000A00499	1	TAPA TRASERA	REAR COVER	COUVERCLE ARRIERE	
8	00000A00502	1	REGULADOR	REGULATOR ASSY	REGULATEUR	
9	00000A00497	1	ROTOR	ROTOR ASSY	ROTEUR	
10	00000A00062	1	RODAMIENTO	REARING	ROULEMENT	
11	00000A00498	1	RODAMIENTO	REARING	ROULEMENT	
12	17910A82000	1	SOPORTE ALTERNADOR	BRACKET ALTERNATOR	SUPPORT ALTERNATEUR	
13	01107-08203	2	TORNILLO	COLT	VIS	
14	08316A16083	1	TUERCA	NUT	ECROU	
15	09107A08005	1	TORNILLO	BOLT	VIS	
16	01107-08253	1	TORNILLO	BOLT	VIS	
17	08321B31086	1	ARANDELA	WASHER	RONDELLE	
18	09160-08030	1	A PLANA	WASHER	RONDELLE PLATE	
19	01117-08203	1	TORNILLO	BOLT	VIS	
20	17921A82010	1	TENSOR	ARM ADJUSTER	TENDEUR	
21	08310-11083	1	TUERCA	NUT	ECROU	

FIG. 32

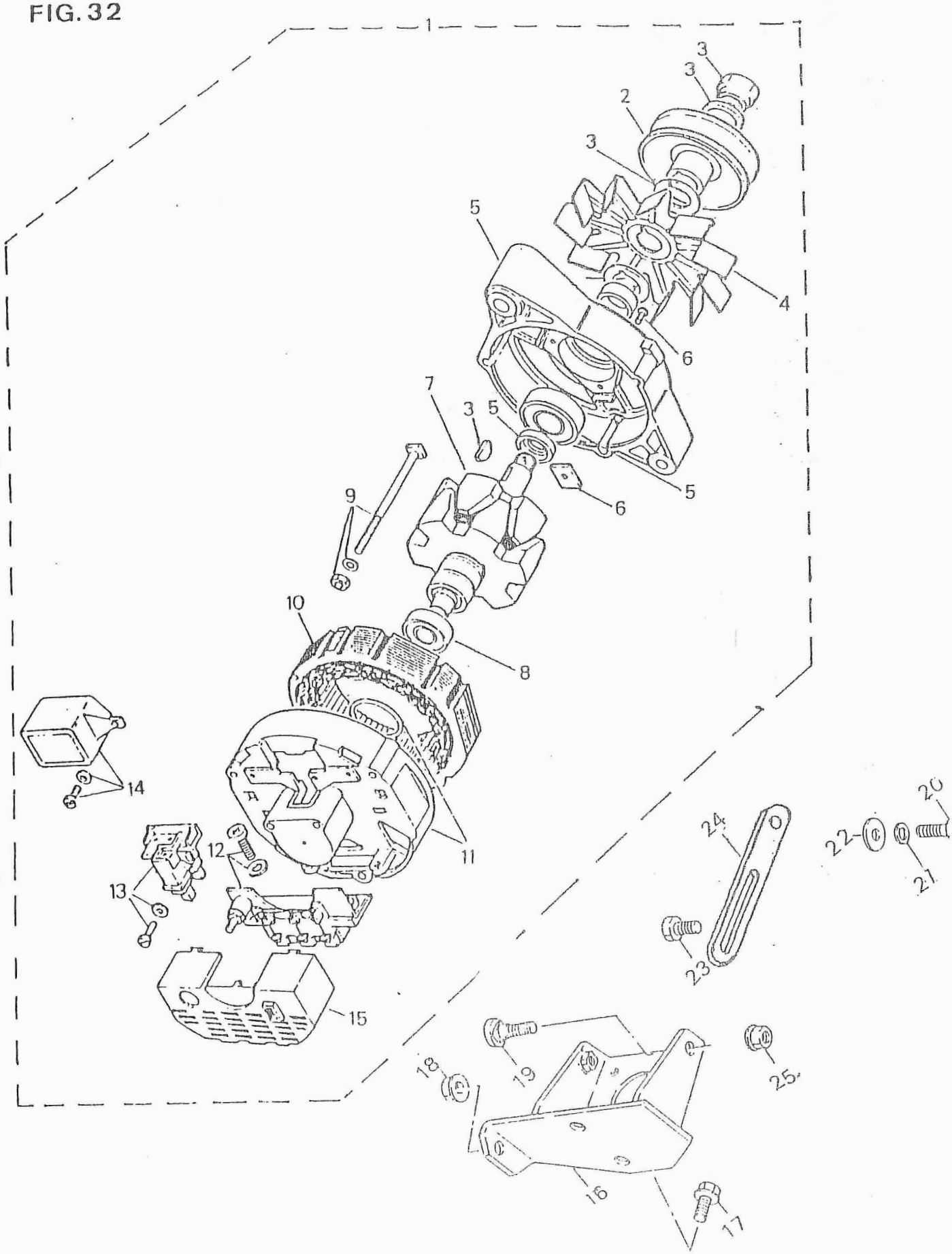

PUBLICACION N:A00523 GRUPO=CATAG SJ-413 SAMURAI SUBGRUPO=1F05ALTERNADOR VALEO
EDICION N: 3 GROUP=CATAG S-413 SAMURAI SUBGROUP=1F05GENERAT.VALEO
GROUPE=CATAG SJ-413 SAMURAI SUBGROUPE=1F05ALTERNAT.VALEO

N.FIG PLATE N.FIG	N.PIEZA PARTNUMBER N.PIECE	CAN QTY OUT	DENOMINACION	DESCRIPTION	DENOMINATION	OBSERVACIONES
1	30005-00000	1	ALTERNADOR 45A VALEO	ALTERNATOR ASSY 45A	ALTERNATEUR 45A	
2	00000A00325	1	POLEA	PULLEY	POULIE	
3	00000A00327	1	FIJACION POLEA-VENT	PULLEY-FAN MOUNTING	FIXATION POULIE-VENT	
4	00000A00326	1	VENTILADOR	FAN	VENTILATEUR	
5	00000A00322	1	TAPA DELANTERA	FRONT HOUSING ASSY	FLASQUE AVANT COMPLE	
6	00000A00323	1	FIJACION RODAMIENTO	FRONT BEARING MOUNT	FIX ROULEMENT AVANT	
7	00000A00319	1	ROTOR COMPLELTO	ROTOR ASSY	ROTOR COMPLET	
8	00000A00320	1	RODAMIENTO TRASERO	REAR BEARING	ROULEMENT ARRIERE	
9	00000A00324	1	JUEGO DE TIRANTES	SET OF THRU-BOLT	JEU DE TIRANTS	
10	00000A00321	1	STATOR	STATOR	STATOR	
11	00000A00318	1	TAPA TRASERA COMPLET	REAR HOUSING ASSY	FLASQUE ARRIERE COMP	
12	00000A00317	1	DIODOS COMPLETOS	DIODE BRIDGE ASSY	PONT DE DIODES COMPL	
13	00000A00315	1	PORTA ESCOBILLAS	BRUSH HOLDER ASSY	PORTE BALAIS	
14	00000A00314	1	REGULADOR COMPLETO	REGULATOR ASSY	REGULATEUR COMPLET	
15	00000A00316	1	TAPA TRASERA	REAR COVER ASSY	COUVERCLE ARRIERE	
16	17910A82000	1	SOPORTE ALTERNADOR	BRACKET ALTERNATOR	SUPPORT ALTERNATEUR	
17	01107-08203	2	TORNILLO	BOLT	VIS	
18	08316A16083	1	TUERCA	NUT	ECROU	
19	09107A08005	1	TORNILLO	BOLT	VIS	
20	01107-08253	1	TORNILLO	BOLT	VIS	
21	08321B31086	1	ARANDELA	WASHER	RONDELLE	
22	09160-08030	1	A PLANA	WASHER	RONDELLE	
23	01117-08203	3	TORNILLO	BOLT	VIS	
24	17921A82010	1	TENSOR	ARM ADJUSTER	TENDEUR	
25	08310-11083	1	TUERCA	NUT	ECROU	

F - 04

FIG.33

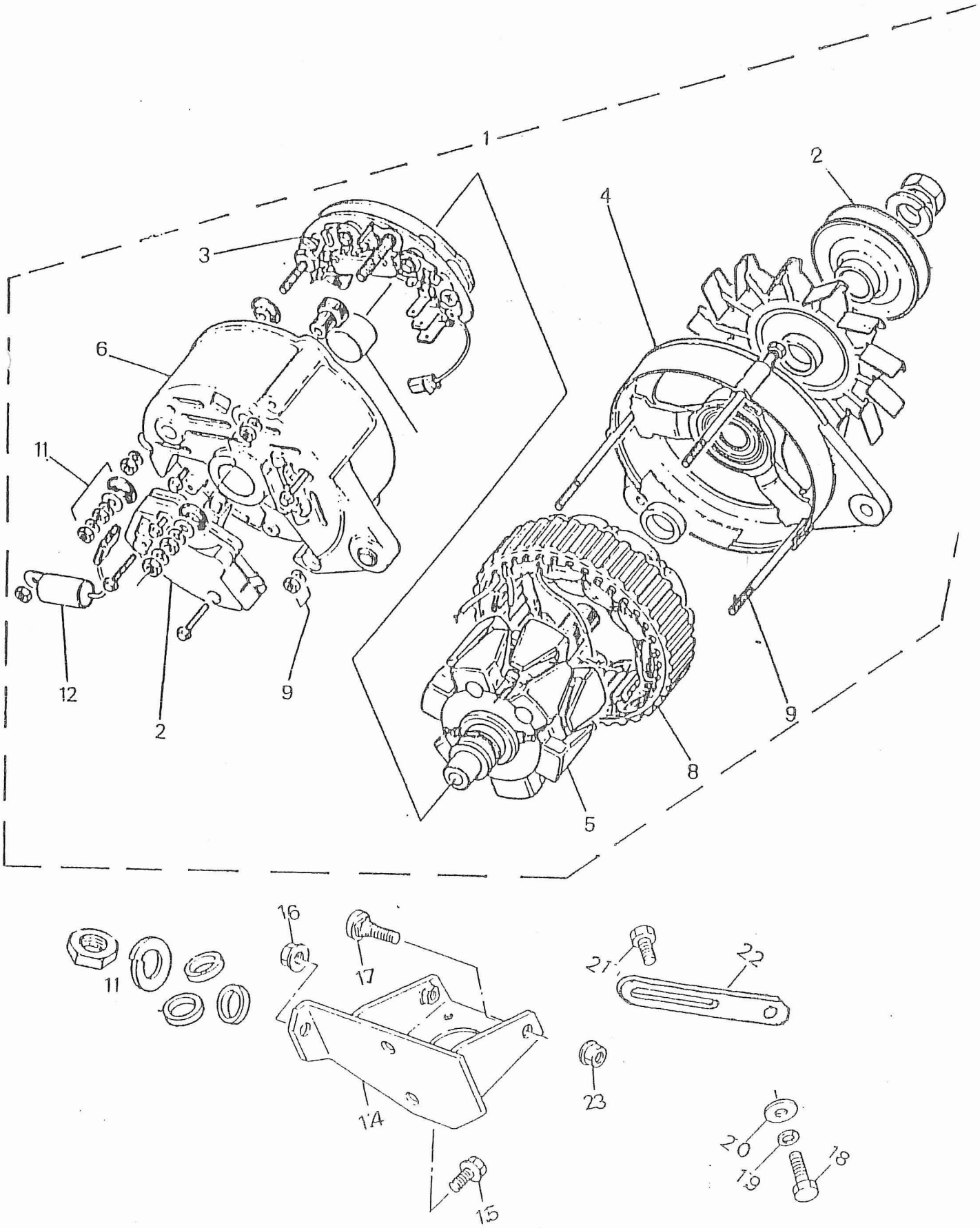

PUBLICACION N:A00523 GRUPO=CATAG SJ-413 SAMURAI SUBGRUPO=1F04ALTERNADOR LUCAS
EDICION N: 3 GROUP=CATAG S-413 SAMURAI SUBGROUP=1F04GENERATOR LUCAS
GROUPE=CATAG SJ-413 SAMURAI SUBGROUPE=1F04ALTERNAT.LUCAS

N.FIG PLATE N.FIG	N.PIEZA PARTNUMBER N.PIECE	CAN QTY OUT	DENOMINACION	DESCRIPTION	DENOMINATION	OBSERVACIONES
1	30006-00000	1	ALTERNADOR S POLEA	ALTERNATOR NOT PULLE	ALTERNATEUR S/POULIE	D 31481
2	00000A00424	1	REGULADOR Y CAJA ESC	REGULATOR & BOX BRUS	REGULATEUR ET BOITE	
3	00000A00425	1	RECTIFICADOR	RECTIFIER	RECTIFICATEUR	
4	00000A00426	1	SOPORTE DELANTERO	BRACKET FRONT	SUPPORT AVANT	
5	00000A00427	1	ROTOR	ROTOR ASSY	ROTOR	
6	00000A00428	1	SOPORTE TRASERO	BRACKET REAR	SUPPORT ARRIERE	
7	00000A00429	1	CASQUILLO	BUSH	BAGUE	
8	00000A00430	1	INDUCIDO	STATOR	INOUIT	
9	00000A00431	1	JUEGO TORNILLOS-ARAN	THRDUGTH BOLT KIT	JEU VIS-RONDELLE-RES	
10	00000A00432	1	JUEGO ARANDELAS-CASQ	WASHES-SPACING KIT	JEU VIS-BAGUE	
11	00000A00433	1	JUEGO TERMINAL	KIT TERMINAL	JEU TERMINAL	
12	00000A00434	1	CONDENSADOR	SUSPRESSION CAPACITA	CONDENSATEUR	
13	00000A00435	1	POLEA ALTERNADOR	PULLEY	POULIE	
14	17910A82000	1	SOPORTE ALTERNADOR	BRACKET ALTERNATOR	SUPPORT ALTERNATEUR	
15	01517-08203	2	TORNILLO	BOLT	VIS	
16	08316A16083	1	TUERCA	NUT	ECROU	
17	09107A08005	1	TORNILLO	BOLT	VIS	
18	01107-08253	1	TORNILLO	BOLT	VIS	
19	08321B31086	1	ARANDELA	WASHER	RONDELLE	
20	09160-08030	1	A PLANA	WASHER	RONDELLE	
21	01117-08203	3	TORNILLO	BOLT	VIS	
22	17921A82010	1	TENSOR	ARM ADJUSTER	TENDEUR	
23	08310-11083	1	TUERCA	NUT	ECROU	

FIG.34

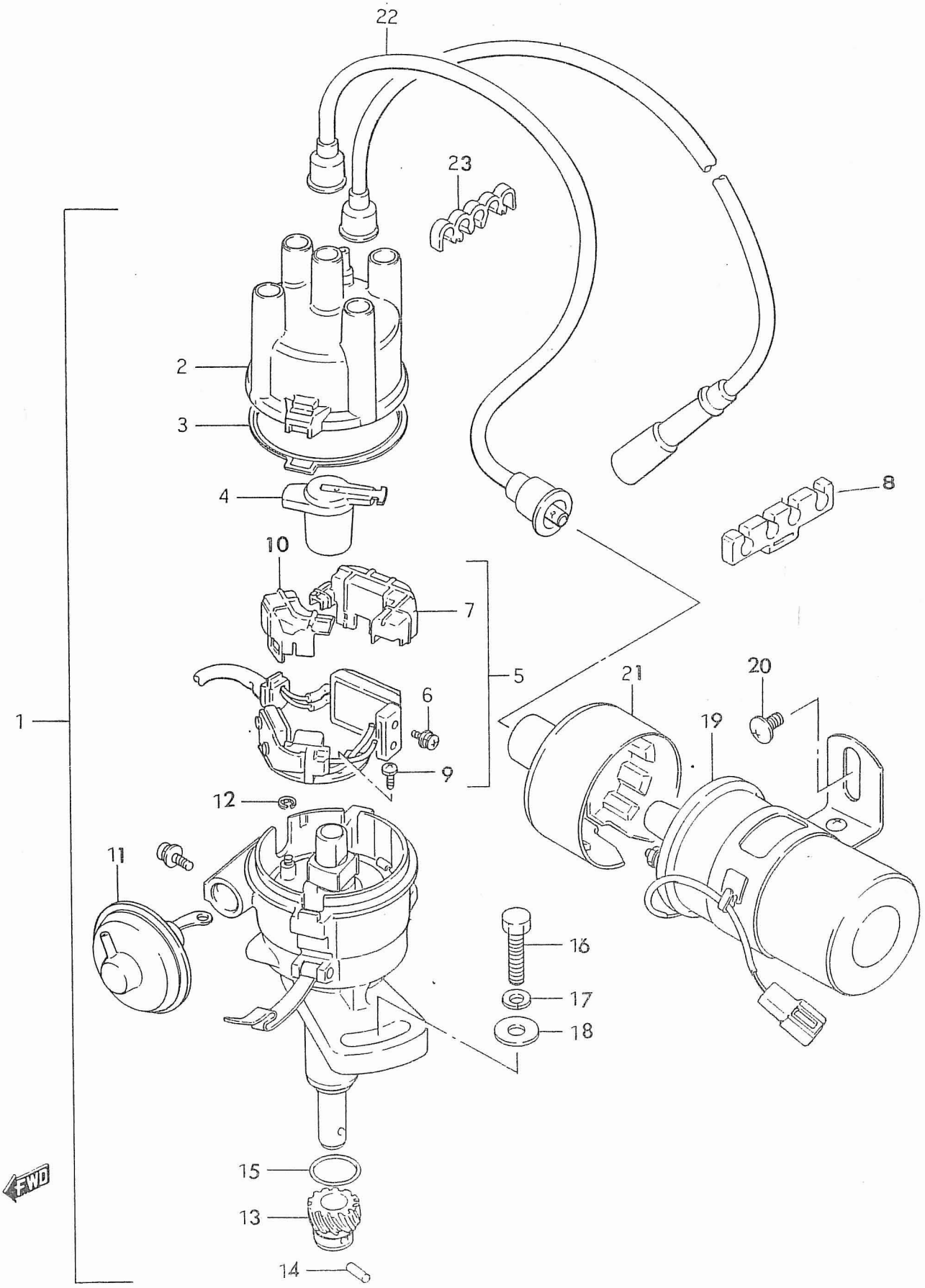

PUBLICACION N:A00523 GRUPO=CATAG SJ-413 SAMURAI SUBGRUPO=1F06DISTRIBUIDOR
EDICION N: 3 GROUP=CATAG S-413 SAMURAI SUBGROUP=1F06DISTRIBUTOR ASSY
GROUPE=CATAG SJ-413 SAMURAI SUBGROUPE=1F06ALLUMEUR

N.FIG PLATE N.FIG	N.PIEZA PARTNUMBER N.PIECE	CAN QTY OUT	DENOMINACION	DESCRIPTION	DENOMINATION	OBSERVACIONES
1	33100-83021	1	CONJ DISTRIBUIDOR	DISTRIBUTOR ASSY	DISTRIBUTEUR	
2	33321-75110	1	TAPA DISTRIBUIDOR	COVER DISTRIBUTOR	COUVER.DISTRIBUITOR	
3	33324-79610	1	JUNTA TAPA	SEAL CAP	JONT COUVERCLE	
4	33310-82110	1	ROTOR	ROTOR ASSY	ROTOR	
5	33370-83011	1	CONJ ENCENDIDO	IGNITER ASSY	ENS ALLUMAGE	
6	33152-82010	2	TORNILLO	SCREW	VIS	
7	33297-81060	1	TAPA ENCENDIDO	COVER IGNITER	COUVERCLE ALLUMAGE	
8	33883-83020	1	ABRAZADERA	CLAMP	ETRIER	
9	33151-80020	2	TORNILLO	SCREW	VIS	
10	33279-80020	1	TAPA GENERADOR	COVER GENERATOR	COUVERCLE GENERATEUR	
11	33230-83020	1	UNIDAD DE VACIO	CONTROLLER ASSY VACU	AVANCE AUTOMATIQUE	
12	33239-76410	1	ANILLO ELASTICO	ERING	CIRCLIP	
13	33267-83010	1	ENGRANAJE	GEAR	ENGRENAGE	
14	33268-83010	1	PASADOR	PIN	CLAVETTE	
15	33278-52010	1	ANILLO TORICO	O RING	JOINT TORIQUE	
16	09100-08158	1	TORNILLO	SCREW	VIS	
17	08321B31086	1	ARANDELA	WASHER	RONDELLE	
18	09160-08030	1	ARANDELA	WASHER	RONDELLE	
19	33410-83010	1	BOBINA ENCENDIDO	COIL ASSY IGNITION	BOBINE ALLUMAGE	
20	02142-06106	1	T/RNILLO	SCREW	VIS	
21	33471-77011	1	TAPA BOBINA	CAP COIL	COUVERCLE BOBINE	
22	33700-83030	1	COJ CABLE DE ALTA	CABLES ASSY	ENS CABLES	
	33710-83010	1	CABLE BOBINA-DISTRIB	CABLE COIL-DISTRIB.	CABLE BOBINA-DISTRIB	
	33730-60A10	1	CABLE CIL. N1	CABLE CYL. N1	CABLE CIL.N1	
	33740-60A10	1	CABLE CIL.,N2	CABLE CYL.N2	CABLE CIL.N2	
	33750-60A10	1	CABLE CIL. N3	CABLE CYL. N3	CABLE CIL.N3	
	33760-60A10	1	CABLE CIL N4	CABLE CYL. N4	CABLE CIL. N4	
23	33883-63200	1	ABRAZADERA	CLAMP	ETRIER	

FIG.35

F - 07

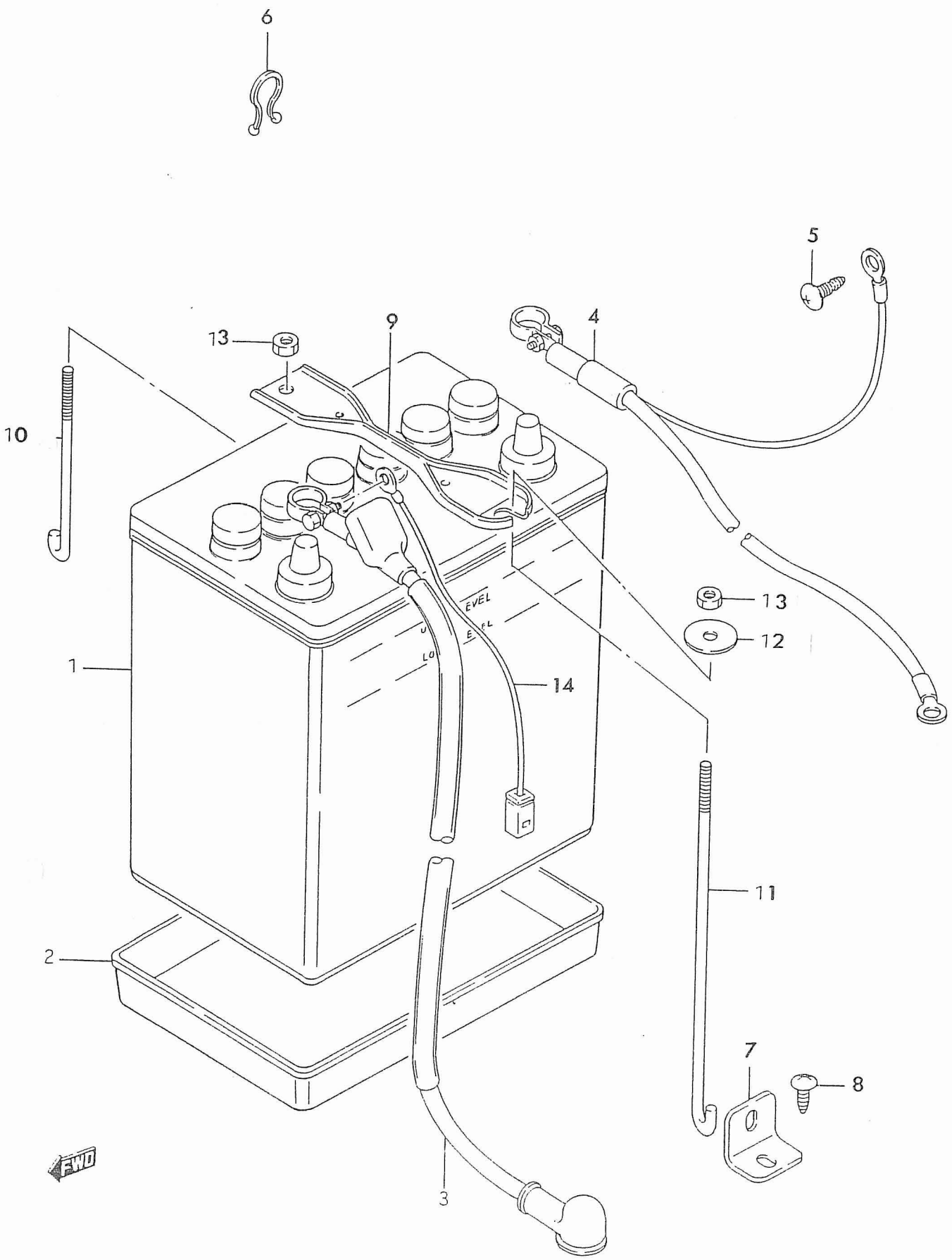

PUBLICACION N:A00523 GRUPO=CATAG SJ-413 SAMURAI SUBGRUPO=1F07BATERIA
EDICION N: 3 GROUP=CATAG S-413 SAMURAI SUBGROUP=1F07BATTERY
GROUPE=CATAG SJ-413 SAMURAI SUBGROUPE=1F07BATTERIE

N.FIG PLATE N.FIG	N.PIEZA PARTNUMBER N.PIECE	CAN QTY OUT	DENOMINACION	DESCRIPTION	DENOMINATION	OBSERVACIONES
1	33610A80021	1	BATERIA	BATTERY	BATTERIE FEMSA	
	33610B80021	1	BATERIA	BATTERY	BATTERIE TUDOR	
2	33661A51020	1	BANDEJA BATERIA	TRAY BATTERY	PLATEAU BATTERIE	
3	33800A70A00	1	CABLE MOTOR ARRANQUE	CABLE STARTING	CABLE DEMARRAGE	
4	33850A70A00	1	CABLE MASA	CABLE BATTERY	CABLE MASSE	
5	09129-06002	1	TORNILLO	SCREW	VIS	
6	09408-00012	1	ABRAZADERA	CLAMP	ETRIER	
7	72525-80001	1	SOPORTE TORNILLO	STAY BATTERY BOLT	SUPPORT VIS BATERIE	H CHASIS 67931
8	02142-06106	1	TORNILLO	SCREW	VIS	H CHASIS 67931
9	72511A78000	1	BANDA BATERIA	BAND BATTERY	BANDE BATTERIE	
10	72521-80000	1	TORNILLO BATERIA	BOLT BATTERY	VIS BATTERIE	
11	63461-70400	1	TORNILLO BATERIA	BOLT BATTERY	VIS BATTERIE	
12	09160-05013	1	ARANDELA	WASHER	RONDELLE	
13	08310-11056	2	TUERCA	NUT	ECROU	
14	36740A80000	1	CABLE FUSIBLE PRAL	CABLE FUS	CABLE FUSE	

FIG. 36

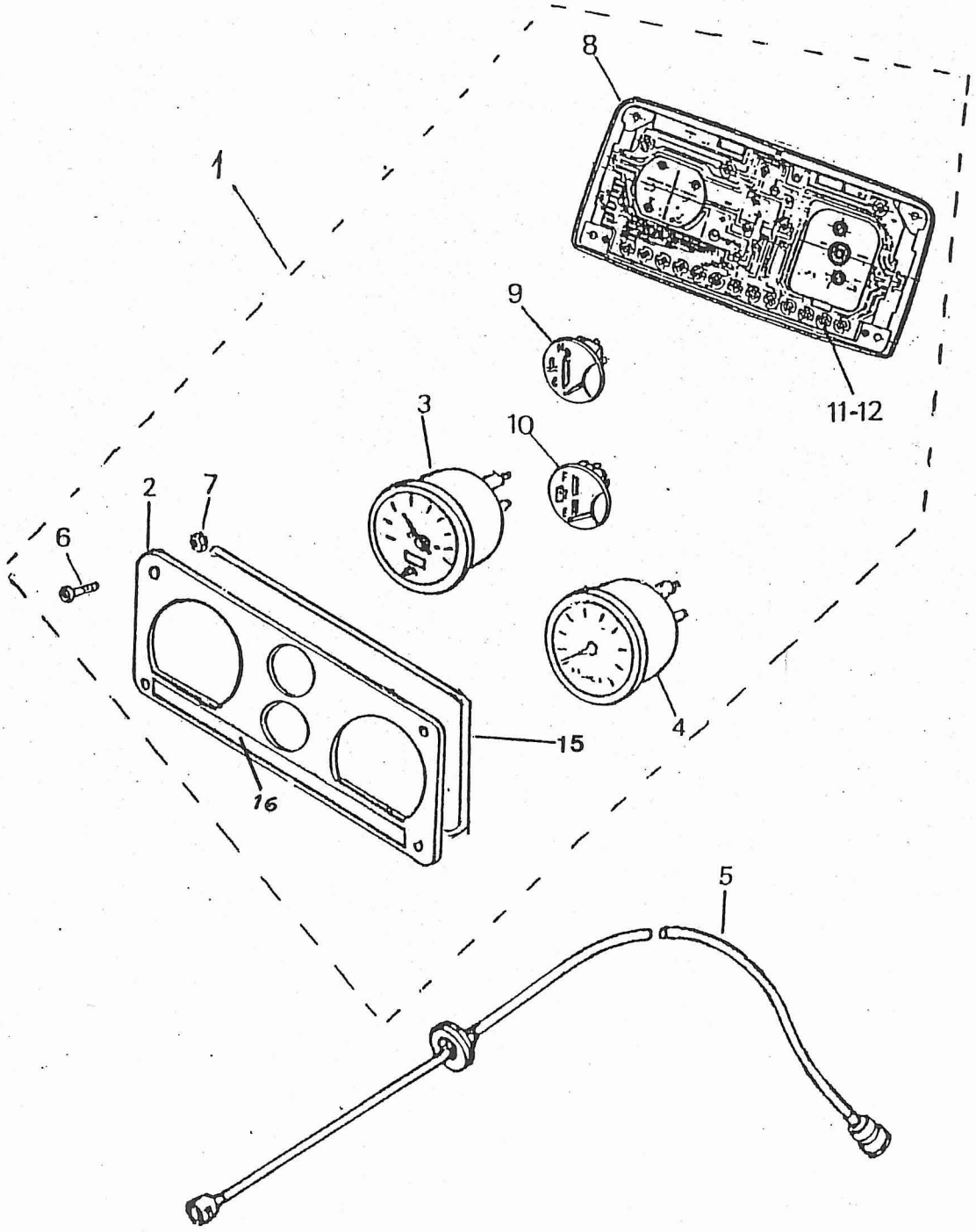

PUBLICACION N:A00523 GRUPO=CATAG SJ-413 SAMURAI SUBGRUPO=1F08PANEL INSTRUMENT
EDICION N: 3 GROUP=CATAG S-413 SAMURAI SUBGROUP=1F08SPEEDOMETER
GROUPE=CATAG SJ-413 SAMURAI SUBGROUPE=1F08PANNEAU INSTRUM.

N.FIG PLATE N.FIG	N.PIEZA PARTNUMBER N.PIECE	CAN QTY OUT	DENOMINACION	DESCRIPTION	DENOMINATION	OBSERVACIONES
1	34100A71A00	1	C/PANEL INSTRUMENTOS	PANEL ASSY INSTRUMEN	PANNEAU INSTRUMENTS	U.K.
	34100A71A50	1	PANEL INSTRUMENTOS	SPEEDOMETER ASSY	PANNEAU INSTRUMENTS	
2	00000A00547	1	TAPA PANEL	COVER PANEL	COUVERCLE	
3	00000A00541	1	VELOCIMETRO	SPEEDOMETER	COMPTER VITESSE	
4	00000A00540	1	CUENTA-REVOLUCIONES	COUNTER SPEEDEMETER	COMPTE TOURS	
5	34910A80030	1	CABLE VELOCIMETRO	CABLE SPEEDOMETER	CABLE COMPTE-TOURS	
6	03121-05165	2	TORNILLO	SCREW	VIS	
7	09148-05019	2	TUERCA	NUT	ECROU	
8	00000A00544	1	CIRCUITO IMPRESO	PLATE PRINT	CIRCUIT IMPRIME	
9	00000A00542	1	INDICAD TEMPERATURA	THERMOMETER	INDICATEUR TEMP.	
10	00000A00543	1	INDIC COPMBUSTIBLE	FUEL METER	INDIC. CARBURANT	
11	00000A00546	1	PORTALAMPARAS 2W	SOCKET 2 W	PORTE LAMPE 2 W	
12	00000A00545	16	PORTALAMPARAS 1,2 W	SOCKET 1,2 W	PORTE LAMPE 1,2 W	
13	03141-05165	2	TORNILLO	SCREW	VIS	
14	09148A50005	2	TUERCA	NUT	ECROU	
15	00000A00635	1	CRISTAL	GLASS	VITRE	
16	00000A00661	1	REGLETA	LEAD	REGLET	

FIG. 37

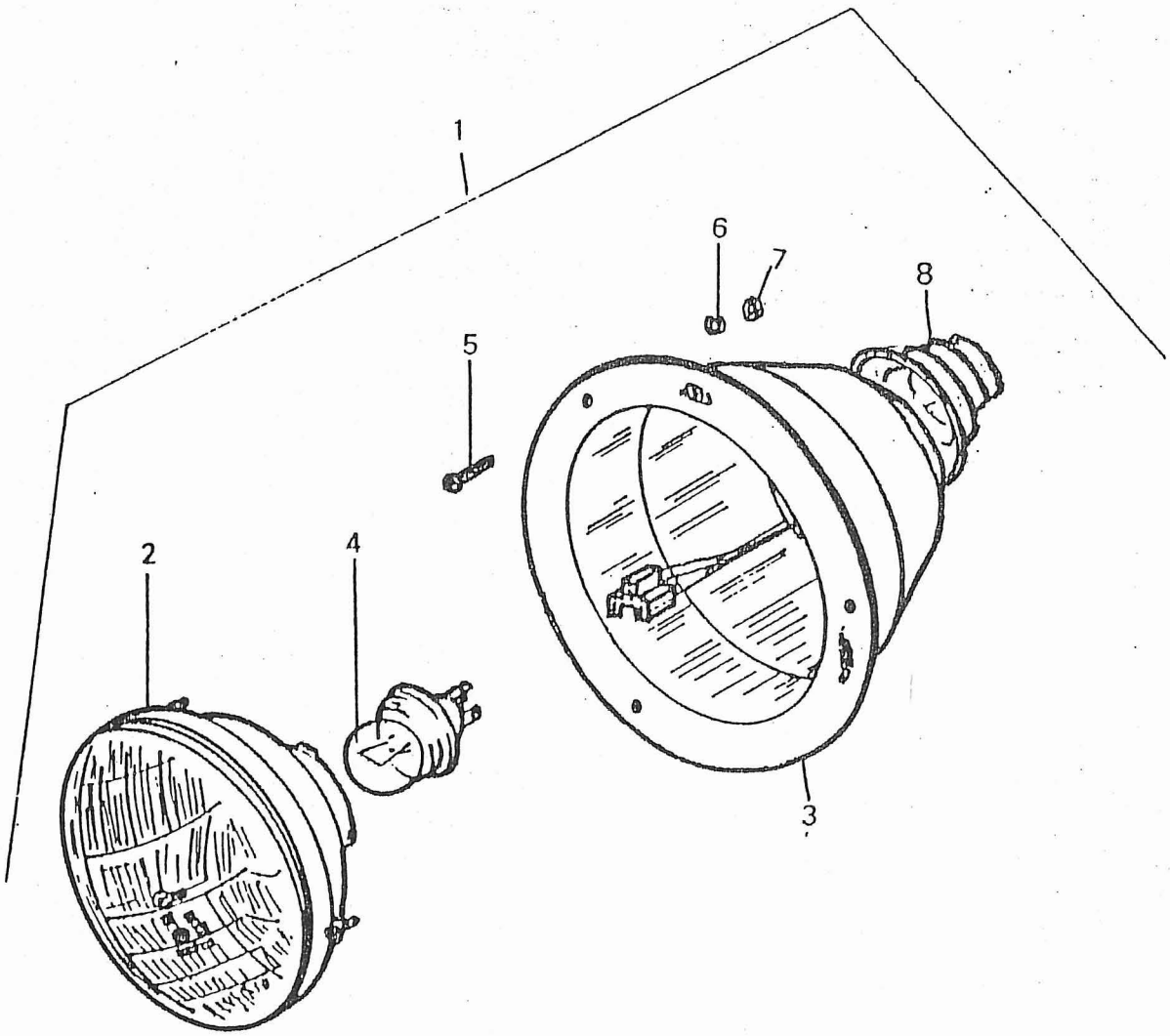

PUBLICACION N:A00523 GRUPO=CATAG SJ-413 SAMURAI SUBGRUPO=1F09FARO DELANTERO
EDICION N: 3 GROUP=CATAG S-413 SAMURAI SUBGROUP=1F09HEAD LAMP FRONT
GROUPE=CATAG SJ-413 SAMURAI SUBGROUPE=1F09PROJECTEUR AV.

N.FIG PLATE N.FIG	N.PIEZA PARTNUMBER N.PIECE	CAN QTY OUT	DENOMINACION	DESCRIPTION	DENOMINATION	OBSERVACIONES
1	35100B79000	2	FARO PRINCIPAL	HEAD LAMP ASSY SJ413	HEAD LAMP ASSY	
	35191-00000	2	FARO PRINCIPAL	HEAD LAMP ASSY	04FRANCIA	FRANCIA
2	00000A00472	2	BLOQUE OPTICO	LIGHT UNIT	BLOQUE OPTIQUE	
3	00000A00484	2	CARCASA FARO	HOUSING	LOGEMENT	
4	00000A00096	2	LAMPARA 12 V 45 W	BULB 12 V 45/40W	LAMPE 12 V 45/40W	
	00000A00243	2	LAMPARA AMARILLA	LAMP AMBAR	LAMPE JAUNE	
5	02112-05356	6	TORNILLO	SCREW	VIS	
6	08321A31056	6	A GROWER	WASHER	RONDELLE	
7	08310-11056	6	ARANDELA	WASHER	RONDELLE	
8	00000A00485	2	CUBIERTA GOMA	RUBBER COVER	ENJOLIVEUR CAOUTC.	

FIG. 38

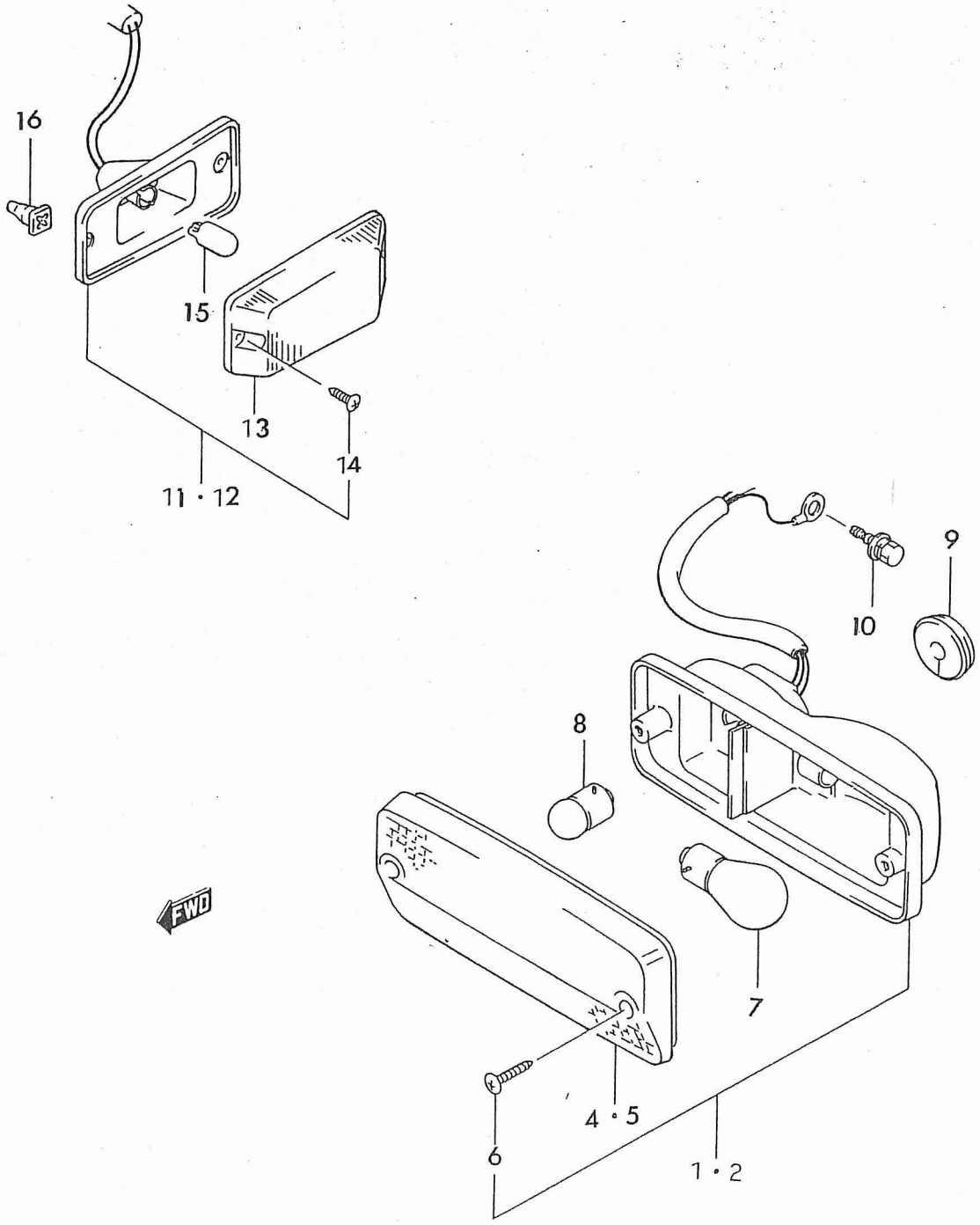

PUBLICACION N:A00523 GRUPO=CATAG SJ-413 SAMURAI SUBGRUPO=1F10PILOTOS DELANTER
EDICION N: 3 GROUP=CATAG S-413 SAMURAI SUBGROUP=1F10FRONT LAMP
GROUPE=CATAG SJ-413 SAMURAI SUBGROUPE=1F10FEUX AVANT

N.FIG PLATE N.FIG	N.PIEZA PARTNUMBER N.PIECE	CAN QTY OUT	DENOMINACION	DESCRIPTION	DENOMINATION	OBSERVACIONES
1	35601A80032	1	CONJ INTERM DEL LD	LAMP ASSY RH	ENS CLIGNOTANT CD	H 72080
	35601C80032	1	CONJ.INTERM.DEL LD	LAMP ASSY RH	ENS CLIGNOTANT CD	D 72081
2	35602A80032	1	CONJ INTERMIT DEL LI	LAMP ASSY LH	ENS CLIGNOTANT CG	H 72080
	35602C80032	1	CONJ.INTERM. DEL LI	LAMP ASSY LH	ENS CLIGNOTANT CG	D 72081
3	00000A00100	1	CABLES	CABLE	CABLE	
4	00000A00098	1	TRANSPARENCIA LD	PLASTIC RH	PLASTIQUECD	
5	00000A00097	1	TRANSPARENCIA LI	PLASTIC LH	PLASTIQUE CG	
6	00000A00099	2	TORNILLO	SCREW	VIS	
7	00000A00101	1	LAMPARA 12V 21W	BULB P25-1	LAMPE 12V 21W	
8	00000A00102	1	LAMPARA 12V 5W	BULB R19-5	LAMPE 12V 5W	
9	09308-08007	2	PASACABLE	GROMMET	RAISIN CABLE	
10	09115-06001	2	TORNILLO	SCREW	VIS	
11	36410-70A00	1	PILOTO INTERMI LD	LAMP SIDE SIGNAL RH	CLIGNOTENT CD	
12	36430-70A00	1	PILOTO INTERM LI	LAMP SIDE SIGNAL LH	CLIGNOTANT CG	
13	36412-78400	2	PLASTICO INTERMIT	PLASTIC	PLASTIQUE	
14	03112-04169	1	TORNILLO	SCREW	VIS	
15	00000A00148	2	LAMPARA	BULBO	LAMPE	
16	09159-04004	4	TUERCA	NUT	ECROU	

FIG. 39

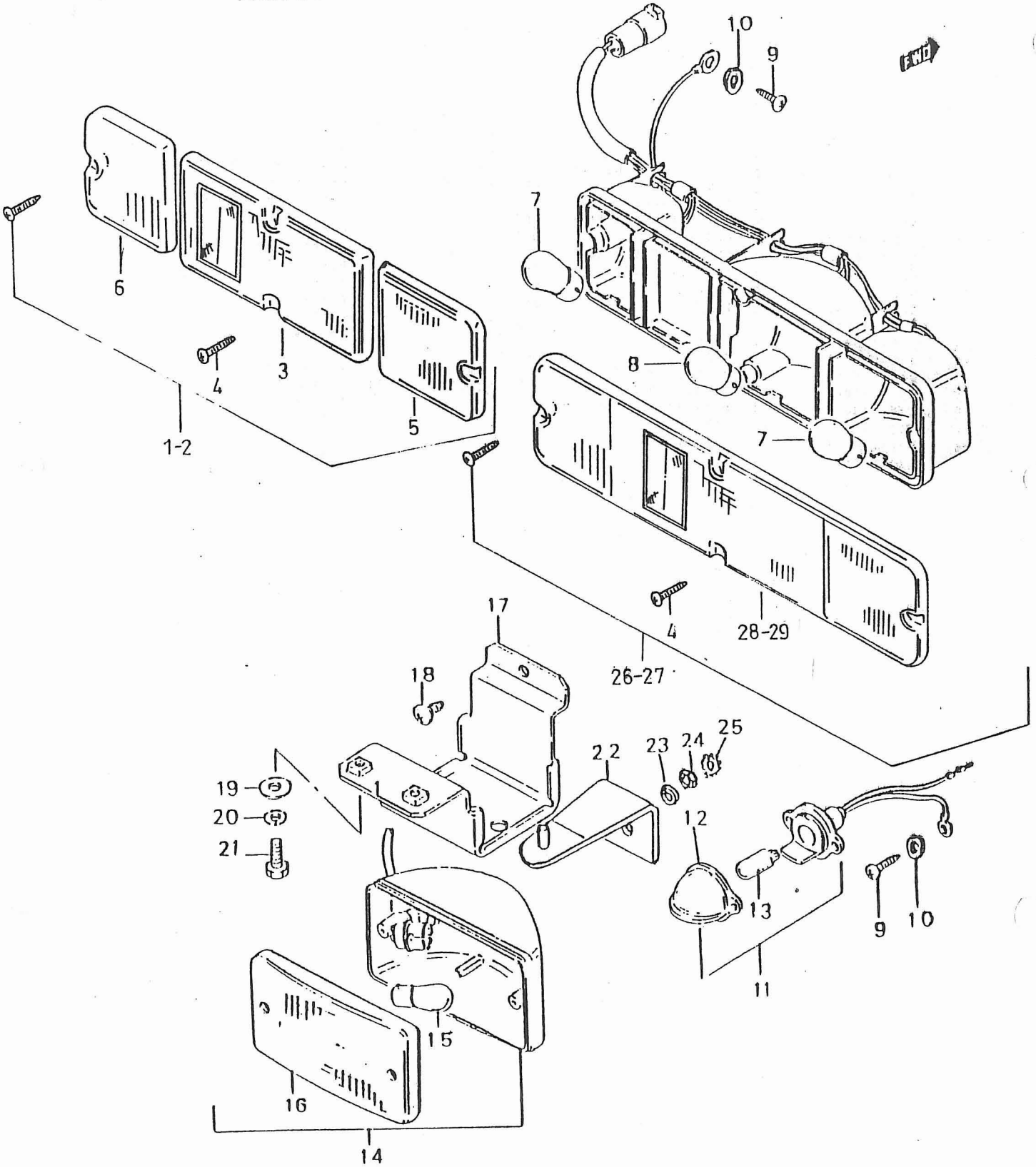
10
9
FWD
7
6
3
4
5
1-2
8
7
4
28-29
26-27
17
18
22
23
24
25
19
20
21
12
13
9
10
11
15
16
14

PUBLICACION Nº A00523 | GRUPO-CATAG. SJ-413 SAMURAI | SUBGRUPO-F11 PILOTOS TRASEROS

EDICION Nº 3 BIS | GROUP-CATAG. SJ-413 SAMURAI | SUBGROUP-F11 REAR LAMP

GROUPE-CATAG. S-413 SAMURAI | SUBGROUPE-F11 FEUX ARRIERE

Nº FIG.	Nº PIEZA	CANT.	DENOMINACION	DESCRIPTION	DENOMINATION	OBSERVACIONES
1	35603A80012	1	PILOTO INTERM. TRA LD	LAMP. REAR RH	CLIHNOTANT CD	H72080
	35603B80012	1	PILOTO INTERM. TRA L	REAR LAMP RH	CLIGNOTANT CD	D72081
2	35604A80012	1	PILOTO INTERM. TRA LD	LAMP REAR LH	CLIGNOTANT CG	H72080
	35604B80012	1	PILOTO INTERM. TRA LI	REAR LAMP LH	CLIGNOTANT CG	D72081
3	00000A00103	1	TRANSPAREN ROJA LI	PLASTIC RED LH	PLASTIQUE ROUGE CG	H79994
	00000A00105	1	TRANSPAREN ROJA LD	PLASTIC RED RH	PLASTIQUE ROUGE CD	H79994
4	00000A00104	8	TORNILLO	SCREW	VIS	
5	00000A00106	2	TRANSPARENCIA AMBAR	LENS	PLASTIQUE AMBRE	H79994
6	00000A00107	2	TRANSPARENCIA INCOLO	LENS	PLASTIQUE INCOLORE	H79994
7	00000A00108	4	LAMPARA 12 V	BULB	LAMPE 12 V	
8	00000A00109	2	LAMPARA 12 V	BULB	LAMPE 12 V	
9	03111-05126	2	TORNILLO	SCREW	VIS	
10	08322-21056	2	ARANDELA	WASHER	RONDELLE	
11	35910B80011	2	LUZ MATRICULA	LAMP ASSY LICENCE	LAMPE IMMATRICUL	
12	00000A00149	2	PLASTICO	LENS	PLASTIQUE	
13	00000A00150	2	LAMPARA	BULB	LAMPE	
14	36570A79000	1	LUZ ANTINIEBLA TRAS.	LAMP ASSY READ FOG	FEU BROUILLARD	H CHASIS 79994
15	00000A00111	1	LAMPARA 12 V	BULB	LAMPE	H CHASIS 79994
16	00000A00110	1	TRANSPARENCIA PILOTO	LENS	PLASTIQUE	H CHASIS 79994
17	36580-80001	1	SOPORTE LUZ ANTINIEB.	SUPPORT	SUPPORT FEU ANTIB.	H CHASIS 79994
18	01104-06166	2	TORNILLO	SCREW	VIS	H CHASIS 79994
19	09160-06016	2	ARANDELA PLANA	PLAIN WASHER	RONDELLE PLANE	H CHASIS 79994
20	08321A31066	2	ARANDELA GROWER	GROWER WASHER	RONDELLE GROWER	H CHASIS 79994
21	03141-06126	1	TORNILLO	SCREW	VIS	H CHASIS 79994
22	36570C79000	1	SOPORTE PILOTO	SUPPORT	SUPPORT	H CHASIS 79994
23	08310-11086	1	TUERCA	NUT	ECROU	H CHASIS 79994
24	02005-00000	1	A. MUELLE	WASHER	RONDELLE RESSORT	H CHASIS 79994
25	02007-00000	1	A. ESTRELLA	WASHER	RONDELLE	H CHASIS 79994
26	35243-00000	1	CONJ. PILOTO TRAS L/D	C.		D CHASIS 79995
27	35244-00000	1	CONJ. PILOTO TRAS L/I			D CHASIS 79995
28	00000A00694	1	TRANSPARENCIA L/I	PLASTIC L/I	PLASTIQUE CG	D CHASIS 79995
29	00000A00695	1	TRANSPARENCIA L/D	PLASTIC L/D	PLASTIQUE CD	D CHASIS 79995

FIG.40

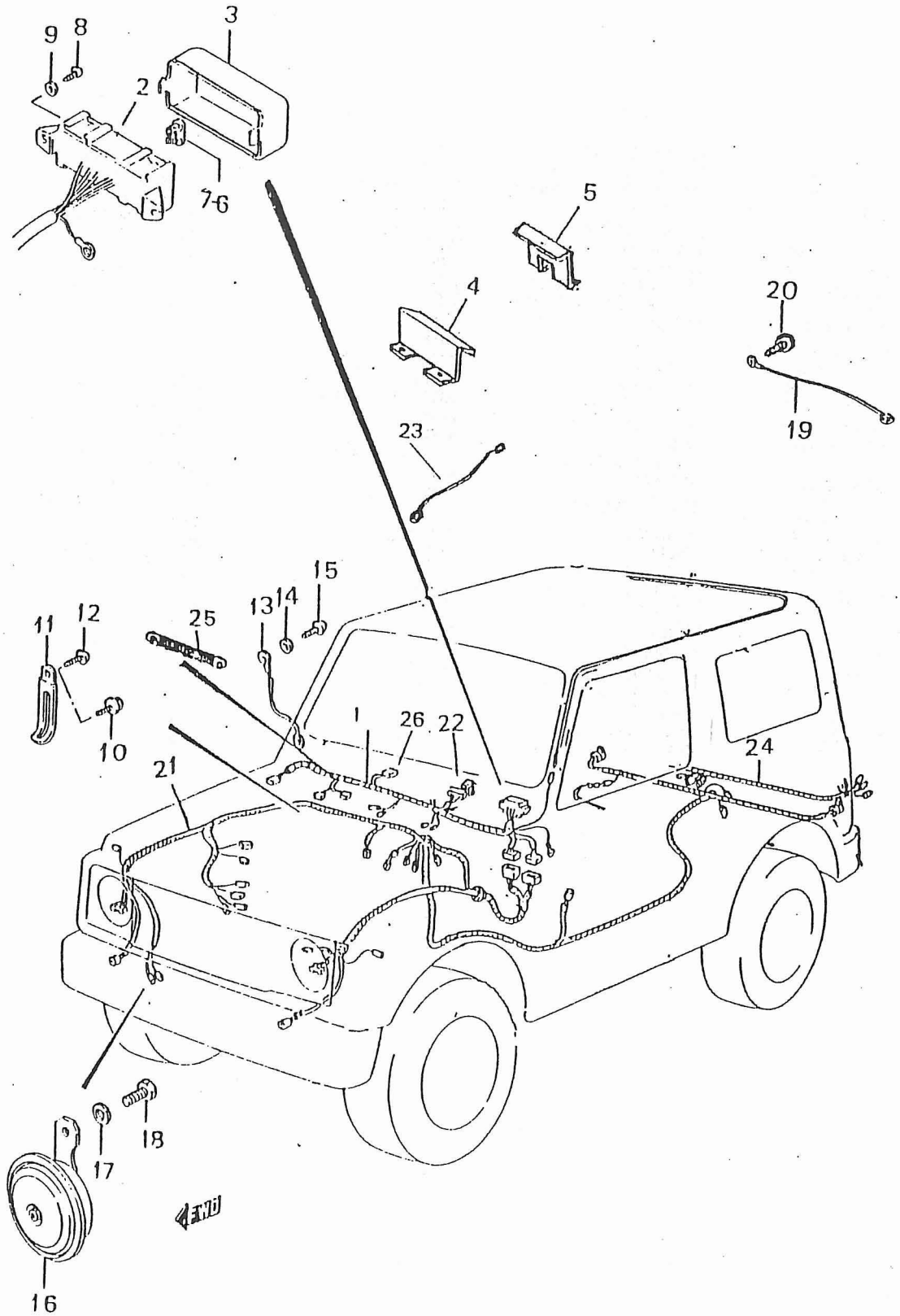

PUBLICACION N:A00523 GRUPO=CATAG SJ-413 SAMURAI SUBGRUPO=1F12CABLEADOS
EDICION N: 3 GROUP=CATAG S-413 SAMURAI SUBGROUP=1F12WIRING HARNES
GROUPE=CATAG SJ-413 SAMURAI SUBGROUPE=1F12FAISCEAUX/CABLES

N.FIG PLATE N.FIG	N.PIEZA PARTNUMBER N.PIECE	CAN QTY OUT	DENOMINACION	DESCRIPTION	DENOMINATION	OBSERVACIONES
1	36610A70A20	1	CABLEADO N1	WIRING HARNESS N1	CABLEAGE N1	U.K.
	36610A70A30	1	CABLEADO N 1	WIRING HARNESS 1	CABLEAGES N1	
2	35160-00000	1	PLACA CIRCUITO IMPRE	PLATE	CIRCUIT IMPRIME	
3	35163-00000	1	TAPA CAJA FUSIBLE	FUS COVER	COUVERC.BOITE FUS.	
4	35159-00000	1	SOP SUP CAJA FUSIBLE	UPPER SUPPORT BOX	SUPPORT B.FUSIBLE	
5	35158-00000	1	SOP INF CAJA FUSIBLE	LOWER SUPPORT BOX	SUPPORT INF.BOITE	
6	35154-00000	4	FUSIBLE 5 AMP	FUSE 5AMP	FUSIBLE 5 AMP	
	35155-00000	5	FUSIBLE 10 AMP	FUS 10 AMP	FUSIBLE 10 AMP	
	35156-00000	5	FUSIBLE 15 AMP	FUS 15 AMP	FUSIBLE 15 AMP	
7	35157-00000	1	FUSIBLE 20 A	FUS 20 A	FUSIBLE 20 AMP	
8	03211-04126	4	TORNILLO	SCREW	VIS	
9	02008-00000	4	ARANDELA	WASHER	RONDELLE	
10	09129-06002	2	TORNILLO MASA	SCREW EARTH	VIS TERRE	
11	09404A06415	7	ABRAZADERA	CLAMP	COLLIER DE SERRAGE	
12	03141-05126	7	TORNILLO	SCREW	VIS	
13	36821A80000	1	CABLEADO MASA	LEAD WIRE EARTH	CABLAGE TERRE	
14	08322-21056	2	ARANDELA	WASHER	RONDELLE	
15	03111-05126	2	TORNILLO	SCREW	VIS	
16	38500A80100	1	BOCINA	HORN ASSY	AVERTISSEUR	
17	08321B31086	1	ARANDELA	WASHER	RONDELLE	
18	01104-08126	1	TORNILLO	BOLT	VIS	
19	39312A80000	1	CABLE SUPRESOR RUIDO	LEAD NOISE SUPPRESSE	CABLE VALE	
20	03141-06126	1	TORNILLO	SCREW	VIS	
21	36620A70A10	1	CABLEADO N2	WIRING HARNES N2	CABLEAGE N2	U.K.
	36620A74A10	1	CABLEADO N2	WIRING HARNES N2	CABLEAGE N2	LONG BODY
	36620A83041	1	CABLEADO N2	WIRING HARNES N2	CABLEAGE N2	H 72080
	36620B83041	1	CABLEADO N2	WIRING HARNES N2	CABLEAGE N2	D 72081
22	36620C80055	1	CABLE CONTROL FRENOS	BRAKE LIQD WIRING	CABLAGE C.FREINS	
23	35233-00000	1	CABLE RELOJ	CABLE WATCH	CABLE MONTRE	
24	36610J83040	1	CABLE ANTINIEBLA	CABLE FOG	CVABLE ANTIBROU	
25	35174-00000	1	ANTI-PARASITARIOS	GRONDED COOPER	ANTI-PARASITARIE	
26	35197-00000	1	CAJA DIODOS	DIODES BOX	BOITE DIODES	

FIG. 41

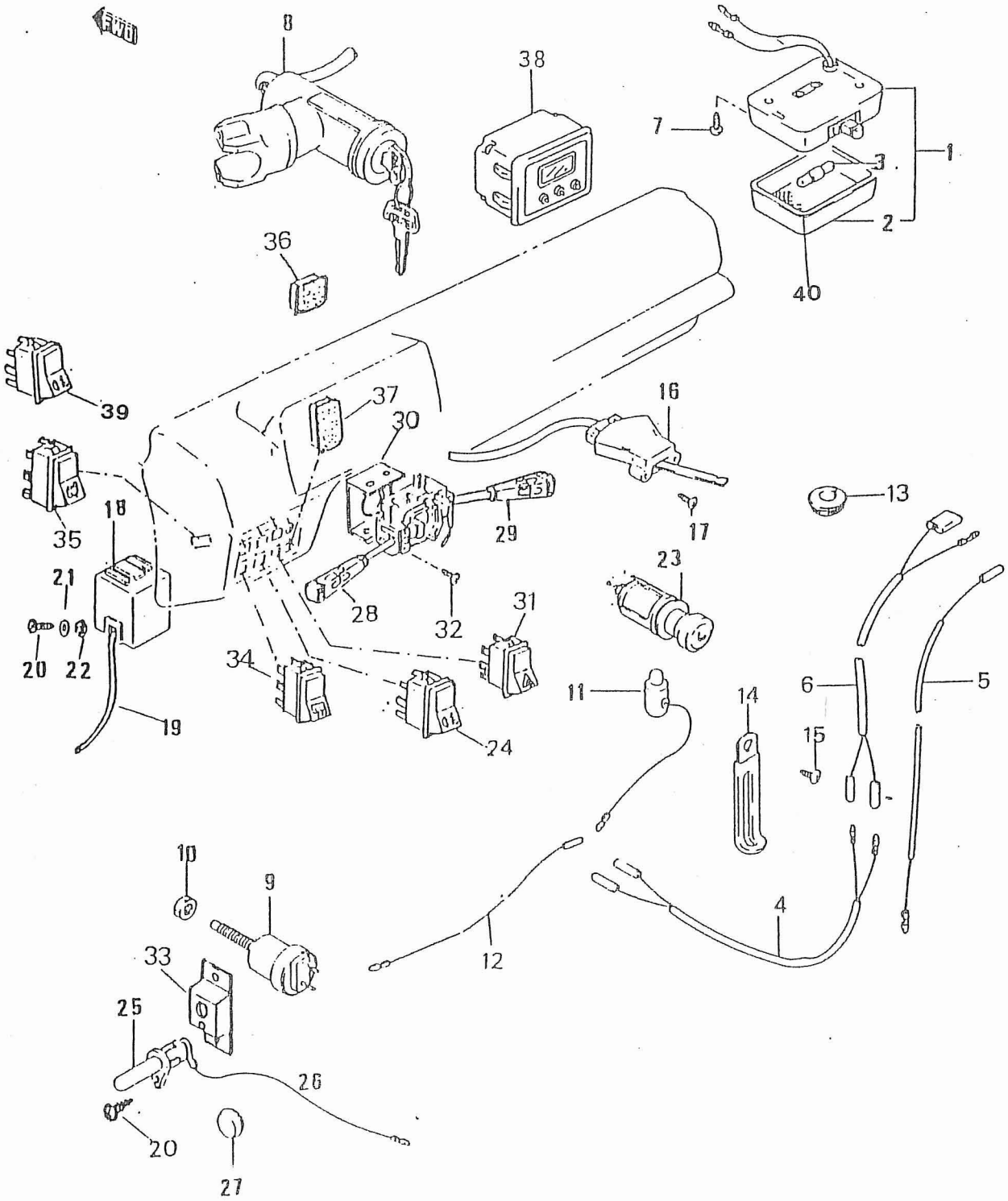
FWD
8
38
7
1
3
2
40
36
39
37
30
16
35
18
29
17
13
21
23
28
32
31
20
22
34
11
14
6
5
19
24
15
10
9
4
12
33
25
26
20
27

PUBLICACION N:A00523 GRUPO=CATAG SJ-413 SAMURAI SUBGRUPO=1F13INTERRUPTORES
EDICION N: 3 GROUP=CATAG S-413 SAMURAI SUBGROUP=1F13SWITCHES
GROUPE=CATAG SJ-413 SAMURAI SUBGROUPE=1F13INTERRUPTEURS

N.FIG PLATE N.FIG	N.PIEZA PARTNUMBER N.PIECE	CAN QTY OUT	DENOMINACION	DESCRIPTION	DENOMINATION	OBSERVACIONES
1	36210A79003	1	CONJ LUZ TECHO	LAMP ASSY ROOM	ECLAIRAGE INT	
2	00000A00075	1	PLASTICO	LENS	VERRE	
3	36210B79003	1	LAMPARA 12 V	BULB 12 V 5W	LAMPE 12 V 5W	
4	36820A80010	1	CABLE LUZ TECHO V-J	WIRING LIGTH ROOF J	CABLE PLAFON MOD-J	
5	36820A61000	1	CABLE LUZ TECHO V-V	WIRING LIGTH ROOF V	CABLE PLAFON MOD-V	
6	36820A80000	1	CABLE LUZ TECHO V J	WIRING LIGTH ROOF J	CABLE PLAFON MOD-J	
7	03141-04166	2	TORNILLO	SCREW	VIS	
8	00000A00297	1	LLAVE EN BRUTO	BRUTTE KEY	CLE BRUTE	
	37100A73302	1	CONJ CIERRE DIRECCIO	LOCK ASSY STEERING	VERROU DIRECTION	H 78033
	37100B73302	1	CONJ CIERRE DIREC.	LOCK ASSY STEERING	VERRROU DIRECTION	D 78034
9	37740A66010	1	INTERRUPTOR PARE	LIGTH SWITCH STOP	INTERRUPTEUR STOP	
10	08310-22106	1	TUERCA	NUT	ECROU	
11	37940A79000	1	INTERRUPTOR FRENO MA	BRAKESWITCH	INT.FREIN A MAIN	
12	36850A79500	1	CABLE INTERRUPTOR FR	LEAD WIRE	CABLE INTERRUPTEUR	
13	09308-14006	1	PASACABLES	GROMMMET	PASSECABLES	
14	09404A06402	2	CLIP	CLIP	CLIP	
15	03111-05128	1	TORNILLO	SCREW	VIS	
16	37870-80000	1	INTERRUPTOR CALEFACT	SWITCH ASSY HEATER	INTERRUPTEUR VENTIL	
17	03211-04106	2	TORNILLO	SCREW	VIS	
18	38610D78303	1	RELE	RELAY ELECTRONIC	RELAIS ELECTRONIQUE	
19	38610B78303	1	CABLE RELE	RELAY CABLE	CABLE RELAIS	
20	03141-04126	2	TORNILLO	SCREW	VIS	
21	08322-21048	1	ARANDELA PLANA	WASHER	RONDELLE	
22	08323A31056	1	ARANDELA PLANA	WASHER	RONDELLE	
23	39400A83000	1	CONJ ENCENDEDOR	LIGHTER SET	ENS ALLUME.CIGARRE	
24	37280A50A00	1	INTERRUPT ANTINIEBLA	SWITCH FOG	INTERRUP.BROUILLAR	
25	37670D80000	1	INTERRUPTOR PUERTA	SWITCH DOOR	INTERRUPTEUR PORTE	
26	37670E80000	1	CABLE	CABLE	CABLE	
27	09250-14003	1	TAPON	PLUG	BOUCHON	
28	37400A84420	1	INTERRUPTOR COMBINAC	SWITCH COMBINATION	INTERRPT.COMBINE	
29	37400B84420	1	INTERRUPTOR LIMPIA	SWITCH WINDSOREEN	INTERRUP ESSUIE-GLAC	
30	37400C84420	1	SOPORTE MANDO	SUPPORT LIGTH	SUPPORT LUMIERE	
31	35222-00000	1	INTERRUPT EMERGENCIA	SWITCH EMERGENCY	INTERRPUT DETRESSE	
32	03141-04086	4	TORNILLO	SCREW	VIS	
33	37670C80000	2	SOPORTE	SUPPORT	SUPPORT	
34	37860A50A00	1	INTERRUPTOR LUNETA	SWITCH	INTERRUPT TERMIQUE	
35	35223-00000	1	PULSADOR LAVA-PARAB.	PUSH WASHER REAR	PULSATEUR EAU AR	
36	35132-00000	1	TAPON CONTROL	CONTROL PLUG	BOUCHON CONTROL	
37	35133-00000	1	TAPON INTERRUPTOR	SWITCH PLUG	BOUCHON INTERRUPTEUR	
38	34600A50A00	1	RELOJ	WASTCH	MONTRE	
39	35256-00000	1	INTERRUPTOR LAVA	SWITCH REAR WASHER	INTERRUPTEUR AR	D 66290
40	35255-00000	1	JUNTA	GASKET	JOINT	

FIG.42

F - 14

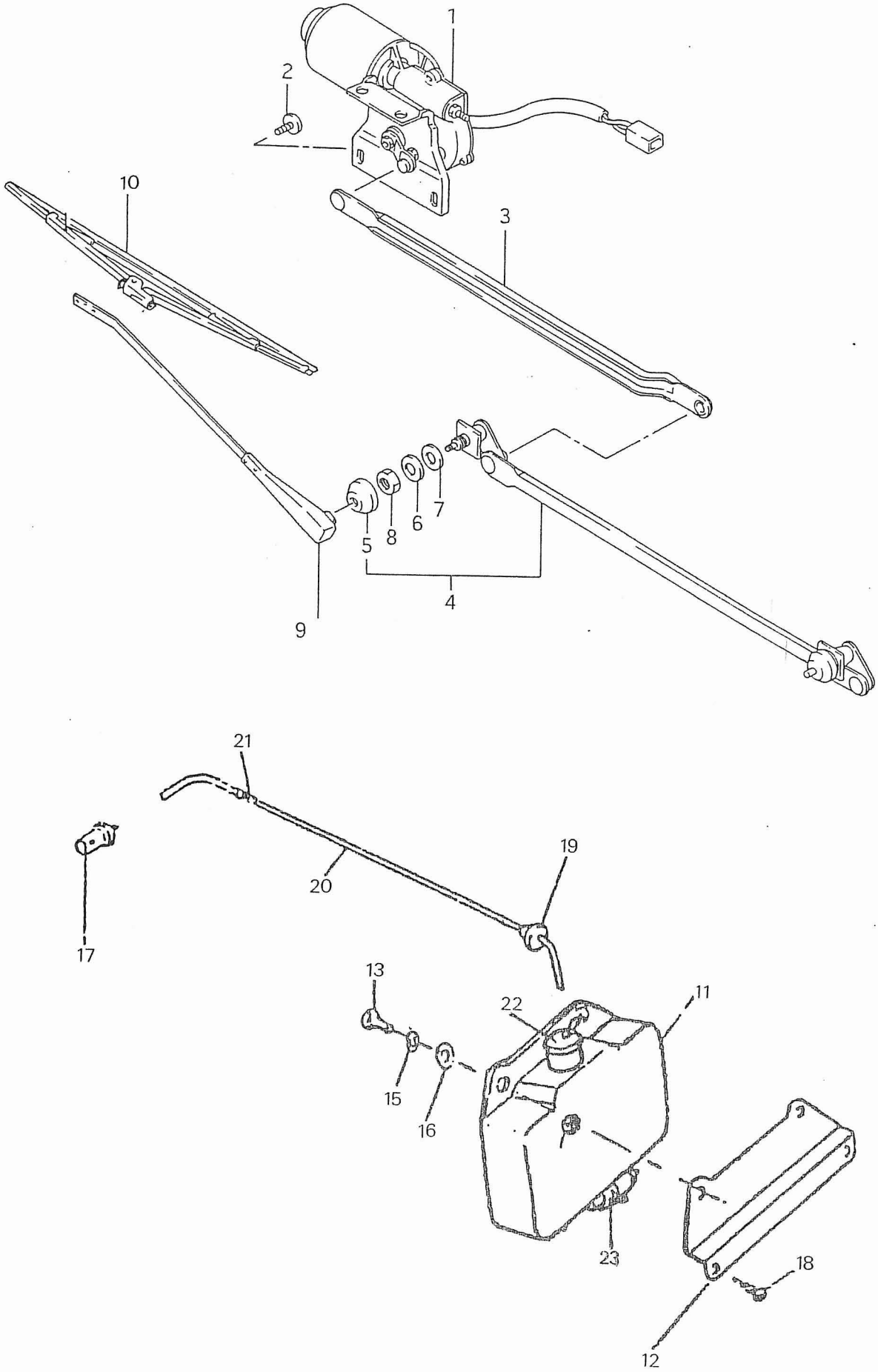

PUBLICACION N:A00523 GRUPO=CATAG SJ-413 SAMURAI SUBGRUPO=1F14LAVAPARABRISAS
EDICION N: 3 GROUP=CATAG S-413 SAMURAI SUBGROUP=1F14WIPER-WASHER
GROUPE=CATAG SJ-413 SAMURAI SUBGROUPE=1F14ESSUIE/VITRE

N.FIG PLATE N.FIG	N.PIEZA PARTNUMBER N.PIECE	CAN QTY OUT	DENOMINACION	DESCRIPTION	DENOMINATION	OBSERVACIONES
1	38101-70A00	1	MOTOR	MOTOR ASSY	MOTEUR	U.K.
	38101-80031	1	MOTOR	MOTOR ASSY	MOTEUR	
2	02142-06125	4	TORNILLO	SCREW	VIS	
3	38255-80000	1	VARILLA	ROD	TRINGLE	
4	38102-70A00	1	CONJ.BIELA	LINK ASSY	ENS BIELLE	U.K.
	38102-80031	1	CONJ.BIELA	LINK ASSY	ENS BIELLE	
5	38274-78000	2	GOMA	CAP	CAOUTCHOUC	
6	38271-71310	2	ARANDELA	WASHER	RONDELLE	
7	38272-71310	2	JUNTA	GASKET	JOINT	
8	08316B16066	2	TUERCA	NUT	ECROU	
9	38310A80030	2	BRAZO	ARM	BRAS	
10	38340A63641	2	ESCOBILLA	BLADE	BALAIS	
11	38400E80000	1	BOTELLA AGUA	TANK ASSY WATER	RESERVOIR EAU	
12	38400B80000	1	SOPORTE BOTELLA	BRACKET	SUPPORT	
13	01104-06166	2	TORNILLO	SCREW	VIS	
14	08310-11066	2	TUERCA	NUT	ECROU	
15	08321A31066	2	ARANDELA	WASHER	RONDELLE	
	08322-21066	2	ARANDELA	WASHER	RONDELLE	
17	38480-80000	1	DIFUSOR	NOZZLE	INYECTEUR	
18	02142-06126	2	TORNILLO	SCREW	VIS	
19	89191A80002	1	PASACABLE	BOOT	PASSECABLE	
20	38400C80000	1	CONJ.TUBOS	WATER DUCT ASSY	TUYANTERIE	
21	00000A00282	1	VALVULA	VALVE	VALVE	
22	00000A00292	1	TAPON DEPOSITO	CAP	BOUCHON	
23	00000A00281	1	BOMBA DEPOSITO	WATER PUMP	POMPE	

FIG. 43

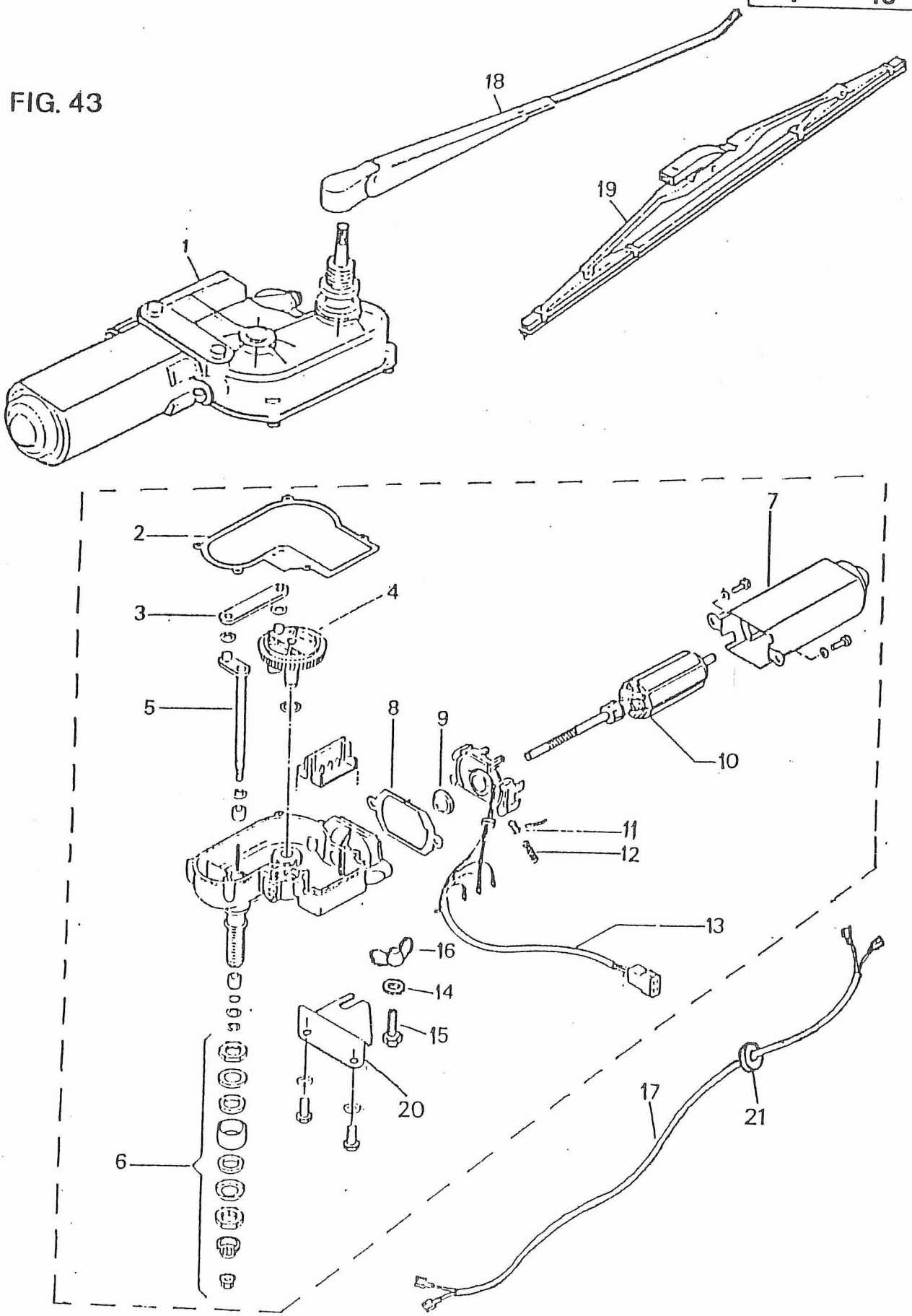

PUBLICACION N:A00523 GRUPO=CATAG SJ-413 SAMURAI SUBGRUPO=1F15LIM HARD-TOP TRA
EDICION N: 3 GROUP=CATAG S-413 SAMURAI SUBGROUP=1F15WIPER REAR H.T.
GROUPE=CATAG SJ-413 SAMURAI SUBGROUPE=1F15ESSU.VITRE H.TOP

N.FIG PLATE N.FIG	N.PIEZA PARTNUMBER N.PIECE	CAN QTY OUT	DENOMINACION	DESCRIPTION	DENOMINATION	OBSERVACIONES
1	35008-00000	1	CONJ MOTOR LIMPIA	WIPER MOTOR ASSY	MOTEUR ESSUI-VITRE	
2	00000A00330	1	JUNTA	GASKET	JOINT	
3	00000A00331	1	BIELA CONDUCIDA	CONNECTING ROD	BIELLE MENEE	
4	00000A00332	1	RUEDA EJE	SHAFT WHEEL	ROUE AXE	
5	00000A00333	1	BIELA MOTRIZ	CONNECTING ROD	BILELLE MENANTE	
6	00000A00334	1	CONJ SUJECCION	SUPPORT ASSY	ENSSUPPORT	
7	00000A00335	1	ARMADURA	COVER	COUVERCLE	
8	00000A00336	1	JUNTA	GASKET	JOINT	
9	00000A00337	1	ARANDELA GOMA	RUBBER WASHER	RONDELLE CAOUTCHOUC	
10	00000A00338	1	INDUCIDO	STATOR	INDUIT	
11	00000A00339	1	ESCOBILLA	BRUSH	BALAIS	
12	00000A00340	1	MUELLE	SPRING	RESSORT	
13	00000A00341	1	SOP ESCOBILLA Y CABL	BRUSH HOLDER	SUP.BALAIS ET CABLE	
14	09160-06020	1	A PLANA	WASHER	RONDELLE	
15	00004-00000	1	TORNILLO	BOLT	VIS	
16	04002-00000	1	TUERCA MARIPOSA	BUTTERFLY NUT	ECROU PAPILLON	
17	35226-00000	1	CABLE MOTOR LIMPIA	WIPER MOTOR WIRING	CABLAGE MOTEUR ESS	
18	35009-00000	1	BRAZO	ARM	BRAS ESSUIE VITRE	
19	35010-00000	1	ESCOBILLA	BLADE	BALAIS ESSUIE VITRE	
20	00000A00487	1	SOPORTE MOTOR	SUPPORT MOTOR	SOUPORT MOTEUR	
21	37070-00000	4	A PASACABLES	GROMMET	PASSECABLES	

FIG. 44

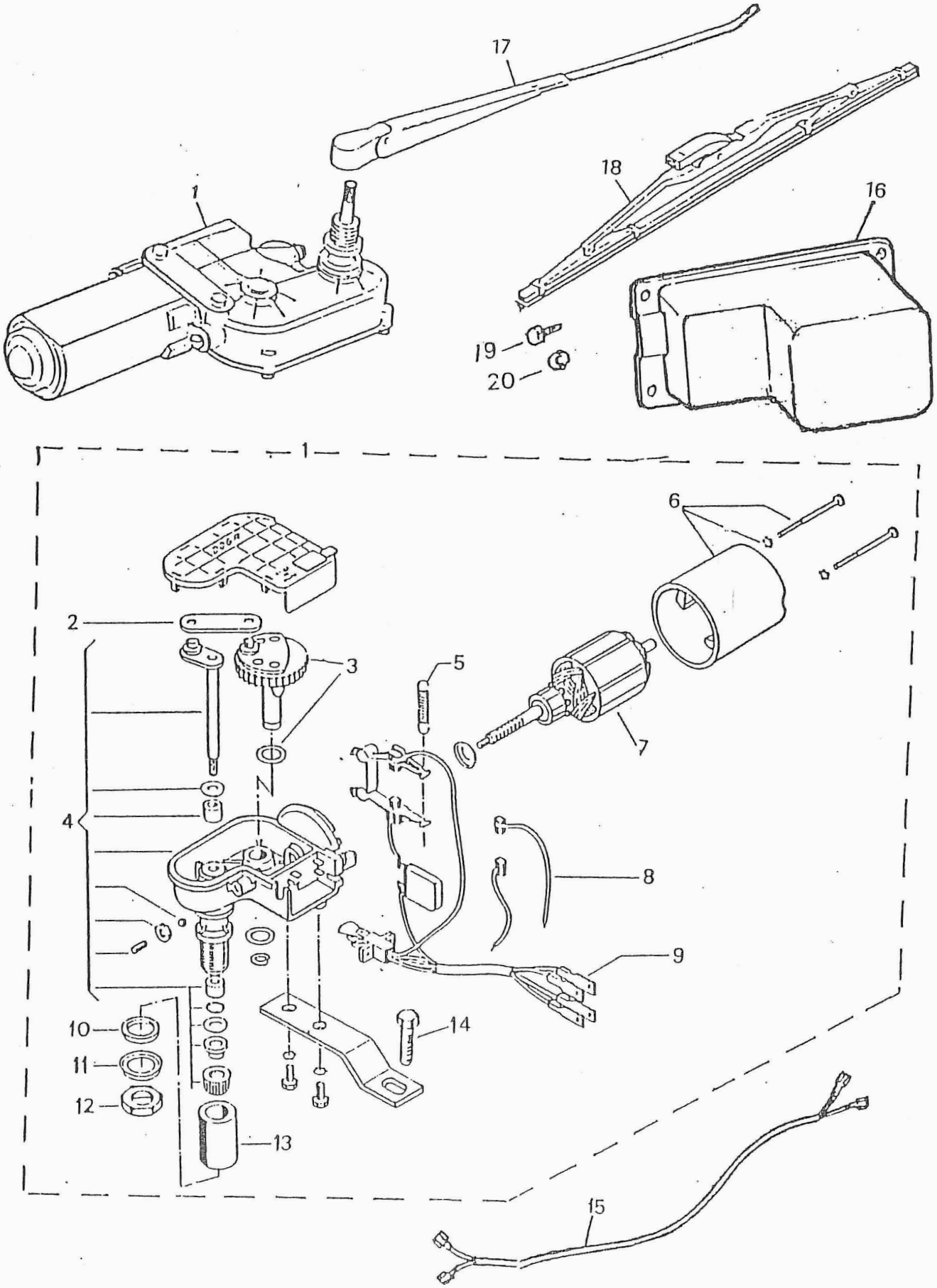

PUBLICACION N:A00523 GRUPO=CATAG SJ-413 SAMURAI SUBGRUPO=1F16LIM MOD-V TRAS
EDICION N: 3 GROUP=CATAG S-413 SAMURAI SUBGROUP=1F16WIPER REAR MOD V
GROUPE=CATAG SJ-413 SAMURAI SUBGROUPE=1F16ESSU.VITRE MOD-V

N.FIG PLATE N.FIG	N.PIEZA PARTNUMBER N.PIECE	CAN QTY OUT	DENOMINACION	DESCRIPTION	DENOMINATION	OBSERVACIONES
1	35017-00000	1	MOTOR LIMP TRASERO	REAR WIPER MOTOR	MOTEUR ESSUIE VITRE	
2	00000A00342	1	BIELA CONDUCIDA	ROD	BIELLE MENEE	
3	00000A00343	1	RUEDA EJE	SHAFT WHEEL	ROUE AXE	
4	00000A00344	1	CARCASA	HOUSING ASSY	LOGEMENT	
5	00000A00345	1	MUELLE	SPRING	RESSORT	
6	00000A00346	1	ARMADURA	ARMATURE	COUVERCLE	
7	00000A00347	1	INDUCIDO	INDUIT	INDUIT	
8	00000A00348	2	ESCOBILLA	BRUSH	BALAI	
9	00000A00349	1	SOP ESCOBILLA CABLE	BRUSH HOLDER CABLE	SUP BALAI ET CABLE	
10	00000A00350	1	ARANDELA	WASHER	RONDELLE	
11	00000A00351	1	CAZOLETA	COVER	CAZOLETTE	
12	00000A00352	1	TUERCA	NUT	ECROU	
13	00000A00353	1	CASQUILLO	BUSH	BAGUE	
14	03141-04086	1	TORNILLO	BOLT	VIS	
15	35231-00000	1	CABLEADO MOTOR	WIRING WIPER REAR	CABLAGE MOTEUR ESS	
16	35021-00000	1	CUBIERTA MOTOR	MOTOR COVER	COUVERCLE MOTEUR	
17	35018-00000	1	BRAZO	ARM	BRAS	
18	35103-00000	1	ESCOBILLA	BLADE	BALAIS	
19	03141-04085	4	TORNILLO	SCREW	VIS	
20	WC105004	4	A PLANA	WASHER	RONDELLE	

FIG. 45

H - 08

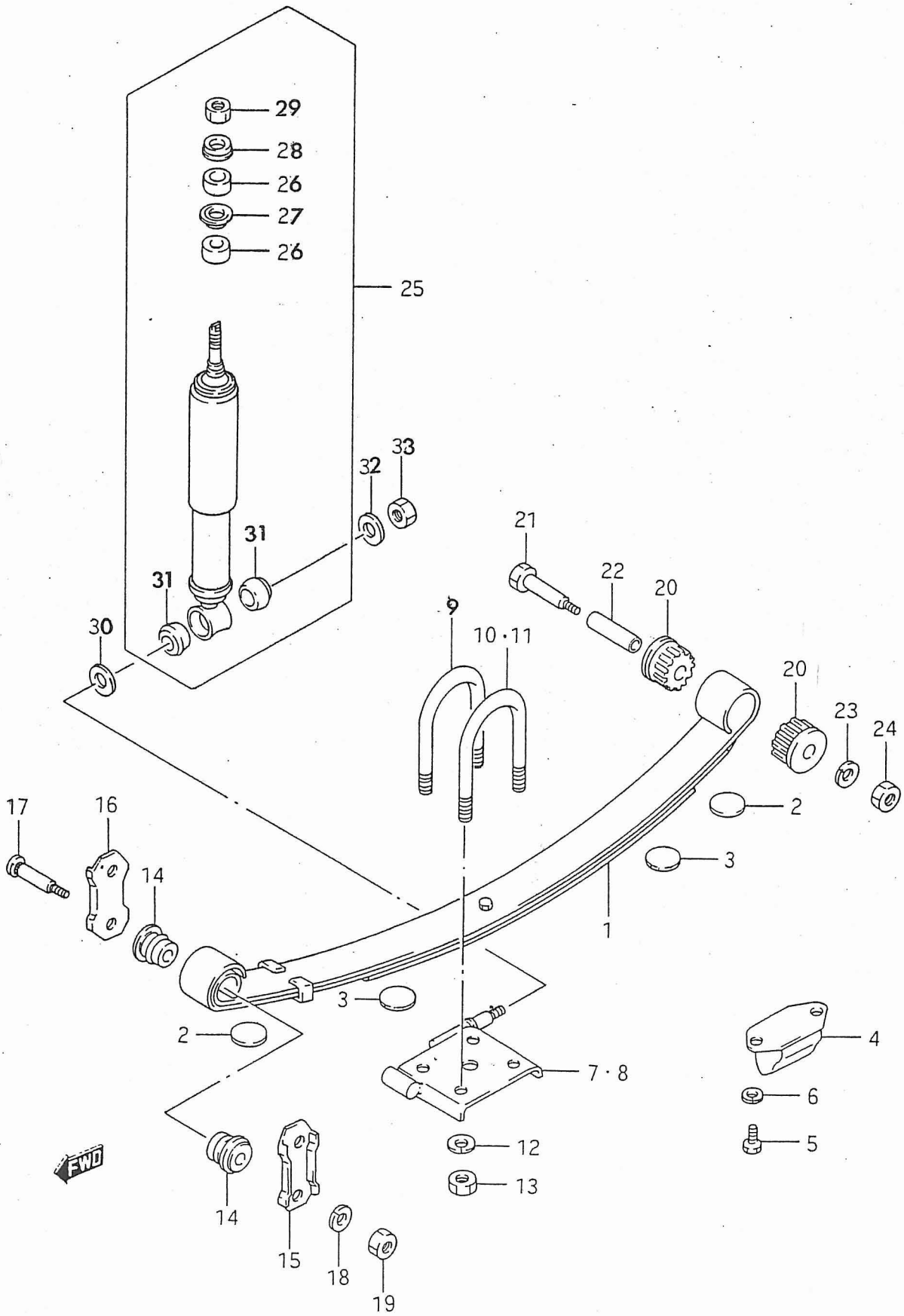
29
28
26
27
26
25
33
32
31
31
30
21
22
20
9
10·11
20
23
24
2
3
1
17
16
14
3
2
7·8
4
6
5
12
13
FWD
14
15
18
19

PUBLICACION N:A00523 GRUPO=CATAG SJ-413 SAMURAI SUBGRUPO=1H08SUSP.DELANTERA
EDICION N: 3 GROUP=CATAG S-413 SAMURAI SUBGROUP=1H08SUSP.FRONT
GROUPE=CATAG SJ-413 SAMURAI SUBGROUPE=1H08SUSP.AVANT

N.FIG PLATE N.FIG	N.PIEZA PARTNUMBER N.PIECE	CAN QTY OUT	DENOMINACION	DESCRIPTION	DENOMINATION	OBSERVACIONES
1	41110-70A00	2	BALLESTA DELANTERA	SPRING ASSY FRONT	RESSORT A LAMES AV	
2	41118A70A00	2	TOPE DE GOMA	RUBBER STOPPER	BUTEE CAOUTCHOUC	
3	41117-70A00	8	TOPE GOMA	BUMPER RUBBER	BUTEE CAOUTCHOC	
4	42110-80010	2	TOPE GOMA	RUBBER TOPPER	BUTEE CAOUTCHOC	
5	01104-08163	4	TORNILLO	BOLT	VIS	
6	08321B31086	4	ARANDELA	WASHER	RONDELLE	
7	41230-70A00	1	PLACA LD	PLATA RH	PLAQUE CD	
8	41240-70A00	1	PLACA LI	PLATE LH	PLAQUE CG	
9	41411-83010	1	ABARCON EXT LD	V BOLT OUTER RH	BRIDE RESSORT EXT CD	
10	41411-83000	2	ABARCON LI	V BOLT LH	BRIDE RESSORT CG	
11	41411-83020	1	ABARCON ANT LD	V BOLT INNER RH	BRIDE RESSORT INT CG	
12	08321A31123	8	ARANDELA	WASHER	RONDELLE	
13	08310-11123	8	TUERCA	NUT	ECROU	
14	09305-13002	8	CASQUILLO GEMELO	BUSCH SHACKLE	BAGUE JUMELLE	
15	41461-79000	2	PLACA INT GEMELA	PLATE SHACKLE INNER	PLATE INT JUMELLE	
16	41462-79000	2	PLACA EXT GEMELA	PLATE SHACKLE OUTER	PLAQUE EXT JUMELLE	
17	41463-82000	4	PERNO GEMELA	PIN SHACKLE	BOULON	
18	08321B31103	4	ARANDELA	WASHER	RONDELLE	
19	08310-11103	4	TUERCA	NUT	ECROU	
20	41331-62020	4	CASQUILLO BALLESTA	BUSCH SPRING	BAGUE	
21	09100-12025	2	TORNILLO	BOLT	VIS	
22	09180-12035	2	CASQUILLO	SPACER	BAGUE	
23	08321A31123	2	ARANDELA	WASHER	RONDELLE	
24	08310-11123	2	TUERCA	NUT	ECROU	
25	41600B70A00	2	AMORTIGUADOR	SHOCK ABSORBER	AMORTISSEUR	
26	40026-00000	4	CASQUILLO GOMA	RUBBER BUSCH	CAOUTCHOUC	
27	40027-00000	2	ARANDELA	WASHER	RONDELLE	
28	40028-00000	4	ARANDELA	WASHER	RONDELLE	
29	40029-00000	2	TUERCA	NUT	ECROU	
30	08322-21163	2	ARANDELA	WASHER	RONDELLE	
31	45025-00000	4	CASQUILLO	RUBER BUSH	CAOUTCHOUC	
32	09160-12073	2	ARANDELA	WASHER	RONDELLE	
33	08310-11123	2	TUERCA	NUT	ECROU	

FIG. 46

H - 09

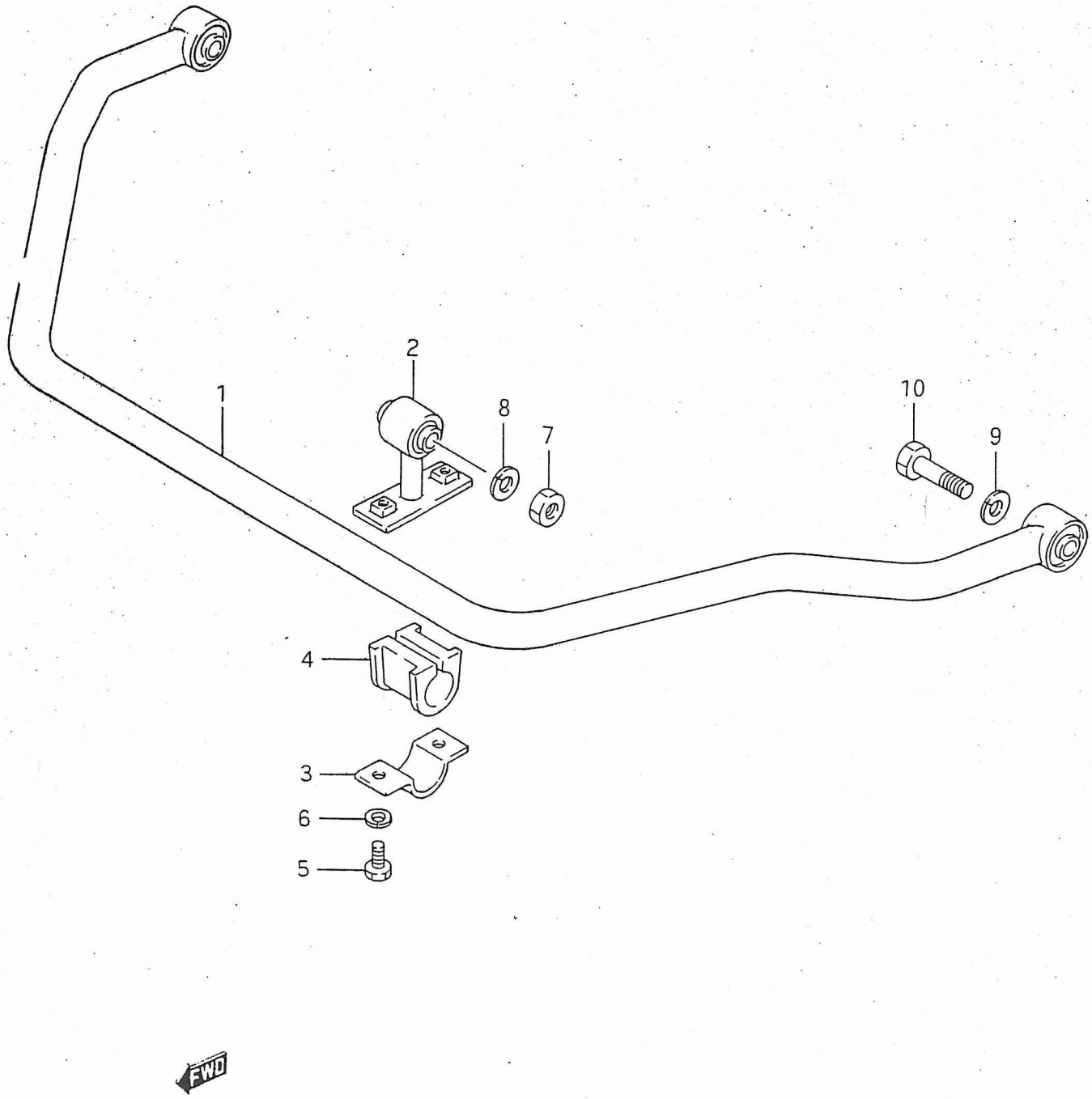

PUBLICACION N:A00523 GRUPO=CATAG SJ-413 SAMURAI SUBGRUPO=1H09BARRA ESTABILIZ.
EDICION N: 3 GROUP=CATAG S-413 SAMURAI SUBGROUP=1H09STABILIZER BAR
GROUPE=CATAG SJ-413 SAMURAI SUBGROUPE=1H09BARRE ESTABILIZA

N.FIG PLATE N.FIG	N.PIEZA PARTNUMBER N.PIECE	CAN QTY OUT	DENOMINACION	DESCRIPTION	DENOMINATION	OBSERVACIONES
1	42300-70A00	2	BARRA ESTABILIZ	STABILIZER FRONT	BARRE STABIL AVANT	
2	42400-83001	2	SOPORTE DELANTERO	ROD ASSY FRONT	SUPPORT AVANT	
3	42415-83000	2	PLACA SOPORTE	PLATE MOUNT	PLAQUE SUPPORT	
4	42412-70A00	2	CASQUILLO	BUSH	BAGUE	
5	01107-08203	4	TORNILLO	BOLT	VIS	
6	08321B31083	4	ARANDELA	WASHER	RONDELLE	
7	08310-11103	2	TUERCA	NUT	ECROU	
8	08321B31103	2	ARANDELA	WASHER	RONDELLE	
9	08321A31123	2	ARANDELA	WASHER	RONDELLE	
10	09100-12041	2	TORNILLO DELANTERO	BOLT FRONT	VIS AVANT	

FIG. 47

G - 05

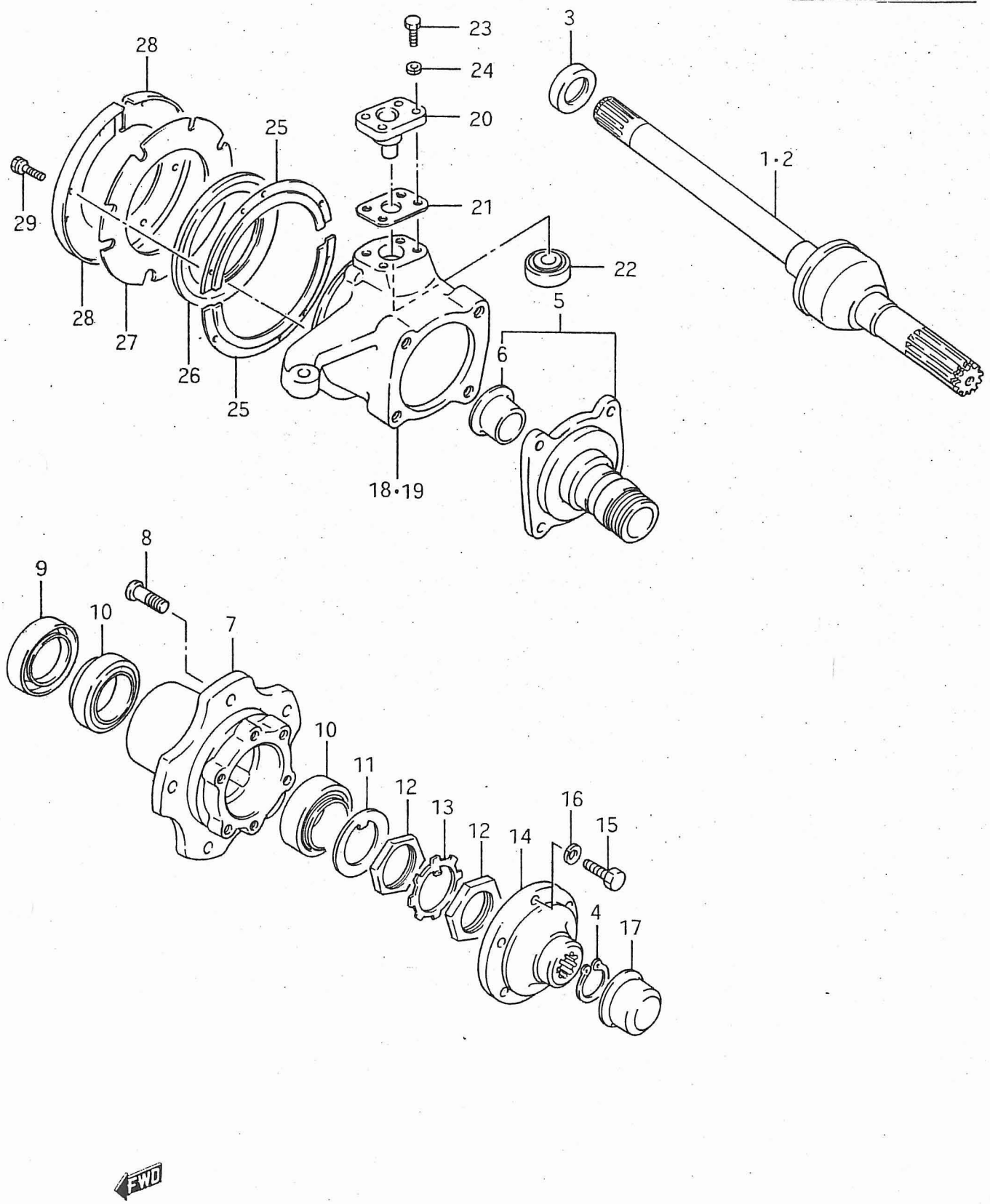
23
24
20
21
22
3
1·2
28
25
29
28
27
26
25
5
6
18·19
8
9
10
7
10
11
12
13
12
14
16
15
4
17
FWD

PUBLICACION N:A00523 GRUPO=CATAG SJ-413 SAMURAI SUBGRUPO=1G05CARTER PIVOTE SE
EDICION N: 3 GROUP=CATAG S-413 SAMURAI SUBGROUP=1G05FRONT AXLE
GROUPE=CATAG SJ-413 SAMURAI SUBGROUPE=1G05CARTERS PIVOTS

N.FIG PLATE N.FIG	N.PIEZA PARTNUMBER N.PIECE	CAN QTY OUT	DENOMINACION	DESCRIPTION	DENOMINATION	OBSERVACIONES
1	44101A83300	1	PALIER LD DEL	JOINT ASSY RH	AXE CD AVANT	
2	44102A83300	1	PALIER LI DEL	JOINT ASSY LH	AXE CG AVANT	
3	09283-26016	2	RETEN	OIL SEAL	ARRETOIR	
4	08331-31266	2	CIRCLIP	CIRCLIP	CIRCLIP	
5	43440-80002	2	MANGUETA DEL.	SPINDLE FRONT	FUSEE AVANT	
6	43445-80002	2	CASQUILLO	BUSH	BAGUE	
7	43421-80001	2	CUBO RUEDA DEL	HUB FRONT WHEEL	CUBE ROUE AVANT	
8	09119-12005	10	TORNILLO	BOLT	VIS	
9	09283-50002	2	RETEN	OIL SEAL	ARRETOIR	
10	09265A41001	4	RODAMIENTOS	BEARING	ROULEMENT	
11	43465-80000	2	ARANDELA	WASHER	RONDELLE	
12	43461-80000	4	TUERCA	NUT	ECROU	
13	43466-80000	2	ARANDELA CIERRE	LOCK WASHER	RONDELLE	
14	43471-80001	2	BRIDA	FLANGE	BRIDE	
15	01107-08256	12	TORNILLO	BOLT	VIS	
16	08321B31086	12	ARANDELA	WASHER	RONDELLE	
17	43241-80001	2	TAPACUBOS	CAP FRONT AXLE	COUVERC MOYEU	
18	45111-80001	1	ALOJAMIENTO LD	KNUCKLE STEERING RH	LOGEMENT CD	
19	45151-80001	1	ALOJAMIENTO LI	KNUCKLE STEERING LH	LOGEMENT CG	
20	45610-63001	4	SEMIEJE GIRO	KING PIN	DEMI-ARBRE	
21	45621-63000	4	SUPLEMENTO 0 5	SHIM KING PIN 05	CALE 05	
	45622-63000	4	SUPLEMENTO 1 0	SHIM KING PIN 1 0	CALE 1 0	
22	09265A15002	4	RODAMIENTO	BEARING	ROULEMENT	
23	01107-08206	16	TORNILLO	BOLT	VIS	
24	08321B31086	16	ARANDELA	WASHER	RONDELLE	
25	45623-80000	4	PLACA RETENCION	RETAINER OIL SEAL	PLAQUE ARRETOIR	
26	09285-00002	2	RETEN	OIL SEAL	ARRETOIR	
27	45624-63001	2	FIELTRO	PAD	FEUTRE	
28	45625-63001	4	TAPA RETEN	COVER OIL SEAL	COUVERCLE	
29	45626-63000	16	TORNILLO	BOLT	VIS	

FIG.48

H-10

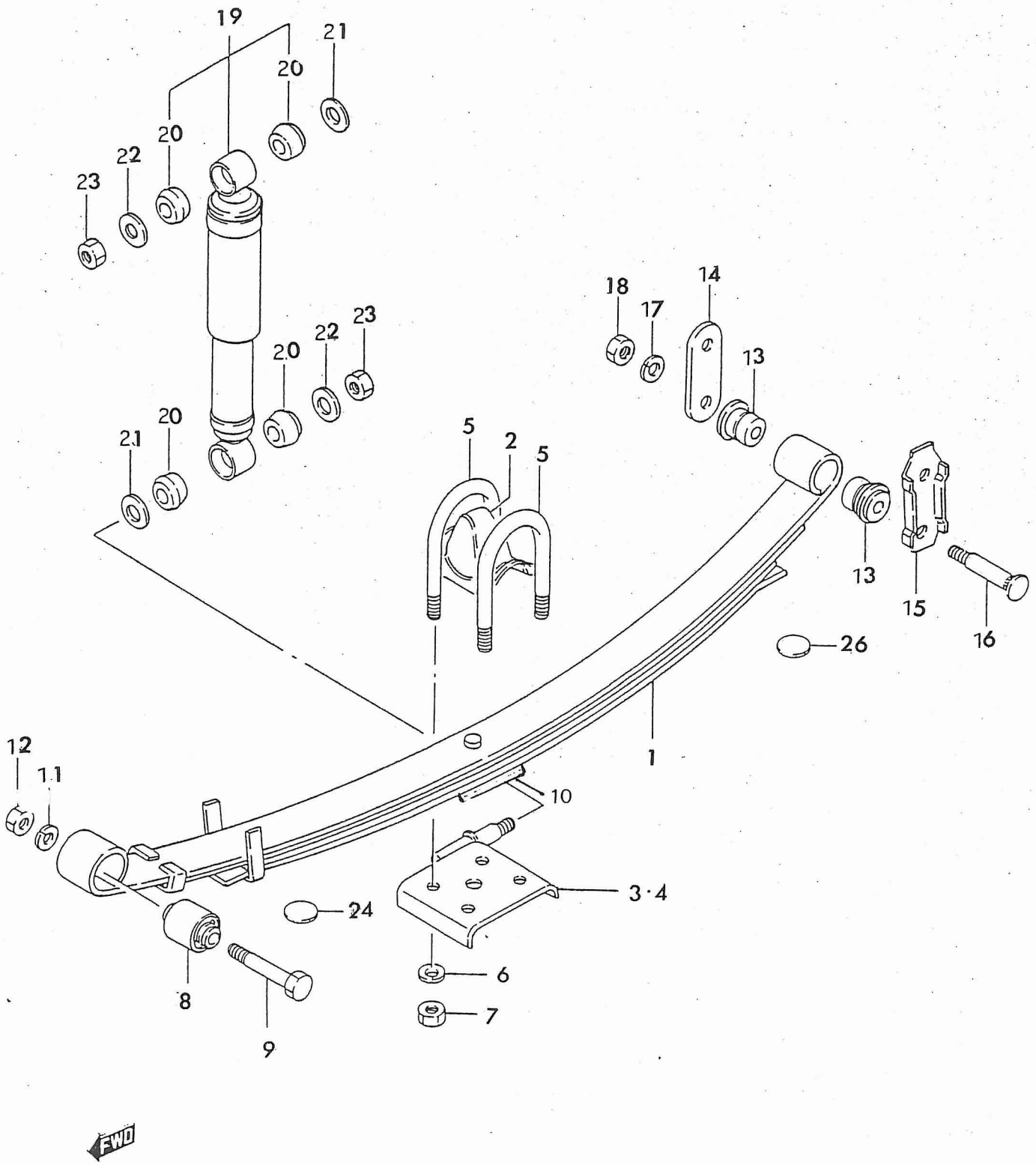
19
21
20
20
22
23
18
17
14
13
23
22
20
20
21
5
2
5
13
15
16
26
1
12
11
10
3·4
24
6
8
7
9
FWD

PUBLICACION N:A00523 GRUPO=CATAG SJ-413 SAMURAI SUBGRUPO=1H10SUSP.TRASERA
EDICION N: 3 GROUP=CATAG S-413 SAMURAI SUBGROUP=1H10SUSPEN.REAR
GROUPE=CATAG SJ-413 SAMURAI SUBGROUPE=1H10SUSP.ARRIERE

N.FIG PLATE N.FIG	N.PIEZA PARTNUMBER N.PIECE	CAN QTY OUT	DENOMINACION	DESCRIPTION	DENOMINATION	OBSERVACIONES
1	41310-70A10	2	CONJ BALLESTA TRAS	SPRING ASSY REAR	LAME RESSORT AR	
	41310-70A20	1	BALLESTA LI	SPRING ASSY LH	RESSORT CG	U.K.
2	42150A83000	2	TOPE DE GOMA	RUBBER REAR	CAOUTCHOUC ARRIERE	
3	41430-83000	1	PLACA LD BALLESTA	PLATE SPRING RH	PLAQUE RESSORT CD	
4	41440-83000	1	PLACA BALLESTA LI	PLATE SPRING LH	PLAQUE RESSORT CG	
5	41411-83000	4	ABARCON BALLESTA TRA	U BOLT	BRIDE ARRIERE	
6	08321A31123	8	ARANDELA	WASHER	RONDELLE	
7	08310-11123	8	TUERCA	NUT	ECROU	
8	09319-12023	4	CASQUILLO	BUSH	BAGUE	
9	09100-12025	2	TORNILLO	BOLT	VIS	
10	41116-83000	2	SEPARADOR CENTRAL	CENTER SPACER	ENTRETOISE	
11	08321A31123	2	ARANDELA	WASHER	RONDELLE	
12	08310-11123	2	TUERCA	NUT	ECROU	
13	09305-13006	8	CASQUILLO BALLESTA	BUSCH SHACKLE	BAGUE LAME-RESSORT	
14	41461A83300	2	PLACA GEMELA INT	PLATE SHACKLE INNER	PLAQUE JUMELLE INT	
15	41462-79000	2	PLACA GEMELA EXT	PLATE SHAKLE OUTER	PLAQUE EXT	
16	41463-82000	4	PERNO GEMELA	PIN	AXE GOUPILLE	
17	08321B31103	4	ARANDELA	WASHER	RONDELLE	
18	08310-11103	4	TUERCA	NUT	ECROU	
19	41700B70A00	2	AMORTIGUADOR	SHOCK ABSORBER	AMORTISSEUR	
20	40025-00000	4	CASQUILLO GOMA	RUBBER BUSH	CAOUTCHOUC	
21	08322-21163	4	ARANDELA	WASHER	RONDELLE	
22	09160-12073	4	ARANDELA	WASHER	RONDELLE	
23	08310-11123	4	TUERCA	NUT	ECROU	
24	41118-70A00	8	CASQUILLO	BUSH	BUTEE	

FIG.49

G - 06

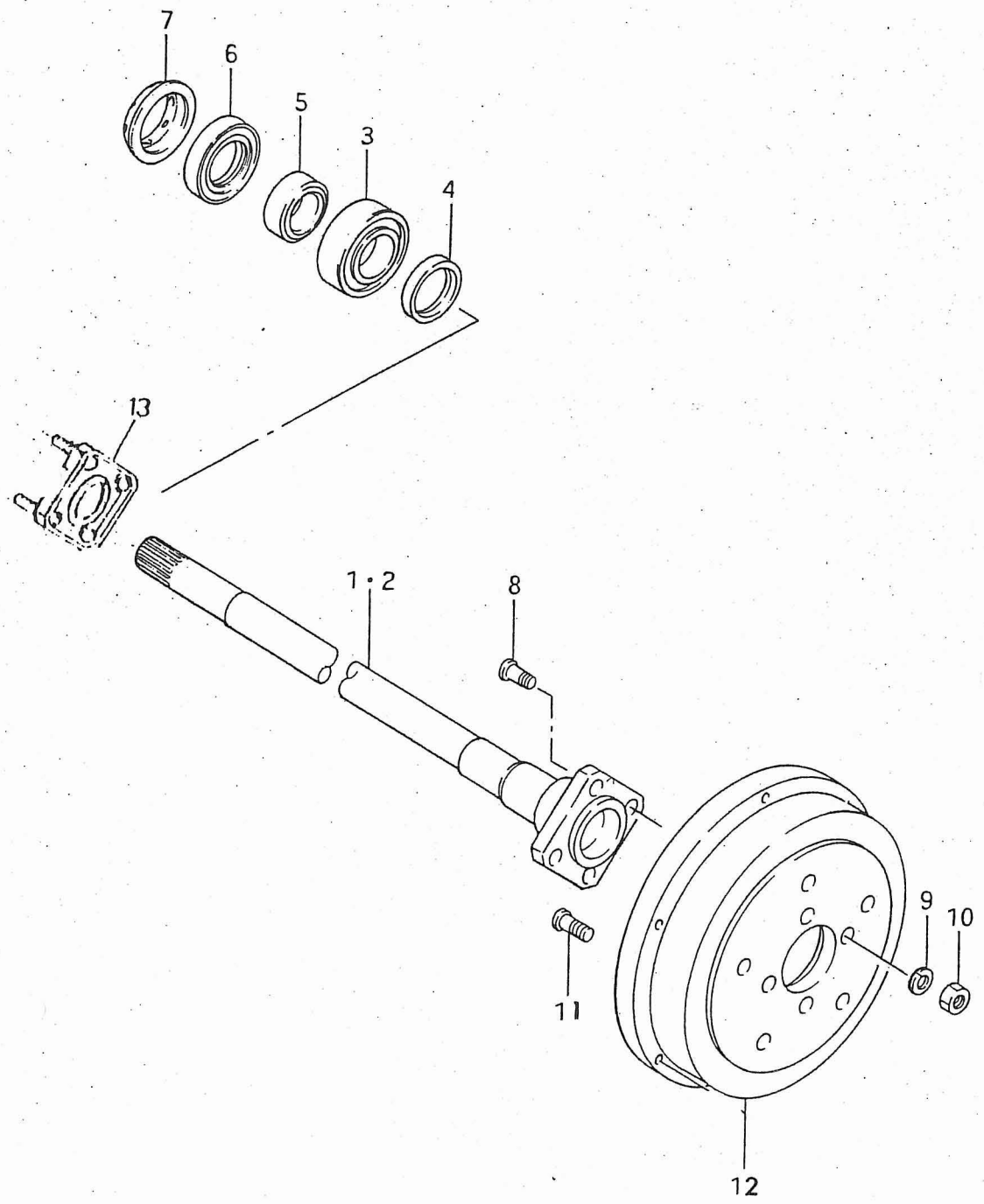

FWD

PUBLICACION N:A00523 GRUPO=CATAG SJ-413 SAMURAI SUBGRUPO=1G06SEMIEJES Y TAMBO
EDICION N: 3 GROUP=CATAG S-413 SAMURAI SUBGROUP=1G06REAR AXLE
GROUPE=CATAG SJ-413 SAMURAI SUBGROUPE=1G06DEMI-ARBRE TAMB.

N.FIG PLATE N.FIG	N.PIEZA PARTNUMBER N.PIECE	CAN QTY OUT	DENOMINACION	DESCRIPTION	DENOMINATION	OBSERVACIONES
1	44210-83300	1	PALIER TRAS LD	SHAFT REAR RH	ARBRE CD ARRIERE	
2	44220-83300	1	PALIER TRAS LI	SHAFT REAR LH	ARBRE CG ARRIERE	
3	09262A35007	2	RODAMIENTO	BEARING	ROULEMENT	
4	44131-73001	2	ESPACIADOR	SPACER	BAGUE	
5	43485-73000	2	ANILLO RETENCION	RETAINER RING	ANNEAU RETENTION	
6	09283-48007	2	RETEN	OIL SEAL	ARRETOIR	
7	43588-73000	2	PROTECTOR RETEN	PROTECTOR	PROTECTEUR	
8	09119-12003	8	TORNILLO CUBO TRAS	BOLT REAR HUB	VIS ARRIERE	
9	08321A31126	8	ARANDELA	WASHER	RONDELLE	
10	08310-11126	8	TUERCA	NUT	ECROU	
11	09119-12003	10	TORNILLO	BOLT REAR HUB	VIS ARRIERE	
12	43511A80001	2	TAMBOR FRENO	DRUM REAR BRAKE	TAMBOUR FREIN ARR	
13	53001B83040	2	CHAPA RET COJINETE	RETAINER PLATE	PLAQUE D'ARRET	

FIG.50

G - 03

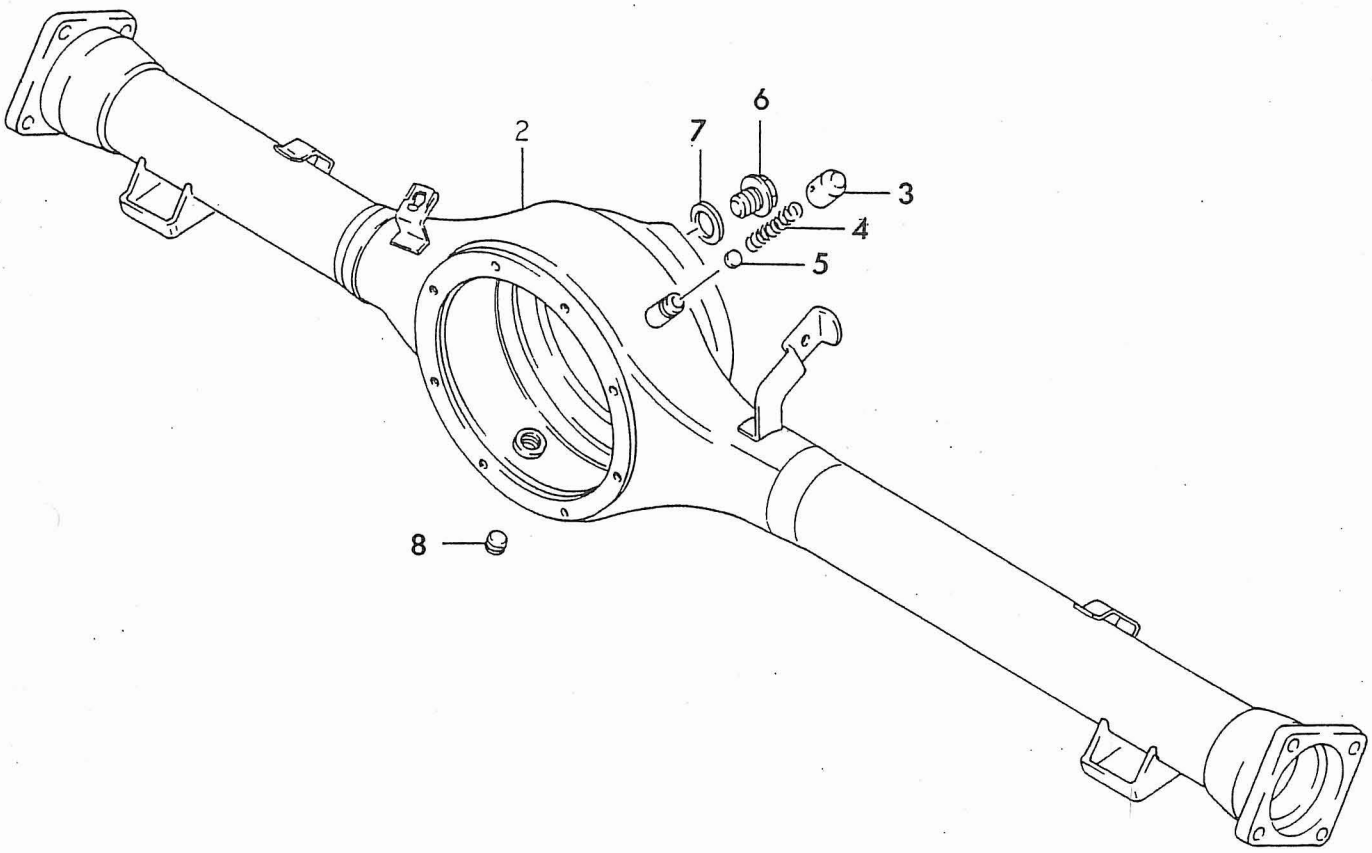

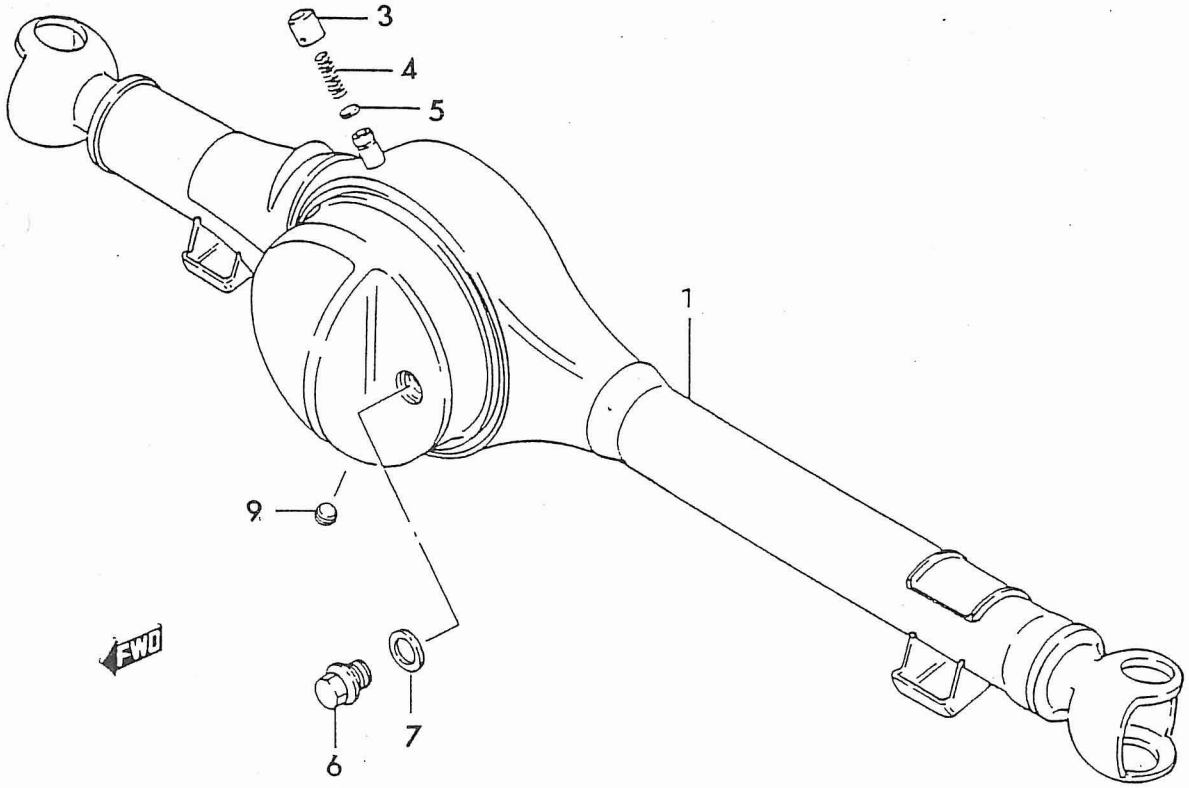

PUBLICACION N:A00523 GRUPO=CATAG SJ-413 SAMURAI SUBGRUPO=1G03CARTERES DE EJES
EDICION N: 3 GROUP=CATAG S-413 SAMURAI SUBGROUP=1G03HOUSING AXLE
GROUPE=CATAG SJ-413 SAMURAI SUBGROUPE=1G03CARTER DES PONTS

N.FIG PLATE N.FIG	N.PIEZA PARTNUMBER N.PIECE	CAN QTY OUT	DENOMINACION	DESCRIPTION	DENOMINATION	OBSERVACIONES
1	46480-83303	1	CARTER DELANTERO	FRONT AXLE	CARTER AVANT	
2	46510A70A00	1	CARTER TRASERO	REAR AXLE	CARTER ARRIERE	
3	46541-52002	2	TAPON RESPIRADERO	CAP BREATHER	BOUCHON	
4	09440-12004	2	MUELLE	SPRING	RESSORT	
5	46542-52000	2	VALVULA	VALVE	SOUPPAPE	
6	09247-20001	2	TAPON NIVEL ACEITE	PLUG OIL LEVEL	BOUCHON	
7	09168-20002	2	JUNTA	GASKET	JOINT	
8	09246-16010	1	TAPON DRENAJE	PLUG DRAIN	BOUCHON	
9	09246-16009	1	TAPON VACIADO	PLUG DRAIN	BOUCHON	

FIG.51

G - 07

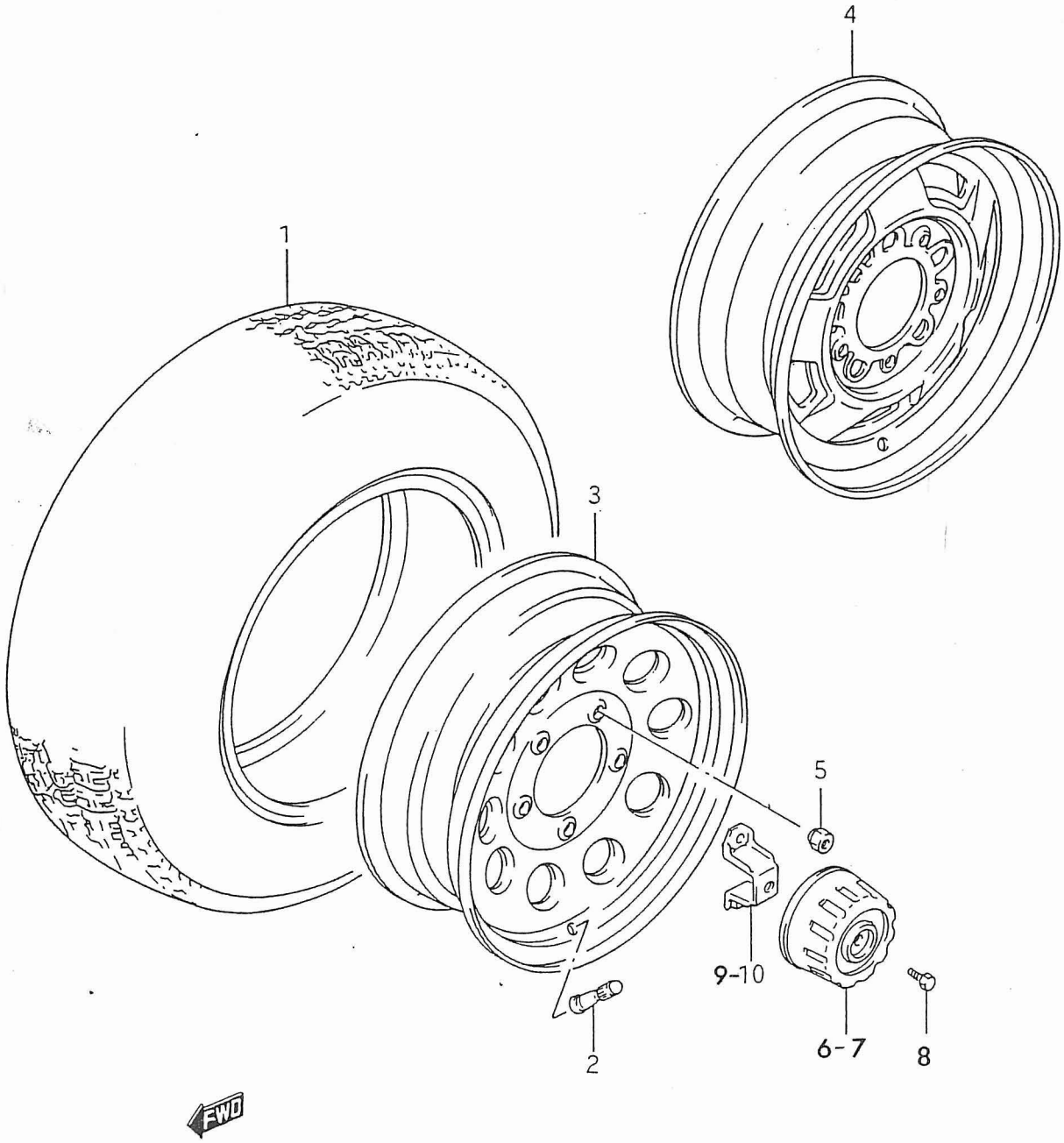

PUBLICACION N:A00523 GRUPO=CATAG SJ-413 SAMURAI SUBGRUPO=1G07RUEDAS-NEUMATICO
EDICION N: 3 GROUP=CATAG S-413 SAMURAI SUBGROUP=1G07TIRES -WHEEL
GROUPE=CATAG SJ-413 SAMURAI SUBGROUPE=1G07ROUE ET PNEUMAT.

N.FIG PLATE N.FIG	N.PIEZA PARTNUMBER N.PIECE	CAN QTY OUT	DENOMINACION	DESCRIPTION	DENOMINATION	OBSERVACIONES
1	43100-70A00	5	NEUMATICO DUNLOP	TIRE DUNLOP	PNEUMATIQUE DUNLOP	
	43110A70A00	5	NEUMATICO MICHELIN	TIRE MICHELIN	PNEUMATIQUE MICHELIU	
	43110B70A00	5	NEUMATICO PIRELLI	TIRE PIRELLI	PNEUMATIQUE PIRELLI	
	43110C70A00	5	NEUMATICO FIRESTONE	TIRE FIRESTONE	PNEUMATIQUE FIRESTON	
2	43130A78030	5	VALVULA	VALVE FIRESTONE	VALVE FIRESTONE	
3	43210A70A00	5	DISCO RUEDA	WHEEL DISC	DISQUE ROUE	
4	43210B70A00	5	DISCO RUEDA	WHEEL DISC	04FRANCIA	FRANCIA
5	09140-12026	20	TUERCA	NUT	ECROU	
6	00000A00256	1	JUEGO 4 EMBELLECEDOR	TRIM SET 4	JEU 4 ENJOLIVEURS	
7	43252-80000	4	EMBELLECEDOR	TRIM	ENJOLIVEURS	
8	09100-08253	4	TORNILLO	BOLT	VIS	
9	43261-80000	2	SUPORTE DELANTERO	HUB CAP FRONT	SUPPORT AVANT	
10	43271-80000	2	SUPORTE TRASERO	HUB CAP REAR	SUPPORT ARRIERE	

FIG. 52

H - 02

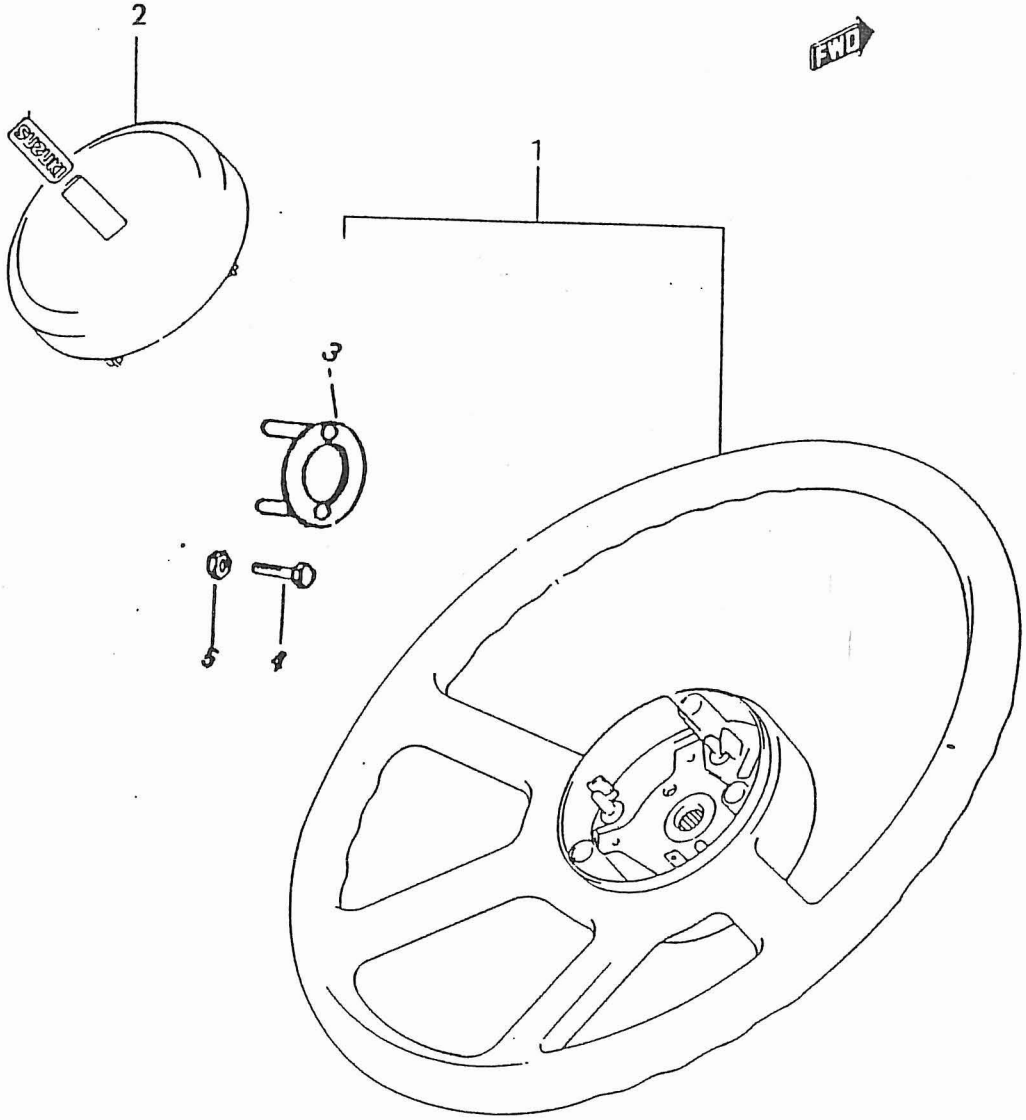

PUBLICACION N:A00523 GRUPO=CATAG SJ-413 SAMURAI SUBGRUPO=1H02VOLANT DIRECCION
EDICION N: 3 GROUP=CATAG S-413 SAMURAI SUBGROUP=1H02WHEEL STEERING
GROUPE=CATAG SJ-413 SAMURAI SUBGROUPE=1H02VOLANT DIRECTION

N.FIG PLATE N.FIG	N.PIEZA PARTNUMBER N.PIECE	CAN QTY OUT	DENOMINACION	DESCRIPTION	DENOMINATION	OBSERVACIONES
1	48110A70A00	1	VOLANTE GRIS	WHEEL STEERIN GRAY	VOLANT DIRECTION GRI	
	48110B70A00 F.U.	1	VOLANTE DIR MARRON	WHEEL STER BROWN	VOLANT MARRON	
2	48120A70A00	1	TAPA SUZUKI GRIS	COVER GRAY SUZUKI	COUVERC GRIS SUZUKI	
	48120B70A00	1	TAPA MARRON	COVER BROWN SUZUKI	COUVERC.MARRON SUZUK	
	48120C70A00	1	TAPA SANTANA GRIS	COVER SANTAN GRAY	COVERC.SANTANA GRIS	FRANCIA
	48120D70A00	1	TAPA SANTANA MARRON	COVER SANTANA BROWN	COUVERC SANTANA MARR	FRANCIA
3	48113A73030	1	GOLPEADOR	STRIKER	AMORTISSEUR	
4	02112-05106	1	TORNILLO	BOLT	VIS	
5	04001-00000	1	TUERCA	NUT	ECROU	

FIG.53

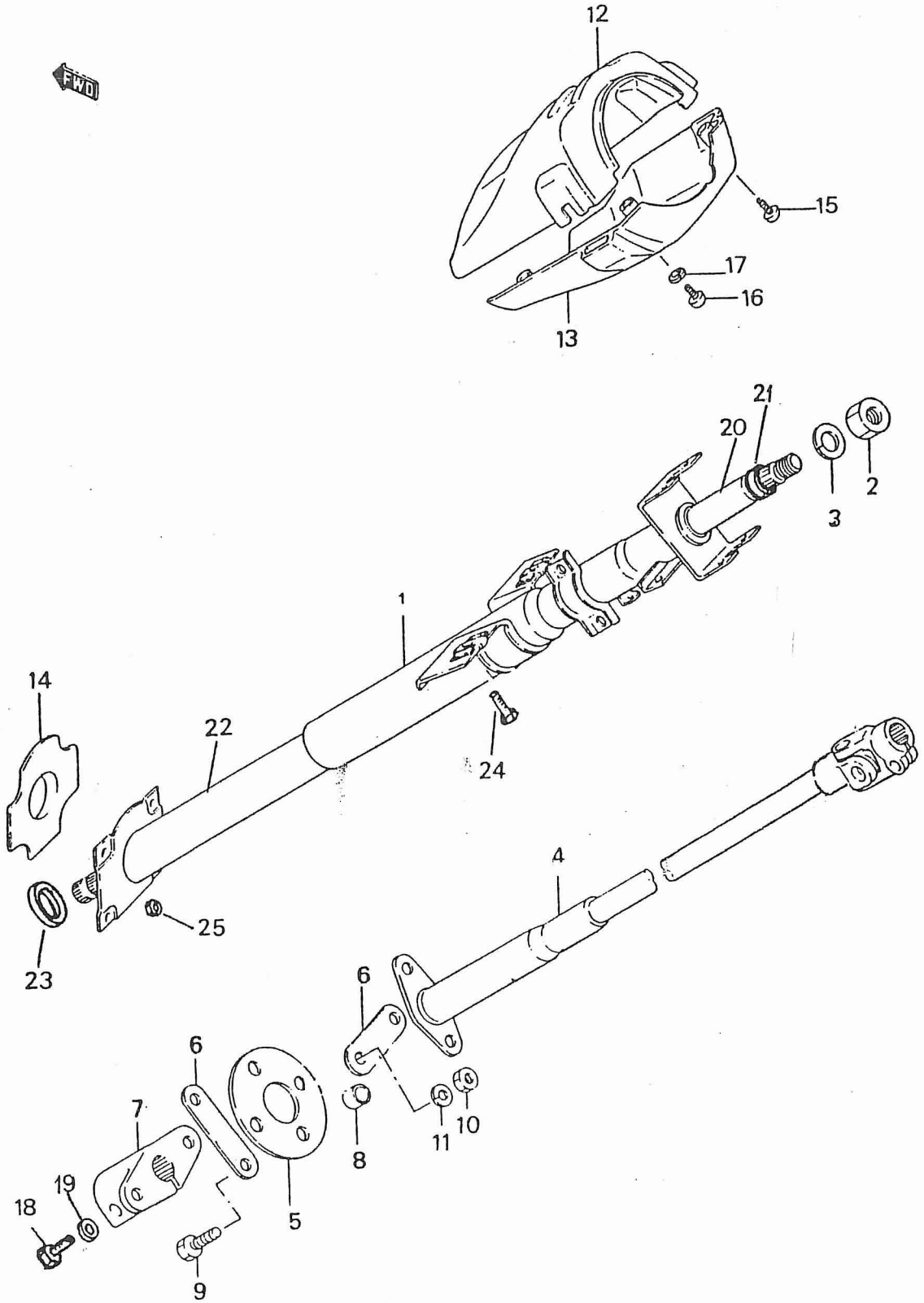

PUBLICACION N:A00523 GRUPO=CATAG SJ-413 SAMURAI SUBGRUPO=1H03COLUMNA DIRECCIO
EDICION N: 3 GROUP=CATAG S-413 SAMURAI SUBGROUP=1H03COLUMN STEERING
GROUPE=CATAG SJ-413 SAMURAI SUBGROUPE=1H03COLONNE DIRECT.

N.FIG PLATE N.FIG	N.PIEZA PARTNUMBER N.PIECE	CAN QTY OUT	DENOMINACION	DESCRIPTION	DENOMINATION	OBSERVACIONES
1	48200B80210	1	COLUMNA DIRECCION	STERING COLUMNA	COLONNE DIRECTION	
2	00000A00122	1	TUERCA M12X1 2	NUT	ECROU	
3	00000A00123	1	ARANDELA	WASHER	WASHER	
4	48220A80110	1	EJE INF VOLANTE	SHAFT STEERING	ARBRE DIRECTION	
5	48251-52000	1	JUNTA FLEXIBLE	JOINT RUBBER	JOINT CAOUTCHOUC	
6	48262-58000	2	PLACA	PLATE	PLAQUE	
7	48270-80000	1	BRIDA	FLANGE	BRIDE	
8	09180-08007	4	CASQUILLO	SPACER	BAGUE	
9	01107-08256	4	TORNILLO	BOLT	VIS	
10	08310-11086	4	TUERCA	NUT	ECROU	
11	08321B31086	4	ARANDELA	WASHER	RONDELLE	
12	48411C80350	1	CUBIERTA SUP.GRIS	COVER UPPER GRAY	COUVERC.SUP. GRIS	
	48411D80350	1	CUBIERTA SUP.MARRON	COVER UPPER BROWN	COUVERC.SUP.MARRON	
13	48421C80300	1	CUBIERTA INF.GRIS	COVER LOWER GRAY	COUVERC.INF.GRIS	
	48421D80300	1	CUBIERTA INF.MARRON	COVER LOWER BROWN	COUVERC.INF.MARRON	
14	48491-80000	1	RETEN	SEAL RUBBER	ARRETOIR CAOUTCHOUC	
15	03211-05166	5	TORNILLO	SCREW	VIS	
16	02112-05105	3	TORNILLO	SCREW	VIS	
17	08322-21056	3	ARANDELA	WASHER	RONDELLE	
18	09111-08066	2	TORNILLO	BOLT	VIS	
19	08321B31086	1	ARANDELA	WASHER	RONDELLE	
20	00000A00260	1	SUB CONJ EJE	FRONT AXLE SUB-ASSY	ENS AXE	
21	00000A00261	1	CASQUILLO	BUSH GUIDE	BAGUE	
22	00000A00257	1	TUBO Y RODAMIENTO	UPPER SUB-ASSY	ENS SUPERIEUR	
23	00000A00262	1	ANILLO SEGURIDAD	SECURITY RING	ANNEAU SECURITE	
24	09103A08152	2	TORNILLO	BOLT	VIS	
25	08316A16086	4	TUERCA	NUT	ECROU	

FIG.53

POS Nº	REFERNCIA	DENOMINACION	CANTIDAD	OBSERVACIONES
4	48220B80110	CONJUNTO EJE INF. COLUMNA	1	→F.U.
4.1	08321B31083	ARANDELA	1	
4.2	09100-08218	TORNILLO	1	
4.3	48230-80100	ARTICULACIÓN	1	
4.4	48251-52000	JUNTA GOMA DE DIRECCION	1	
4.5	09180-08007	CASQUILLO DISTANCIADOR	4	
4.6	48220-80120	EJE DE DIRECCIÓN	1	
4.7	48262-58001	PLACA JUNTA DE GOMA	2	
4.8	48270-80010	BRIDA ROTULA DE DIRECCIÓN	1	
4.9	01500-08253	TORNILLO	4	
4.10	08310-00083	TUERCA	4	
4.11	08321-01083	ARANDELA	4	

SJ-003/04-G

FIG.54

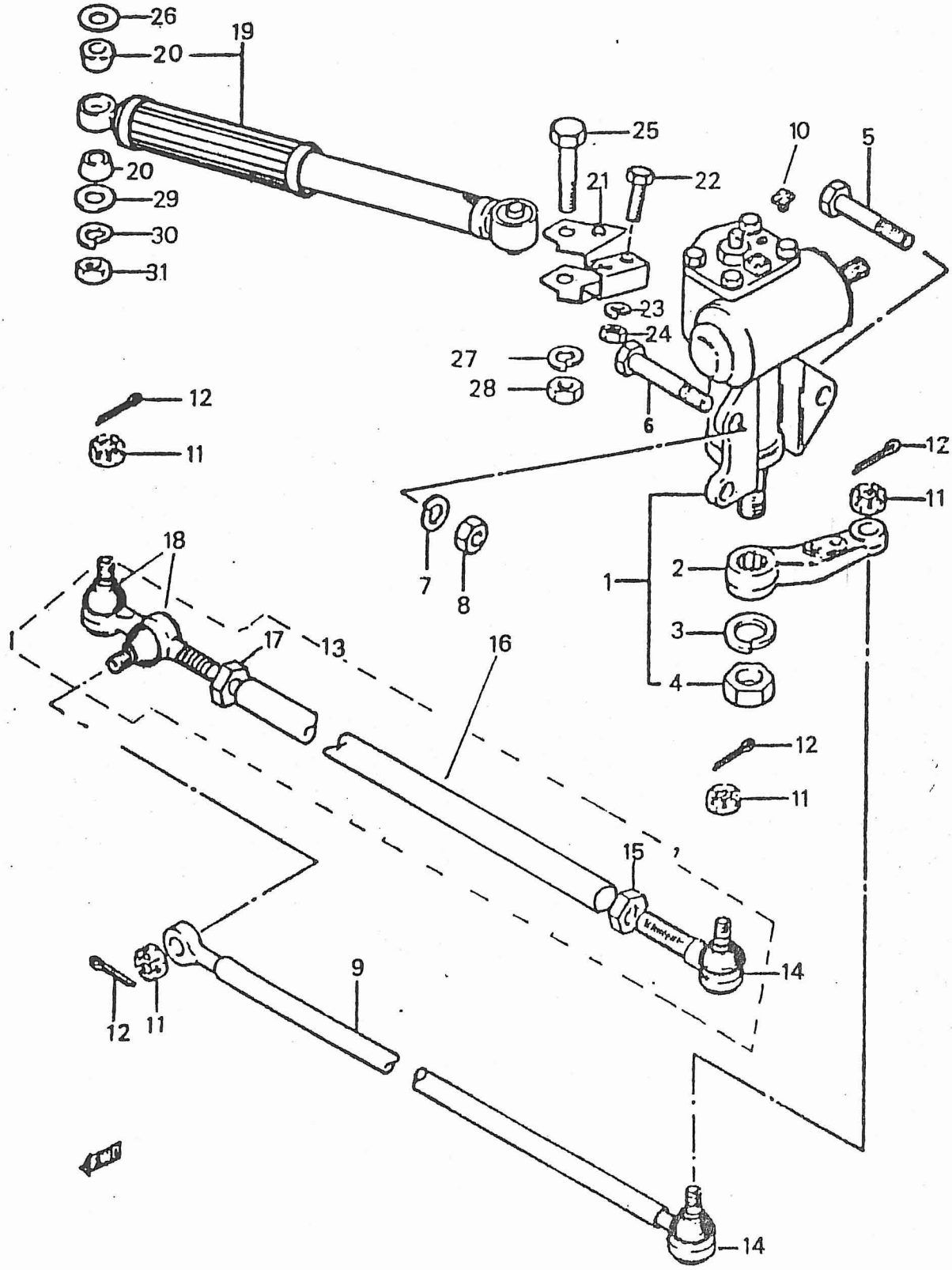
26
19
20
20
29
30
31
25
10
5
21
22
23
24
27
28
6
12
11
12
11
7
8
1
2
3
4
18
17
13
16
12
11
15
14
9
12
11
14

PUBLICACION N:A00523 GRUPO=CATAG SJ-413 SAMURAI SUBGRUPO=1H04BARRAS DIRECCION
EDICION N: 3 GROUP=CATAG S-413 SAMURAI SUBGROUP=1H04ROD-BAR STEERING
GROUPE=CATAG SJ-413 SAMURAI SUBGROUPE=1H04BARRES DIRECTION

N.FIG PLATE N.FIG	N.PIEZA PARTNUMBER N.PIECE	CAN QTY OUT	DENOMINACION	DESCRIPTION	DENOMINATION	OBSERVACIONES
1	48600-80060	1	CONJ CAJA DIRECCION	STEERING BOX ASSY	ENS BOITE DIRECTION	
2	48671-80060	1	BIELA DIRECCION	ARM PITMAN	LAVIER DIRECTION	
3	08321-21208	1	A GROWER	WASHER	RONDELLE	
4	48674-80060	1	TUERCA	NUT	ECROU	
5	01107-12703	1	TORNILLO	BOLT	VIS	
6	01107-12903	2	TORNILLO	BOLT	VIS	
7	08321A31123	3	ARANDELA	WASHER	RONDELLE	
8	08310-11123	3	TUERCA	NUT	ECROU	
9	48900A83301	1	BARRA MANDO DIREC	ROD ASSY	BARRE DIRECTION	
10	48633-67011	1	TAPON RESPIRADERO	PLUG BREATHER	BOUCHON	
11	08314-41123	4	TUERCA	NUT	ECROU	
12	04111-30256	4	PASADOR	COTTER PIN	CLAVETTE	
13	48800A70A60	1	BARRA RUEDA RUEDA	TIE ROD STEERING	BARRE ROUE ROUE	
14	48810A80000	1	ROTULA EXTREMO BARRA	ROD END	ROTULE FINALE BARRE	
15	00000A00129	1	TUERCA ROSCA DCHA	NUT RH THREADS	ECROU	
16	48843A70A00	1	TUBO CENTRAL	CENTER PIPE	TUYAU CENTRALE	
17	00000A00127	1	TUERCA ROSCA IZDA	NUT LH THREADS	ECROU	
18	48870A80060	1	ROTULA DOBLE	DOUBBLE TIE ROD	ROTULE DUBLE	
19	48730B80010	1	AMORTIGUADOR DIRECCI	DAMPER TIE ROD	AMORTISSEUR DIRECTIO	
20	41681A58040	2	GOMA AMORTIGUADOR	RUBBER BUSH	BAGUE CAOUTCHOUC	
21	48741-80060	1	TIRANTA AMORTIAGUADO	STAY STTERING DAMPER	TIGE AMORTISSEUR	
22	01107-08303	2	TORNILLO	BOLT	VIS	
23	08321B31086	2	ARANDELA	WASHER	RONDELLE	
24	08310-11083	2	TUERCA	NUT	ECROU	
25	01104-12553	1	TORNILLO	BOLT	VIS	
26	08322-21123	1	ARANDELA	WASHER	RONDELLE	
27	08321A31123	1	ARANDELA	WHASHER	RONDELLE	
28	08310-11123	1	TUERCA	NUT	ECROU	
29	09160-10074	1	ARANDELA	WASHER	RONDELLE	
30	08321B31103	1	ARANDELA	WASHER	RONDELLE	
31	08310-11103	1	TUERCA	NUT	ECROU	

FIG. 54-1

H·05

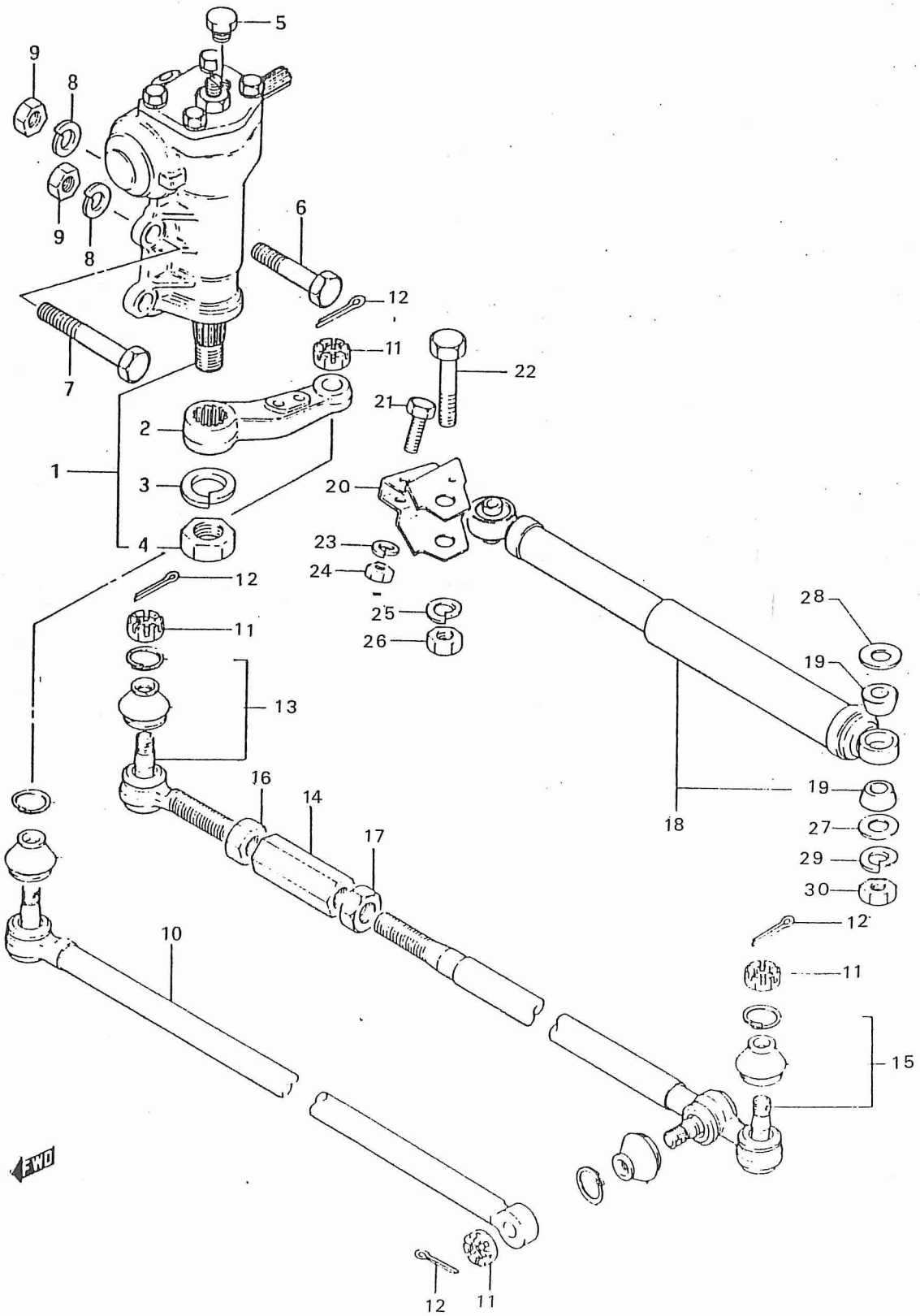
5
9
8
9
8
6
12
7
11
22
21
2
1
3
20
4
23
24
12
25
26
28
11
19
13
16
14
19
18
27
17
29
30
12
10
11
15
FWD
12
11

PUBLICACION N:A00523 GRUPO=CATAG SJ-413 SAMURAI SUBGRUPO=1H05CAJA DIRECC.U.K.
EDICION N: 3 GROUP=CATAG S-413 SAMURAI SUBGROUP=1H05STEERING LINK U.
GROUPE=CATAG SJ-413 SAMURAI SUBGROUPE=1H05BOITE DIRECT.U.K

N.FIG PLATE N.FIG	N.PIEZA PARTNUMBER N.PIECE	CAN QTY OUT	DENOMINACION	DESCRIPTION	DENOMINATION	OBSERVACIONES
1	48600-80022	1	C/CAJA DIRECCION	STEERING BOX ASSY	BOITE DIRECTION	U.K.
2	48671-80011	1	BIELA DIRECCION	04LEVER DIRECTION	LEVIER DIRECTION	U.K.
3	48644-80010	1	ARANDELA MUELLE	04WASHER	RONDELLE	U.K.
4	48674-63240	1	TUERCA	NUT	ECROU	U.K.
5	48633-67040	1	TAPON RESPIRADERO.	04 PLUG BREATHER	BOUCHON	U.K.
6	01107-12703	1	TORNILLO	04TORNILLO	VIS	U.K.
7	01107-12903	2	TORNILLO	BOLT	VIS	U.K.
9	08310-11123	3	TUERCA	04NUT	ECROU	U.K.
10	48900A70A01	1	BARRA DE MANDO	04 BAR MAIN	BARRE DIRECTION	U.K.
11	08314-41123	4	TUERCA	04NUT	ECROU	U.K.
12	04111-30256	4	PASADOR	04 PIN	CLAVETTE	U.K.
13	48810-60A00	1	ROTULA EXTREMO BARRA	04 ROD END	ROTULE FINALE	U.K.
14	48836-70A00	1	CONECTOR BARRA	04CONNECTOR TIE ROD	CONNECTEUR BARRE	U.K.
15	48870-70A02	1	BARRA ACOPLAMIENTO	04TIE ROD STEERING	BARRE COUPLING	U.K.
16	48837-70A00	1	TUERCA DCHAS	04 NUT	ECROU CD	U.K.
17	48838-70A00	1	TUERCA IZDAS	04 NUT	ECROU CG	U.K
18	48730B80010	1	AMORTIGUADOR	04 SHOCK ABSERVER	AMORTISSEUR	U.K.
19	41681A58040	2	CASQUILLO GOMA	04 BUSHING RUBBER	BAGUE CAOUTCHOUC	U.K.
20	48741-80000	1	TIRANTA AMORTIGUADOR	04STAY SHOCK	TIGE AMORTISSEUR	U.K.
21	01107-08303	2	TORNILLO	BOLT	VIS	U.K.
22	01104-12553	1	TORNILLO	BOLT	VIS	U.K.
23	08321A31083	2	A,MUELLE	04 WASHER	RONDELLE	U.K.
24	08310-11083	2	TUERCA	04 NUT	ECROU	U.K.
25	08321A31103	1	A.MUELLE	04 WASHER	RONDELLE	U.K.
26	08310-11123	1	TUERCA	04NUT	ECROU	U.K.
27	09160-10074	1	ARANDELA	04 WASHER	RONDELLE	U.K.
28	08322-21123	1	A.PLANA	04WASHER	RONDELLE	U.K.
29	08321-31003	1	A.GROWER	WASHER	RONDELLE	U.K.
30	08310-11103	1	TUERCA	04 NUT	ECROU	U.K.

FIG.55

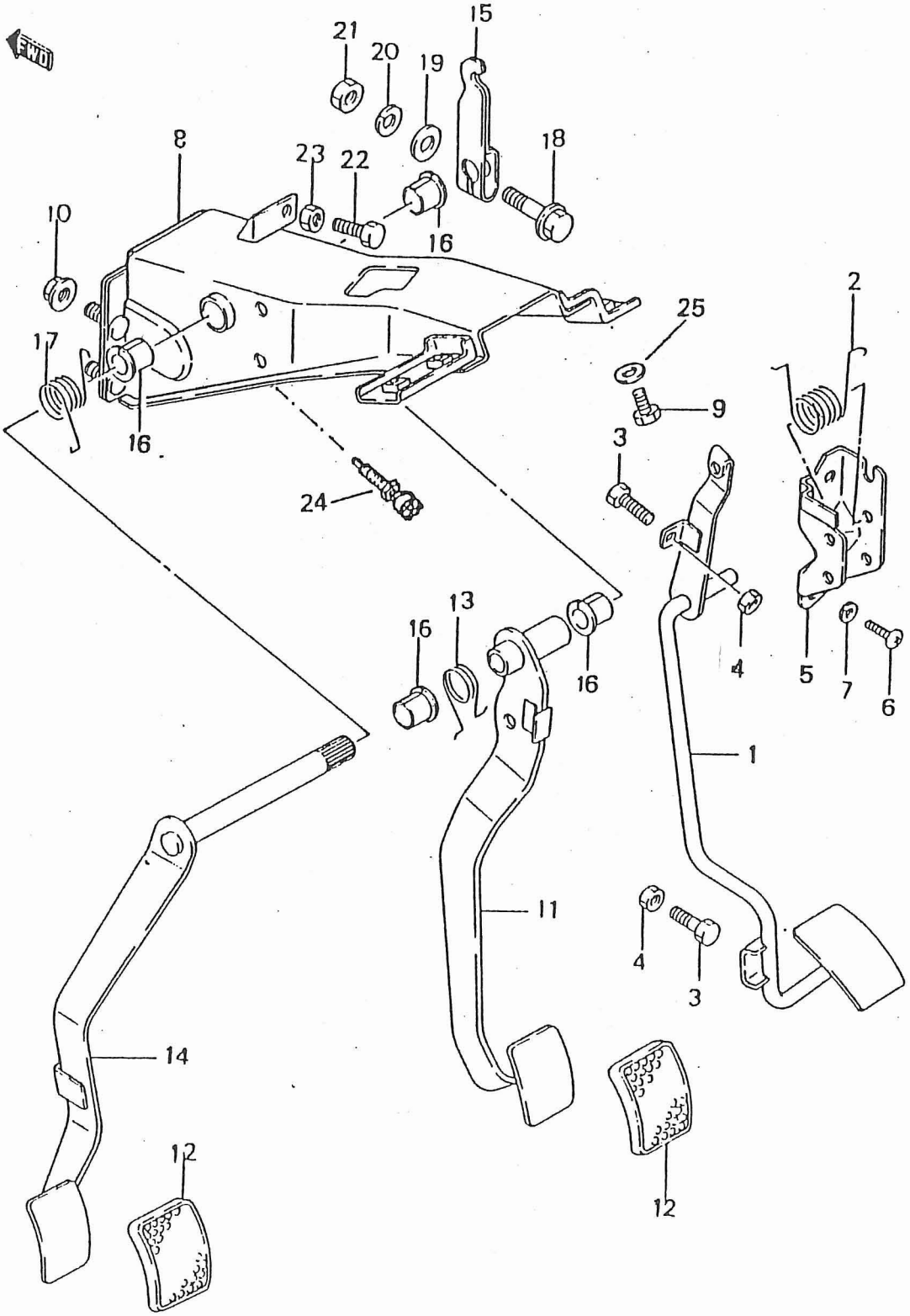
FWD
21
20
19
15
8
23
22
18
10
16
2
25
17
9
16
3
24
13
16
16
4
5
7
6
1
11
4
3
14
12
12

PUBLICACION N:A00523 GRUPO=CATAG SJ-413 SAMURAI SUBGRUPO=1I02PEDALES C.IZQUIE
EDICION N: 3 GROUP=CATAG S-413 SAMURAI SUBGROUP=1I02PEDAL
GROUPE=CATAG SJ-413 SAMURAI SUBGROUPE=1I02ENS.PEDALES C/G

N.FIG PLATE N.FIG	N.PIEZA PARTNUMBER N.PIECE	CAN QTY OUT	DENOMINACION	DESCRIPTION	DENOMINATION	OBSERVACIONES
1	49410-83011	1	PEDAL ACELERADOR	PEDAL ACELERATION	PEDALE ACCELERATION	
2	09448-21003	1	MUELLE PEDAL	SPRING	RESSORT PEDALE	
3	09100-06055	2	TORNILLO	BOLT	VIS	
4	08310-22066	2	TUERCA	NUT	ECROU	
5	49511-80110	1	SOPORTE PEDAL	PEDAL SUPPORT	SUPPORT PEDALE	
6	02112-06126	2	TORNILLO	BOLT	VIS	
7	08321A31066	2	ARANDELA	WASHER	RONDELLE	
8	49710A83010	1	SOPORTE PEDAL	SUPPORT PEDAL	SUPPORT PEDALE	
	49710B80110	1	SOPORTE SERVO	SUPPORT SERVO	SUPPORT SERVO	
9	01107-08206	2	TORNILLO	BOLT	VIS	
10	08316A16086	2	TUERCA	NUT	ECROU	
11	49610-80110	1	PEDAL DE FRENO	BRAKE PEDAL	PEDAL FREIN	
12	49751-79001	1	GOMA PEDAL FRENO	RUBBER	CAOUTCHOUC	
13	09448-31030	1	MUELLE PEDAL	SPRING	RESSORT	
14	49810-80110	1	PEDAL EMBRAGUE	CLUTCH PEDAL	PEDAL EMBRAYAGE	
15	49821-80110	1	BRAZO EJE	ARM SHATF	LEVIER AXE	
16	09306-14004	4	CASQUILLO EJE PEDAL	BUSH	BAGUE	
17	09448-30010	1	MUELLE	SPRING	RESSORT	
18	01517-08356	1	TORNILLO	BOLT	VIS	
19	02009-00000	1	ARANDELA	WASHER	RONDELLE	
20	08321B31086	1	ARANDELA	WASHER	RONDELLE	
21	08310-11086	1	TUERCA	NUT	ECROU	
22	09100-06055	1	TORNILLO	BOLT	VIS	
23	08310-11066	1	TUERCA	NUT	ECROU	
24	37740A66010	1	INTERRUPTOR PARE	SWITCH	INTERRUPTEUR	
25	09160T08075	2	ARANDELA	WASHER	RONDELLE	
26	08321A31086	2	ARANDELA	WASHER	RONDELLE	
27	09251-09002	1	TOPE	STOPPER	BUTEE	

FIG. 56

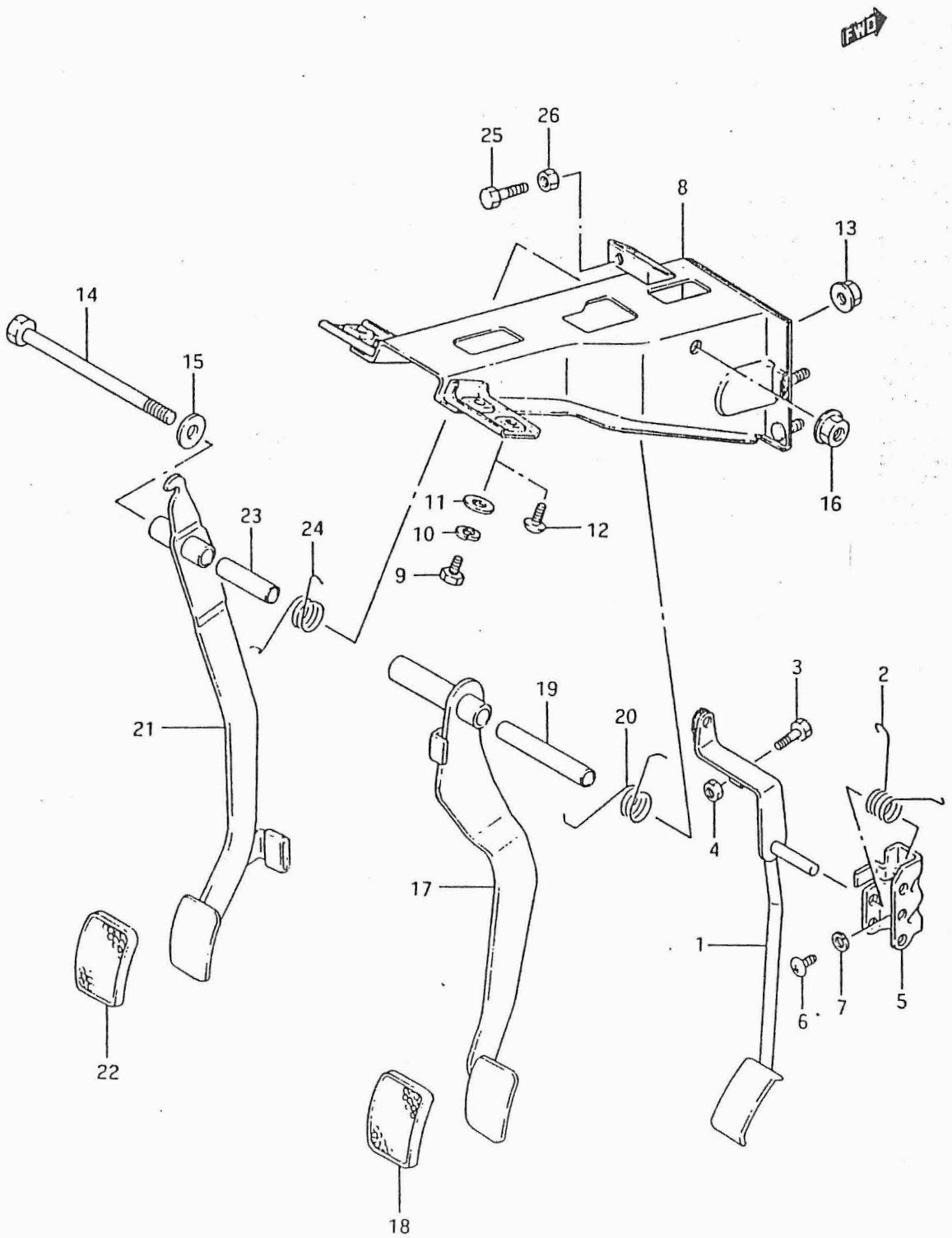

PUBLICACION N:A00523 GRUPO=CATAG SJ-413 SAMURAI SUBGRUPO=1I03PEDALES C.DERECH
EDICION N: 3 GROUP=CATAG S-413 SAMURAI SUBGROUP=1I03PEDAL U.K.
GROUPE=CATAG SJ-413 SAMURAI SUBGROUPE=1I03PEDALES U.K.

N.FIG PLATE N.FIG	N.PIEZA PARTNUMBER N.PIECE		CAN QTY OUT	DENOMINACION	DESCRIPTION	DENOMINATION	OBSERVACIONES
1	49410-83000		1	PEDAL ACELERADOR	PEDAL ACCELERATOR	PEDALE ACELERATEUR	
2	09448-21003	**	1	MUELLE	SPRING	RESSORT	
3	09100-06055	**	1	TORNILLO	BOLT	VIS	
4	08310-11066	**	2	TUERCA	NUT	ECROU	
	08310-20066		2	TUERCA	NUT	ECROU	
5	49511-80100	**	1	SOPORTE PEDAL	PEDAL SUPPORT	SUPPORT PEDALE	
6	02112-06126	**	2	TORNILLO	BOLT	VIS	
7	08321A31066	**	2	ARANDELA	WASHER	RONDELLE	
8	49710A83001		1	SOPORTE PEDALES	PEDAL BRACKET	SUPPORT PEDALE	
9	01107-08206	**	2	TORNILLO	BOLT	VIS	
10	08321-21086	**	2	ARANDELA	WASHER	RONDELLE	
11	02009-00000	**	1	ARANDELA	WASHER	RONDELLE	
12	09125-08004	**	2	TORNILLO	BOLT	VIS	
13	08316A16086	**	2	TUERCA	NUT	ECROU	
14	09100-10056	**	1	TORNILLO	BOLT	VIS	
15	08322-11106	**	1	ARANDELA	WASHER	RONDELLE	
16	08316-26106	**	1	TUERCA	NUT	ECROU	
17	49610-80100	**	1	PEDAL DE FRENO	BRAKE PEDAL	PEDALE FREIN	
18	49751-79001	**	1	GOMA	RUBBER	CAOUTCHOUC	
19	09180-10097	**	1	CASQUILLO	BUSH	BAGUE	
20	09448-31029	**	1	MUELLE	SPRING	RESSORT	
21	49810-80100	**	1	PEDAL EMBRAGUE	CLUCH PEDAL	PEDALE EMBRAYAGE	
22	49751-79001	**	1	GOMA	RUBBER	CAOUTCHOUC	
23	09180-10018	**	1	CASQUILLO	BUSH BAGUE	BAGUE	
24	09448-29004	**	1	MUELLE	SPRING	RESSORT	
25	08310-11066	**	1	TUERCA	NUT	ECROU	
	09100-06055	**	1	TORNILLO	NOLT	VIS	
26	09251-09002		1	TOPE	STOPPER	CHOC	

FIG. 57

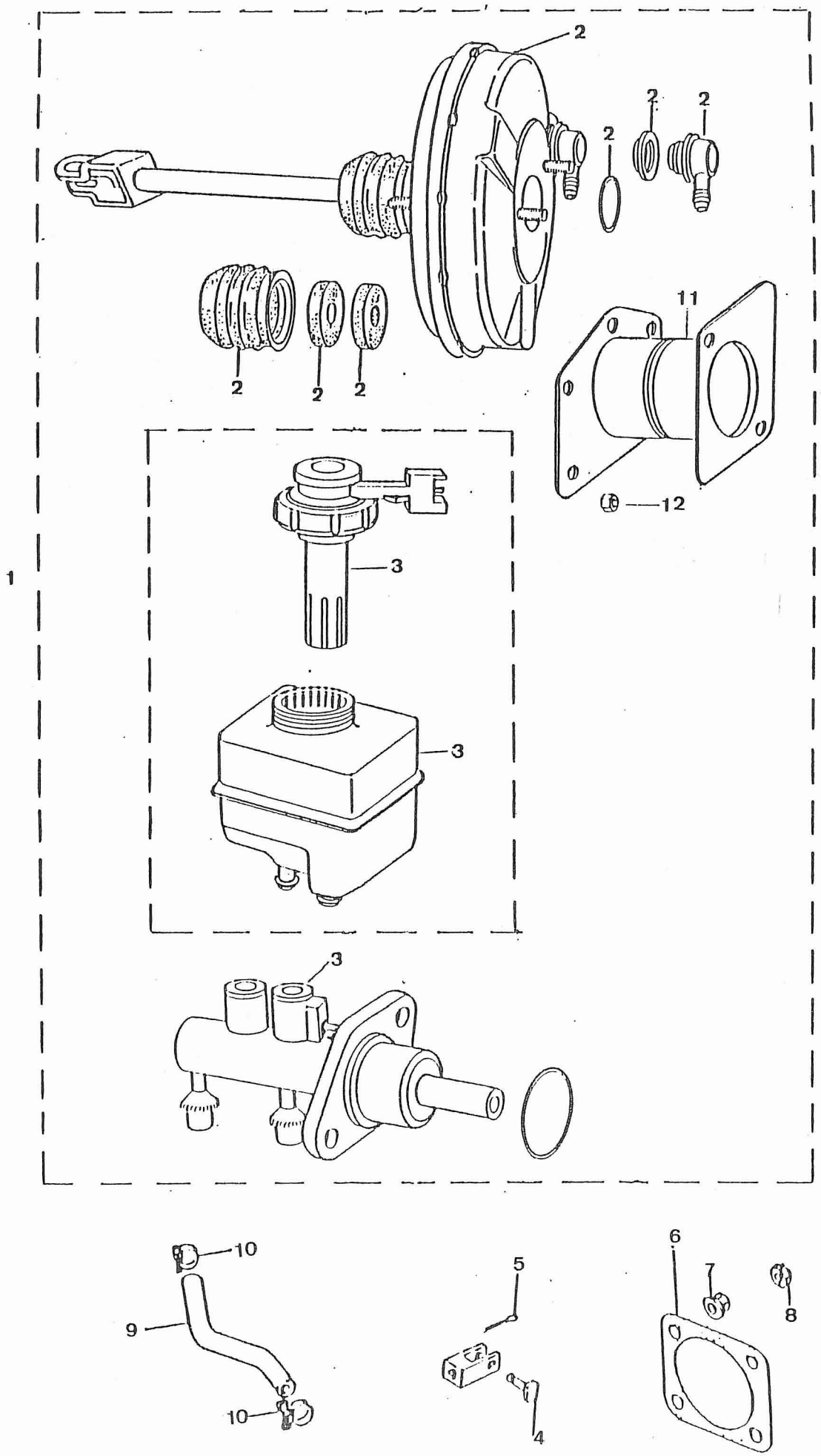

PUBLICACION N:A00523 GRUPO=CATAG SJ-413 SAMURAI SUBGRUPO=1I04 SERVO GIRLING
EDICION N: 3 GROUP=CATAG S-413 SAMURAI SUBGROUP=1I04SERVO GIRLING
GROUPE=CATAG SJ-413 SAMURAI SUBGROUPE=1I04SERVO FREIN

N.FIG PLATE N.FIG	N.PIEZA PARTNUMBER N.PIECE	CAN QTY OUT	DENOMINACION	DESCRIPTION	DENOMINATION	OBSERVACIONES
1	51000B83170	1	SERVO Y CILINDRO	SERVO & CYLINDER	SERVO ET CYLINDRE	
	51100C83170	1	SERVO Y CILINDRO	SERVO & CYLINDER	SERVO ET CYLINDRE	U.K.
2	00000A00466	1	JUEGO REPARAC SERVO	SET REPAIR SERVO	JEU REPARAT SERVO	
	00000A00478	1	SERVO SOLO	SERVO ONLY	SERVO	
3	00000A00283	1	TAPON C/INTERRUPT	CAP W/SWITCH	BOUCHON C/INTERRUP	
	00000A00467	1	DEPOSITO	TANK	RESERVOIR	
	00000A00479	1	CILINDRO FRENO	CYLINDER BRAKE	CYLINDRE FREIN	
4	09200-10010	1	PASADOR CILINDRO	PIN	AXE	
5	04111-25206	1	PASADOR ALETAS	COTTER PIN	GOUPILLE	
6	51132A82002	1	JUNTA SERVO	GASKET BRAKE MASTER	JOINT SERVO	
7	08310-12086	4	TUERCA	NUT	ECROU	
8	08321B31086	4	ARANDELA	WASHER	RONDELLE	
9	51010A83010	1	TUBERIA DE VACIO	HOSE BRAKE VACUUM	TUYAU VIDANGE	
	51010A83110	1	TUBO VACIO	HOSE VACUUM	TUYAU VIDANGE	U.K.
10	09407A12402	1	ABRAZADERA	CLAMP	COLLIER	
11	45005-00000	1	SOPORTE SERVO	BRACKE SERVO	SUPPORT SERVO	
12	04004-00000	2	TUERCA	NUT	ECROU	

FIG. 58

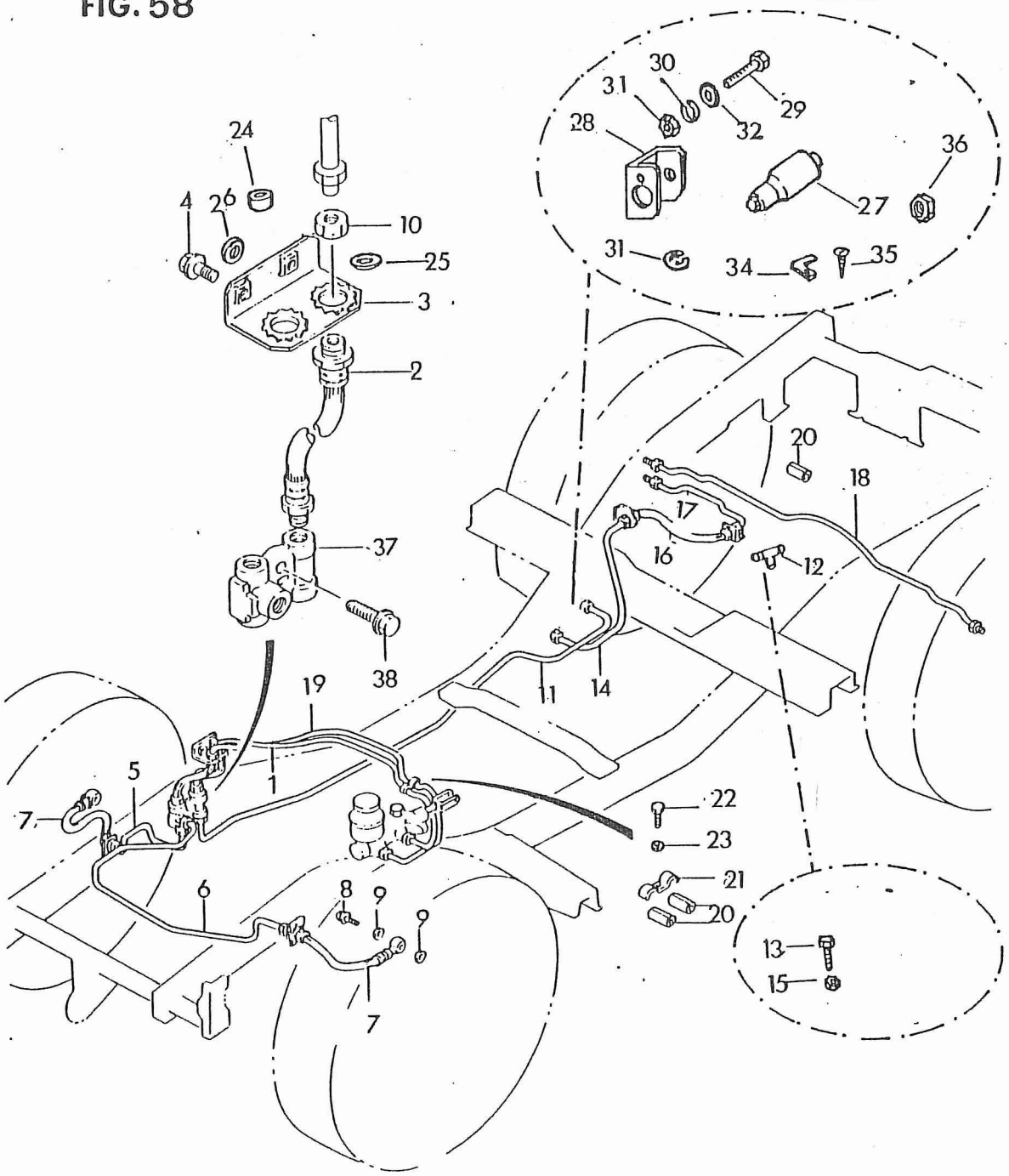
24
4
26
10
25
3
2
37
38
19
1
5
7
6
8
9
9
7
30
31
29
28
32
36
27
31
34
35
20
18
17
16
12
11
14
22
23
21
20
13
15

FWD

PUBLICACION N:A00523 GRUPO=CATAG SJ-413 SAMURAI SUBGRUPO=1I05TUBERIAS FRENOS
EDICION N: 3 GROUP=CATAG S-413 SAMURAI SUBGROUP=1I05PIPES BRAKE
GROUPE=CATAG SJ-413 SAMURAI SUBGROUPE=1I05TUYANTERIES FREI

N.FIG PLATE N.FIG	N.PIEZA PARTNUMBER N.PIECE	CAN QTY OUT	DENOMINACION	DESCRIPTION	DENOMINATION	OBSERVACIONES
1	51410C80060	1	TUBO CILINDRO LATIG.	PIPE CYLIND.TO HOSE	TUYAU CYLIND.A FLEX	U.K.
	51410C83100	1	TUBO DE FRENO	BRAKE PIPE	TUYAU DE FREIN	
2	51570A70A30	1	LATIGUILLO CIL DEL	HOSE CYLIND FRONT	FLEXIBLE CYLIN AVANT	
	51570B70A30	1	LATIGUILLO CIL TRAS	HOSE CYLIND REAR	FLEXIBLE CYLIN AR	
3	51712A83000	1	SOPORTE CILINDRO	BRACKET MASTER CYLIN	SUPPORT CYLINDRE	
4	01517-06166	2	TORNILLO	BOLT	VIS	
5	51420A70A00	1	TUBO FRENO CRUZ 5 T	PIPE BRAKE 5 AWAY	TUYAU FREIN 5 V	
6	51430A70A00	1	TUBO FRENO CRUZ 5 T	PIPE BRAKE 5 AWAY	TUYAU FREIN 5 T	
7	51540C80150	2	TUBO FLEXIBLE	HOSE FLEXIBLE	FLEXIBLE AVANT	
8	09360-10026	2	TORNILLO	BOLT	VIS	
9	09161-10009	4	JUNTA	GASKET	JOINT	
10	08310T24106	7	TUERCA M-10	NUT M-10	ECROU M-10	
11	51460A80420	1	TUBO CRUZ 5T VAL	PIPE BRAKE 5AWAY	TUYAU FREIN 5 T	
12	51640B80000	1	CRUZ DERIV 3 T	JOINT BRAKE 3 AWAY	CROIX FREIN 3 T	
13	01107-06206	1	TORNILLO	SCREW	VIS	
14	51360A70A10	1	TUBO VALVULA TRAS	PIPE VALVE REAR	TUYAU SOUPPAPE AR	LONG BODY
	51500A80320	1	TUBO VALV LAT DEL	PIPE VAL HOSE FR	TUYAU VAL FLEX AV	
15	08310-22066	1	TUERCA	NUT	ECROU	
16	51580B80130	2	TUBO FLEX TRASERO	HOSE REAR FLEX	FLEXIBLE ARRIERE	
17	51470A70A00	1	TUBO FRENO TRA LD	PIPE BRAKE RH	TUYAU FREIN CD	
18	51480A70A00	1	TUBO FRENO TRAS LI	PIPE BRAKE REAR LH	TUYAU FREIN AR CG	
19	51520C83010	1	TUBO FRENO TRAS	PIPE BRAKE REAR	TUYAU FREIN AR	
20	51755-67000	12	PROTECTOR TUBO	PROTECTOR PIPE	PROTECTEUR TUYAU	
21	09403-07312	4	ABRAZADERA	CLAMP	COLLIER	
22	01104-06166	3	TORNILLO	SCREW	VIS	
23	08321A31066	3	ARANDELA	WASHER	RONDELLE	
24	08310T24126	1	TUERCA M-12	NUT M-12	ECROU M-12	
25	09163T10001	7	A ESTRELLA 10 2	WASHER 10 2	RONDELLE 10 2	
26	09163T12001	1	A ESTRELLA 12 3	WASHER 12 3	RONDELLE 12 3	
27	51950A83120	1	CONJ VALVULA INERCIA	VALVE ASSY	ENS VALVE	
28	51951D83400	1	SOPORTE VALVULA	BRAKET VALVE	SUPPORT VALVE	
29	01107-06166	2	TORNILLO	BOLT	VIS	
30	08321A31066	2	ARANDELA	WASHER	RONDELLE	
31	08310-22066	2	TUERCA	NUT	ECROU	
32	08322-21066	1	ARANDELA	WASHER	RONDELLE	
33	08332T11156	1	ANILLO ELASTICO	CIRCLIP	CIRCLIP	
34	51951B83400	1	FLEJE	SPRING	RESSORT	
35	09124A35001	2	TORNILLO	SCREU	VIS	
36	09148A35001	2	TUERCA	NUT	ECROU	
37	51640A80000	1	CRUZ DERIV 5 T	JOINT BRAKE 5 AWAY	CROIX 5 V.	
38	01517-06356	1	TORNILLO	SCREW	VIS	

FIG.59

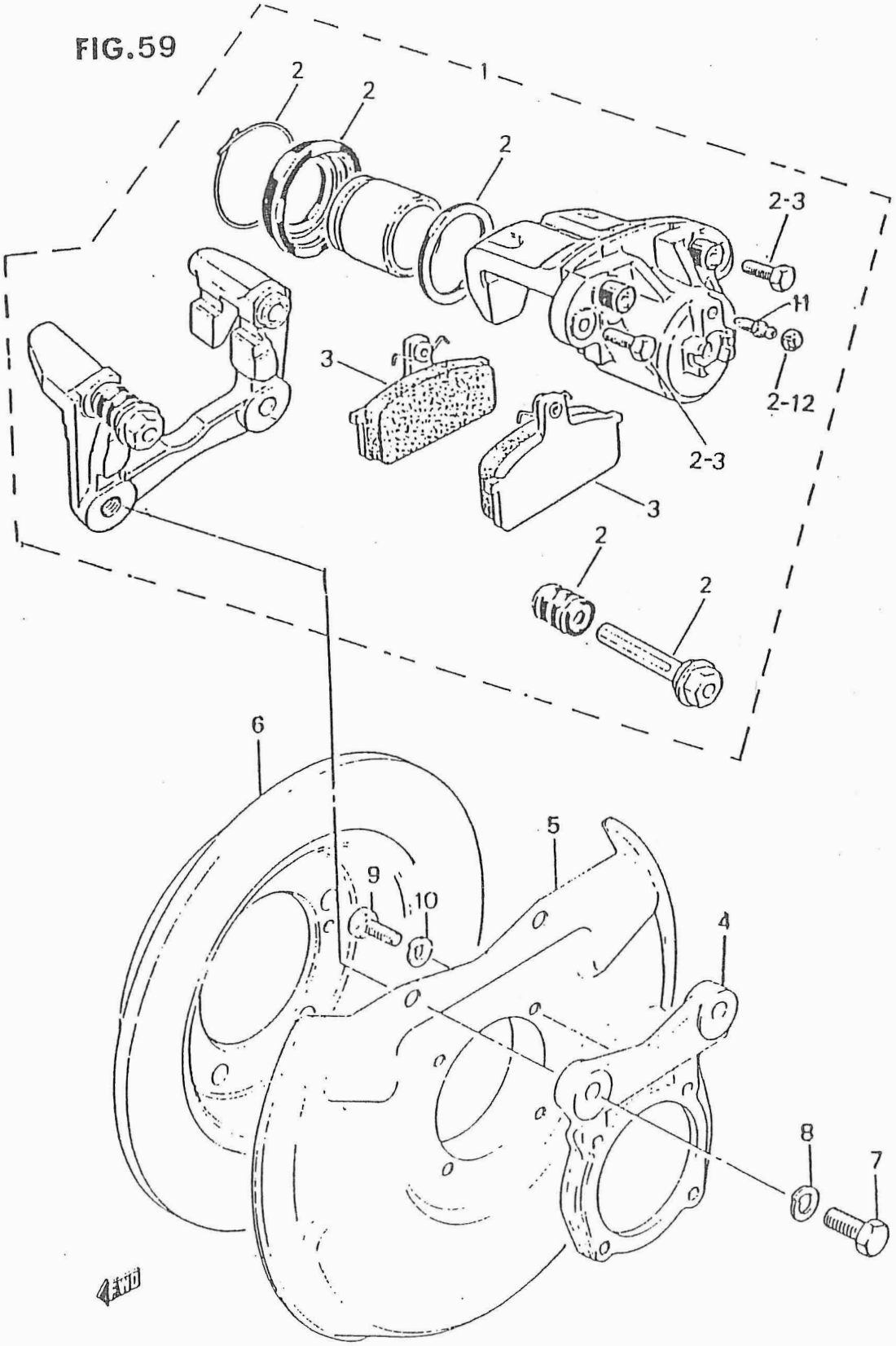

PUBLICACION N:A00523 GRUPO=CATAG SJ-413 SAMURAI SUBGRUPO=1I06FRENOS DELANTERO
EDICION N: 3 GROUP=CATAG S-413 SAMURAI SUBGROUP=1I06BRAKE FRONT
GROUPE=CATAG SJ-413 SAMURAI SUBGROUPE=1I06FREIN AVANT

N.FIG PLATE N.FIG	N.PIEZA PARTNUMBER N.PIECE	CAN QTY OUT	DENOMINACION	DESCRIPTION	DENOMINATION	OBSERVACIONES
1	55100A80010	2	CONJ FRENO DELANTERO	DISC BRAKE ASSY	ENS FREIN DISQUE	
2	00000A00153	1	REPARACION JUEGO	REPAIR KIT	NECESAIRE REPARATION	
3	00000A00154	1	JUEGO PASTILLAS	REPAIR KIT	NECESAIRE REPARATION	
4	55311-80000	2	SOPORTE FRENO	SUPPORT CALIPER	SUPPORT FREIN	
5	55221-80000	2	CUBIERTA DISCO	COVER DUST	COUVERTURE	
6	55211-80000	2	DISCO FRENO	DISC FRONT	DISQUE FREIN	
7	09100A12111	4	TORNILLO	BOLT	VIS	
8	08321A31123	4	ARANDELA	WASHER	RONDELLE	
9	09100-10023	8	TORNILLO	BOLT	VIS	
10	08321B31103	9	ARANDELA	WASHER	RONDELLE	
11	00000A00236	1	TORNILLO SANGRADOR	SCREW BLEEDER	VIS	
12	00000A00291	1	TAPON	BLEEDER PLUG	BOUCHON	

FIG. 60

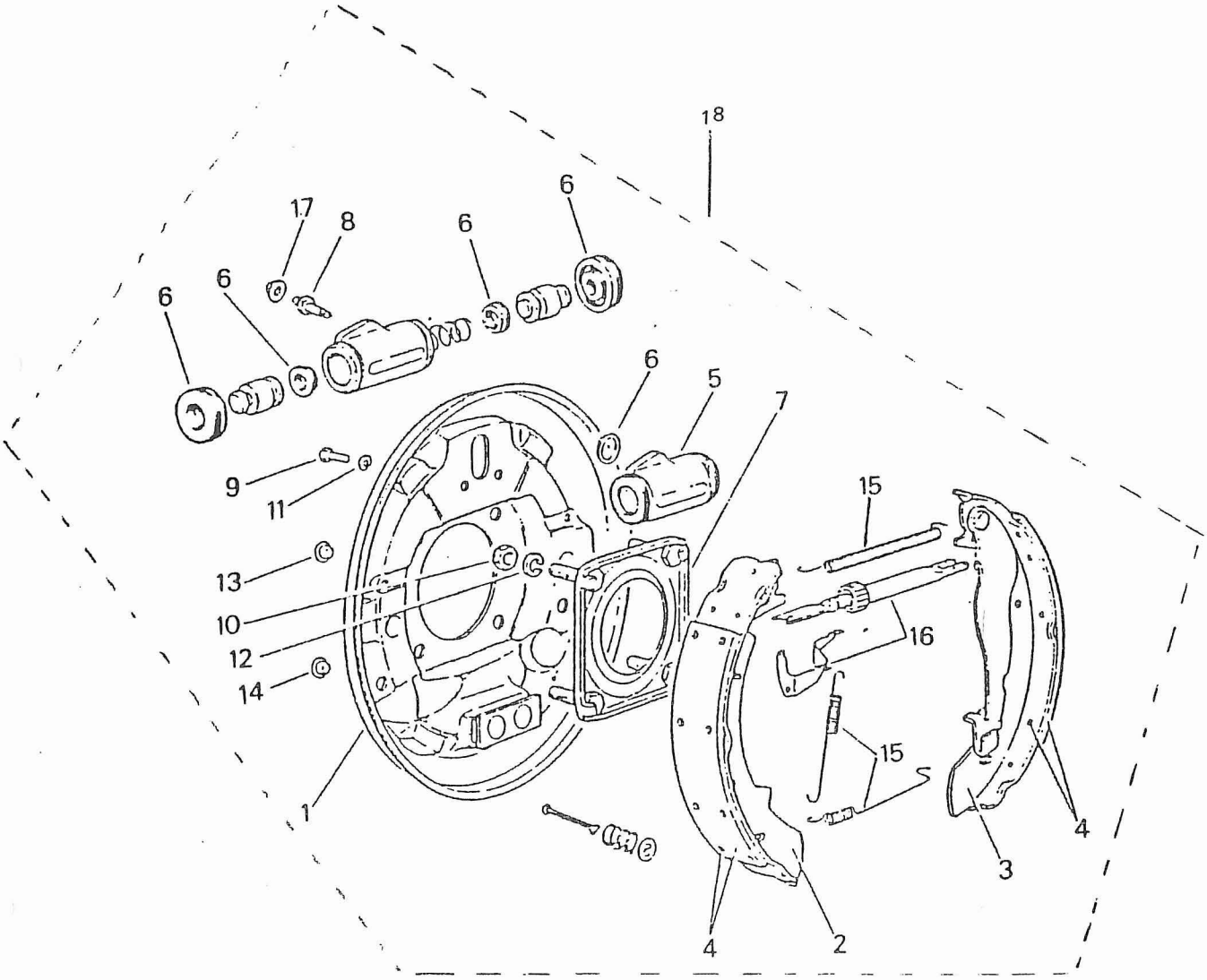

END

PUBLICACION N:A00523 GRUPO=CATAG SJ-413 SAMURAI SUBGRUPO=1I07FRENOS TRASEROS
EDICION N: 3 GROUP=CATAG S-413 SAMURAI SUBGROUP=1I07REAR BRAKE
GROUPE=CATAG SJ-413 SAMURAI SUBGROUPE=1I07FREIN ARRIERE

N.FIG PLATE N.FIG	N.PIEZA PARTNUMBER N.PIECE	CAN QTY OUT	DENOMINACION	DESCRIPTION	DENOMINATION	OBSERVACIONES
1	00000A00531	1	PLATO FRENO LI	PLATE BRAKE LH	PLATEAU FREIN CG	
	00000A00532	1	PLATO FRENO LD	PLATE BRAKE RH	PLATEAU FREIN CD	
2	00000A00534	2	ZAPATA COMPLETA LI	SHOE ASSY LH	MACHOIRE CG	
3	00000A00535	2	ZAPATA COMPLETA LD	SHOE ASSY RH	MACHOIERE CD	
4	00000A00157	4	FORROS ZAPATA	LINING KIT	JEU GUARNITURE	
5	00000A00529	2	CILINDRO DE RUEDA	WHEEL CYLINDER	CYLINDRE ROUE	
6	00000A00160	1	JUEGO REP CILINDRO	CYLIND REPAIR KIT	NECESSARIE REPARAT.	
7	53001B83040	2	CHAPA RETENCION	RETAINER PLATE	PLAQUE RETENTION	
8	00000A00236	1	TORNILLO PURGA	SCREW	VIS	
9	00000A00237	2	TORNILLO	SCREW	VIS	
10	04004-00000	4	TUERCA	NUT	ECROU	
11	00000A00239	2	ARANDELA	WASHER	RONDELLE	
12	08321B31086	4	ARANDELA	WASHER	RONDELLE	
13	00000A00234	1	TAPON	PLUG	BOUCHON	
14	00000A00235	1	TAPON	PLUG	BOUCHON	
15	00000A00158	1	JUEGO MUELLES	SPRINGS SET	JEU RESSORT	
16	00000A00241	1	JUEGO REP FRENO LI	SET REPAIR BRAKE LH	JEU REPAR FREIN CG	
	00000A00242	1	JUEGO REP FRENO LD	SET REPAIR BRAKE RH	JEU REPAR FREIN CD	
17	00000A00291	1	TAPON	PLUG	BOUCHON	
18	53001A70A00	1	CONJ.FRENO LD	BRAKE ASSY RH	ENS FREIN CD	
	53002A70A00	1	CONJ.FRENO LI	BRAKE ASSY LH	ENS.FREIN CG	

FIG. 61

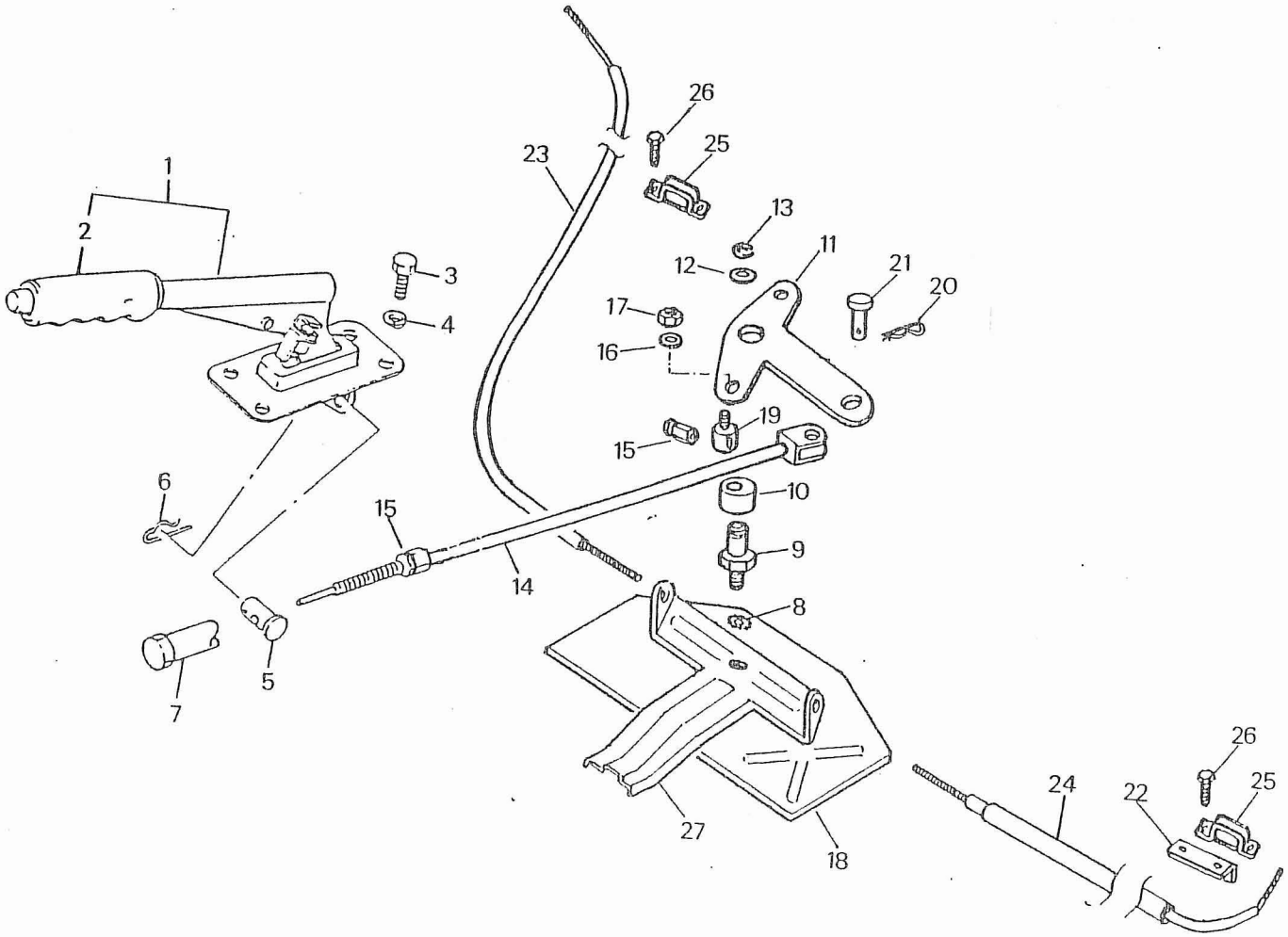
1
2
3
4
5
6
7
8
9
10
11
12
13
14
15
15
16
17
18
19
20
21
22
23
24
25
25
26
26
27

PUBLICACION N:A00523 GRUPO=CATAG SJ-413 SAMURAI SUBGRUPO=1I08FRENO DE MANO
EDICION N: 3 GROUP=CATAG S-413 SAMURAI SUBGROUP=1I08LEVER ASSY BRAKE
GROUPE=CATAG SJ-413 SAMURAI SUBGROUPE=1I08FREIN A MAIN

N.FIG PLATE N.FIG	N.PIEZA PARTNUMBER N.PIECE	CAN QTY OUT	DENOMINACION	DESCRIPTION	DENOMINATION	OBSERVACIONES
1	54100B83310	1	CONJ. PALANCA	LEVER ASSY	ENS. LEVIER	
2	54112-82010	1	EMPU\ADURA	BOOT	POIGNEE	
3	01104-06203	4	TORNILLO	SCREW	VIS	
4	08321A31066	4	ARANDELA MUELLE	SPRING WASHER	RONDELLE RESSORT	
5	54161-83300	1	PASADOR	PIN	CLAVETTE	
6	09385-12001	1	CLIP	CLIP	CLIP	
7	54683-83300	1	TUERCA REGLAJE	NUT	ECROU	
8	09163T10001	1	A.DENTADA	WASHER	RONDELLE	
9	45012-00000	1	EJE ARTICULACION	SHAFT	AXE	
10	45011-00000	1	CASQUILLO	BUSH	BAGUE	
11	45008-00000	1	PALANCA INTERM	LEVER INTERD	LEVIER INTERMD.	
12	45020-00000	1	ARANDELA	WASHER	RONDELLE	
13	45019-00000	1	CIRCLIP.	CIRCLIP	CIRCLIP	
14	45015-00000	1	VARILLA FRENO	ROD	TIGE	
15	45014-00000	3	TUERCA TENSORA	NUT TENSION	ECROU TENSION	
16	08322-11086	2	ARANDELA PLANA	PLAIN WASHER	RONDELLE PLANE	
17	09159A08022	2	TUERCA	NUT	ECROU	
18	45018-00000	1	PROTECTOR PALANCA	GUARD LEVER	PROTECT LEVIER	
19	45013-00000	1	GUIA CABLE	GUIDE CABLE	GUIDE CABLE	
20	04111-25186	1	PASADOR ALETAS	COTTER PIN	CLAVETTE	
21	09200A08039	1	PASADOR CILIND	PIN CILIND	CLAVETTE CIL	
22	45023-00000	2	SOPORTE CABLE	BRACKET CABLE	SUPPORT CABLE	
23	54640A70A00	1	CABLE LD	CABLE RH	CABLE CD	
	54640A70A10	1	CABLE LD	CABLE RH	CABLE CD	LONG BODY
24	54660A83310	1	CABLE LI	CABLE LH	CABLE CG	
	54681A83600	1	CABLE LI	CABLE LH	CABLE CG	LONG BODY
25	45022-00000	2	BRIDA SOPORTE	FLANGE	BRIDE	
26	09132-06006	4	TORNILLO	SCREW	VIS	
27	40046-00000	1	SOPORTE PALANCA	BRACKET LEVER	SUPORT LEVIER	

FIG. 63

H - 06

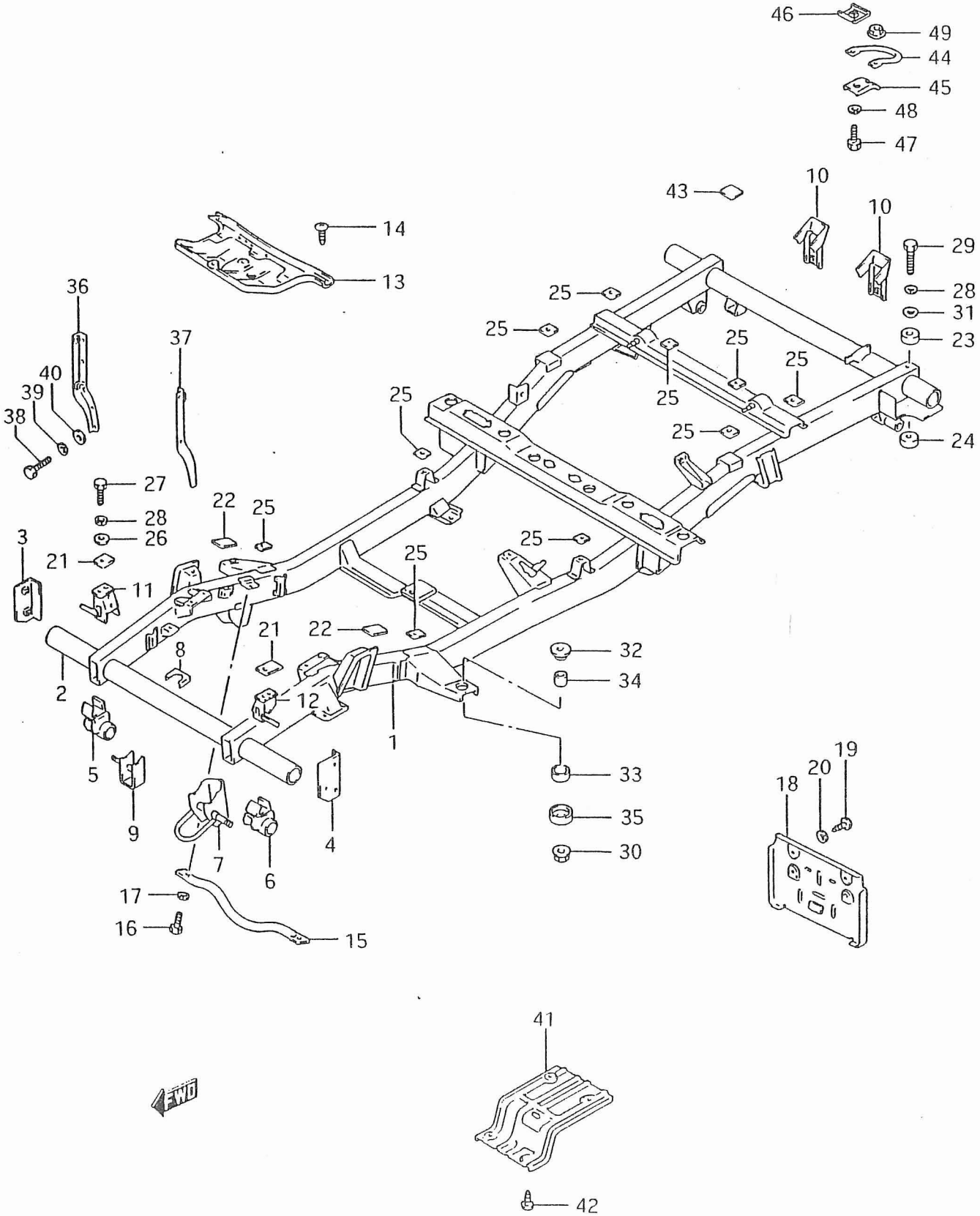

46
49
44
45
48
47
43
10
10
29
28
31
23
24
14
13
36
37
40
39
38
25
25
25
25
25
25
25
25
27
28
26
22
25
3
21
11
25
25
21
22
8
2
12
1
32
34
5
9
7
6
4
33
35
30
19
20
18
17
16
15
41
42
FWD

PUBLICACION N:A00523 GRUPO=CATAG SJ-413 SAMURAI SUBGRUPO=H06CONJ.CHASIS
EDICION N: 3 GROUP=CATAG S-413 SAMURAI SUBGROUP=H06FRAME ASSY
GROUPE=CATAG SJ-413 SAMURAI SUBGROUPE=H06ENS.CHASSIS

N.FIG PLATE N.FIG	N.PIEZA PARTNUMBER N.PIECE	CAN QTY OUT	DENOMINACION	DESCRIPTION	DENOMINATION	OBSERVACIONES
1	57000A70A10 CB/S	1	CONJ.CHASSIS	FRAME ASSY F.U.	ENS CHASSIS	U.K.
	57000A70A60 USE	1	CONJ CHASIS	FRAME ASSY	ENS CHASSIS	
	57000A74A50	1	CONJ CHASIS	FRAME ASSY	ENS CHASSIS	LONG BODY
2	57211-80000	1	TRAVESA\O 1	MEMBER 1	SUPPORT 1	
3	57461-80001	1	SOP PARAG DEL LD	BRACKET BUMPER RH	SUP PARECHOC CD	
4	57471-80001	1	SOPORTE PARAG LI	BRACKET BUMPER LH	SUP PARECHOC CG	
5	57710-83301	1	SOP BALLESTA LD	BRACKET SPRING RH	SUPPORT RESSORT CD	
6	57720-83301	1	SOP BALLESTA LI	BRACKET SPRING LH	SUPPORT RESSORT CG	
7	57270-83011	1	GANCHO DEL.	HOOK FRONT	CROCHET AVAN	U.K.
	57270-83021	1	GANCHO DELANTERO	HOOK FRONT	CROCHET AVANT	
8	57551-83000	1	SOP PANEL MOTOR	BRACKET PANEL MOTOR	SUPPORT PAN MOTEUR	
9	57680-83001	1	SOP BARRA ESTABILIZ	BRACKET STABILIZER	SUPORT BARRE STABILZ	
10	57280-80020	2	SOPORTE MATRICULA	BRACKET LICENCE	SUPPORT IMMATRICUL	
11	57310-83000	1	SOPORTE LD	BRACKET RH	SUPPORT CD	
12	57320-83000	1	SOPORTE LI	BRACKET LH	SUPPORT CG	
13	71411-83000	1	PANEL SALP MOTOR	PANEL ENGINE	PANNEAU MOTEUR	
14	03241-06103	4	TORNILLO	SCREW	VIS	
15	71441-83002	1	PLETINA	BRAKET	SUPPORT	
16	01107-10203	2	TORNILLO	BOLT	VIS	
17	08321B31103	22	ARANDELA	WASHER	RONDELLE	
18	71481-80030	1	SOP PLACA MATRICULA	BRACKET LICENCE	SUPPORT IMMATRIC	
19	02112-06123	4	TORNILLO	BOLT	VIS	
20	08321A31063	4	ARANDELA	WASHER	RONDELLE	
21	71491-80000	2	TAPA	PAD	CACHET	
22	71493-83000	2	TAPA	PAD	CACHET	
23	71494-80001	2	TAPA	PAD	CACHET	
24	71494-80201	2	TAPA	PAD	CACHET	
25	50140-00000	6	PLACA	PAD	SUPPLEMENT	
	57321-52001	1	SUPLEMENTO	PAD	SUPPLEMENT	
	71492-80010	6	SUPLEMENTO	PAD	SUPPLEMENT	
26	09160-10094	2	ARANDELA	WASHER	RONDELLE	
27	01707-10403	2	TORNILLO	BOLT	VIS	
29	09100-10168	2	TORNILLO	BOLT	VIS	
30	09159A10056	2	TUERCA	NUT	ECROU	
31	09160-10094	2	ARANDELA	WASHER	RONDELLE	
32	71610-83000	6	CASQUILLO	BUSH	BAGUE	
33	71620-83000	6	CASQUILLO	BUSH	BAGUE	
34	71631-83000	6	CASQUILLO	BUSH	BAGUE	
35	71632-83000	6	TAPA	COVER	COUVERCLE	
36	71420-83000	1	TIRANTE RADIADOR LD	TIE ROD RADIATOR RH	TIGE RADIATEUR CD	
37	71430-83000	1	TIRANTE RADIADOR LI	TIE ROD RADIATOR LH	TIGE RADIATEUR CG	
38	01104-08166	4	TORNILLO	BOLT	VIS	

FIG. 63.1

H - 07

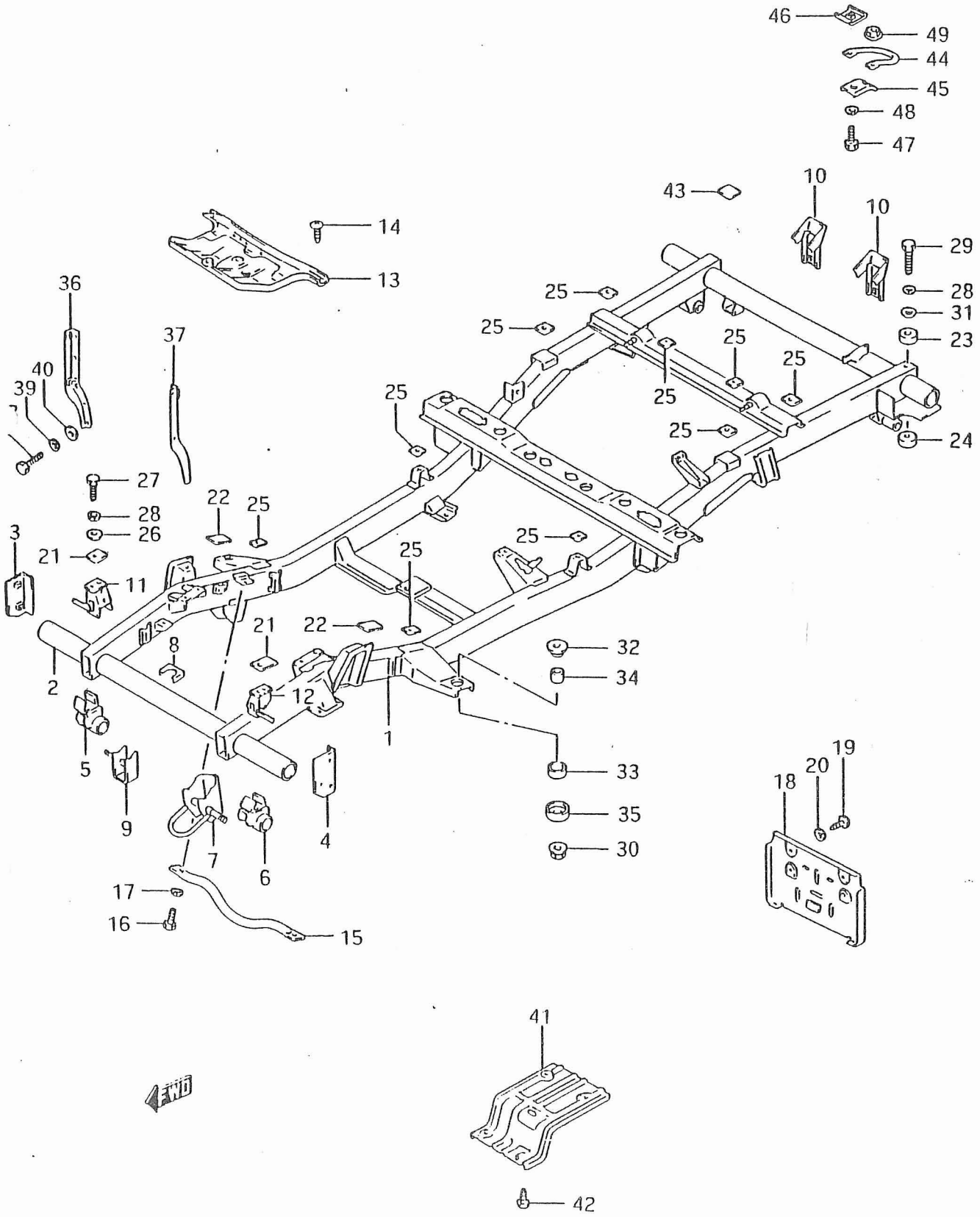

46
49
44
45
48
47
43
10
10
29
28
31
23
24
14
13
36
37
40
39
25
25
25
25
25
25
25
25
27
28
26
22
25
3
21
11
25
25
21
22
8
2
12
1
32
34
5
9
7
6
4
33
35
30
18
20
19
17
16
15
41
42
FWD

PUBLICACION N:A00523 GRUPO=CATAG SJ-413 SAMURAI SUBGRUPO=1J02PARRILLA DELANT
EDICION N: 3 GROUP=CATAG S-413 SAMURAI SUBGROUP=1J02FRONT BODY
GROUPE=CATAG SJ-413 SAMURAI SUBGROUPE=1J02GRILLE AV/AILETE

N.FIG PLATE N.FIG	N.PIEZA PARTNUMBER N.PIECE	CAN QTY OUT	DENOMINACION	DESCRIPTION	DENOMINATION	OBSERVACIONES
1	58100-70A02	1	PANEL FRONTAL	PANEL FRONT	PANNEAU AVANT	
2	58200-83002	1	SOPORTE INF DELANT	MEMBER FRONT LOWER	SUPPORT INF AVANT	
3	58600A70A30	1	CONJUNTO ALETA LD	FENDER ASSY RH	ENS AILE CD	
4	58622-83002	1	SOPORTE EXTENC LD	HOLDER EXTENS RH	SUPPORT EXTENT CD	
5	58763-83000	1	PLACA DELANTERA	BAFFLE FRONT	PLAQUE AILETTE AV	
6	58726-83001	1	SOPORTE INF FILTRO	BRACKET AIR LOWER	SUPPORT INF FILTRE	
7	58800A70A30	1	CONJUNTO ALETA LI	FENDER ASSY LH	ENS AILETTE CG	
8	58822-83002	1	SOPORTE EXTENSION LI	HOLDER EXTENS LH	SUPPORT EXTENS CG	
9	58723-83001	1	ALOJAM.FARO LD	MEMBER HEADLAMP RH	LOGEMENT CD	
10	58923-83001	1	ALOJAMIENTO FARO LI	MEMBER HEADLAMP LI	LOGEMENT CG	
11	09125-06036	2	TORNILLO	SCREW	VIS	
12	58771-80001	1	RELLENO ALETA LD	LINER FENDER RH	BOURRE AILE LD	
13	58971-80001	1	RELLENO ALETA LI	LINER FENDER LH	BOURRE AILE CG	
14	03241-06128	2	TORNILLO	SCREW	VIS	
15	09148A06003	2	TUERCA	NUT	ECROU	
16	01104-06128	12	TORNILLO	BOLT	VIS	
17	08321A31068	12	ARANDELA	WASHER	RONDELLE	
18	09160-06016	12	ARANDELA	WASHER	RONDELLE	
19	09125-06036	18	TORNILLO	SCREW	VIS	
20	09160-06003	2	ARANDELA	WASHER	RONDELLE	
21	71710-83301-162	1	PARAGOLPES DELANTERO	BAR FRONT BUMPER	PARE CHOC AVANT	
22	71741-83301	1	ESQUINA PARAGOLP LD	CORNER BUMPER RH	PONT PARECHOC CD	
23	71742-83301	1	ESQUINA PARAGOLP LI	CORNER BUMPER LH	PONT PARECHOC CG	
24	09409-07311	2	CLIP	CLIP	CLIP	
25	01514-08123	4	TORNILLO	SCREW	VIS	
26	02142-06123	4	TORNILLO	SCREW	VIS	
27	72111A70A00A	1	REJILLA DEL AZUL	GRILL FRONT BLUE	GRILLE AV BLEU	
	72111A70A00B	1	REJILLA DEL BLANCA	GRILL FRONT WHITE	GRILLE AV BLANC	
	72111A70A00M	1	REJILLA DEL METALIC	GRILL FRONT METALLIC	GRILLE AV METALLIC	
	72111A70A00N	1	REJILLA DEL NEGRA	GRILL FRONT BLACK	GRILLE AV NOIR	
	72111A70A00P	1	REJILLA DEL PLATA	GRILL FRONT SILVER	GRILLE AV ARGENT	
	72111A70A00R	1	REJILLA DEL ROJA	GRILL FRONT RED	GRILLE AV ROUGE	
28	72115-70A00	1	REJILLA FRONTAL	NET FRONT GRILLE	GRILLE AVANT	
29	03241-05165	5	TORNILLO	SCREW	VIS	
30	09148-05022	5	TUERCA	NUT	ECROU	
31	50376-00000	1	ANAGRAMA SANTAN	EMBLEM SANTANA	ANAGRAME SANTANA	FRANCIA
	77811C83000	1	ANAGRAMA SUZUKI	EMBLEM SUZUKI	ANAGRAMME SUZUKI	
	77841A80001	1	ANAGRAMA SANTANA	EMBLEM SANTANA	ANNAGRAM SANTANA	
32	09148A03003	2	CLIP FIJ ANAGRAMA	CLIP FIX EMBLEM	CLIP FIJ ANANGRAM	
33	72411-70A00	2	SOPORTE PANEL DEL	MEMBER FRONT PANEL	SUPPORT PANNEAU AVAN	
34	02112-06125	8	TORNILLO	SCREW	VIS	
35	08322-21065	8	ARANDELA	WASHER	RONDELLE	

FIG. 64.1

J - 03

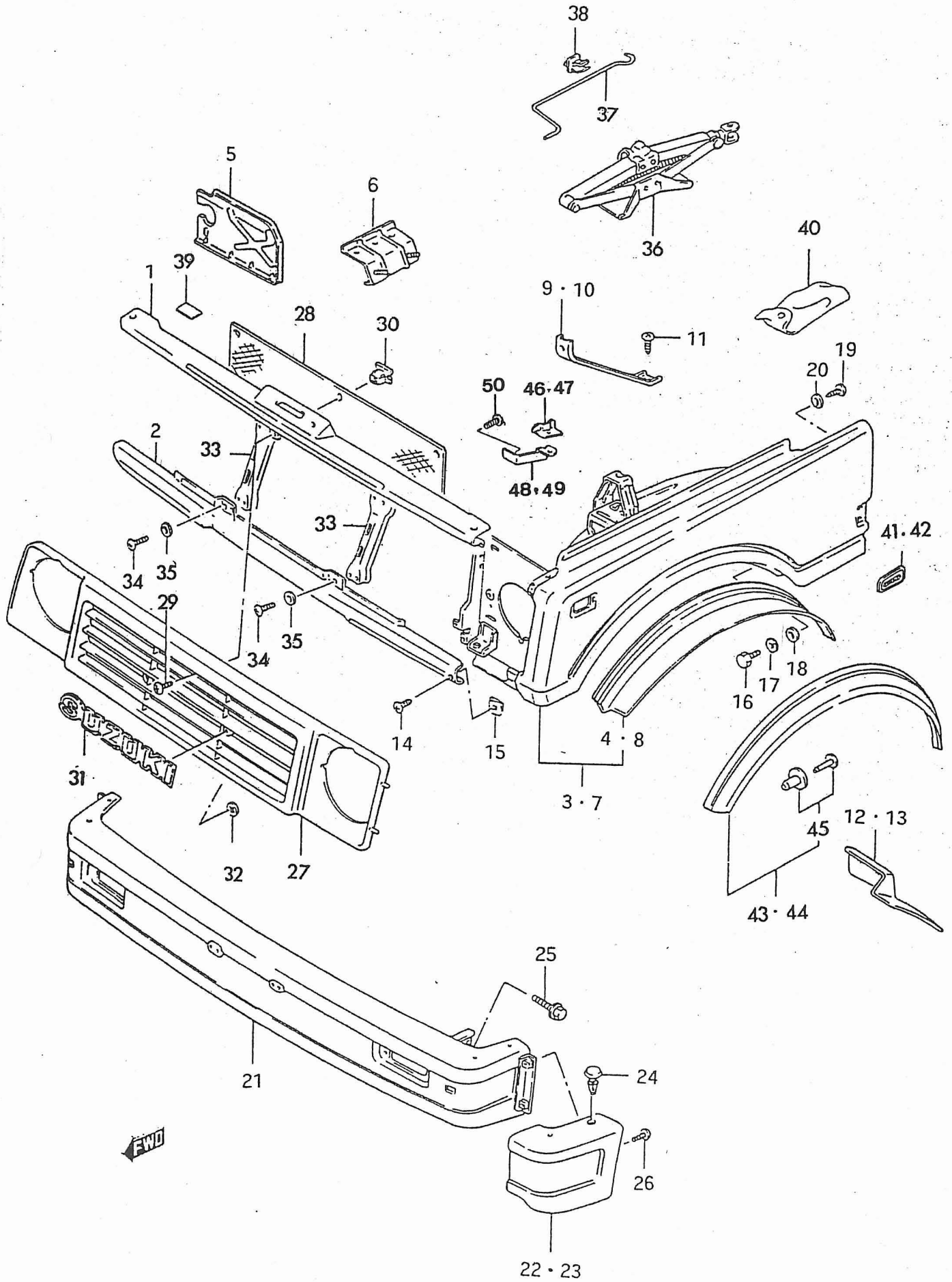
38
37
36
5
6
40
39
1
9 · 10
11
28
30
19
20
50
46·47
2
33
48·49
33
41·42
34
35
29
35
34
18
17
16
14
15
4 · 8
31
3 · 7
45
12 · 13
32
27
43 · 44
25
21
24
FWD
26
22 · 23

PUBLICACION N:A00523 GRUPO=CATAG SJ-413 SAMURAI SUBGRUPO=1J03ANAGRAMAS
EDICION N: 3 GROUP=CATAG S-413 SAMURAI SUBGROUP=1J03ANAGRAM
GROUPE=CATAG SJ-413 SAMURAI SUBGROUPE=1J03ANAGRAMME

N.FIG PLATE N.FIG	N.PIEZA PARTNUMBER N.PIECE	CAN QTY OUT	DENOMINACION	DESCRIPTION	DENOMINATION	OBSERVACIONES
36	09824A00022	1	C. GATO	JACK ASSY	ENS CRIC	
37	09824A00017	1	PALANCA GATO	HANDLE JACK	LEVIER CRIC	
38	09403-09309	2	ABRAZADERA	CLAMP	COLLIER CRIC	
39	72441-80001	1	PELICULA CAPO	FILM HOOD CUSHION	FILME CAPO	
40	09800A00180	1	CON. HERRAMIENTAS	TOOL ASSY	TROUSSE A OUTILS	
	09811A00182	1	BOLSA	TOOL BEAGE	TROUSSE	
	09812A00007	1	MANGO DESTORNILLADOR	COBINATION PLIERS	PINCE MULTIPLE	
	09813A00006	1	LLAVE 10X12	WRECH 10X12	CLE 10X12	
	09813A00009	1	LLAVE 14X17	WRENCH 14X17	CLE 14X17	
	09814A00001	1	CUERPO DESTORNILL	SCREW DRIVE	TOURNEVIS	
	09814A00007	1	ALICATES	GRIP	PINCES	
	09816A00074	1	LLAVE RUEDAS	WHEEL SPANNER	CLE ROUE	
	09816A00083	1	LLAVE BUJIAS	SPARK PLUG SPANNER	CLE BOUGIE	
41	77830-70A00A	1	SAMURAI LD AZUL	SAMURAI RH BLUE	SAMURAI CD BLEU	
	77830-70A00B	1	SAMURAI LD BLANCO	SAMURAI RH WHITE	SAMURAI CD BLANC	
	77830-70A00M	1	SAMURAI LD METALIC	SAMURAI RH METALLIC	SAMURAI CD METALLIC	
	77830-70A00N	1	SAMURAI LD NEGRO	SAMURAI RH BLACK	SAMURAI CD NOIR	
	77830-70A00P	1	SAMURAI LD PLATA	SAMURAI RH SILVER	SAMURAI CD ARGENT	
	77830-70A00R	1	SAMURAI LD ROJO	SAMURAI RH RED	SAMUARI CD ROUGE	
42	77840-70A00A	1	SAMURAI LI AZUL	SAMURAI LH BLUE	SAMURAI CG BLEU	
	77840-70A00B	1	SAMURAI LI BLANCO	SAMURAI LH WHITE	SAMURAI CG BLANC	
	77840-70A00M	1	SAMURAI LI METALIC	SAMURAI LH METALLIC	SAMURAI CG METALLIC	
	77840-70A00N	1	SAMURAI LI NEGRO	SAMURAI LH BLACK	SAMURAI CG NOIR	
	77840-70A00P	1	SAMURAI LI PLATA	SAMURAI LH SILVER	SAMURAI CG ARNGENT	
	77840-70A00R	1	SAMURAI LI ROJO	SAMURAI LH RED	SAMURAI CG ROUGE	
43	77131-83022A	1	EXTENSION LD AZUL	EXTENTION RH BLUE	EXTENTION CD BLEU	
	77131-83022B	1	EXTENSION LD BLANCO	EXTENTION RH WHITE	EXTENTION CD BLANC	
	77131-83022M	1	EXTENSION LD METALIC	EXTENTION RH METALLI	EXTENTION CD METALLI	
	77131-83022N	1	EXTENSION LD NEGRO	EXTENTION RH BLACK	EXTENTION CD NOIR	
	77131-83022P	1	EXTENSION LD PLATA	EXTENTION RH SILVER	EXTENTION CD ARGENT	
	77131-83022R	1	EXTENSION LD ROJA	EXTENTION RH RED	EXTENTION CD ROUGE	
44	77141-83022A	1	EXTENSION LI AZUL	EXTENTION LH BLUE	EXTENTION CG BLEU	
	77141-83022B	1	EXTENSION LI BLANCO	EXTENTION LH WHITE	EXTENTION CG BLANC	
	77141-83022M	1	EXTENSION LI METALIC	EXTENTION LH METALLI	EXTENTION CG METALLI	
	77141-83022N	1	EXTENSION LI NEGRO	EXTENTION LH BLACK	EXTENTION CG NOIR	
	77141-83022P	1	EXTENSION LI PLATA	EXTENTION LH SILVER	EXTENTION CG ARGENT	
	77141-83022R	1	EXTENSION LI ROJO	EXTENTION LH RED	EXTENTION CG ROUGE	
45	09409-07312	12	CLIP	CLIP	CLIP	
46	65951-80000	1	REFUERZO LD	REINFORCEM.RH	RENFOR CD	LONG BODY
47	65952-80000	1	REFUERZO LI	REINFORCEM. LH	RENFOR CG	LONG BODY
48	65953-83000	1	SOP. ALETA LD	BRACKET FENDER RH	SOP.AILE CD	LONG BODY
49	65954-83000	1	SOP. ALETA LI	BRACKET FENDER LH	SOP. AILE CG	LONG BODY
50	09125-06036	2	TORNILLO	SCREW	VIS	LONG BODY

FIG. 65

J - 04

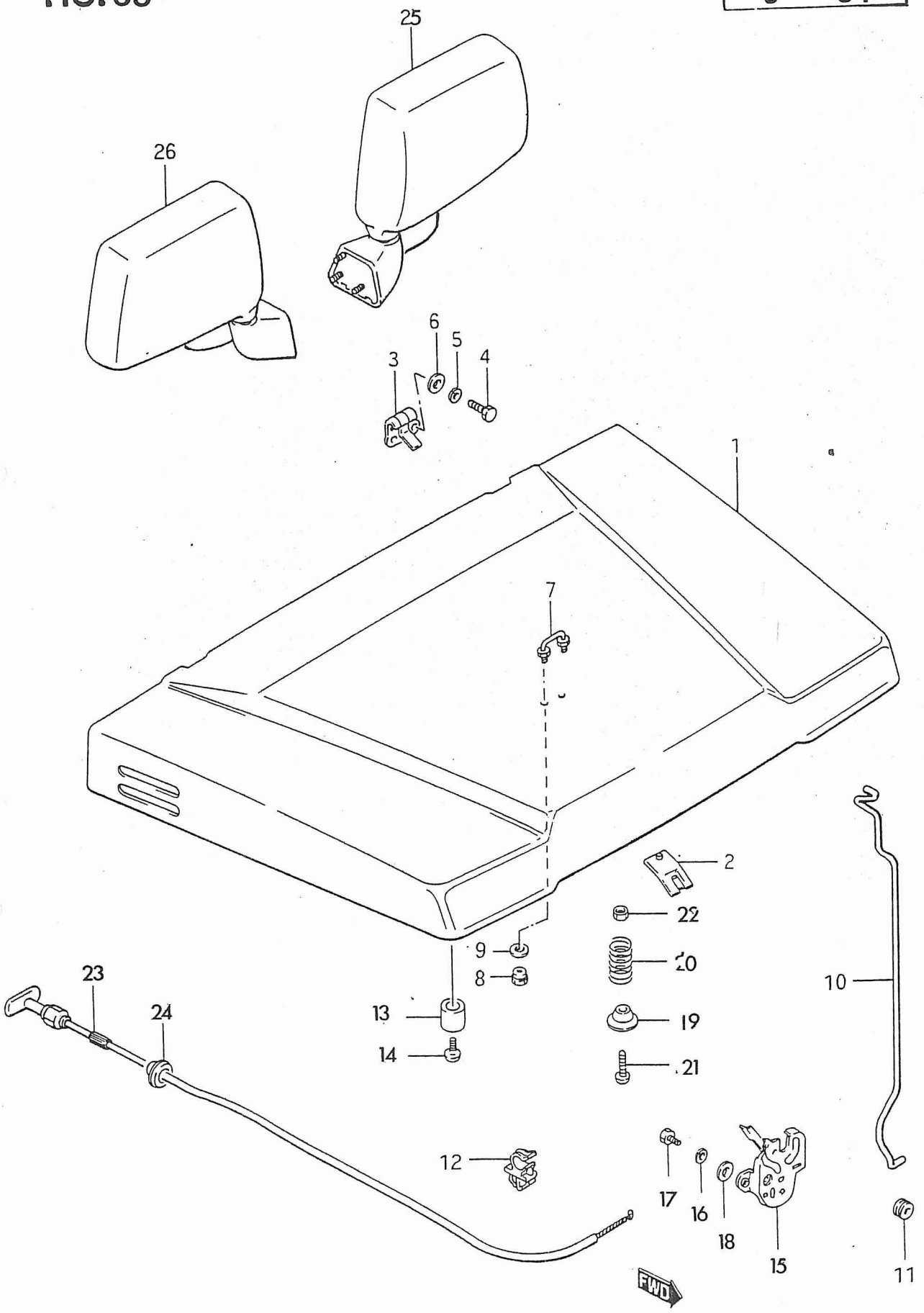

PUBLICACION N:A00523 GRUPO=CATAG SJ-413 SAMURAI SUBGRUPO=1J04CAPO DELANTERO
EDICION N: 3 GROUP=CATAG S-413 SAMURAI SUBGROUP=1J04HOOD FRONT
GROUPE=CATAG SJ-413 SAMURAI SUBGROUPE=1J04CAPO MOTEUR

N.FIG PLATE N.FIG	N.PIEZA PARTNUMBER N.PIECE	CAN QTY OUT	DENOMINACION	DESCRIPTION	DENOMINATION	OBSERVACIONES
1	58300-83001	1	CAPO DELANTERO MOD-J	PANEL ASSY HOOD MOD-	CAPOT MOTEUR	
	58300-83100	1	CAPO DELANTERO MOD-V	PANEL ASSY HOOD MOD-	CAPOT MOTEUR MOD-V	
2	58370-83000	1	GANCHO CIERRE CAPO	HOOK HOOD LOCK	CROCHET FERME CAPOT	
3	58410-80010	2	BISAGRA CAPO	HINGE HOOD	CHARNIERE CAPOT AUAN	
4	01104-06168	4	TORNILLO	BOLT	VIS	
5	08321A31068	4	ARANDELA GROWER	LOCK WASHER	RONDELLE	
6	09160-06019	4	ARANDELA GROWER	MASHER	RONDELLE	
7	58381A80000	1	GANCHO CAPO MOD-J	HOOK WINDOW LOCK M J	CROCHET CAPO MOD-J	
8	08310-11066	2	TUERCA	NUT	ECROU	
9	58382A80000	2	ARANDELA	WASHER	RONDELLE	
10	72442-83002	1	VARILLA CAPO	STAY FRONT MOOD	TENDEUR CAPOT	
11	09308-08001	1	A GOMA	GROMMET	CAOUTCHOUC	
12	09403-08313	1	ABRAZADERA	CLAMP	COLLIER	
13	09320-06011	2	TOPE DE GOMA	CUSHION FRONT	BAGUE CAOUTCHOUC	
14	02112-06165	2	TORNILLO	SCREW	VIS	
15	82110-80013	1	CIERRE CAPO	LOCK HOOD	ENS FERMETURE CAROT	
16	08321A31068	2	ARANDELA	WASHER	RONDELLE	
17	09128-06031	2	TORNILLO	SCREW	VIS	
18	09160-06006	2	ARANDELA	WASHER	RONDELLE	
19	82171-80100	1	SOP MUELLE APERTURA	SPRING SUPPORT	SUPPORT RESSORT	
20	09440-27007	1	MUELLE APERTURA	SPRING OPEN	RESSORT	
21	02112-06405	1	TORNILLO	SCREW	VIS	
22	08310-11066	1	TUERCA	NUT	ECROU	
23	82160A80010	1	CABLE APERTURA CAPOT	CABLE HOOK LOCK	CABLE	
24	82191A80002	1	A GOMA	GROMMET	CAOUTCHOC	
25	84702A83010	1	ESPEJO RETROV LI	MIRROR ASSY LH	RETROVISEUR CG	
26	84701A83010	1	ESPEJO RETROV.LD	MIRROR ASSY RH	RETROVISEUR CD	
27	02132-05105	3	TORNILLO	SCREW	VIS	

FIG.66

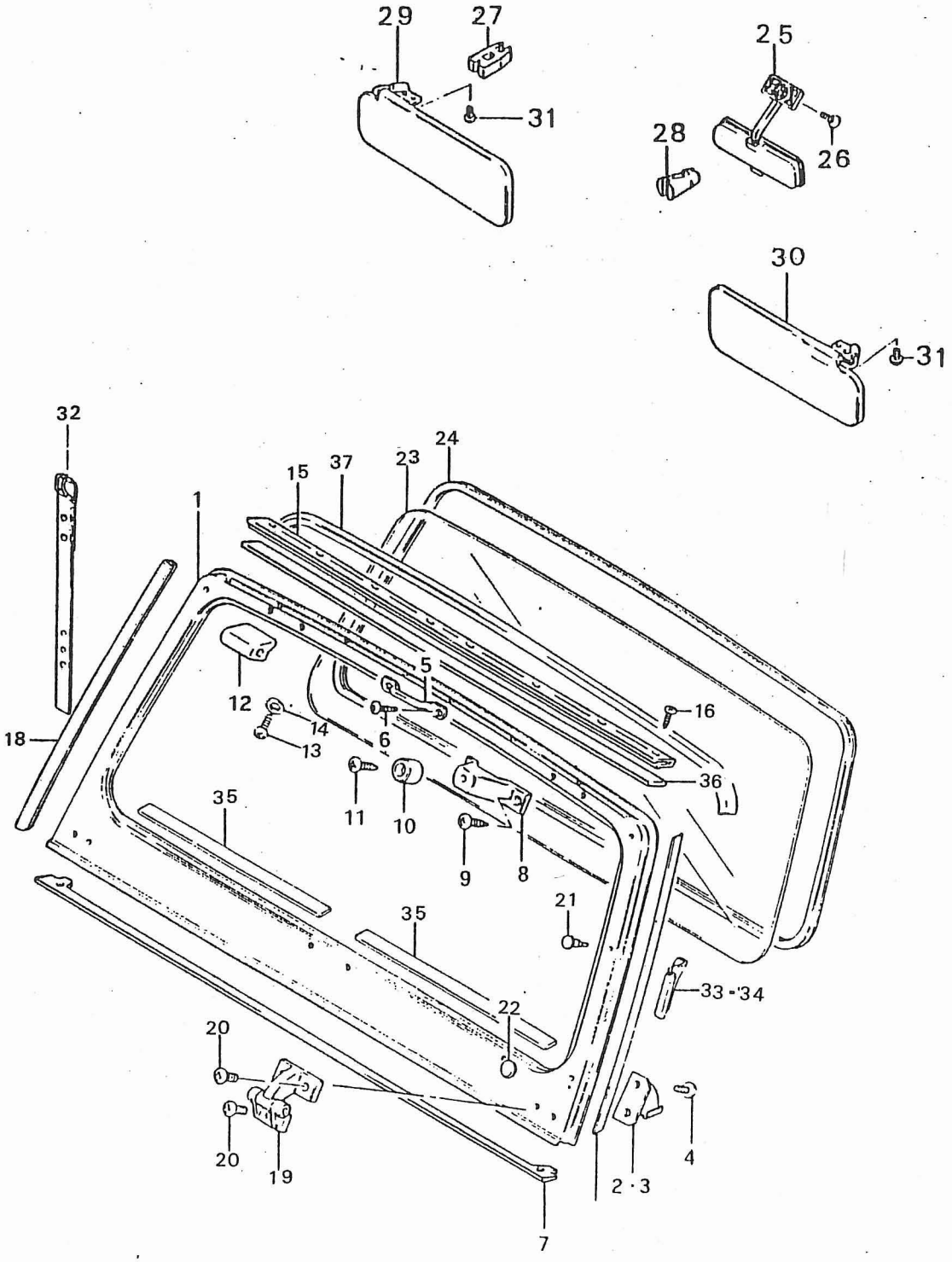
29
27
31
25
28
26
30
31
32
24
23
37
15
1
5
12
14
6
13
16
18
36
35
11
10
9
8
21
35
33 - 34
22
20
20
19
4
2 · 3
7

PUBLICACION N:A00523 GRUPO=CATAG SJ-413 SAMURAI SUBGRUPO=1J05PARABRISAS MOD J
EDICION N: 3 GROUP=CATAG S-413 SAMURAI SUBGROUP=1J05PANEL ASSY MOD J
GROUPE=CATAG SJ-413 SAMURAI SUBGROUPE=1J05OPARABRISES MOD

N.FIG PLATE N.FIG	N.PIEZA PARTNUMBER N.PIECE	CAN QTY OUT	DENOMINACION	DESCRIPTION	DENOMINATION	OBSERVACIONES
1	59101-80030	1	CONJ PARABRISAS J	PANEL ASSY FRONT J	PARABRISES MOD J	
2	72411-80000	1	SOPORTE CIERRE LD	STAY LOCK RH	TIGE FERME CD	
3	72412-80000	1	SOPORTE CIERRE LI	STAY LOCK LH	TIGE FERME CG	
4	02142-06165	4	TORNILLO	SCREW	VIS	
5	72415-80000	1	GANCHO TOPE VENTANA	HOOK WINDOW STOPPER	CROCHET	
6	02112-05103	2	TORNILLO	SCREW	VIS	
7	72413-80003	1	TIRA SELLANTE INT	WEATHERSTRIP	ETANCHEITE INT	
8	72414-80000	2	SOP APOYO VENTANA	BRACKET WINDOW	SUPPORT FENETRE	
9	03211-05163	4	TORNILLO	SCREW	VIS	
10	09320-06006	2	APOYO DELANTERO MOD	CUSHION WINDOW MOD J	CAOUTCHOUC MOD J	
11	03211-05163	2	TORNILLO	SCREW	VIS	
12	78142A80100	1	APOYO GOMA MOD V	CUSHION MOD V	CAOUTCHOUC MOD V	
13	02142-05168	1	TORNILLO	SCREW	VIS	
14	08322-21058	1	A PLANA	WASHER	RONDELLE	
15	72418-80003	1	GUARNICION SUP VENTA	GARNISH	GUARNITURE	
16	03111-05203	8	TORNILLO	SCREW	VIS	
17	84644A80001	2	SELLANTE LATERAL	SEALING SIDE	BANDE LATERALE	
18	84645C80101	2	TAPICERIA APERTURA	OPENING SIDE	BANDE LATERALE	
19	72420-80010	2	C BISAGRA	HINGE WINSCREEN	CHARNIERE PARE BRISE	
20	09125-06022	6	TORNILLO	SCREW	VIS	
21	09250-02001	2	TAPON AGUJERO ANTENA	CAP ANTENA HOLE	BOUCHON ORIFICE	
22	09250-14003	1	TAPON AGUJERO ANTENA	CAP ANTENA HOLE	BOUCHON ORIFICE	
23	84511-80132	1	CRISTAL PARABRISAS	CLASS WINDSHIELD	GLACE PAREBRISSE	
24	84611A80100	1	GOMA PARABRISAS	WEATHERSTRIP	PROFIL PAREBRISSE	
25	84703-80000	1	CONJ ESPEJO RETROVIS	MIRROR ASSY	ENS RETROVISEUR	
26	02142-05128	2	TORNILLO	SCREW	VIS	
27	86169-79000	1	SOPORTE GOMA MOD-J	SUPPORT MOD-J	SUPPORT CADUTCHOOC M	
28	84781-80000	1	SOPORTE GOMA MOD-V	SUPPORT MOD-V	SUPPORT CAOUTCHOOC M	
29	84801-83030	1	PARASOL LD	SUN VISOR RH	PARE SOLEIL CD	
30	84802-80011	1	PARASOL LI	SUN VISOR LH	PARE-SOLEIL CG	
31	02132-05105	4	TORNILLO	SCREW	VIS	
32	72450A80000	2	CORREA VENTANA	WINDOW BELT	COURROIE FENETRE	
33	84648-80011	1	EMBELLECEDOR LD	GARNISH FRONT RH	ENJOLIVEUR CD	
34	84649-80011	1	EMBELLECEDOR LI	GARNISH FRONT LH	ENJOLIVEUR CG	
35	72416-83000	2	BANDA INF VENTANA	BAND WINDOW	BANDE INF FENETRE	
36	72419-83010	1	PERFIL SUP TOLDO	PAD WINDOW GARNISH	PROFILE SUP BACHE	
37	72462-83000	1	PERFIL SUP.PARABRISA	PROFILE UPPER	PROFIL SUP.	

FIG. 67

J - 06

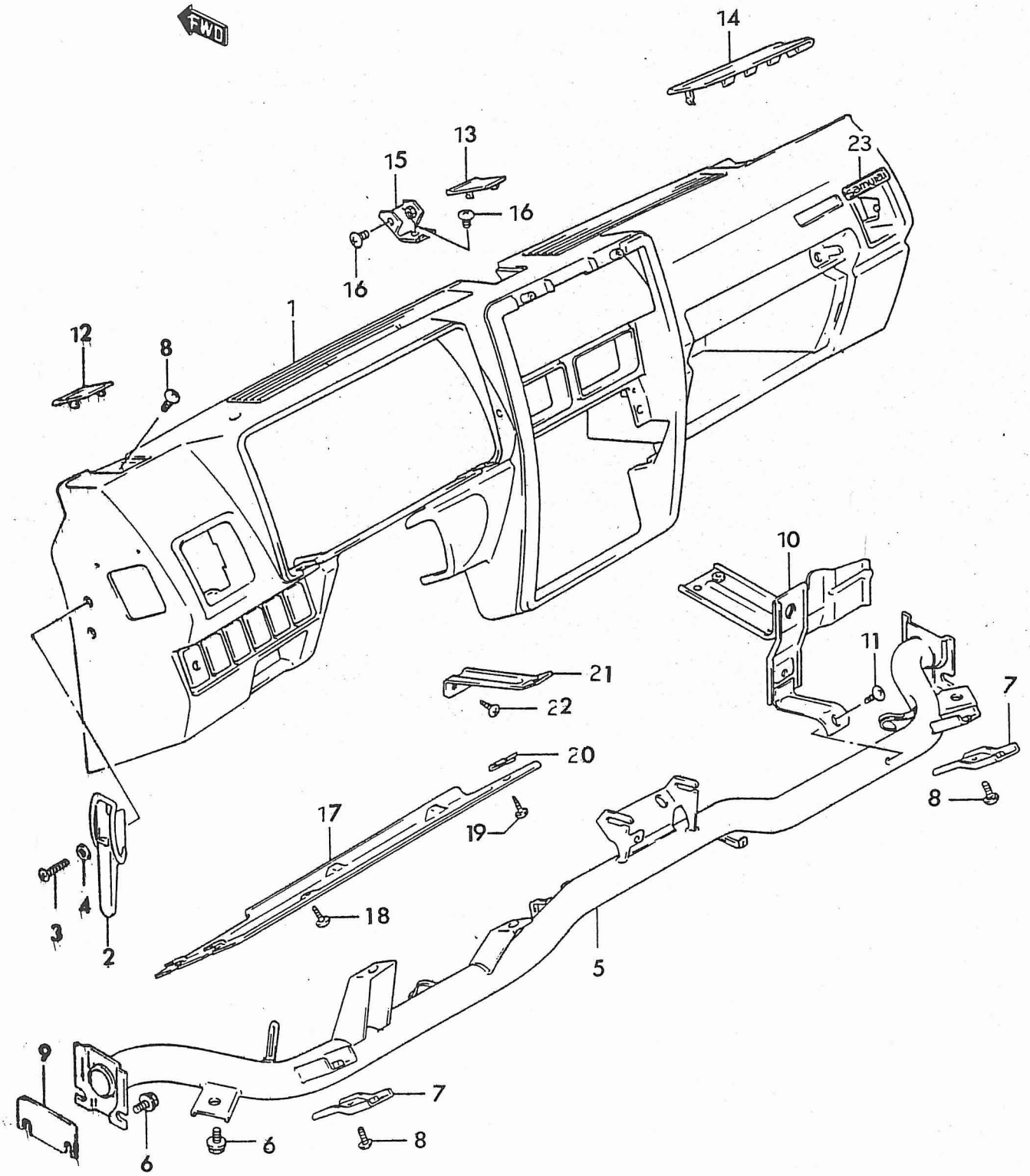

PUBLICACION N:A00523 GRUPO=CATAG SJ-413 SAMURAI SUBGRUPO=1J06GUARNECIDO SALPI
EDICION N: 3 GROUP=CATAG S-413 SAMURAI SUBGROUP=1J06PANEL INSTRUMENT
GROUPE=CATAG SJ-413 SAMURAI SUBGROUPE=1J06GARNIT.PANNEAU

N.FIG PLATE N.FIG	N.PIEZA PARTNUMBER N.PIECE	CAN QTY OUT	DENOMINACION	DESCRIPTION	DENOMINATION	OBSERVACIONES
1	73111A70A01-ALB	1	PANEL INSTRUMENTOS	PANEL INSTRUMENTS	PANNEAU INSTRUMENTS	~~U.K.~~.
	73111A70A11	1	PANEL GRIS	PANEL INSTRUMENTS	PANNEAU INSTRUMENTS	C/D.
	73111B70A11	1	PANEL MARRON	PANEL BROWN	PANNEAU MARRON	
2	72430-80002	1	MANECILLA VENTANA	HANDLE WINDOW LOCK	MANIVELE FENETRE	
3	02112-06165	4	TORNILLO	SCREW	VIS	
4	09160-06074	4	ARANDELA	WASHER	RONDELLE	
5	72310-70A00	1	SOPORTE COLUMNA	HOLDER STEERING	SUPPORT COLUMNE	U.K.
	72310A70A20	1	SOP COLUMNA DIRC	HOLDER STEERING	SOPPORT COLUMNE	
6	02142-06165	6	TORNILLO SOPORTE	BOLT BRACKET	VIS SUPPORT	
7	50747-00000	2	TIRANTA PANEL	STAY INSTRUMENTS	TIRANT PANNEAU	
8	02142-06165	6	TORNILLO	SCREW	VIS	
9	72321-80001	1	PLACA SOP COLUMNA	PLATE HOLDER	PLAQUE SUP COLONNE	
10	73810-83030	1	TIRANTA	STAY	TIGE	
11	03141-06125	1	TORNILLO	SCREW	VIS	
12	73811-70A00	2	TAPA PANEL GRIS	COVER PANEL	COUVERCLE PANNEAU	
	73811A70A00	1	TAPA N1 MARRON	COVER N1 BROWN	COUVERC N1 MARRON	
13	73812-70A01	1	TAPA N3 GRIS	COVER N3	COUVERCLE N3	
	73812A70A01	1	TAPA N3 MARRON	COVER N3 BROWN	CUEVERC N3 MARRON	
14	73821A70A01	1	TAPA PANEL LD GRIS	COVER PANEL RH	COUVERCLE PANNEAU CD	
	73821A70A11	1	TAPA PANEL LD MARRON	COVER N2 BROWN	COUVERC N2 MARRON	
	73831-70A01-5ES	1	TAPA PANEL	COVER PANEL	COUVERCLE PANNEAU	U.K.
15	73815-70A00	1	SOPORTE CENTRAL	BRACKET CENTER	SUPPORT CENTRALE	
16	02142-06123	1	TORNILLO	SCREW	VIS	
	03241-06126	2	TORNILLO	SCREW	VIS	
17	73813-83010	1	CUBIERTA INF GRIS	COVER PANEL LOWER	COUVERCLE INF GRIS	
	73813A83010	1	CUBIERTA INF MARRON	COVER LOWER BROWN	COUVER INF MARRON	
18	03141-06125	2	TORNILLO	SCREW	VIS	
19	03241-05165	1	TORNILLO	SCREW	VIS	
20	09148A05013	2	TUERCA	NUT	ECROU	
21	73825-70A00	1	SOPORTE PANEL	PANEL BRACKET	SUPPORT PANNEAU	
22	03241-05125	2	TORNILLO	SCREW	VIS	
23	77811A83060	1	ANAGRAMA GUANTERA	EMBLEM INSTRUMENTS	ANAGRAMME BOITE GANT	

FIG.68

J - 07

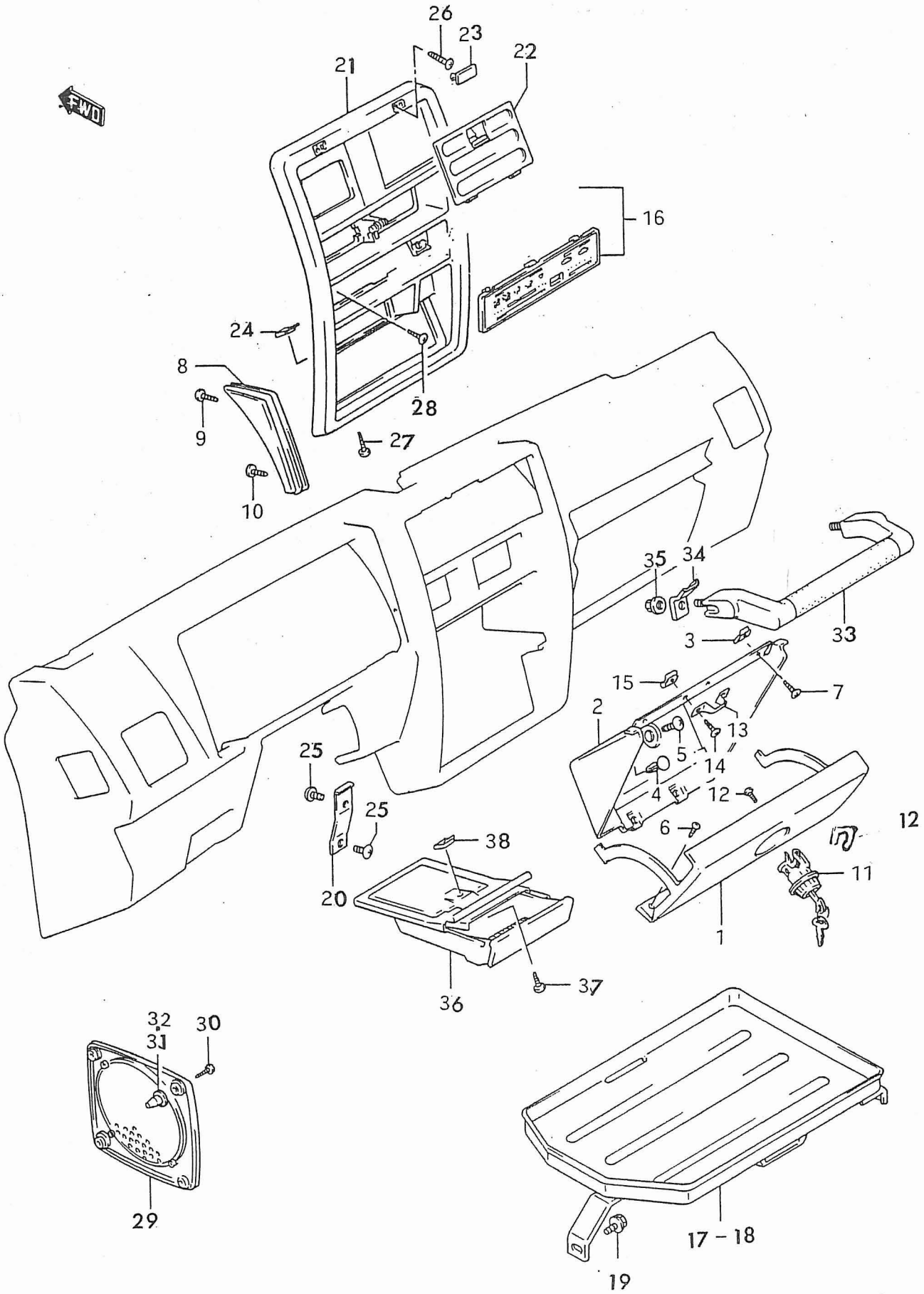
FWD
26
23
22
21
16
24
8
9
28
27
10
35
34
33
3
15
7
2
13
5
14
4
12
6
12
11
1
25
25
38
20
36
37
32
31
30
29
17 - 18
19

PUBLICACION N:A00523 GRUPO=CATAG SJ-413 SAMURAI SUBGRUPO=1J07GUANTERA
EDICION N: 3 GROUP=CATAG S-413 SAMURAI SUBGROUP=1J07GROVE BOX
GROUPE=CATAG SJ-413 SAMURAI SUBGROUPE=1J07BOITE A GANTS

N.FIG PLATE N.FIG	N.PIEZA PARTNUMBER N.PIECE	CAN QTY OUT	DENOMINACION	DESCRIPTION	DENOMINATION	OBSERVACIONES
1	73411A70A00	1	PANEL GUANTERA GRIS	PANEL GROVE BOX	COUVERC.GANSTS GRIS	
	73411B70A00	1	TAPA GUANTERA MARRON	COVER BOX BROWN	COUVERC.GANTS MARRON	U.K.
2	73451A70A00	1	CAJA GUANTERA	GROVER BOX	BOITE GANTS	U.K.
	73451A70A10	1	CAJA GUANTERA	GROVER BOX	BOITE A GANTS	
3	09148A50005	2	TUERCA	NUT	ECROU	
4	09409-10301-5CW	1	CLIP	CLIP	CLIP	
5	02142-06164	1	TORNILLO	SCREW	VIS	
6	03141-04165	3	TORNILLO	SCREW	VIS	
7	03242-05165	2	TORNILLO	SCREW	VIS	
8	73823-70A10-281	1	EMBELLECEDOR	ESCUTCHEON	ENJOLIVEUR	
	73833-70A00-281	1	EMEBELLECEDOR	ESCUTCCHEON	ENJOLIVEUR	U.K.
9	03541-05123	1	TORNILLO	SCREW	VIS	
10	03541-05163	1	TORNILLO	SCREW	VIS	
11	51588-00000 JUSE	1	CERRADURA GUANTERA	LOCK ASSY GLOVE BOX	FERMETURE A GANTS	D 78034
	73910A80000	1	CERRADURA GUANTERA	LOCK ASSY GLOVE BOX	FERMETURE	H 78033
12	08001-00000	1	CLIP CERRADURA	CLIP LOCK	CLIP FERMETURE	
13	50323-00000	1	GOLPEADOR	STRIKER	AMORTISSEUR	
14	03241-05205	2	TORNILLO	SCREW	VIS	
15	09148A05013	2	TUERCA	NUT	ECROU	
16	73850-70A00	1	PANEL CENTRAL	CENTER PANEL	PANNEAU CENTRAL	U.K.
	73850A70A00	1	PANEL CONTROL	CONTROL PANEL	PANNEAU CONTROLE	
17	75610B83020	1	BANDEJA PAQUETES	TRAY PACKAGE	PLATEAU PAQUET	
18	75610C83000	1	BANDEJA PAQUETES	TRAY PACKGE	PLATEAU PAQUET	U.K.
19	02142-06106	2	TORNILLO	SCREW	VIS	
20	73824-83000	1	SOPORTE TUNEL	STAY TUNER	SUPPORT	
21	73841A70A00	1	PANEL CONSOLA	PANEL CONSOLE	PANNEAU CONSOLE	
22	73842-70A00	1	TAPA PANEL	COVER PANEL	COUVERCLE PANNEAU	
23	73843-70A01	2	TAPON	PLUG	BOUCHON	
24	09148A05004	2	TUERCA	NUT	ECROU	
25	02142-06125	2	TORNILLO	SCREW	VIS	
26	03111-05303	2	TORNILLO	SCREW	VIS	
27	03241-05165	2	TORNILLO	SCREW	VIS	
28	03541-05123	2	TORNILLO	SCREW	VIS	
29	76411-80000	2	TAPA ALTAVOZ	COVER	COUVERCLE	
30	03141-04168	8	TORNILLO	SCREW	VIS	
31	09159A04002	8	TUERCA	NUT	ECROU	
32	09159B04002	8	CASQUILLO	BUSH	BAGUE	
33	84410-70A00	1	ASIDERO GRIS	GRIP FRONT	ANSE AVANT	
	84410A70A00	1	ASIDERO MARRON	GRIP BROWN	ANSE MARRON	
34	84422-70A00	2	ARANDELA	WASHER	RONDELLE	
35	08316-26086	1	TUERCA	NUT	ECROU	

FIG.68-1

J - 08

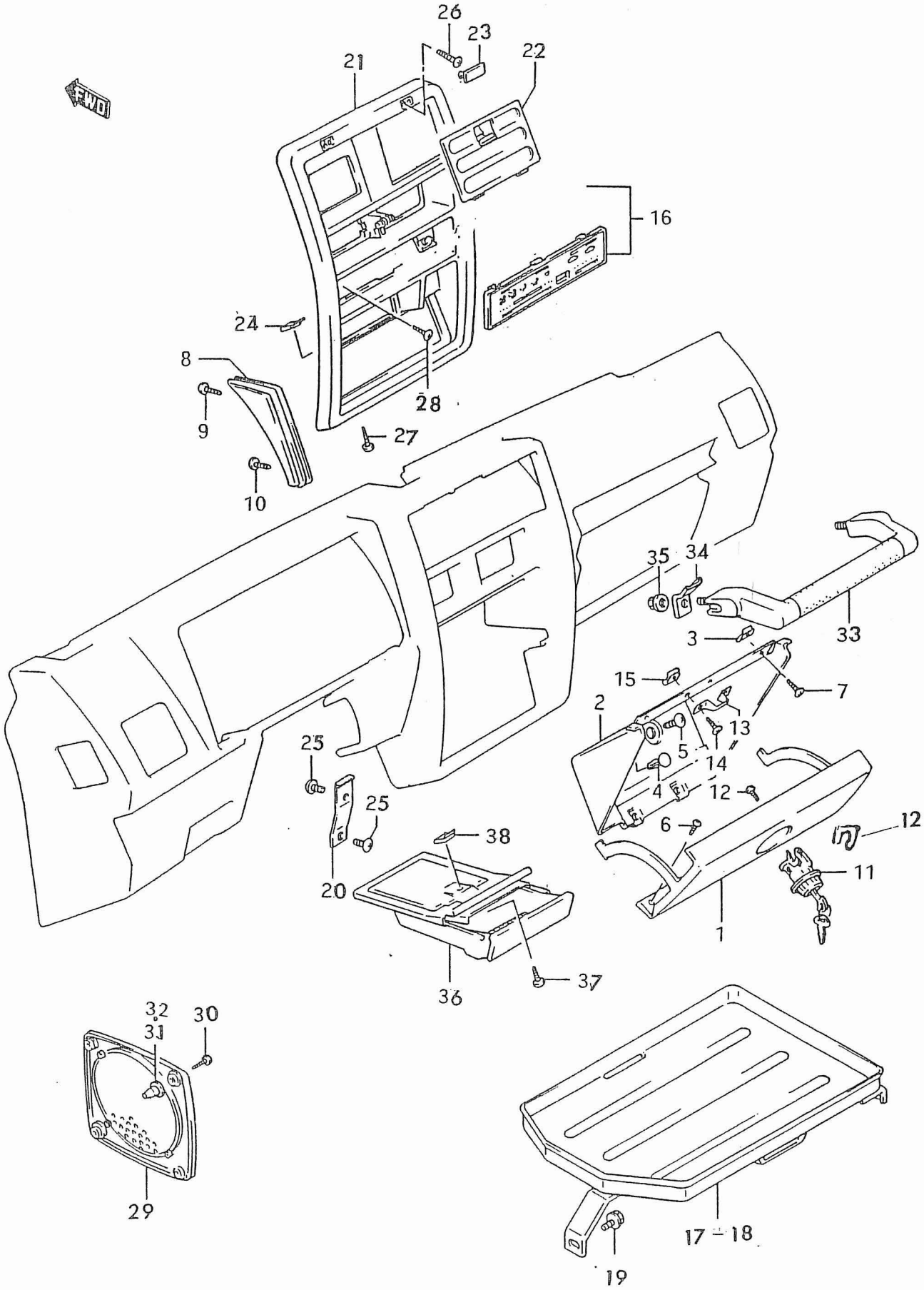
FWD
26
23
22
21
16
24
8
9
28
27
10
35
34
33
3
15
7
2
13
5
14
4
12
6
12
11
1
25
25
38
20
36
37
32
30
31
29
17
18
19

PUBLICACION N:A00523 GRUPO=CATAG SJ-413 SAMURAI SUBGRUPO=1J08CENICERO
EDICION N: 3 GROUP=CATAG S-413 SAMURAI SUBGROUP=1J08ASTHRAY
GROUPE=CATAG SJ-413 SAMURAI SUBGROUPE=1J08CENDRURE

N.FIG PLATE N.FIG	N.PIEZA PARTNUMBER N.PIECE	CAN QTY OUT	DENOMINACION	DESCRIPTION	DENOMINATION	OBSERVACIONES
36	89810A70A00	1	CENICERO	ASHTRAY	CENDRIERE	
37	03241-05106	1	TORNILLO	SCREW	VIS	
	03241-05108	1	TORNILLO	SCREW VIS	VIS	
38	09148A05004	1	TUERCA	NUT	ECROU	
	09148A05013	1	TUERCA	NUT	ECROU	

FIG. 69

D - 05

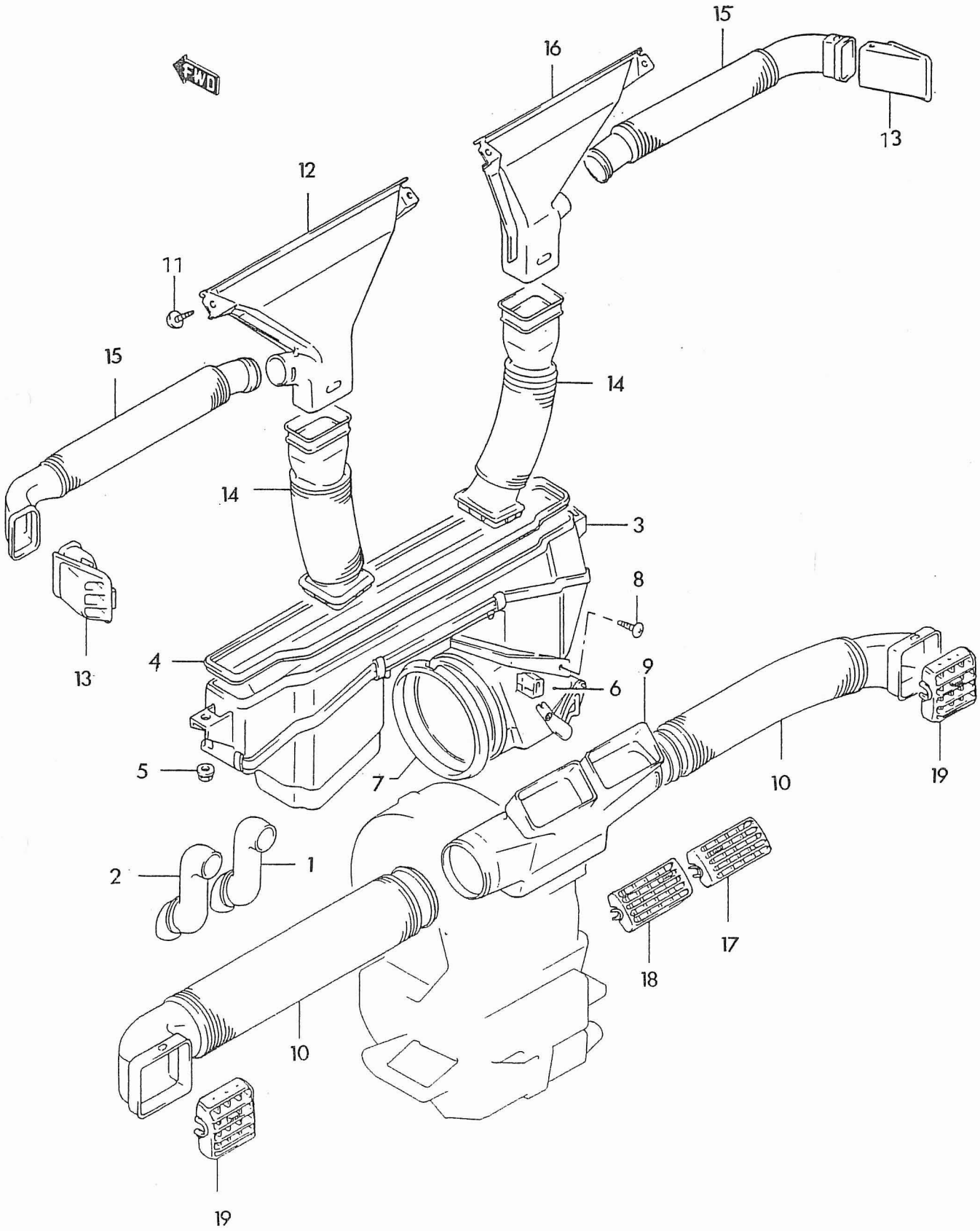

PUBLICACION N:A00523 GRUPO=CATAG SJ-413 SAMURAI SUBGRUPO=1D05CONDUCTOS CALEFA
EDICION N: 3 GROUP=CATAG S-413 SAMURAI SUBGROUP=1D05VENTILAT.HEATER
GROUPE=CATAG SJ-413 SAMURAI SUBGROUPE=1D05ENS.VENTILATION

N.FIG PLATE N.FIG	N.PIEZA PARTNUMBER N.PIECE	CAN QTY OUT	DENOMINACION	DESCRIPTION	DENOMINATION	OBSERVACIONES
1	73641-83001	1	MANGUITO VENTIL LD	HOSE RH	MANCHON CD	
2	73642-83001	1	MANGUITO VENTIL LI	HOSE LH	MANCHON CG	
3	73610-83022	1	CAMPANA VENTILACION	HOUSING FAN	CARCAISSE VENTILAT.	
4	73613A83000	1	TIRA SELLANTE	SEALING	JOINT	
5	08316A16063	2	TUERCA	NUT	ECROU	
6	74250A83021	1	CONTROL CALEFECCION	BOX HEATER CONTROL	BOITE CONTROL	
7	74259-83000	1	TIRASELLANTE	SEALING	JOINT	
8	03541-04106	2	TORNILLO	SCREW	VIS	
9	74611-70A00	1	CONDUCTO VENTILACION	HOSE VENTILATION	TUBE VENTILATION	
10	74612-70A00	2	TUBO VENT LATERAL	HOSE SIDE	TUYAU VENT LAT	
11	03541-05126	4	TORNILLO	SCREW	VIS	
12	73660-83001	1	BOQUILLA LI	NOZZLE LH	PAVILLON CG	
13	73671-83000	2	BOQUILLA LAT	NOZZLE SIDE	PAVILLON LAT	
14	74614-83000	2	TUBO DESEMPA\	HOSE DEFROSTER	MANCHON ANTI-BUEC	
15	74615-70A00	2	TUBO DESEMP LAT	HOSE DEFROST SIDE	MANCHON ANTI-BUEC	
16	73650-83001	1	BOQUILLA LD	NOZZLE RH	PAVILLON CD	
17	73210A70A00	1	DEFLECTOR LD	LOUVER VENT RH	DEFLECTOUR CD	
18	73220-70A00	1	DEFLECTOR LI	LOUVER VENT LH	DEFLECTEUR CG	
19	73230-70A00	2	DEFLECTOR LATERAL	LOUVER SIDE	DEFLECTEUR LAT	

FIG.70-1

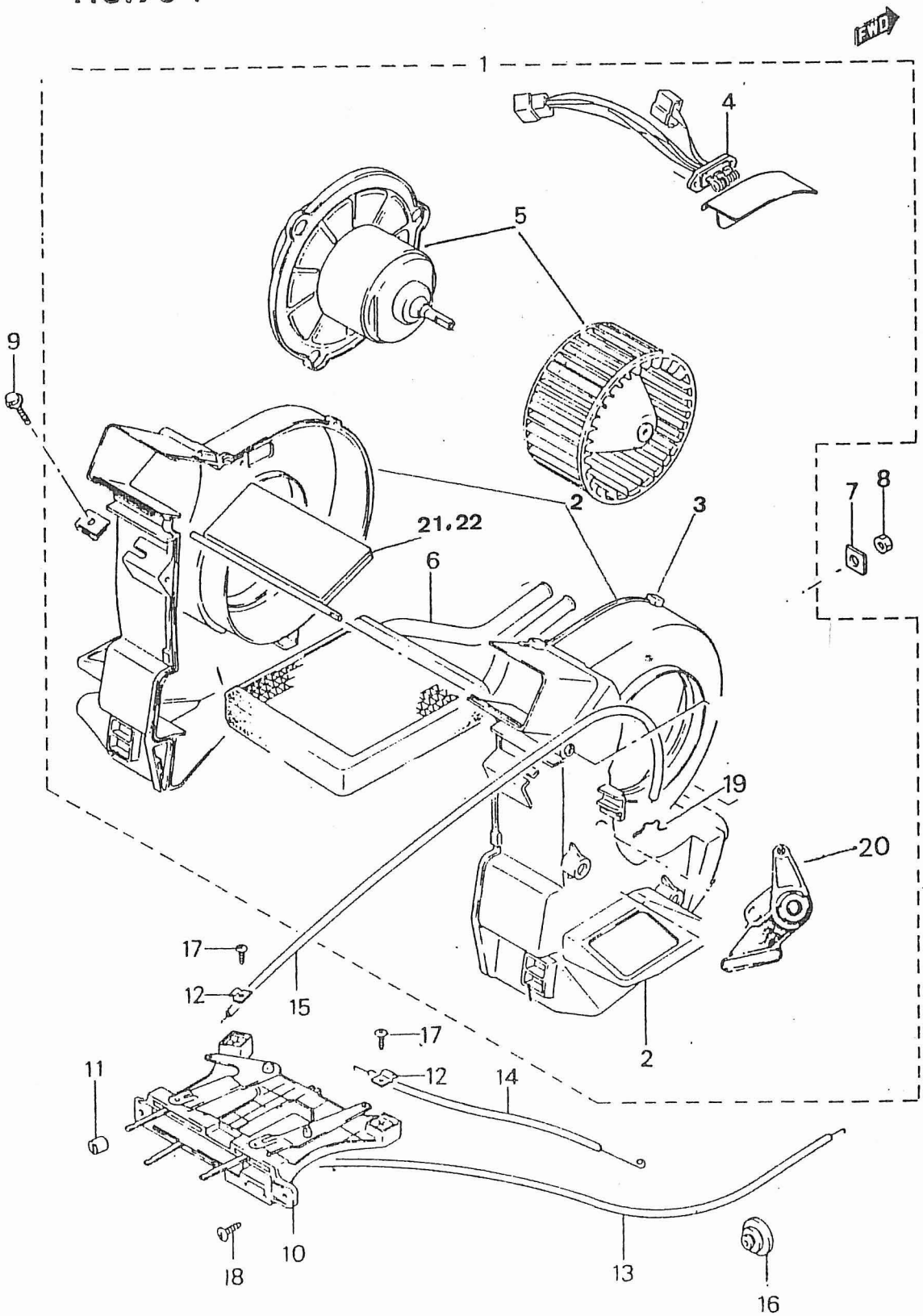

PUBLICACION N:A00523 GRUPO=CATAG SJ-413 SAMURAI SUBGRUPO=1D06CALEFACCION
EDICION N: 3 GROUP=CATAG S-413 SAMURAI SUBGROUP=1D06HEATER ASSY
GROUPE=CATAG SJ-413 SAMURAI SUBGROUPE=1D06ENS.CHAUFFAGE

N.FIG PLATE N.FIG	N.PIEZA PARTNUMBER N.PIECE	CAN QTY OUT	DENOMINACION	DESCRIPTION	DENOMINATION	OBSERVACIONES
1	74100-70A01	1	CONJ.CALEFACTOR	HEATER ASSY	ENS CHAAUFFAGE	U.K.
	74100A70A20	1	CONJ CALEFACCION	HEATER ASSYS	ENS CHAUFFAGE	
2	00000A00563	2	SEMI-CAJAS	HALT BOX	DEMI-BOITES	
3	00000A00564	2	GRAPA UNION CAJAS	HOLDER FIX BOX	GRAPE FIJ. BOITES	
4	00000A00382	1	RESISTENCIA	RESISTER	RESISTANCE	
5	00000A00383	1	MOTOR VENTILADOR	MOTRO ASSY	ENS MOTEUR	
6	00000A00384	1	RADIADOR	RADIATOR	RADIATOR	
7	74172-80000	1	FORRO CALEFACCION	PAD	GUARNITURE	
8	08316A16068	1	TUERCA	NUT	ECROU	
9	01514-06166	2	TORNILLO	ECREW	VIS	
10	74400-70A00	1	PALANCAS CONTROL	LEVER CONTROL	LEVIER CONTROL	U.K.
	74400A70A00	1	PALANCA CONTROL	LEVER ASSY	ENS LEVIER	
11	00000A00386	4	POMO PALANCA	KNOB LEVER	BOUTON LEVIER	
	74417-70A00-281	4	POMO PALANCA	KNOB LEVER	POIGNEE KEVIER	U.K.
12	00000A00387	3	GRAPA	HOLDE CABLE	GRAPE	
13	74512-83020	1	CABLE CONTROL VALVUL	WIRING WATER	CABLE VALVE	
14	74513-70A20	1	CABLE AIRE	WIRING AIR	CABLE AIRE	
15	74514A83000	1	CALBE CONTROL HABITA	WIRIN ROOH	CABLE HABITAT	
16	82191A80002	1	PASACABLES	BOOT	PASSACABLE	
17	00000A00388	3	TORNILLO	SCREW	VIS	
18	03541-04126	2	TORNILLO	SCREW	VIS	
19	00000A00461	1	CLIP CABLE MANDO	CLIP CABLE	CLIP CABLE	
20	00000A00515	1	PALANCA	LEVER	LEVIER	
21	00000A00663	1	TRAMPILLA SUP.	DAMPER UPPER	TRAMPILLE SUP.	
22	00000A00653	1	TRAMPILLA INF.	DAMPER LOWER	TRAMPILLE INF.	

FIG.72

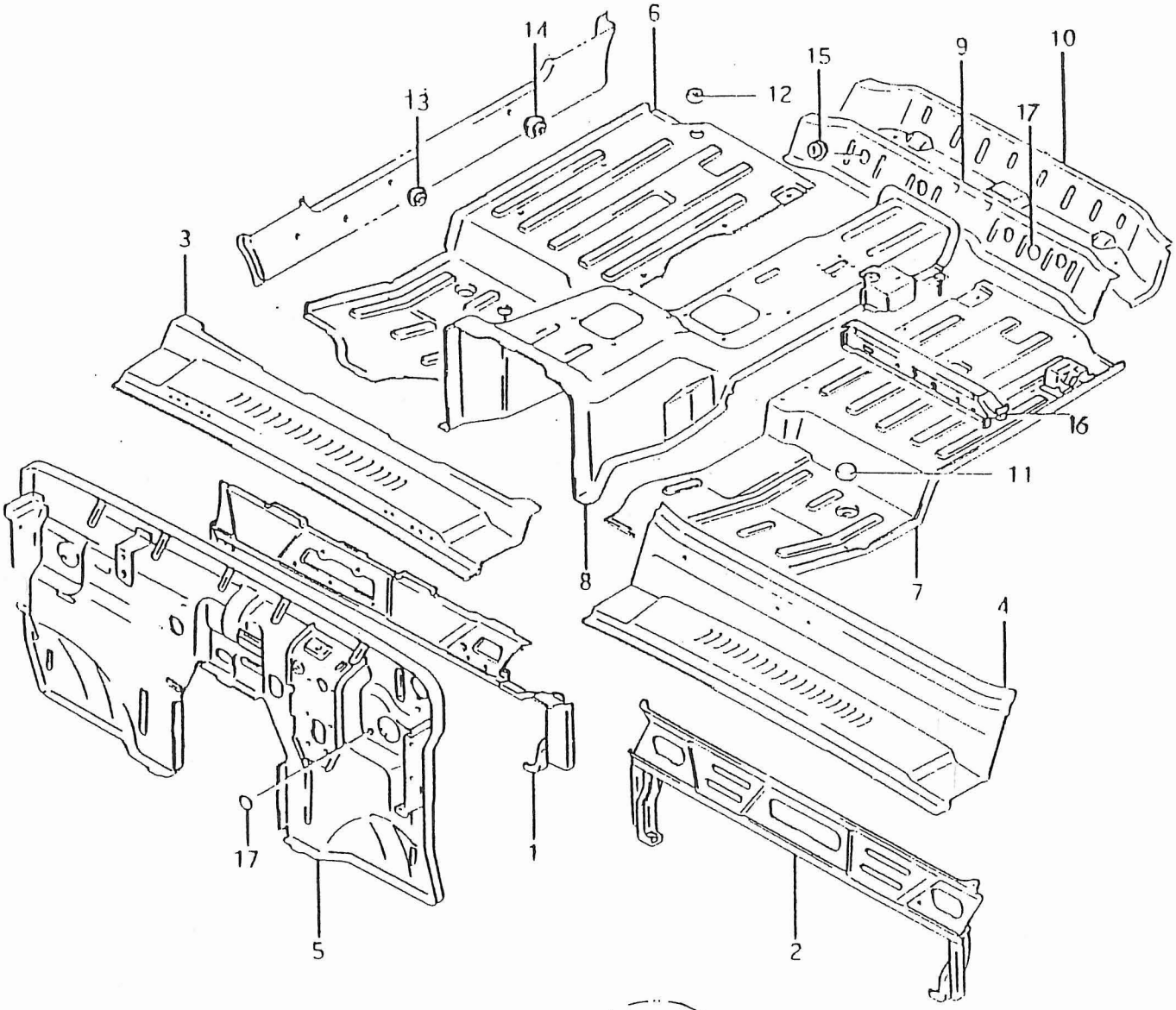

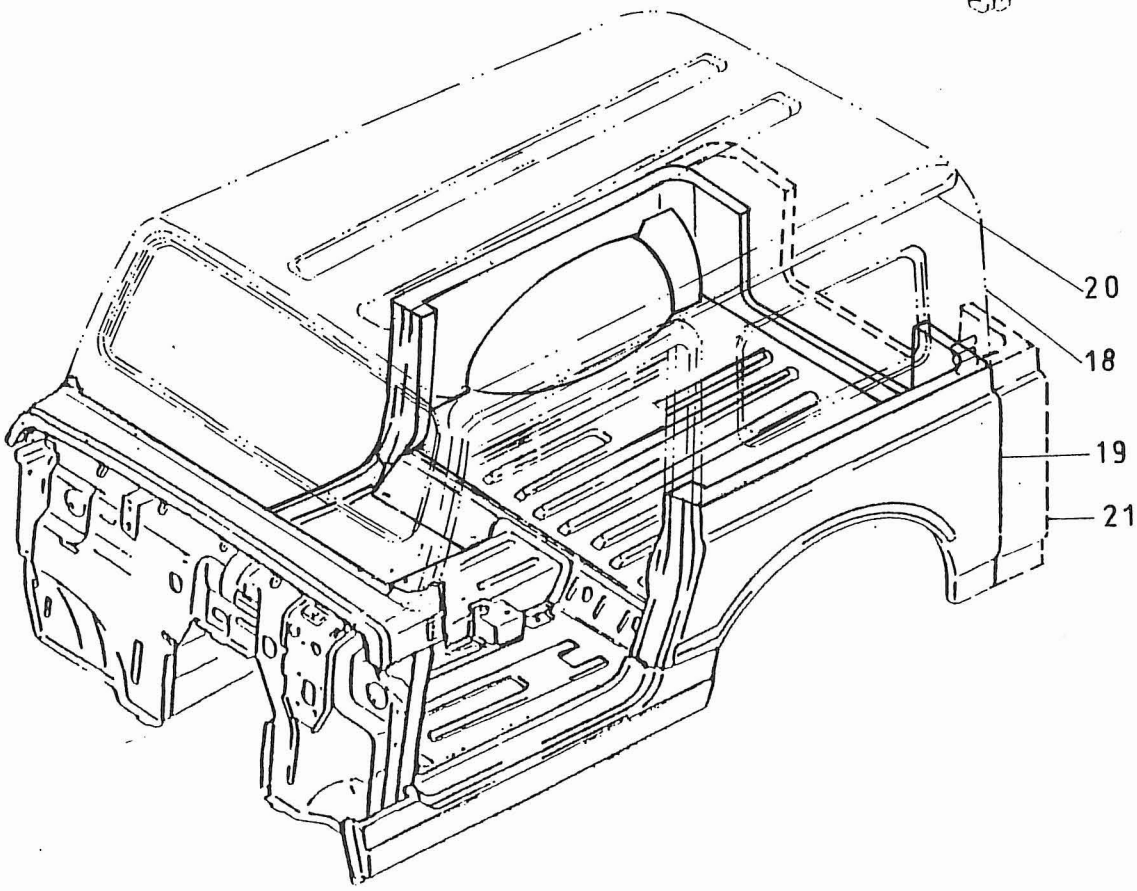

PUBLICACION Nº A00523

EDICION Nº 3 BIS

GRUPO-CATAG. SJ-413 SAMURAI

GROUP-CATAG. SJ-413 SAMURAI

GROUPE-CATAG. SJ-413 SAMURAI

SUBGRUPO J09 SALP. PISO

SUBGROUP J09 PANEL CENTER

SUBGROUPE J09 TABLEAU/PLANCHER

Nº FIG.	Nº PIEZA	CANT.	DENOMINACION	DESCRIPTION	DENOMINATION	OBSERVACIONES
1	59600A83010	1	PANEL TRAS SUP MOD-J	PANEL REAR UPPER J	PANEAU SUP AR MOD-J	
2	59600-83131	1	PANEL TRAS SUP MOD-V	PANEL REAR UPPER V	PANEAU SUP AR MOD-V	
3	59300-83001	1	PANEL TABLERO MOD-J	PANEL DASH MOD-J	PANEAU TABLIER MOD-J	
4	59300-80142	1	PANEL TABLERO MOD-V	PANEL DASH MOD-V	PANEAU TABLIER MOD-V	
5	61100A83022	1	PANEL SALPIC. MOD-J	PANEL DASH MOD-J	PANEAU TABLIER MOD-J	
	61100A83080	1	PANEL SALPIC. MOD-V	PANEL DASH MOD-V	PANEAU TABLIER MOD-V	
	61100A83081	1	PANEL SALPIC. MOD-V	PANEL DASH MOD-V	PANEAU TABLIER MOD-V	
6	61400A83040	1	PANEL PISO DEL L/D	PANEL FRONT FLOOR RH	PANEAU PLANCHER CD	
7	61500-83010	1	PANEL PISO DEL L/I	PANEL FRONT FLOOR LH	PANEAU STAGE AV CG	
8	61600-83011	1	PANEL PISO TUNEL	PANEL TUNNEL	PANEAU TUNEL	
	61600A70A00	1	PANEL PISO TUNEL	PANEL FLOOR TUNNEL	PANEAU TUNEL	
9	61811-83000	1	MIEMBRO PISO CENTRAL	MEMBER CENTER FLOOR	MEMBRE PLANCHER CENT	
10	61820-83010	1	CONJ. PISO CENTRAL	CENTER FLOOR ASSY	ENSE ETAGE CENT	
11	09250-40002	4	TAPON PISO TRASERO	PLUG	BOUCHON	
12	09250-30002	2	TAPON PISO TRASERO	PLUG	BOUCHON	
13	50027-00000	4	TAPON PISO TRASERO	PLUG	BOUCHON	
14	09250-25007	2	TAPON PISO TRASERO	PLUG	BOUCHON	
15	50027-00000	4	TAPON PISO TRASERO	PLUG	BOUCHON	
16	61550-80001	1	REFUERZO DEL. ASIENTO	REINFORCEMENT LH	RENFORT CG	
17	67627-70000	2	PELICULA	FILM	FILM	
18	50992-00000	1	CARROCERIA MOD-V	BODY MOD-V	CARROCERIE MOD-V	
19	50993-00000	1	CARROCERIA MOD-J	BODY MOD-J	CARROCERIE MOD-J	
20	BODY VE-SAM	1	BODY T/ELEVADO	BODY HIGH ROOF	BODY TOIT HAUTE	
21	00000A00702	1	CARROC. LONG BODY	BODY LONG-BODY	BODY LONGUE	

FIG.73

J -10

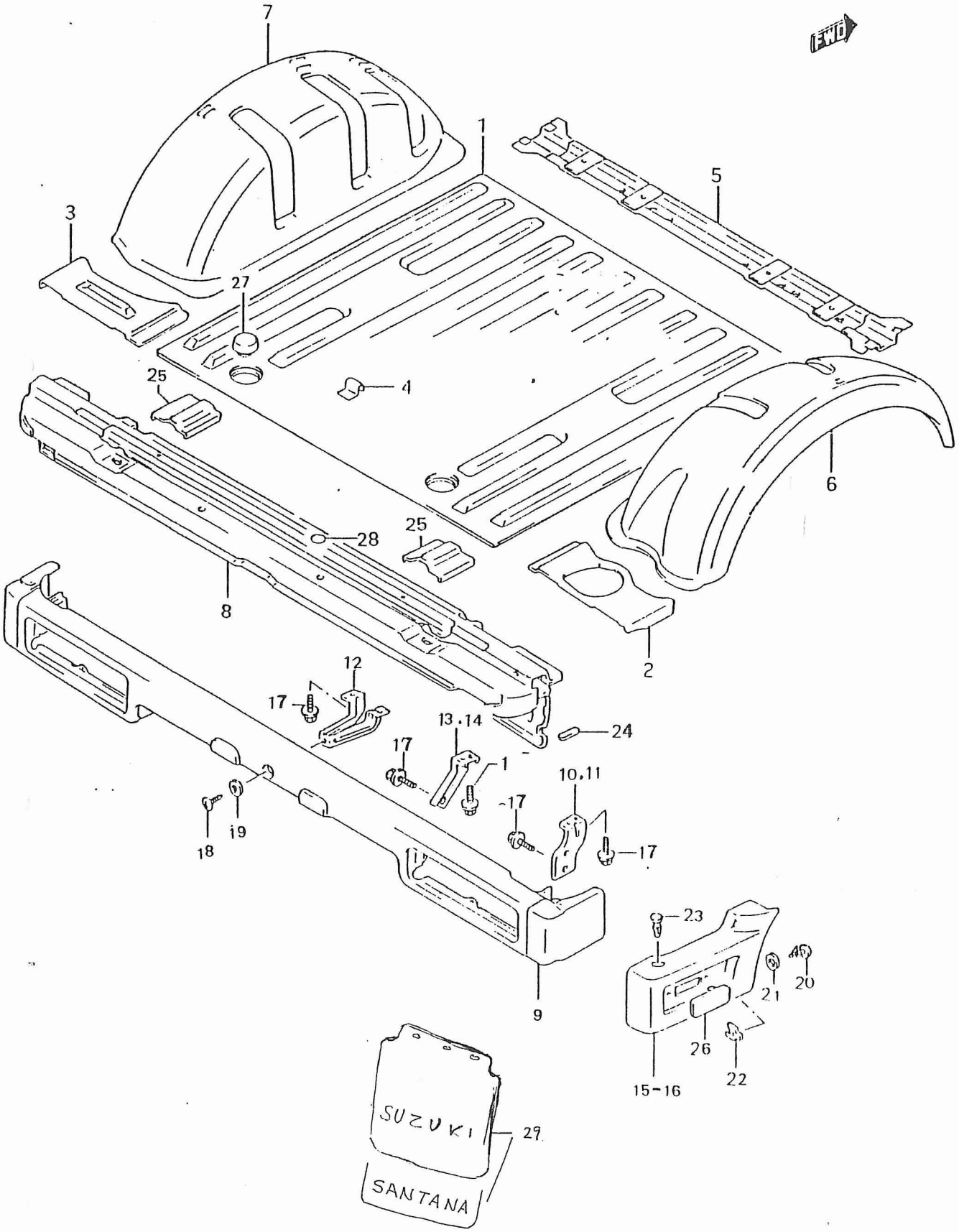
7
1
5
3
27
25
4
6
28
25
8
2
12
17
13.14
24
17
1
10.11
17
18
19
17
23
45
20
21
26
22
15-16
9
SUZUKI
29
SANTANA

PUBLICACION N:A00523 GRUPO=CATAG SJ-413 SAMURAI SUBGRUPO=1J10PISO TRASERO
EDICION N: 3 GROUP=CATAG S-413 SAMURAI SUBGROUP=1J10REAR FLOOR
GROUPE=CATAG SJ-413 SAMURAI SUBGROUPE=1J10PLANCHER ARRIERE

N.FIG PLATE N.FIG	N.PIEZA PARTNUMBER N.PIECE	CAN QTY OUT	DENOMINACION	DESCRIPTION	DENOMINATION	OBSERVACIONES
1	62111A83090	1	PANEL PISO TRASERO	PANEL REAR FLOOR	PANNEAU PLANCHER	
2	62112A80000	1	PANEL PISO LATER LD	PANEL FLOOR SIDE RH	PANNEAU PLANCHER	
3	62113-80000	1	PANEL PISO LATER LI	PANEL FLOOR SIDE LH	PANNEAU ESTAGE LAT G	
4	73722-63001	1	GRAPA	HOOK STOPPER BAND	GRAPE	
5	62120A83020	1	REFUERZO PISO	REINFORCEMENT FLOOR	RENFORT ETAGE	
6	62211-80002	1	PANEL RUEDA LD	PANEL WHEEL RH	PANNEAU ROUE CD	
7	62311-80002	1	PANEL RUEDA LI	PANEL WHEEL LH	PANNEAU RUOE CG	
8	62500-70A30	1	SOPORTE PISO POST	TAILMEMBER FLOOR	SUPORT ETAGE ARRIERE	
9	71810-83301	1	CONJ. PARAGOLPES	BUMPER REAR	PARECHOC ARRIERE	
10	71821-80300	2	SOPORTE LI	BRACKET LH	SUPPORT CG	
11	71822-80300	1	SOPORTE LD	BRACKET RH	SUPPORT CD	
12	71823-83301	1	SOPORTE CENTRAL	CENTER BRACKET	SUPPORT CENTRAL	
13	71824-83300	1	SOPORTE CENTRAL LD	BRACKET CENT RH	SUPPORT CENTRAL CD	
14	71825-83300	1	SOPORTE CENTRAL LI	BRACKET CENT LH	SUPPPORT CENTRA\ CG	
15	71831A83301	1	PROTECTOR TRAS LD	REAR GUARD RH	PROTECT AR CD	
16	71832A83301	1	PROTECTOR TRAS LI	REAR GUARD LH	PROTECT AR CG	
17	01514-06123	16	TORNILLO	SCREW	VIS	
18	09125-06022	1	TORNILLO	SCREW	VIS	
19	09161-06008	1	ARANDELA	WASHER	RONDELLE	
20	09132-05029	4	TORNILLO	SCREW	VIS	
21	08322-21059	4	ARANDELA	WASHER	RONDELLE	
22	09148A05013	4	TUERCA	NUR	ECROU	
23	09409-07311	4	CLIP	CLIP	CLIP	
24	72876-80000	2	JUNTA	SEAL	JOINT	
25	62114C83000	4	REFUERZO ASIENTO	REINF REAR SEAT	RENFORT SIEGE	
26	71833-70A10	2	TAPA PROTECTOR	CAP	COUVERCLE	
27	09250-40002	2	TAPON PISO	CAP FLOOR	BOUCHON	
28	67627-70000	2	LAMINA ADHESIVA	FIL MEMBER	ADHESIVE	
29	72261A80002	2	FALDILLA TRASERA	REAR FLAP	GARDE-BOUE ARRIERE	
	50053-00000	2	" "	" "	" - " "	FRANCIA

FIG.73.1

J - 11

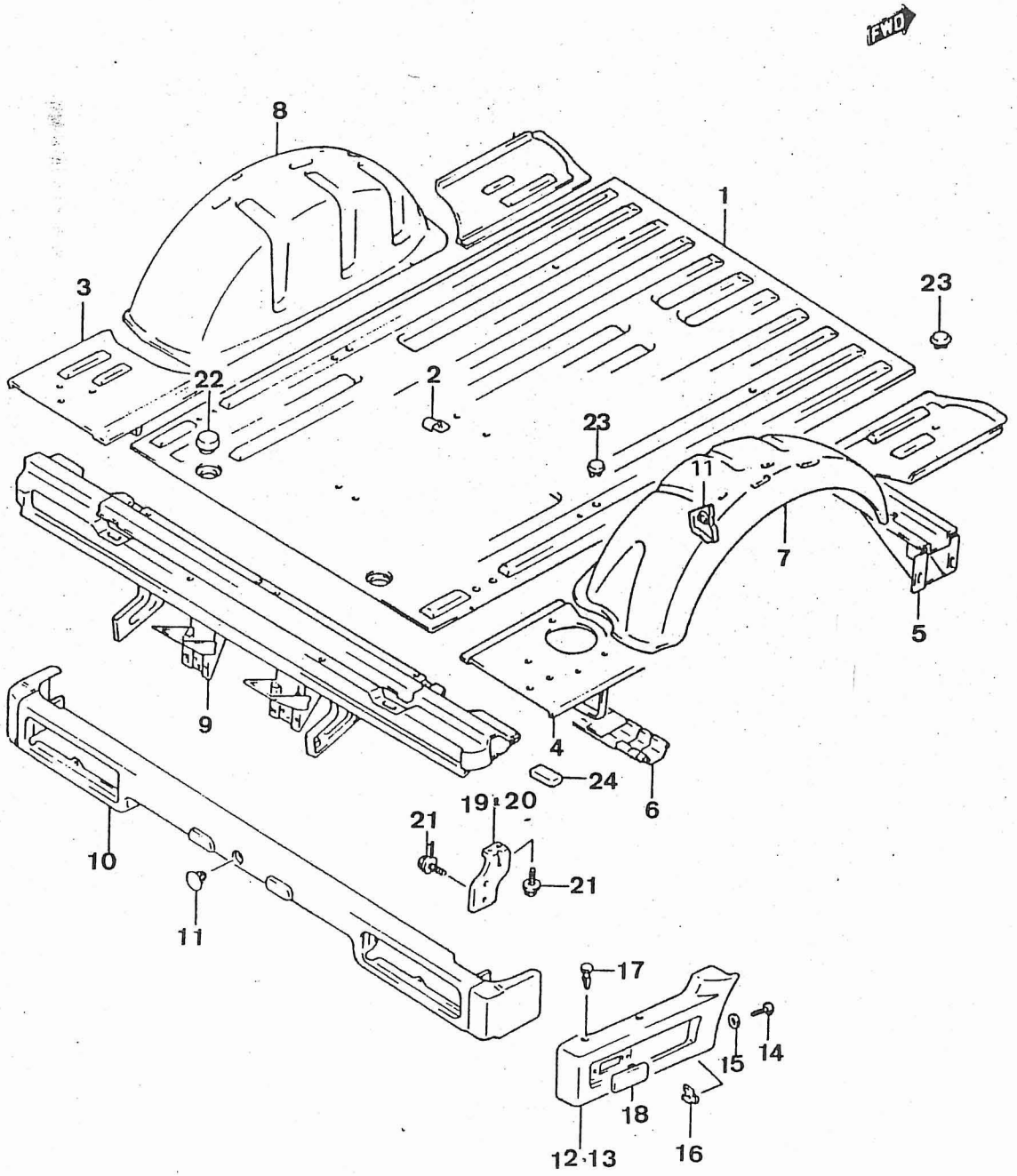

PUBLICACION N:A00523 GRUPO-CATAG SJ-413 SAMURAI SUBGRUPO-1J11PISO LONG BODY
EDICION N: 3 GROUP-CATAG S-413 SAMURAI SUBGROUP-1J11FLOOR LONG BODY
GROUPE-CATAG SJ-413 SAMURAI SUBGROUPE-1J11ETAGE LONG BODY

N.FIG PLATE N.FIG	N.PIEZA PARTNUMBER N.PIECE	CAN QTY OUT	DENOMINACION	DESCRIPTION	DENOMINATION	OBSERVACIONES
1	62111A83210	1	PANEL PISO TRAS.	PANEL REAL FLOOR	PANNEAU PLANCHER	LONG BODY
2	73722-63001	1	GRAPA	HOOK	GRAPE	LONG BODY
3	62150-83290	1	PANEL LAT.TRAS LI	PANEL SIDE RR LH	PANNEAU LAT. AR CG	LONG BODY
4	62140A83290	1	PANEL LAT.TRAS LD	PANEL SIDE RR RH	PANNEAU LAT. AR CD	LONG BODY
5	62160-83210	1	REFUERZO PISO	REINFORCEMENT FLOOR	RENFOR ETAGE	LONG BODY
6	62180-83211	1	REFUERZO PISO TRAS	REINFORC.FLOOR RR	RENFOR.ETAGE AR	LONG BODY
7	62211-80002	1	PANEL RUEDA LD	PANEL WHEEL RH	PANNEAU ROUE CD	LONG BODY
8	62311-80002	1	PANEL RUEDA LI	PANEL WHEEL LH	PANNEAU ROUE CG	LONG BODY
9	62500-80310	1	TRAVESA\O TRAS	TAILEMEBER FLOOR RR	SUPPORT ETAGE AR	LONG BODY
10	71810-83301	1	PARAGOLPES TRAS	BUMPER REAR	PARACHOC ARRIERE	LONG BODY
11	09409-09303	1	TAPON	CAP	BOUCHON	LONG BODY
12	71831-83310	1	PROTEC.TRAS LD	REAR GUARD RH	PROTEC.AR CD	
13	71832-83310	1	PROTEC.TRAS.LI	REAR GUARD LH	PROTECT.AR CG	
14	09132-05029	4	TORNILLO	SCREW	VIS	LONG BODY
15	08322-21059	4	ARANDELA	WASHER	RONDELLE	LONG BODY
16	09148A05013	4	TUERCA	NUT	ECROU	LONG BODY
17	09409-07311	4	CLIP	CLIP	CLIP	LONG BODY
18	71833-70A10	2	TAPA	CAP	COUVERCLE	LONG BODY
19	71821-80300	1	SOPORTE LI	BRACKET LH	SUPPORT CG	LONG BODY
20	71822-80300	1	SOPORTE LD	BRACKETY RH	SUPPORT CD	LONG BODY
21	01514-06123	8	TORNILLO	SCREW	VIS	
22	09250-40002	2	TAPON	CAP	BOUCHON	LONG BODY
23	09409-09303	4	TAPON	CAP	BOUCHON	LONG BODY
24	72876-80000	2	JUNTA	SEAL	JOINT	LONG BODY

FIG.74

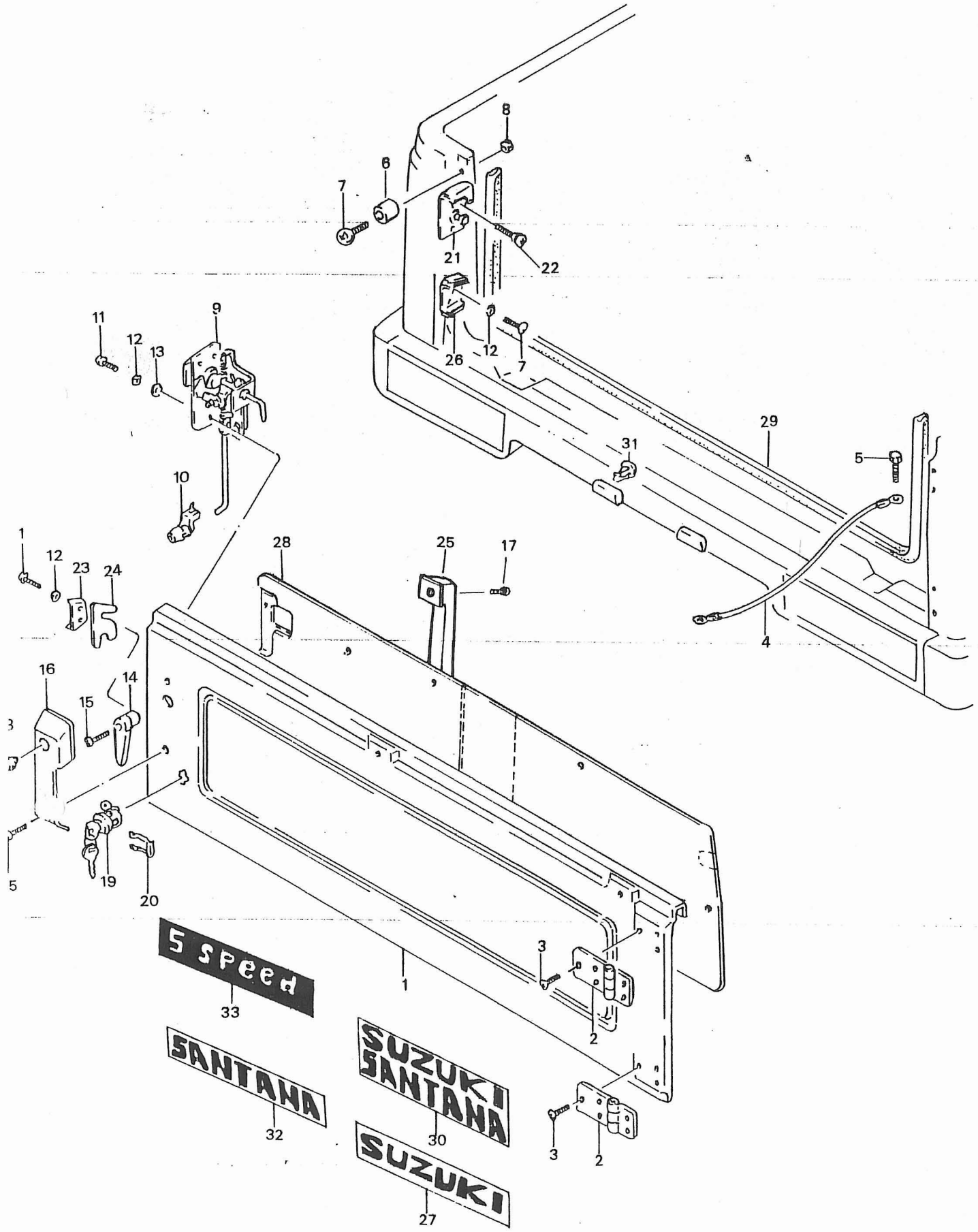
8
6
7
21
22
26
12
7
11
12
13
9
10
29
31
5
1
12
23
24
28
25
17
4
16
14
15
5
19
20
5 Speed
33
1
3
2
SANTANA
32
SUZUKI
SANTANA
30
3
2
SUZUKI
27

PUBLICACION Nº A00523

EDICION Nº 3 BIS

GRUPO-CATAG. SJ-413 SAMURAI — SUBGRUPO J12 COMPUERTA MOD J

GROUP-CATAG. SJ-413 SAMURAI — SUBGROUP J12 REAR GATE MOD J

GROUPE-CATAG. SJ-413 SAMURAI — SUBGROUPE J12 VOLET AR MOD J

Nº FIG.	Nº PIEZA	CANT.	DENOMINACION	DESCRIPTION	DENOMINATION	OBSERVACIONES
1	67700-80060	1	PANEL PTA. TRASERA	PANEL ASSY REAR GATE	ENS PANNEAU HAYON	
	51427-00000	1	PANEL PTA. TRASERA	PANEL ASSY REAR GATE	ENS PANNEAU HAYON	CS 2238-KIT
2	67790-80031	2	CONJ. BISAGRA	HINGE GATE	CHARNERE PORTE	
3	09125-08002	10	TORNILLO	SCREW	VIS	
4	72850-80002	1	CABLE PTA.	CABLE GATE	CABLE HAYON	
5	09100-06075	2	TORNILLO	SCREW	VIS	
6	72875-80001	1	APOYO PUERTA	CUSHDV GATE	APPUI HAYON	
7	02112-06163	5	TORNILLO	SCREW	VIS	
8	08313B11063	1	TUERCA	NUT	ECROU	
9	82550-80081	1	CERRADURA PTA. TRAS.	LOK GATE	FERMETURE PORTE	
10	09209-05016	1	PIEZA ACOPLAMIENTO	PIN	PIECE ACCOUPLEM.	
11	02112-06123	3	TORNILLO	SCREW	VIS	
12	08321A31063	7	ARANDELA	WASHER	RONDELLE	
13	08322-21068	3	ARANDELA	WASHER	RONDELLE	
14	82591-80060	1	MANECILLA CIERRE	HANDCCE LOCK	POI	
15	02112-06125	3	TORNILLO	SCREW	VIS	
16	82592-80060	1	CUBIERTA MANECILLA	COVER HANDLE	COUVERCLE	
17	02112-06256	2	TORNILLO FIJAC. ASIDERO	SCREW FIXING ARMREST	ANSE HAYON	CS 2238-KIT
18	09250-14006	1	TAPON	PLUG	BOUCHON	
19	82270A80100	1	CERRADURA	BARREL KEY	BARRILLET ET CLE C/G H 78033	
	51590-00000	1	CERRADURA	BARREL KEY	BARRILLET ET CLE C/G D 78034	
20	77461-80080	1	CLIP CERRADURA	CLIP	CLIP	
21	77810-60021	1	CERRADURA PUERTA	DOOR CLOCK	FERMETURE HAYON	
22	09126A08005	2	TORNILLO	SCREW	VIS	
23	78251-68201	1	TOPE	STOP MALE	BUTEE	
24	77891-63100	1	CASQUILLO	BUSH	BAGUE	
25	86211-79000	1	ASIDERO COMPUERTA	ARMREST REAR GATE	ANSE HAYON	
26	78261-68201	1	TOPE PTA.	STOP F MALE	CHOC	
27	77813D80010	1	ANAGR. SUZUKI NEGRO	EMBLEM. SUZUKI BLACK	SUZUKI NOIR	
	77813E80010	1	ANAGR. SUZUKI BLANCO	EMBLEM. SUZUKI WHITE	SUZUKI BLANC	
28	76140C83000	1	TAPICERIA PTA. TRAS.	TRIM GATE REAR	TAPIS HAYON	
	51794-00000	1	TAPICERIA PTA. TRAS.	TRIM GATE REAR	TAPIS HAYON	
29	84681A80001	1	TIRA SELLANTE	WEATHERSTRIP GATE	TIRE SELLANTE	
30	77813A80010	1	SUZUKI SANTANA NEGRO	EMBLEM. BLACK S.SUZUKI	SUZUKI SANTANA NOIR	
	77813B80010	1	SUZUKI SANTANA BLANCO	EMBLEM. WHITE S.SUZUKI	SUZUKI SANTANA BLANC	
31	09409C12301	7	CLIP GRIS	CLIP	CLIP	
	09409A12301	7	CLIP MARRON	CLIP BROWN	CLIP MARRON	
32	77813C80010	1	ROTULO SANTANA NEGRO	EMBLEM. BLACK SANTANA	ANAG. SANTANA NOIR	
	77813D80010	1	ROTULO SANTANA BLANCO	EMBLEM. WHITE SANTANA	ANAG. SANTANA BLANC	
33	50227-00000	1	ANAGRAMA 5 SPEED	ANAGRAM 5 SPEED	ANAGRAME 5 SPEED	

FIG. 75

J - 13

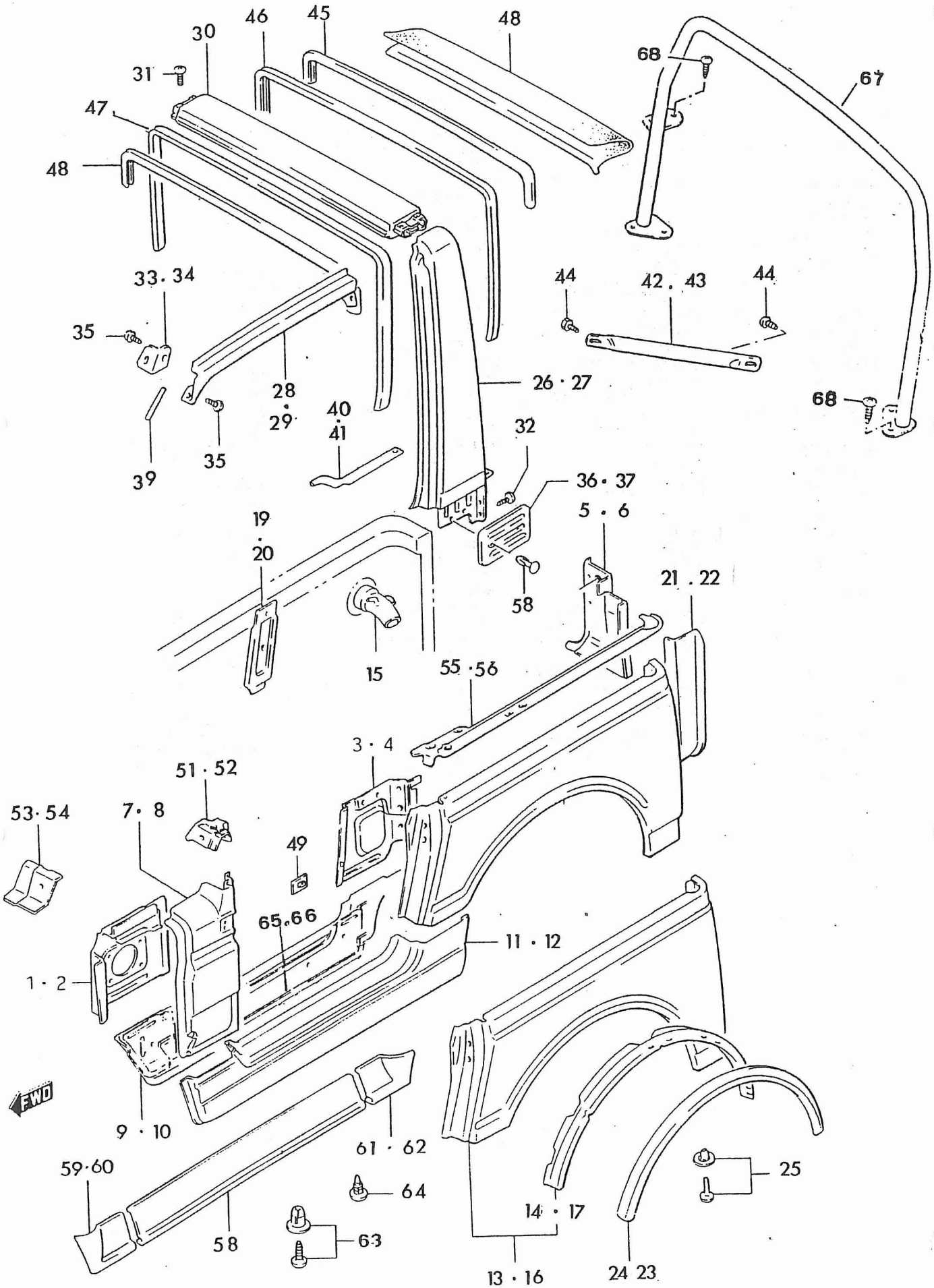

30
46
45
48
31
47
48
68
67
33 . 34
35
44
42 . 43
44
28 · 29
26 · 27
68
40 · 41
32
39
35
36 · 37
5 · 6
19 · 20
58
21 . 22
15
55 · 56
3 · 4
51 · 52
53 · 54
7 · 8
49
65 . 66
11 · 12
1 · 2
FWD
9 · 10
61 · 62
59 · 60
64
25
14 · 17
58
63
13 · 16
24 23

PUBLICACION N:A00523 GRUPO=CATAG SJ-413 SAMURAI SUBGRUPO=1J13LATERAL MOD J
EDICION N: 3 GROUP=CATAG S-413 SAMURAI SUBGROUP=1J13BODY SIDE MOD J
GROUPE=CATAG SJ-413 SAMURAI SUBGROUPE=1J13LATERAUX MOD J

N.FIG PLATE N.FIG	N.PIEZA PARTNUMBER N.PIECE	CAN QTY OUT	DENOMINACION	DESCRIPTION	DENOMINATION	OBSERVACIONES
1	63110-80000	1	CONJ PANEL INT LD	PANEL FRONT INNER RH	PANNEAU INT AV CD	
2	63510-80000	1	PANEL INT LI	PANEL FRONT INNER LH	PANNEAU IN AV CG	
3	63230-80041	1	CONJ PANEL CENTR L/D	PANEL CENTER RH	PANNEAU CENTRAL CD	
	63230-80320	1	PANEL INT CENTRAL LD	PANEL CENTER INNER R	PANNEAU INT.CENTRA C	LONG BODY
4	63630-80041	1	CONJ PANEL CENTR L/I	PANEL CENTER LH	PANNEAU CENTRAL CG	
	63630-80320	1	PANEL INT.CENTRAL LI	PANEL CENTER INNER L	PANNEAU INT.CENTRA C	LONG BODY
5	63310-80001	1	CONJ PANEL INT L/D	PANEL INNER RH	PANNEAU INT CD	
	63310A80491	1	PANEL INT.LD	PANEL INNER RH	PANNEAU INT.CD	LONG BODY
6	63710-80001	1	CONJ PANEL INT L/I	PANEL INNER LH	PANNEAU INT CG	
7	64110-80030	1	PANEL DELANT L/D	PANEL FRONT RH	PANNEAU AVANT CD	
8	64510-80030	1	PANEL DELANT L/I	PANEL FRONT LH	PANNEAU AVANT CG	
9	61490-80001	1	PANEL UMBRAL L/D	PANEL STILL INNER RH	PANNEAU INT CD	
	61490-80302	1	PANEL UMBRAL INT LD	PANEL STILL INNER RH	PANNEAU INT.CD	LONG BOSY
10	61590-80001	1	PANEL UMBRAL L/I	PANEL STILL INNER LH	PANNEAU INT CG	
	61590-80302	1	PANEL UMBRA INT.LI	PANEL STILL INNER LH	PANNEAU INT. CG	LONG BODY
11	64150-74A20	1	PANEL UMBRAL EXT.LD	PANEL STILL OUTER RH	PANNEAU EXTER.CD	LONG BODY
	64150-83000	1	PANEL UMBRAL EXT LD	PANEL STILL OUTER RH	PANNEAU EXT CD	
12	64550-74A20	1	PANEL UMBRAL EXT.LI	PANEL STILL OUTER LH	PANNEAU EXT. CG	LONG BODY
	64550-83000	1	PANEL UMBRAL EXT LI	PANEL STILL OUTER LH	PANNEAU EXT CG	
13	64200-70A00	1	PANEL TRAS LAT LD	PANEL REAR RH	PANNEAU AR CD	
	64200-74A00	1	PANEL TRAS LAT. LD	PANEL REAR SIDE RH	PANNEAU AR CD	LONG BODY
14	64240-83002	1	SOPORTE EXT LAT LD	HOLDER EXTENT RH	SUPPORT EXTENT CD	
15	89210A80011	1	BOCA LLENADO	NECK FUEL TANK	TUYAU RESERVOIR	
16	64600-83001	1	PANEL TRAS LAT LI	PANEL REAR LH	PANNEAU AR CG	
	64600-83300	1	PANEL TRAS LAT. LI	PANEL REAR SIDE LH	PANNEAU AR LA. CG	LONG BODY
17	64640-83002	1	SOPORTE EXT LAT LI	HOLDER EXTENT LH	SUPPORT EXTEN CG	
18	09250-25007	1	TAPON	PLUG	BOUCHON	
19	64235-80001	1	REFUERZO SUP CAJA LD	REINF UPPER RH BODY	RENFORT SUP BOITE CD	
20	64635-80001	1	REFUERZO SUP CAJA LI	REINF UPPER LH BODY	RENFORT SUP BOITE CG	
21	64311-80001	1	PANEL EXT TRAS L/D	PANEL REAR OUTER RH	PANNEAU AR EXTER CD	
22	64710-80001	1	PANEL EXT TRAS L/I	PANEL REAR OUTER LH	PANNEAU AR EXTER CG	
23	77131-83022A	1	EXTENSION LI AZUL	EXTENTION LH BLUE	EXTENTION CG BLEU	
	77131-83022B	1	EXTENSION LI BLANCA	EXTENTION LH WHITE	EXTENTION CG BLANC	
	77131-83022M	1	EXTENSION LI METALLI	EXTENTION LH METALLI	EXTENTION CG METALLI	
	77131-83022N	1	EXTENSION LI NEGRO	EXTENTION LH BLACK	EXTENTION CG NOIRE	
	77131-83022P	1	EXTENSION LI PLATA	EXTENTION LH SILVER	EXTENTION CG ARGENT	
	77131-83022R	1	EXTENSION LI ROJA	EXTENTION LH RED	EXTENTION CG ROUGE	
24	77141-83022A	1	EXTENSION LD AZUL	EXTENTION RH BLUE	EXTENTION CD BLEU	
	77141-83022B	1	EXTENSION LD BLANCA	EXTENTION RH WHITE	EXTENTION CD BLANC	
	77141-83022M	1	EXTENSION LD METALLI	EXTENTION RH METALLI	EXTENTION CD METALLI	
	77141-83022N	1	EXTENSION LD NEGRA	EXTENTION RH BLACK	EXTENTION CD NOIRE	
	77141-83022P	1	EXTENSION LD PLATA	EXTENTION RH SILVER	EXTENTION CD ARGENT	
	77141-83022R	1	EXTENTION LD ROJA	EXTENTION RH RED	EXTENTION CD ROUGE.	

FIG. 75.1

J - 14

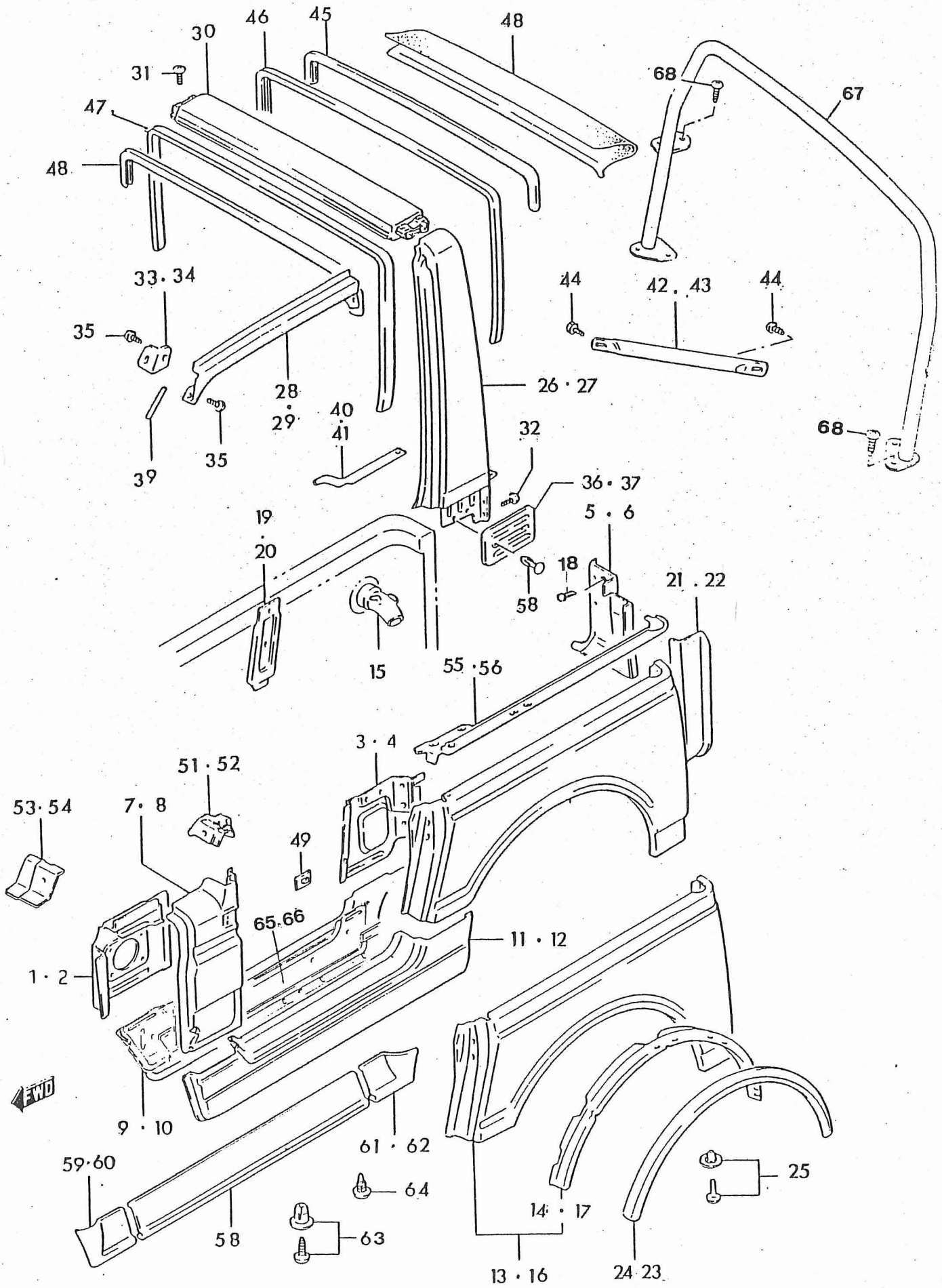
30
46
45
48
31
47
48
68
67
33 · 34
35
44
42 . 43
44
28
29
40
41
26 · 27
39
35
32
68
36 · 37
5 · 6
19
20
18
21 . 22
58
15
55 · 56
3 · 4
51 · 52
53 · 54
7 · 8
49
65.66
11 · 12
1 · 2
FWD
9 · 10
61 · 62
59 · 60
64
25
14 · 17
58
63
13 · 16
24 23

PUBLICACION N:A00523 GRUPO=CATAG SJ-413 SAMURAI SUBGRUPO=1J14CUBIERTA CENTRAL
EDICION N: 3 GROUP=CATAG S-413 SAMURAI SUBGROUP=1J14COVER CENTER
GROUPE=CATAG SJ-413 SAMURAI SUBGROUPE=1J14COUVERC.CENTRALE

N.FIG PLATE N.FIG	N.PIEZA PARTNUMBER N.PIECE	CAN QTY OUT	DENOMINACION	DESCRIPTION	DENOMINATION	OBSERVACIONES
25	09409-73012	12	CLIP	CLIP	CLIP	LONG BODY
26	65710-80301	1	EXTENSION CENTRAL LD	EXTENTION CENTER LH	EXTENSION CENT.CD	
27	65750-80301	1	EXTENSION CENTRAL LI	EXTENTION CENTER LH	EXTENSION CENT. CG	
28	65770-83011	1	PERFIL DEL TECHO LD	PROFIL ROOF FR RH	PROFILE AV TOIT CD	
29	65780-83011	1	PERFIL DEL TECHO LI	PROFIL FR ROOF LH	PROFILE AV TOIT CG	
30	65730A80012	1	EXTENSION CENTRAL	EXTENTION CENTER	EXTENSION CENTRALE	
31	09125-06060	8	TORNILLO	SCREW	VIS	
32	09125-08002	12	TORNILLO	SCREW	VIS	
33	65775-80010	1	SOPORTE DEL TECHO LD	TAY ROOF SIDE RH	SOPPORT AV TOIT CD	
34	65785-80010	1	SOPORTE DEL TECHO LI	TAY ROOF SIDE LH	SUPPORT AV TOIT CG	
35	09125-06072	10	TORNILLO	SCREW	VIS	
36	77311-80000	1	EMBELLECEDOR LD	GARNISH EXT RH	ENJOLIVEUR CD	
37	77312-80000	1	EMBELLECEDOR LI	GARNISH LH	ENJOLIVEUR CG	
38	03111-05105	4	TORNILLO	SCREW	VIS	
39	77313-80001	2	SELLANTE LAT TECHO	SEAL ROOF SIDE RAIL	SCCELLLANT LAT TOIT	
40	78621-80001	1	RELLENO EXTENS LD	PACKINK EXT RH	BOURRE EXT CD	
41	78661-80001	1	RELLENO EXTENS LI	PACKING EXTEN LH	BOURRE EXTN CG	
42	78611A80000	1	BARRA EXTENSION LD	BAR STRAIN RH	BARRE EXTEN. CD	
43	78651A80000	1	BARRA EXTENSION LI	BAR STRAIN LH	BARRE EXTENS CG	
44	09125-08002	2	TORNILLO	SCREW	VIS	
45	84640-80020	1	CUBIERTA CENTRAL	COVER CENTER REAR	COUVERC.CENTRAL	
46	84646-80000	1	TAPIC COLUMNA CENTR	TRIM COLUMNE CENT	TAPIS COLONNE CENT	
47	84640-80030	1	CUBIERTA CENTRAL	FRONT COVER CENTER	COUVERC. CENTRAL AV	
48	78681-80301	1	CUBIERTA CENTRAL	COVER CENTER OUTER	COUVERCLE CENTRALE	LONG BODY
	84641-80020	2	CUBIERTA CEN EXT.	COVER CENTER OUTER	COUVERC.CENTRAL EXT	
49	61492-80000	2	REFUERZO CINTURON	REINFORC. BELT	RENFOR CEINTURON	
50	09229A03011	2	PASADOR	PIN	CLEVETTE	
51	64120-80011	1	PANEL SUP.DEL.LD	PANEL BODY FRONT RH	PANNEAU SUP. CD	
52	64520-80011	1	PANEL SUP. DEL. LI	PANEL BODY FRONT LH	PANNEAU SUP AV CG	
53	64116-80001	1	ANGULO BISAGRA LD	GUSSET HINGE RH	PROFILE CHARNIER CD	
54	64516-80001	1	ANGULO BISAGRA LI	GUSSET HINGE LH	PROFILE CHARNIER CG	
55	64230-80002	1	GOLPEADOR LD	STRIKER RH	PROFILE CD	
	64230-83550	1	GOLPEADOR LD	STRIKER RH	PROFILE CD	LONG BODY
56	62630-83551	1	GOLPEADOR LI	STRIKER LH	PROFILE CG	LONG BODY
	64630-80002	1	GOLPEADOR LI	STRIKER LH	PROFILE CG	
58	77611-83010	2	MOLDURA LATERAL	MOLDING SIDE	MOULURE LATERALE	LONG BODY
	77611-83020	2	MOLDURA LATERAL	MOULDING SIDE	MOULERE LAT	
	77611A83030	2	MOLDURA LAT	MOULDING SIDE	MOULURE LAT	ITALIA
59	77613-83021	1	REMATE MOLD. LD	MOULDING FF RH	MOULURE LAT CD	
60	77614-83021	1	REMATE MOLD.DEL LI	MOULDING SIDE LI	MOULURE LAT CG	
61	77613-83021	1	REMATE MOLD. TRAS LI	MOULDING REAR LH	MOULURE AR CG	
62	77614-83021	1	REMATE MOLD. TRAS LD	MOULDING REAR RH	MOULURE AR CD	
63	09409-07306	8	CLIP EXTENSION	CLIP EXTENTION	CLIP EXTENTION	

FIG. 75.2

J - 15

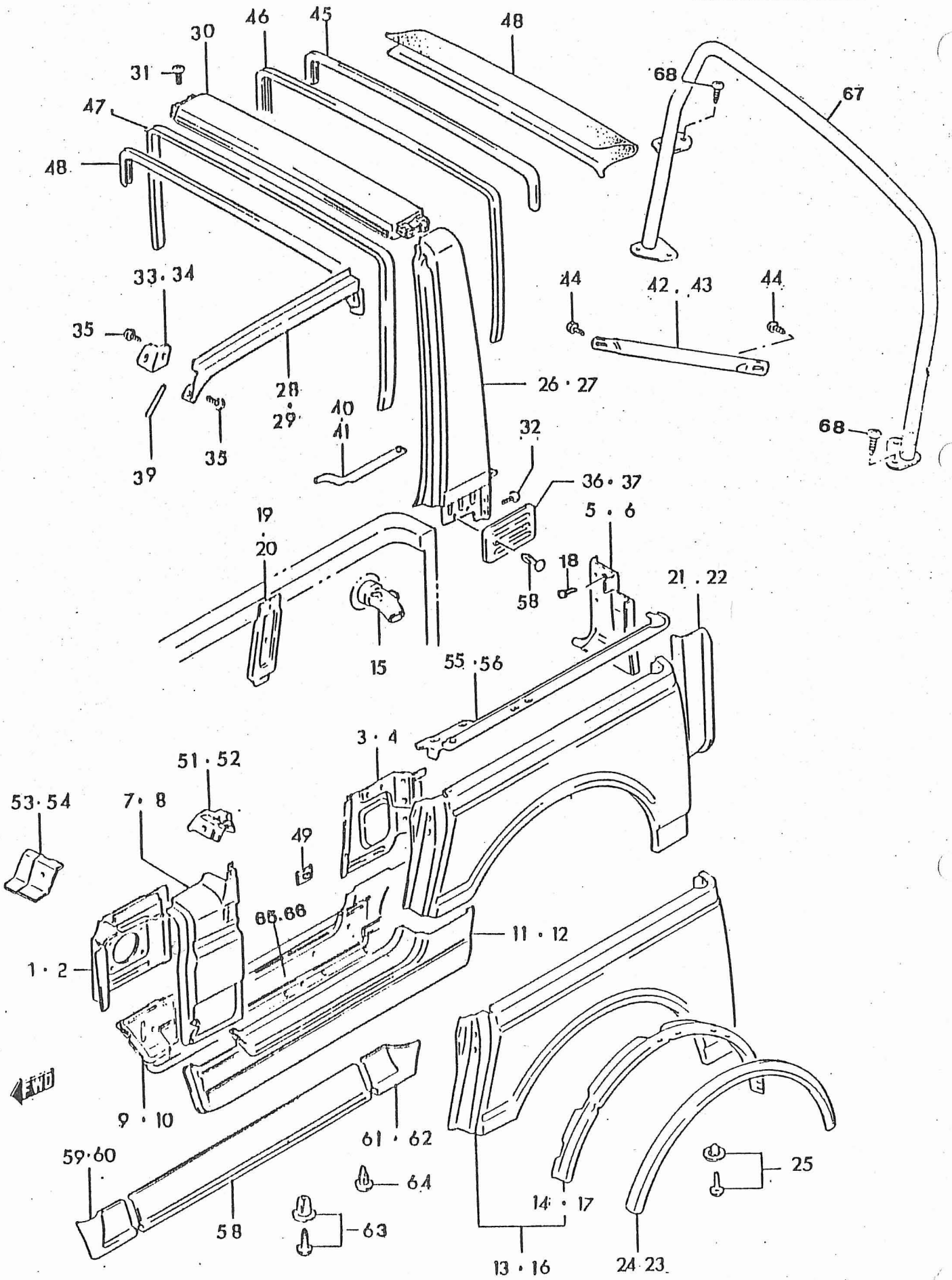

30
46
45
48
31
47
48
68
67
33 · 34
35
44
42 . 43
44
28
29
26 · 27
40
41
32
68
39
35
36 · 37
19
20
5 · 6
18
58
21 . 22
15
55 · 56
3 · 4
51 · 52
53 · 54
7 · 8
49
65.66
11 · 12
1 · 2
9 · 10
61 · 62
59 · 60
64
25
14 · 17
58
63
13 · 16
24 23

PUBLICACION N:A00523 GRUPO=CATAG SJ-413 SAMURAI SUBGRUPO=1J15ARCO TRASERO
EDICION N: 3 GROUP=CATAG S-413 SAMURAI SUBGROUP=1J15REAR PIPE
GROUPE=CATAG SJ-413 SAMURAI SUBGROUPE=1J15ARCEAU ARRIERE

N.FIG PLATE N.FIG	N.PIEZA PARTNUMBER N.PIECE	CAN QTY OUT	DENOMINACION	DESCRIPTION	DENOMINATION	OBSERVACIONES
64	09409-07310	4	CLIP	CLIP	CLIP	
65	64153-80300	1	REFUERZO PANEL LD	REINFORCEM.PANEL RH	RENFOR PANNEAU CD	LONG BODY
66	64553-80300	1	REFUERZO PANEL LI	REINFORCE.PANEL LH	RENFOR PANEAU CG	LONG BODY
67	78600-80340	1	ARCO TRASERO	REAR PIPE	ARCEAU ARRIERE	
68	09125-08002	8	TORNILLO	SCREW	VIS	

FIG. 76

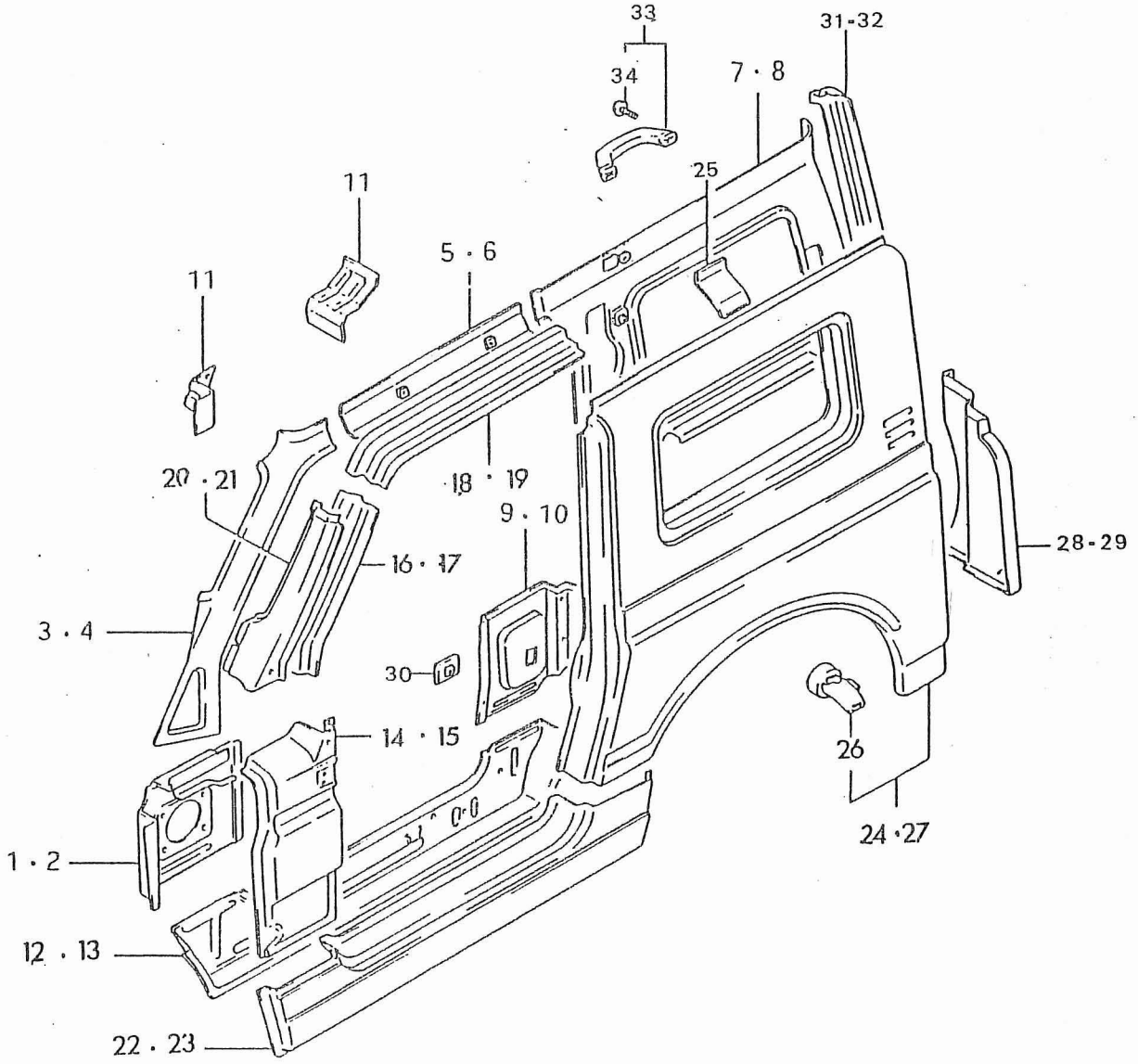
33
34
31-32
7 · 8
25
11
5 · 6
11
20 · 21
18 · 19
9 · 10
28-29
16 · 17
3 · 4
30
14 · 15
26
24 · 27
1 · 2
12 · 13
22 · 23

4WD

PUBLICACION N:A00523 GRUPO=CATAG SJ-413 SAMURAI SUBGRUPO=1J16LATERAL MOD V
EDICION N: 3 GROUP=CATAG S-413 SAMURAI SUBGROUP=1J16BODY SIDE MOD V
GROUPE=CATAG SJ-413 SAMURAI SUBGROUPE=1J16LATERAUX MOD.V

N.FIG PLATE N.FIG	N.PIEZA PARTNUMBER N.PIECE	CAN QTY OUT	DENOMINACION	DESCRIPTION	DENOMINATION	OBSERVACIONES
1	63110-80000	1	PANEL INT DEL LD	PANEL FRONT INNER RH	PANNEAU AV INT CD	
2	63510-80000	1	PANEL IN.DEL LI	PANEL FRON INNER LH	PANNEAU AV INT. CG	
3	63121-80100	1	PANEL SUP DELANT LD	PANEL FRONT UPPER RH	PANNEAU AVANT SUP CD	
4	63521-80100	1	PANEL SUP DELANT LI	PANEL FRONT UPPER LH	PANNEAU AVANT SUP CG	
5	63131-80150	1	PANEL SUP TECHO LD	PANEL ROOF SIDE RH	PANNEAU TOIT LAT CD	
6	63531-80140	1	PANEL SUPO TECHO LI	PANEL ROOF SIDE LH	PANNEAU TOIT LAT CG	
7	63210A80430	1	PANEL SUP LAT LD	PANEL UPPER SIDE RH	PANNEAU SUP LAT CD	
8	63610-80430	1	PANEL SUP LAT LI	PANEL UPPER SIDE LH	PANNEAU SUP LAT CG	
9	63231-80152	1	PANEL SUP LAT CENTRA	PANEL UPPER CENTER R	PANNEAU SUP CENT CD	
10	63631-80152	1	PANEL SUP LAR LI	PANEL UPPER CENTER L	PANNEAU SUP CENT CG	
11	63233-80001	2	SOPORTE TUBO CENTRAL	HOLDER CENTER PIPE	SUPPORT TUBE CENTRAL	
12	61490-80001	1	PANEL UMBRAL INT LD	PANEL STILL INNER RH	PANNEAU INT CD	
13	61590-80001	1	PANEL UMBRAL INT LI	OANEL STILL INNER LH	PANNEAU INT CG	
14	64110-80180	1	PANEL DELANTERO LD	PANEL FRONT RH	PANNEAU AVANT CD	
15	64510-80180	1	PANEL DELANTERO LI	PANEL FRONT LH	PANNEAU AVANT CG	
16	64131-80100	1	MARCO DEL VENTA LD	FRAMG FR WINDOW RH	CADRE FENETRE AV CD	
17	64531-80100	1	MARCO DEL VENTA LI	FRAME FR WINDOW LH	CADRE FENETRE AV CG	
18	64132-80100	1	MARCO DEL LATERAL LD	FRAME FR SIDE RH	CADRE LATERAL AV CD	
19	64532-80100	1	MARCO DEL LATERAL LI	FRAM FR WINDOW SIDE	CADRE LATERAL AV CG	
20	64141-80122	1	PANEL EXT DELANT LD	PANEL OUTER FRONT LH	PANNEAU AV EXT CG	
21	64541-80122	1	PANEL EXT DEL LI	PANEL FR OUTER LH	PANNEAU AV EXT CG	
22	64150-83000	1	PANEL UMBRA EXT LD	PANEL STILL OUTER RH	PANNEAU EXT CD	
23	64550-83000	1	PANEL UMBRAL EXT LI	PANEL STILL UOTER LH	PANNEAU EXT CG	
24	64200-71A00	1	PANEL LAT TRAS LD	PANEL REAR SIDE LH	PANNEAU AR LAT CG	
25	64216-80140	2	REFUERZO ASIDERO	REINFOC GRIP	RENFOR ANSE	
26	89210A80011	1	CODO LLENADO	NECR FUEL TANK	COUDE REMPL.	
27	64600-83100	1	PANEL TRAS LAT LI	PANEL REAR SIDE LH	PANNEAU AR LAT CG	
28	63310A80150	1	PANEL INT. LD	PANEL INNER RH	PANNEAU INTER. CD	
29	63710-80111	1	PANEL INT. LI	PANEL INNER LH	PANNEAU INTER. CG	
30	61492-80000	1	REFUERZO CINTURON	REINFORC BELT	RENFOR CEINTURON	
31	64310-80100	1	PANEL EXTE TRAS LD	PANEL REAR OUTER RH	PANNEAU EXT AR CD	
32	64710-80100	1	PANEL EXT TRAS LI	PANEL REAR OUTER LH	PANNEAU EXT AR CG	
33	51439-00000	3	ASIDERO GRIS	GRIP GRAY	ANSE GRIS	
	51440-00000	3	ASIDERO MARRON	GRIP BRAOW	ANSE GRIS	
	86211-79000	3	ASIDERO TECHO	GRIP SET	ANSE TOIT	
34	09125-06041	6	TORNILLO	SCREW	VIS	

FIG.77

K- 11

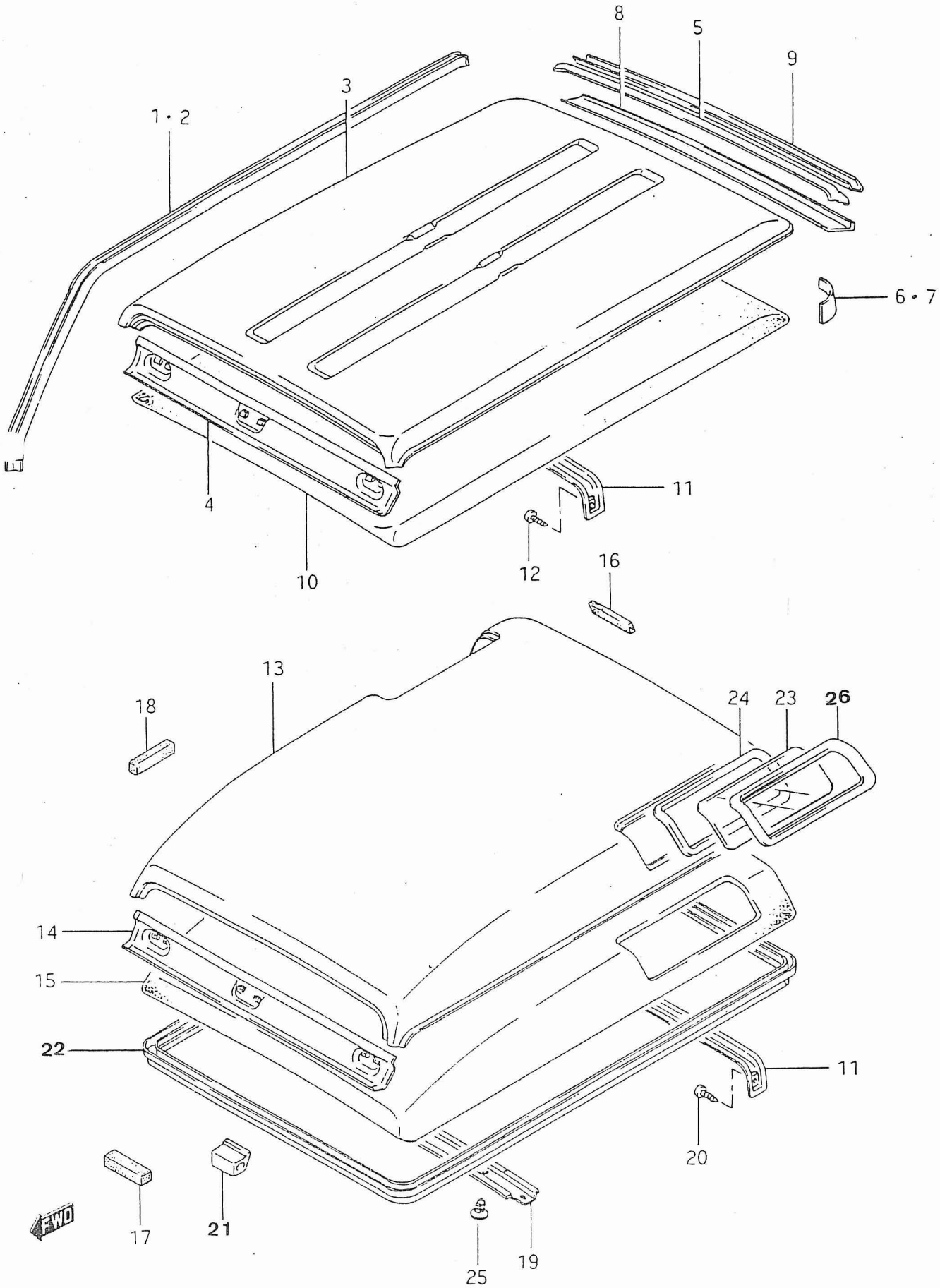

PUBLICACION N:A00523 GRUPO=CATAG SJ-413 SAMURAI SUBGRUPO=1K11TECHO METALICO
EDICION N: 3 GROUP=CATAG S-413 SAMURAI SUBGROUP=1K11ROOF PANEL MOD V
GROUPE=CATAG SJ-413 SAMURAI SUBGROUPE=1K11TOIT METAL MOD:V

N.FIG PLATE N.FIG	N.PIEZA PARTNUMBER N.PIECE	CAN QTY OUT	DENOMINACION	DESCRIPTION	DENOMINATION	OBSERVACIONES
1	64351-80101	1	PERFIL TECHO LD	RAIL ROOF RH	PROFILE CD	
2	64751-80101	1	PERFIL TECHO LI	RAIL ROOF DRIP LH	PROFILE TOIT CG	
3	65111-80103	1	PANEL TECHO	PANEL ROOF	PANNEAU TOIT	
4	65120-80101	1	PANEL INTERIOR TECHO	PANEL ROOF FRONT INN	PANNEAU TOIT AV INT	
5	65130-80100	1	MARCO EXT TRAS TECHO	FRAME BACK OUTER	CHASSIS EXT TOIT	
6	65134-80100	1	REFUERZO LD	REINDORCEMENT RH	RENFORT CD	
7	65135-80100	1	REFUERZO LI	REINDORCEMENT LH	RENFORT CG	
8	65141-80110	1	MARCO INTERIOR	FRAME BACK INNER	CHASSIS INTERIEUR	
9	65241-80101	1	PERFIL TRAS TECHO	RAIL ROOF DRIP REAR	PROFILE AR TOIT	
10	78111-80101	1	FORRO PANEL TECHO	HEAD LINING ROOF	GARNITURE PANNEAU	
11	78141-80102	1	REFUERZO TECHO	REINFORCEMENT ROOF	RENFORT TOIT	
12	02142-06125	2	TORNILLO	SCREW	VIS	
13	65110-83600	1	PANEL TECHO ALTO	PENEL HIGH ROOF	PANNEAU TOIT HAUTE	
14	65120-83101	1	PANEL INT TECHO DEL	PANEL INNER ROOF FR	PANNEAU INT TOIT AV	
15	78111-83601-4KW	1	FORRO PANEL TECHO	LINING ROOF PANEL	GUARNITURE TOIT	
16	78131-83100	4	ALMOHADILLA TRASERA	REAR CUSHION	CAOUTCHOUC AR TOIT	
17	78132-83101	3	ALMOHADILLA DELANTER	FRONT CUSHION	CAOUTCHOUC AV TOIT	
18	78133-83100	2	ALMOHADILLA LATERAL	SIDE CUSHION	CAOUTCHOUC LATERALE	
19	78141-83101	2	REFUERZO PANEL TECHO	ROOF REINFORCEMENT	RENFORT TOIT	
20	02142-06126	4	TORNILLO	SCREW	VIS	
21	78142A80100	1	TOPE	CUSHION FRONT	BUTEE AV	
22	78121-83002-4GF	1	JUNTA TECHO	ROOF SEALING	JOINT TOIT	
23	78211-83600	2	CRISTAL VENTANA	GLASS WINDOW	VITRE	
24	78221-83601	2	JUNTA VENTANA	SEALING WINDOW	JOINT FENETRE	
25	09409-06309	6	CLIP	CLIP	CLIP	
26	78230-83601	2	MOLDURA VENTANA	MOULDING WINDOW	MOULURE FENETRE	

FIG.78

K - 05

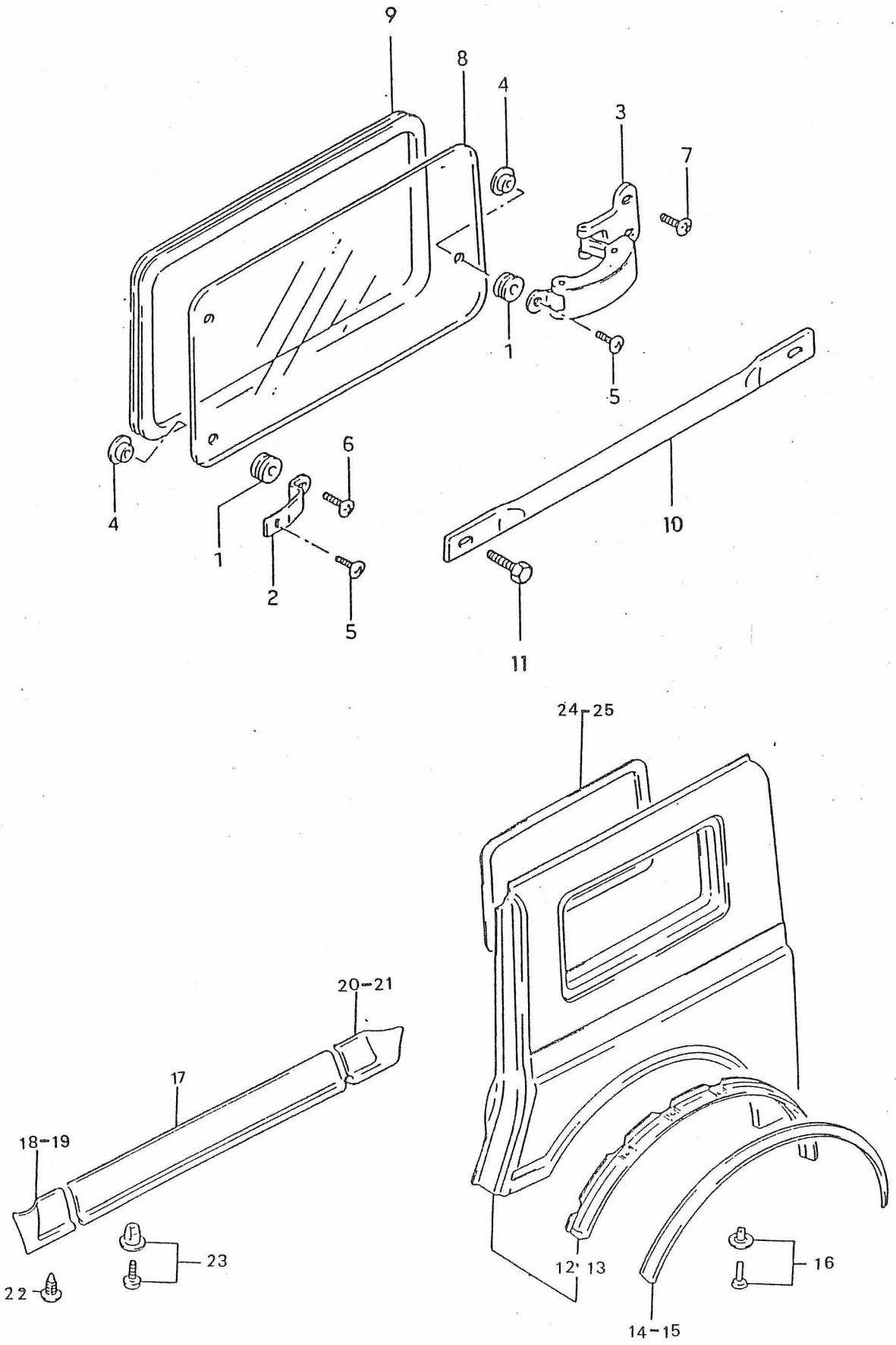

PUBLICACION N:A00523 GRUPO=CATAG SJ-413 SAMURAI SUBGRUPO=1K05VENTANA LATERAL
EDICION N: 3 GROUP=CATAG S-413 SAMURAI SUBGROUP=1K05SIDE WINDOW
GROUPE=CATAG SJ-413 SAMURAI SUBGROUPE=1K05FENETRE LATERALE

N.FIG PLATE N.FIG	N.PIEZA PARTNUMBER N.PIECE	CAN QTY OUT	DENOMINACION	DESCRIPTION	DENOMINATION	OBSERVACIONES
1	69275-78200	6	CASQUILLO GOMA	PAD WINDOW	BAGUE CAOUTCHOUC	
(*) 2	81411-80100	4	BISAGRA	HINGE WINDON	CHARNIERE	
3	81430-80102	2	CIERRE VENTANA	LOCK	FERMETURE	
4	81451-80101	6	TAPON VENTANA	COVER WINDOW	BOUCHON FENETRE	
5	02142-05085	6	TORNILLO	SCREW	VIS	
6	02142-05065	4	TORNILLO	SCREW	VIS	
7	02142-05168	4	TORNILLO	SCREW	VIS	
8	84561-80112	2	CRISTAL LAT VENTANA	GLASS SIDE WINDOW	GLACE LAT FENETRE	
9	84621A80101	2	TIRA SELLANTE	WEATHESTRIP	PROFILE	
10	81111-83000	2	BARRA PROTEC	BAR WINDOW GUARD	BARRE PROTEC	
11	09125-08002	2	TORNILLO	SCREW	VIS	
12	64240-83002	1	SOPORTE EXT LD	HOLDER EXT RH	SUPPORTE EXT CD	
13	64640-83002	1	SOPORTE EXT. LI	HOLDER EXT LH	SUPPORT EXT CG	
14	77131-83022A	1	EXTENSION LI AZUL	EXTENTION LH BLUE	EXTENTION CG BLEU	
	77131-83022B	1	EXTENSION LI BLANCO	EXTENTION LH WHITE	EXTENTION CG BLANC	
	77131-83022M	1	EXTENSION LI METALIC	EXTENTION LH METALLI	EXTENTION CG METALLI	
	77131-83022N	1	EXTENSION LI NEGRA	EXTENTION LH BLACK	EXTENTION CG NOIRE	
	77131-83022P	1	EXTENSION LI PLATA	EXTENTION LH SILVER	EXTENTION CG ARGENT	
	77131-83022R	1	EXTENSION LI ROJA.	EXTENTION LH RED	EXTENTION CG ROUGE	
15	77141-83022A	1	EXTENTION LD AZUL	EXTENTION RH BLUE	EXTENTION CD BLEU	
	77141-83022B	1	EXTENSION LD BLANCA	EXTENTION RH WHITE	EXTENTION CD BLANC	
	77141-83022M	1	EXTENTION LD METALLI	EXTENTION RH METALLI	EXTENTION CD METALLI	
	77141-83022N	1	EXTENSION LD NEGRO	EXTENTION RH BLACK	EXTENTION CD NOIRE	
	77141-83022P	1	EXTENSION LD PLATA	EXTENTION RH SILVER	EXTENTION CD ARGENT	
	77141-83022R	1	EXTENSION LD ROJA	EXTENTION RH RED	EXTENTION CD ROUGE	
16	09409-07312	14	CLIP	CLIP	CLIP	
17	77611-83020	2	MOLDURA LATERAL	MOULDING SIDE	MOULERE AV	
18	77613-83021	1	REMATE MOLD DEL LD	CORNER MOLUD FR RH	MOULURE AV CD	
19	77614-83021	1	REMETE MOLD.DEL LI	CORNER MOULD.FR LH	MOULURE AR CG	
20	77613-83021	1	REMATE MOLD TRA LD	CORNER MOULD RR RH	MOULURE AR CD	
21	77614-83021	1	REMATE MOLD TRAS LI	CORNER MOLD. RR LH	MOULURE AR CG	
22	09409-07310	4	CLIP	CLIP	CLIP	
23	09409-07312	8	CLIP	CLIP	CLIP	
24	64217-80130	1	TAPA VENTANA LD	COVER SIDE RH	COUVERC.LAT CD	
25	64617-80130	1	TAPA VENTANA LI	COVER SIDE LH	COUVERC. LAT CG	

(*) POS 2, CON FECHA 20/2/2006, SE HACE BOLETIN DE SERVICIO SJ-001106
USE MULTIPLE: 81411-80100 → 81411-80101 Y ADEMAS 81411-80100

FIG. 79

L-02

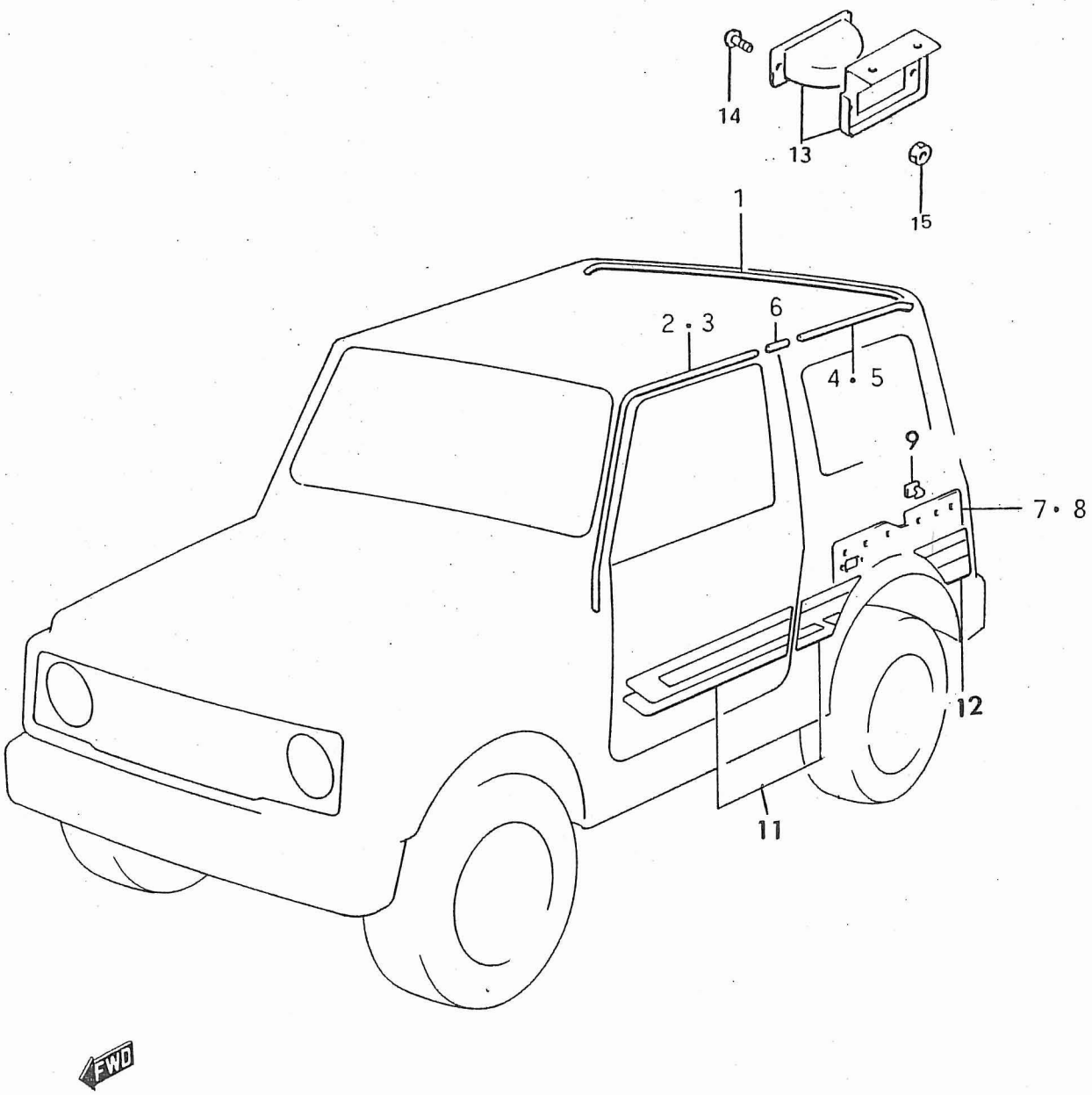

PUBLICACION N:A00523 GRUPO=CATAG SJ-413 SAMURAI SUBGRUPO=1L02MOLDURA TECHO
EDICION N: 3 GROUP=CATAG S-413 SAMURAI SUBGROUP=1L02MOULDING ROOF
GROUPE=CATAG SJ-413 SAMURAI SUBGROUPE=1L02MOULURE TOIT

N.FIG PLATE N.FIG	N.PIEZA PARTNUMBER N.PIECE	CAN QTY OUT	DENOMINACION	DESCRIPTION	DENOMINATION	OBSERVACIONES
1	77511-80160	1	MOLDURA TRAS TECHO	MOLUDING ROOF REAR	MOULURE TOIT AR	
2	77512-80160	1	MOLDURA TECHO LD	MOULDING ROOF RH	MOULURE TOIT CD	
3	77513-80160	1	MOLDURA TECHO LI	MOULDING ROOF LH	MOULURE TOIT CG	
4	77514-80160	1	MOLDURA LAT LD	MOULDING SIDE RH	MOULURE LAT CD	
5	77515-80160	1	MOLDURA LAR LI	MOULDING SIDE LH	MOULURE LAT CG	
6	77516-80160	1	JUNTA MOLDURA	GASKET MOULDING	JOINT MOULURE	
7	76110A83000	1	TAPIC LD MOD.J MARR.	MATT RH MOD.J BROWN	TAPIS CD MOD.J MARRON	
	76110-83020	1	TAPIC LD GRIS MOD.J	MATT RH GRAY MOD.J	TAPIS CD GRIS MOD.J	LONG BODY
	76110A71A00	1	TAPIC LD GRIS MOD.V	MATT RH GRAY MOD.V	TAPIS CD GRIS MOD.V	VINILO GRIS
	76110A71A10	1	TAPIC.LD MOD.V	MATT RH MOD.V	TAPIS CD MOD.V	VINILO MARRON
	76110A83020	1	TAPIC TRAS.LD MARRON	REAR TRIM RH BROWN	TAPIS AR CD MARRON	LONG BODY
	76110B71A00	1	TAPIC LD MOD V T/G	TRIM RH MOD V C/G	TAPIC CD MOD V T/G	TELA GRIS
	76110B71A10	1	TAPIC LD MOD.V	MATT RH MOD.V.	TAPIS CD MOD.V	TELA MARRON
	76110B83020	1	TAPIC. LD VINILO GRI	TRIM RH VINILE GRAY	TAPIS CD VINILO GRIS	LONG BODY
	76110C71A10	1	TAPIC LD MOD.V	MATT RH MOD.V	TAPIS.CD MOD.V	U.K.VINILO GRIS
	76110C83020	1	TAPIC LD VINILO MARR	TRIM RH VINILE BROWN	TAPIS CD VINILO MARR	LONG BODY
	76110D71A10	1	TAPIC.LD MOD.V	MATT RH MOD.V.	TAPIS.CD MOD.V.	U.K. TELA GRIS
	76110E71A10	1	TAPIC LD MOD.V.	MATT RH MOD.V	TAPIS CD MODO.V	U.K.VINILO MARR
	76110F71A10	1	TAPIC LD MOD.V	MATT RH MOD.V	TAPIS CD MOD.V	U.K.TELA MARRON
8	76120A83000	1	TAPIC.LI MOD. J.MARR.	MATT LH MOD.J BROWN	TAPIS CG MOD. JMARRON	
	76120-83020	1	TAPIC LI GRIS MOD.J	MATT LH GRAY MOD.J	TAPIS CG GRIS MOD.J	LONG BODY
	76120A71A00	1	TAPIC LI GRIS MOD.V	MATT LH GRAY MOD.V	TAPIS CG GRIS MOD.V	
	76120A71A10	1	TAPIC.LI MOD.V	MATT LH MOD.V	TAPIS.CG MOD. V	VINILO MARRON
	76120A83020	1	TAPIC TRAS LI MARRON	TRIM REAR LH BROWN	TAPIS AR CG MARRON	LONG BODY
	76120B71A00	1	TAPIC LH MOD V T/G	TRIM LH MOD V C/G	TAPIC CG MDO V T/G	TELA GRIS
	76120B71A10	1	TAPIC LI MOD V T/M	TRIM LH MOD V C/B	TAPIS CG MOD V T/M	TELA MARRON
	76120B83020	1	TAPIC LI VINILO GRIS	TRIM LH VINILE GRAY	TAPIS CG VINILO GRIS	LONG BODY
	76120C71A10	1	TAPIC LI MOD.V	MATT LH MOD.V	TAPIS CG MOD.V	U.K.VINILO GRIS
	76120C83020	1	TAPIC LI VINILO MARR	TRIM LH VINILE BROWN	TAPIS CG VINILO MARR	LONG BODY
	76120D71A10	1	TAPIC LI MOD.V.	MATT LH MOD.V	TAPIS CG MOD.V.	U.K.TELA GRIS
	76120E71A10	1	TAPIC LI MOD.V.	MATT LH MOD.V	TAPIS CG MOD.V.	U.K.VINILO MARR
	76120F71A10	1	TAPIC LI MOD.V.	MATT LH MOD,V	TAPIS CG MOD.V	U.K.TELA MARRON
9	09409A08303	13	CLIP TAPICERIA	CLIP TRIM	CLIP TAPIISERIE	
	09409A10303	3	CLIP GRIS	CLIP GRAY	CLIP GRIS	LONG BODY
	09409B10303	3	CLIP MARRON	CLIP BROWN	CLIP MARRON	LONG BODY
	09409B12301	9	CLIP GRIS	CLIP GRAY	CLIP GRIS	

FIG. 79.1

L-03

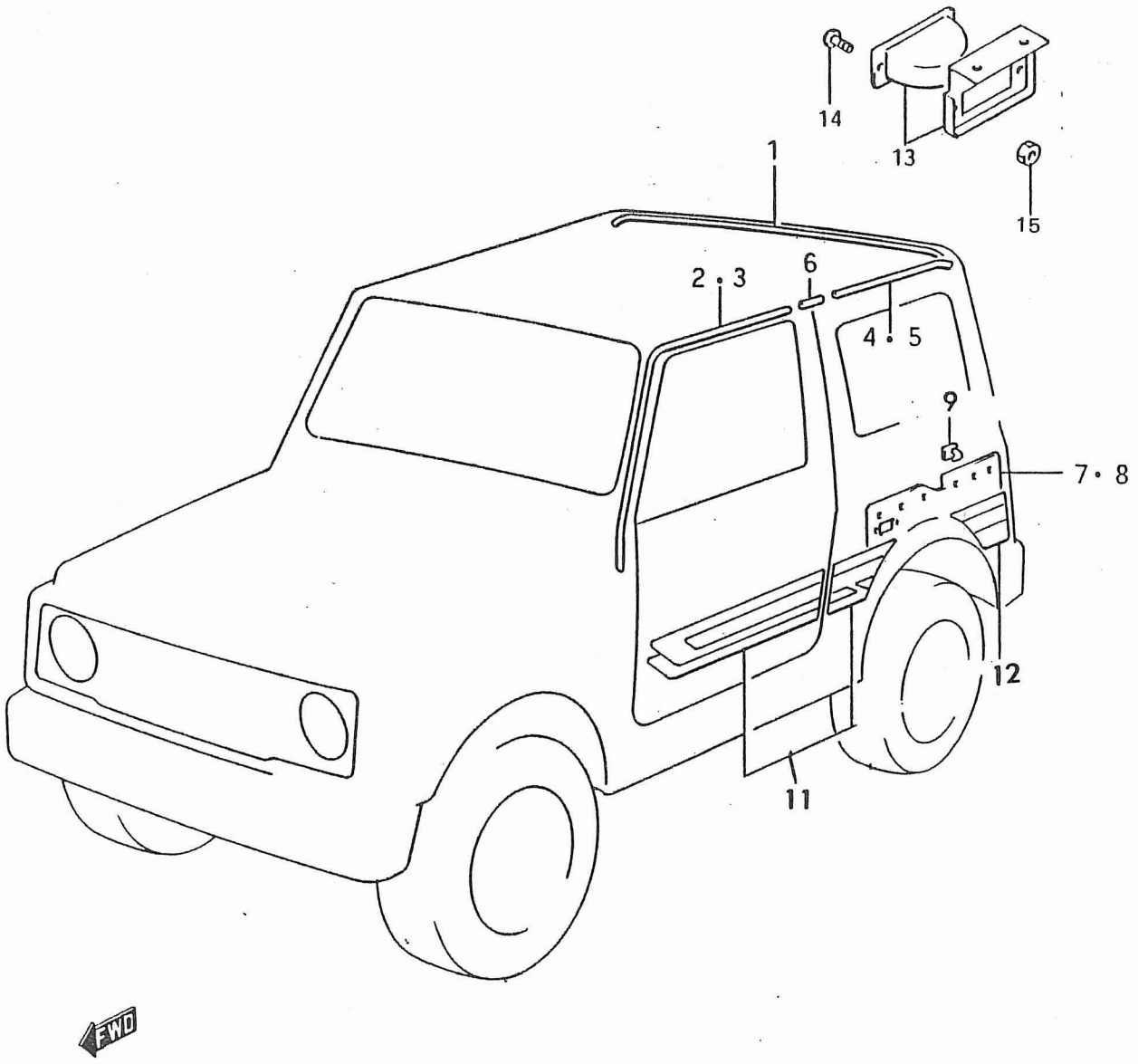

PUBLICACION N:A00523 GRUPO=CATAG SJ-413 SAMURAI SUBGRUPO=1L03BANDAS DECORAT.
EDICION N: 3 GROUP=CATAG S-413 SAMURAI SUBGROUP=1L03STRIPER
GROUPE=CATAG SJ-413 SAMURAI SUBGROUPE=1L03BANDES

N.FIG PLATE N.FIG	N.PIEZA PARTNUMBER N.PIECE	CAN QTY OUT	DENOMINACION	DESCRIPTION	DENOMINATION	OBSERVACIONES
10	77640E70A00	1	BANDA LD GRIS OSCURO	STRIPE RH GRAY	BANDE CD GRIS	
11	00000A00565	1	JUEGO BANDAS AZUL	SET STRIPE BLUE-GRAY	JEU BANDES BLEU GRIS	
	00000A00566	1	JGO.BANDA ROJO-GRIS	SET STRIPE RED-GRAY	JEU BANDES ROUGE GRI	
	00000A00567	1	JGO.BANDA GRIS OSCUR	SET STRIPE GRAY	JEU BANDES GRIS	
	00000A00680	1	JUEGO BANDAS GRISES	SET STRIPE GRAY	JUE BANDES GRIS	LONG BODY
	00000A00681	1	JUEGO BANDA AZULES	SET STRIPE BLUE	JUE BANDE BLEU	LONG BODY
	77640A70A00	1	BANDA LD AZUL GRIS	STRIP RH BLUE GRAY	BANDE CD BLEU GRIS	
	77640A74A00	1	BANDA LLD AZUL GRIS	STRIPE RH BLUE GRAY	BANDE CD BLEU GRIS	LONG BODY
	77640C70A00	1	BANDA LD ROJO GRIS	STRIPE RH RED-GRAY	BANDE CD ROUGE GRIS	
	77640C74A00	1	BANDA LD GRIS-OSCURO	STRIPE RH GRAY	BANDE CD GRIS	LONG BODY
	77650A70A00	1	BANDA LI AZUL GRIS	STRIPE LH BLUE GRAY	BANDE CG BLEU GRIS	
	77650A74A00	1	BANDA LI AZUL GRIS	STRIPE LH BLUE GRAY	BANDE CG BLEU GRAY	LONG BODY
	77650C70A00	1	BANDA LI ROJO GRIS	STRIPE LH RED-GRAY	BANDE CG ROUGE GRIS	
	77650C74A00	1	BANDA LI GRIS.	STRIPE LH GRAY	BANDE CG GRIS	LONG BODY
	77650E70A00	1	BANDA LI GRIS OSCURO	STRIPE LH GRAY	BANDE CG GRIS	
12	77640B70A00	1	BANDA LD AZUL GRIS	STRIPE RH BLUE GRAY	BANDE CD BLEU GRIS	
	77640B74A00	1	BANDA TRAS LD AZUL	STRIPE RR RH BLUE	BANDE AR CD BLEU	LONG BODY
	77640D70A00	1	BANDA LD ROJO GRIS	STRIPE RH RED GRAY	BANDE CD ROUGE GRIS	
	77640D74A00	1	BANDA TRAS LD GRIS	STRIPE RR RH GRAY	BANDE AR CD GRIS	LONG BODY
	77640F70A00	1	BANDA LD GRIS OSCURO	STRIPE RH GRAY	BANDE CD GRIS	
	77650B70A00	1	BANDA LI AZUL GRIS	STRIPE LH BLUE GRAY	BANDE CG BLEU GRIS	
	77650B74A00	1	BANDA TRAS LI AZUL	STRIPE REAR LH BLUE	BANDE AR CG BLEU	LONG BODY
	77650D70A00	1	BANDA LI ROJO GRIS	STRIPE LH RED GRAY	BANDE CG ROUGE GRIS	
	77650D74A00	1	BANDA TRAS LI GRIS	STRIPE REAR LH GRAY	BANDE AR CG GRIS	LONG BODY
	77650F70A00	1	BANDA LI GRIS	STRIPE LH GRAY	BANDE CG GRIS	
13	86370-58140	2	CENICERO TRAS.	REAR ASTRHAY	CENDRIERE AR	U.K.
14	02122-04168	4	TORNILLO	SCREW	VIS	U.K.
15	08316A16046	4	TUERCA	NUT	ECROU	U.K.

FIG.80

K- 02

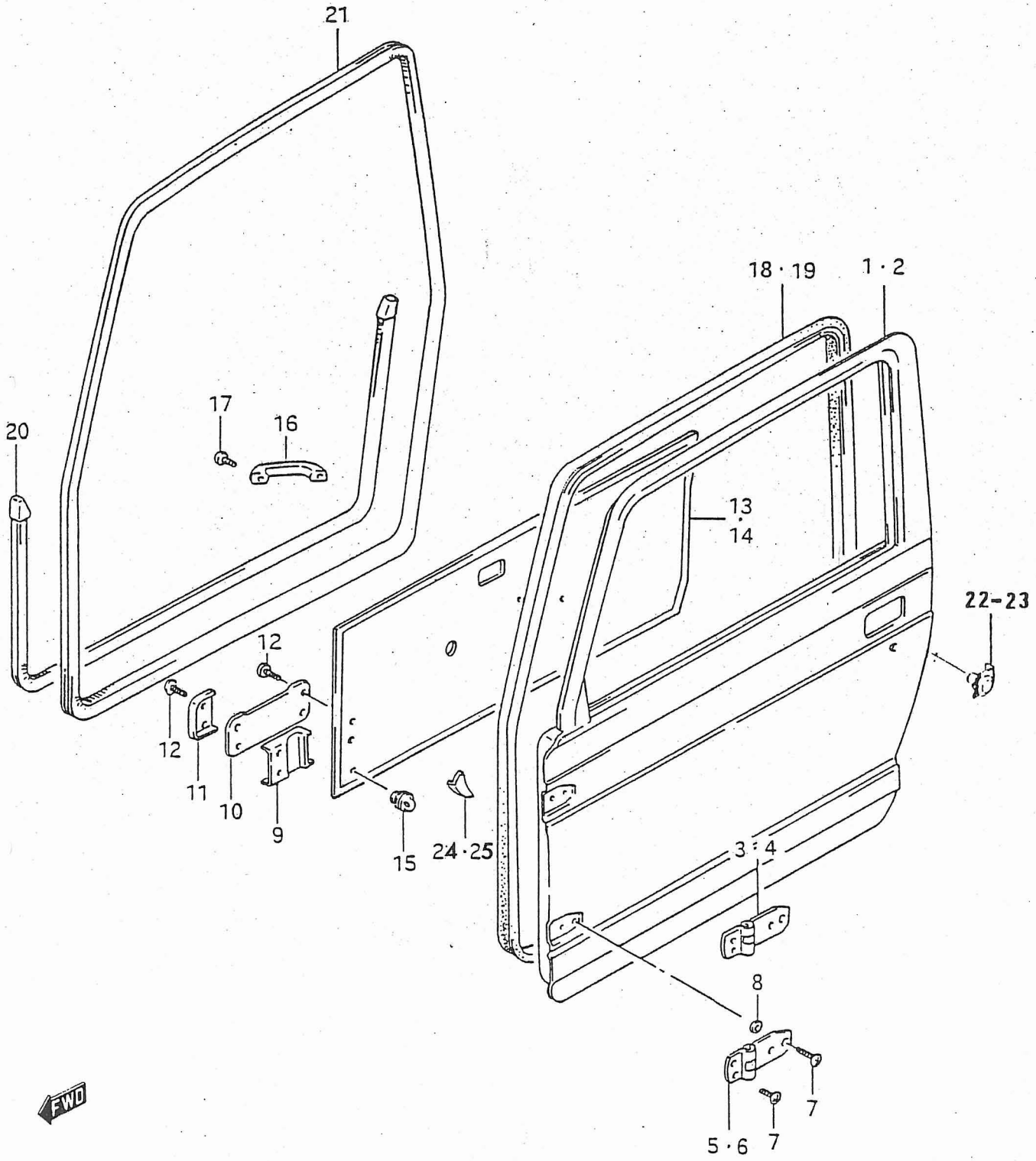

PUBLICACION N:A00523 GRUPO=CATAG SJ-413 SAMURAI SUBGRUPO=1K02PUERTA DELANTERA
EDICION N: 3 GROUP=CATAG S-413 SAMURAI SUBGROUP=1K02DOOR FRONT
GROUPE=CATAG SJ-413 SAMURAI SUBGROUPE=1K02PORTE AVANT

N.FIG PLATE N.FIG	N.PIEZA PARTNUMBER N.PIECE	CAN QTY OUT	DENOMINACION	DESCRIPTION	DENOMINATION	OBSERVACIONES
1	68001-80123	1	PUERTA DEL L/D	DOOR ASSY RH	ENS PORTE CD	
2	68002-80123	1	PUERTA DEL L/I	DOOR ASSY LH	ENS PORTE CG	
3	69310-80110	1	BISAGRA SUP PTA L/D	HINGE DOOR UPPER RH	CHARNIERE PORTE CD	
4	69340-80110	1	BISAGRA SUP PTA L/I	HINGE DOOR UPPER LH	CHARNIERE PORTE CG	
5	69320-80110	1	BISAGRA INF PTA L/D	HINGE DOOR LOWER RH	CHARNIERE INF CD	
6	69350-80110	1	BISAGRA INF PTA L/I	HINGE DOOR LOWER LH	CHARNIERE INF CG	
7	09125-08002	16	TORNILLO	SCREW	VIS	
8	09160-08086	8	ARANDELA	WASHER	RONDELLE	
9	76182-63101	2	REMATE CORREA	PROTECTOR TRIM	CHAPEAU RETENTION	
10	81811A80100	2	CORREA RET PUERTA	BAND OPEN STOPPER	COURROIE RET PORTE	
11	76182-58002	4	REMATE CORRER	PROTECTOR TRIM	CHAPEAU RETENT	
12	02132-05205	8	TORNILLO	SREW	VIS	
13	51160-00000	1	TAPIC VINILO LI	TRIM VINILE LH	TAPIS VINILE CG	HUELLA GRIS
	51192-00000	1	TAPIC VINILO LD	TRIM VINILE RH	TAPIS VINILO CD	HUELLA MARRON
	83710-70A00	1	TAPICERIA GRIS LD	TRIM RH GRAY	TAPIS GRIS CD	
	83710A70A00	1	TAPIC LD T/MARRON	TRIM RH CLOTH BROWN	TAPIC LH T/M	
14	51161-00000	1	TAPIC VINILO LI	TRIM VINILE LH	TAPIS VINILE CG	HUELLA GRIS
	51194-00000	1	TAPIC LI VINILO	TRIM LH PVC	TAPIS CG VINILE	HUELLA MARRON
	83720-70A00	1	TAPICERIA LI GRIS	TRIM LH CLOTH GRAY	TAPISS GRIS CG	
	83720A70A00	1	TAPIC LI TELA MARRON	TRIM LH CLOTH BROWN	TAPIC CG TELA MARRON	
15	09409-08305	20	CLIP	CLIP	CLIP	
16	78271A58053	2	ASIDERO PTA GRIS	HANDLE DOOR GRAY	ANSE PORTE GRIS	
	78271B58053	2	ASIDERO PTA MARRON	HANDLE DOOR BROWN	ANSE PORTE MARRON	
17	09125-06041	4	TORNILLO	SCREW	VIS	
18	84641-80121	1	TIRA SELLANTE L/D	SEALING STRIP RH	BANDE FENETRE D	
19	84651-80121	1	TIRA SELLANTE LI	SEALING STRIP LH	BANDE FENETRE G	
20	84630-80000	2	JUNTA PTA MOD-J	TRIM DOOR MOD-J	TAPISSERE MOD-J	
21	84645A80101	2	JUNTA PTA MOD-V	TRIM DOOR MOD-V	TAPISSERE MOD-V	
22	82270A80100	1	CERRADURA L/D	BARREL KEY RH	BARRILLET ET CLE CD	
23	82280A80100	1	CERRADURA L/I	BARREL KEY LH	BARRILLET ET CLE CG	
24	84642-80120	1	TIRA SELLANTE L/D	PAD RH	SCELLEUR PORTE D	
25	84652-80120	1	TIRA SELLENTE L/I	PAD LH	SCELLEUR PORTE G	

FIG. 81

K - 03

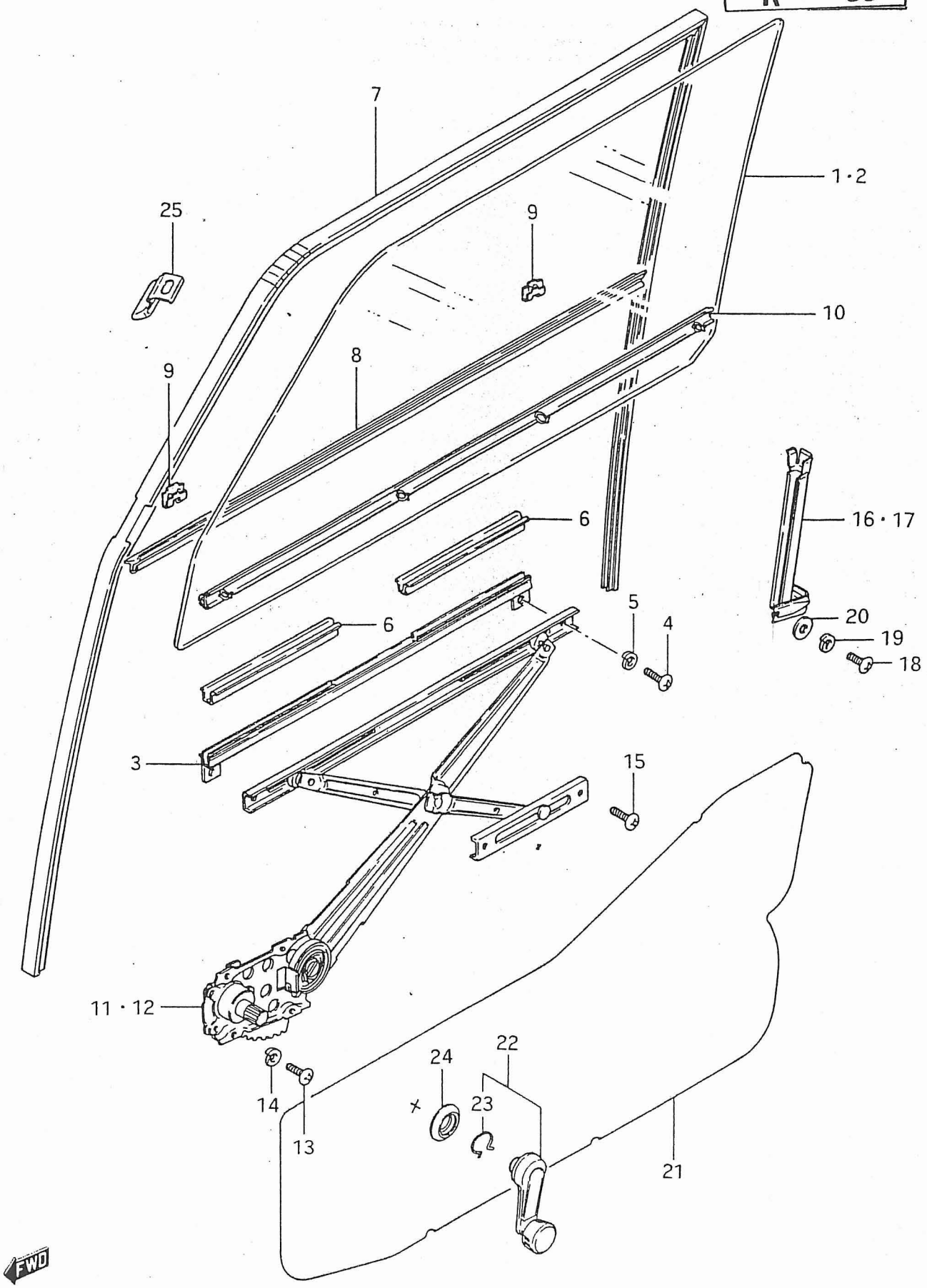

PUBLICACION N:A00523 GRUPO=CATAG SJ-413 SAMURAI SUBGRUPO=1K03CRISTAL PTA DEL
EDICION N: 3 GROUP=CATAG S-413 SAMURAI SUBGROUP=1K03FRONT DOOR GLASS
GROUPE=CATAG SJ-413 SAMURAI SUBGROUPE=1K03VITRE-LEVE PORTE

N.FIG PLATE N.FIG	N.PIEZA PARTNUMBER N.PIECE	CAN QTY OUT	DENOMINACION	DESCRIPTION	DENOMINATION	OBSERVACIONES
1	84531-80112	1	CRISTAL PTA L/D	GLASS DOOR RH	GLACE PORTE CD	
2	84536-80112	1	CRISTAL PTA L/I	GLASS DOOR LH	GLACE PORTE CG	
3	78710-78000	2	PERFIL INT CRISTAL	CHANNEL GLASS	PROFILE GLACE	
4	02112-06086	4	TORNILLO	SCREW	VIS	
5	08321A31066	4	ARANDELA	WASHER	RONDELLE	
6	78811A78400	4	PERFIL GOMA INF	RUBBER PROFIL LOWER	PROFILE CAOUTCHOUC	
7	83661A80101	2	GUIA CRISTAL	GLASS GUIDE	GUIDE GLACE	
8	83811-80100	2	TIRA EXT PUERTA	SEALING OUTSIDE	BANDE EXT AV PORTE	
9	78991-78000	12	CLIP	CLIP	CLIP	
10	83850-80100	2	TIRA INT PTA	SEALING INSIDE	BANDE INT PORTE	
11	83440-80100	1	BRAZO LI	MECHASNIS LH	MECANISME CG	
12	83410-80100	1	BRAZO LD	MECHANIS RH	MECANISME CD	
13	02112-06086	8	TORNILLO	SCREW	VIS	
14	08321A31066	8	ARANDELA	WASHER	RONDELLE	
15	02142-06108	4	TORNILLO	SCREW	VIS	
16	81730-80101	1	GUIA POST PTA L/D	SASH DOOR REAR RH	GUIDE PORTE AR CD	
17	81740-80101	1	GUIA POST PTA L/I	SASH DOOR REAR LH	GUIDE PORTE AR CG	
18	02112-06128	2	TORNILLO	SCREW	VIS	
19	08321A31068	2	ARANDELA	WASHER	RONDELLE	
20	08322-21068	2	ARANDELA	WASHER	RONDELLE	
21	83911-80100	2	CUBIERTA PTA	COVER FRONT DOOR	COUVERCLE PORTE AV	
22	82960A82100	2	PALANCA GRIS	HANDLE REG GRAY	LEVIER REG GRIS	
	82960B82100	2	PALANCA MARRON	HADNLE REG BROWN	LEVIER MARRON	
23	78463-78000	2	CIRCLIP	SNAP RING	CIRCLIP	
24	78472A78000	2	EMBELLECEDOR GRIS	ESCUTCHEON GRAY	ENVIJOLIVEUR GRIS	
	78472B78000	2	EMBELLEC MARRON	ESCUTVHEON BROWN	ENJOLIVEUR MARRON	
25	78861-78400	2	GUIA CRISTAL PTA	GLASS DOOR GUIDE	GUIDE GLACE	

FIG.82

K- 04

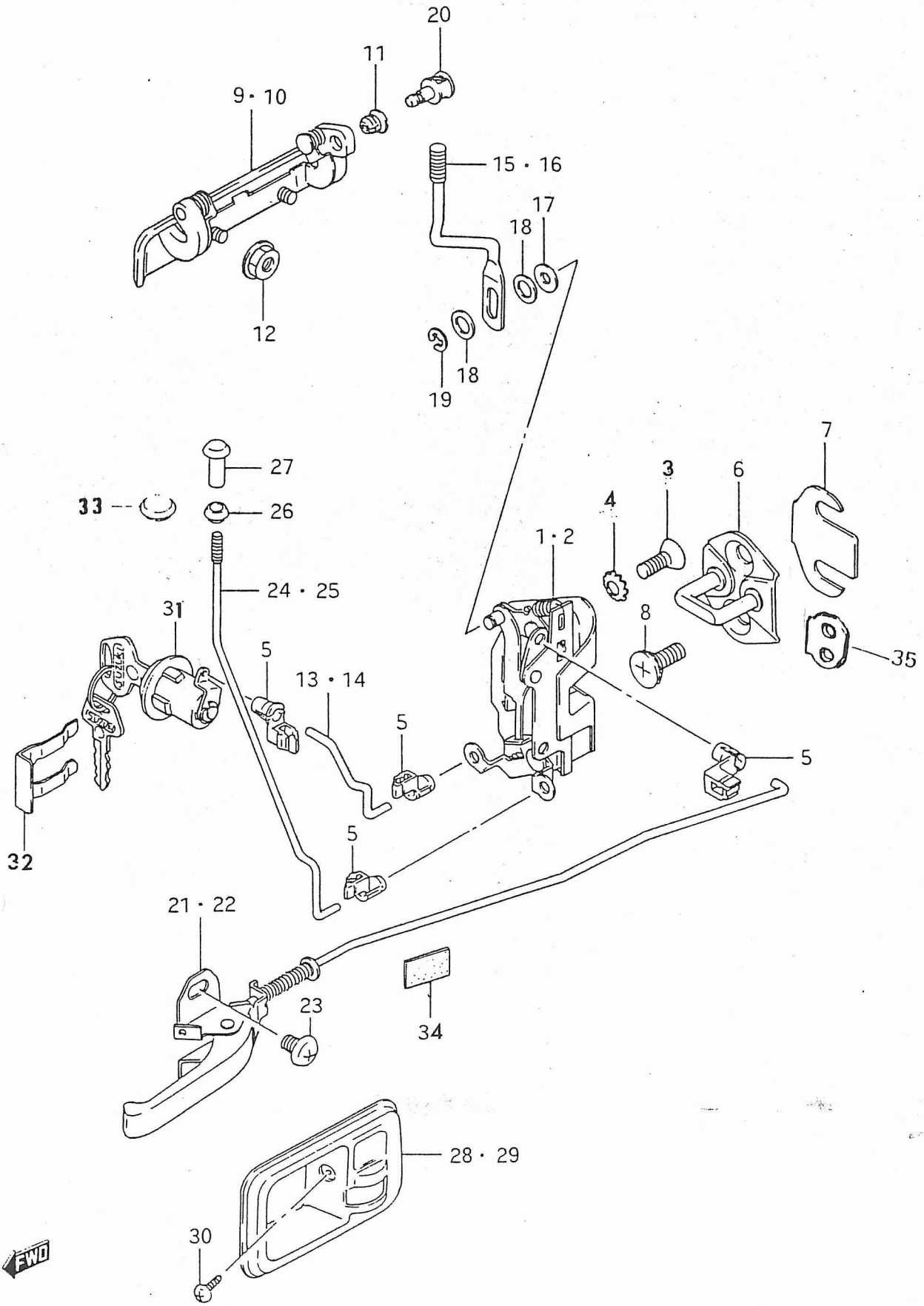
20
11
9・10
15・16
17
18
12
18
19
7
27
3
6
33
26
4
1・2
24・25
31
8
35
5
13・14
5
5
5
32
21・22
23
34
28・29
30
FWD

PUBLICACION N:A00523 GRUPO=CATAG SJ-413 SAMURAI SUBGRUPO=1K04CERRADURA PTA DE
EDICION N: 3 GROUP=CATAG S-413 SAMURAI SUBGROUP=1K04FRONT DOOR LOCK
GROUPE=CATAG SJ-413 SAMURAI SUBGROUPE=1K04FERMETURE PORTE

N.FIG PLATE N.FIG	N.PIEZA PARTNUMBER N.PIECE	CAN QTY OUT	DENOMINACION	DESCRIPTION	DENOMINATION	OBSERVACIONES
1	82201-80101	1	CERRADURA PTA LD	LOCK ASSY DOOR RH	FERMETURE PORTE CD	
2	82202-80101	1	CERRADURA PTA L/I	LOCK ASSY DOOR LH	FERMUTERE PORTE CG	
3	02132-06168	6	TORNILLO	SCREW	VIS	
4	08323-31068	6	ARANDELA	WASHER	RONDELLE	
5	09209-05016	8	PIEZA ACOPLAMIENTO	PIN CULINDER ROD	PIECE ACOUPPLEMENT	
6	82610-85000	2	CERRADERO	STRIKER LOCK	FERMETURE	
7	82681-80100	2	DISTANCIADOR	SPACER	ENTRETOISE	
8	09126A08005	4	TORNILLO	SCREW	VIS	
9	82810A80102	1	MANECILLA L/D	HANDLE DOOR RH	FERMOIR PORTE CD	
10	82820A80102	1	MANCILLA L/I	HANDLE DOOR LH	FERMOIR PORTE CG	
11	82891A80100	3	CIERRE	LOCK	FERMETURE	
12	08316-26066	6	TUERCA	NUT	ECROU	
13	82291-80100	1	VARILLA L/D	ROD CONTROL RH	TIGE CONMAMDER CD	
14	82292-80100	1	VARILLA L/I	ROD CONTROL LH	TIGE CONMANDER CG	
15	83211-80100	1	VARILLA MANDO L/D	ROD HANDLE RH	TIGE COMMANDER CD	
16	83212-80100	1	VARILLA MANDO L/I	ROD HANDLE LH	TIGE COMMANDER CG	
17	09161-04008	2	ARANDELA	WASHER	RONDELLE	
18	09161-06008	4	ARANDELA	WASHER	RONDELLE	
19	08332A11058	2	ANILLO RETENCION	E RING	ANNEAU	
20	77716-79000	2	TUERCA AJUSTE	NUT HANDLE	ECROU REGLAJE	
21	83110A80100	1	PALANCA LD GRIS	HANDLE RH GRAY	LEVIER CD GRIS	
	83110B80100	1	PALANCA LD MARRON	HANDLE RH BROWN	LEVIER CD MARRON	
22	83130A80100	1	PALANCA LI GRIS	HANDLE LH GRAY	LEVIER CG GRIS	
	83130B80100	1	PALANCA LI MARRON	HANDLE LH BROWN	LEVIER CG MARRON	
23	02142-06108	4	TORNILLO	SCREW	VIS	
24	83241-80100	1	VARILLA CONEXION L/D	ROD SAFETY LOCK RH	TIGE CONEX SECURITE	
25	83242-80100	1	VARILLA CONEXION L/I	ROD SAFETY LOCK LH	TIGE CONEX SECURITE	
26	78242B61000	2	EMBELLECEDOR GRIS	CASE GRAY	ENJOLIVEUR GRIS	
	78242C61000	2	EMBELLEC MARRON	CASE BROWN	ENJOLIVEUR MARRON	
27	78241A60002	2	POMO INT GRIS	KNOB INN GRAY	POIGNEE INT GRIS	
	78241B60002	2	POMO INT MARRON	KNOB INN BROWN	POIGNEE MARRON	
28	78471A79000	1	EMBELLEC.LD GRIS	CASE RH GRAY	ENJOLIVEUR CD GRIS	
	78471B79000	1	EMBELLEC LD MARRON	CASE RH BROWN	ENJOLIVEUR CD MARRON	
29	78481A79000	1	EMBELLEC LI GRIS	CASE LH GRAY	ENJOLIVEUR CG GRIS	
	78481B79000	1	EMBELLEC LI MARRON	CASE LH BROWN	ENJOLIVEUR LI MARRON	
30	03141-04085	2	TORNILLO	SCREW	VIS	
31	00000A00~~296~~ 689	1	LLAVE EN BRUTO	KEY BRUTE	CLE BRUTE	
	50024-00000	1	CONJ CERRADURAS	LOCKINS ASSY	ENS FERMETURE	H 78033
	*51590-00000	1	CERRADURA LD-LI	BARREL KEY RH LH	BARRILLET CD CG	D 78034
	51594-00000	1	CONJ.CERRADURAS	LOCKING ASSY	ENS FEMETURE	D 78034
	82270A80100	1	CERRADURA LD-LI	BARREL KEY RH-LH	BARRILLET CD-CG	H 78033
32	77461-78000	2	CLIP BOMBILLO	CLIP	CLIP CILINDRE	
33	09250-14003	2	TAPON POMO	CAP	BOUCHON	
34	77591-75000	2	RELLENO VARILLA	PAD ROD	BOURRE TIGE	
35	50104-00000	2	JUNTA CERRADERO	LOCK GASKET	JOINT FERMETURE	

* BOLETIN DE SERVICIO

VER PAG : 96

FIG.83

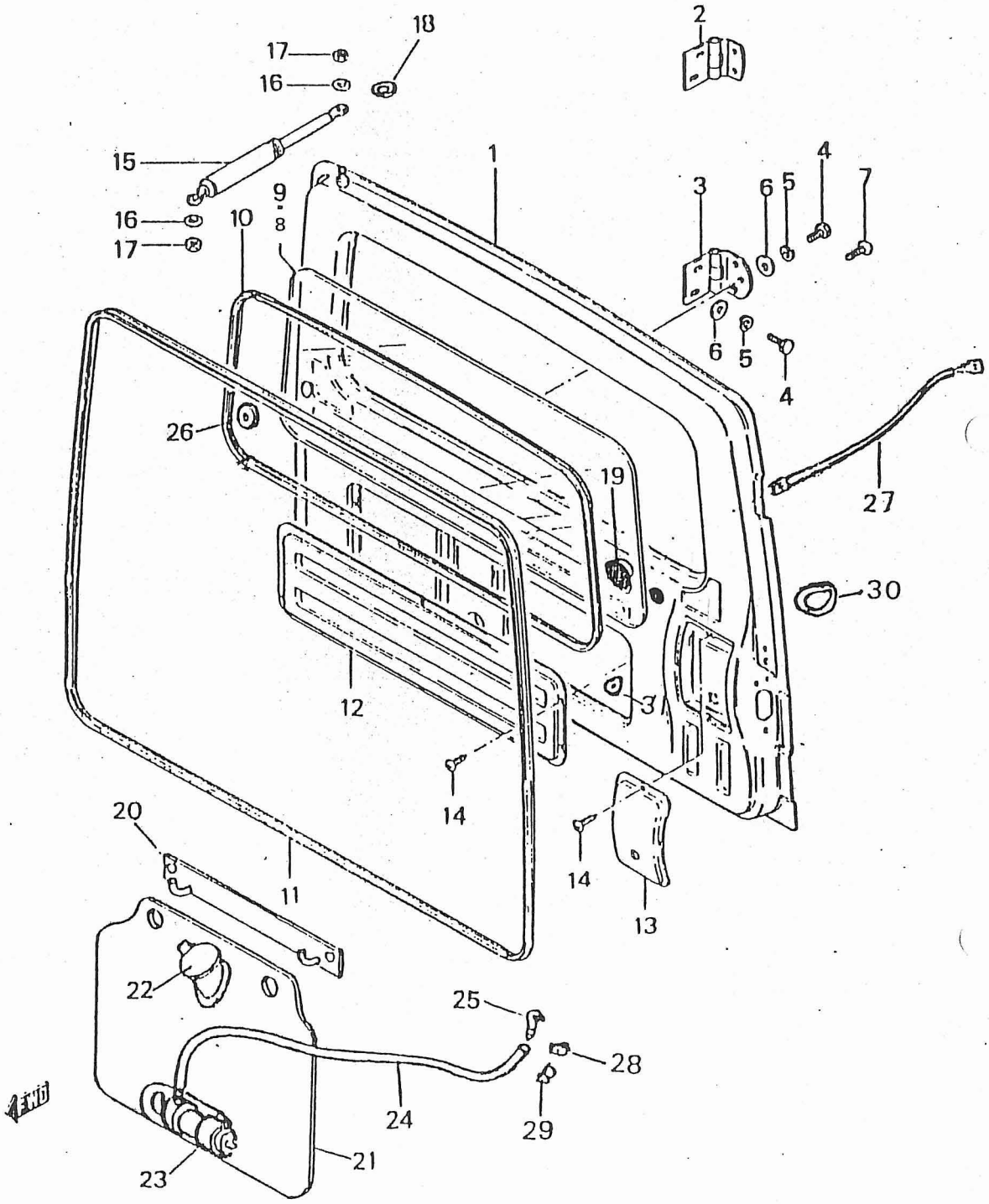
1
2
3
4
5
6
7
8
9
10
11
12
13
14
15
16
17
18
19
20
21
22
23
24
25
26
27
28
29
30
4WD

PUBLICACION N:A00523 GRUPO=CATAG SJ-413 SAMURAI SUBGRUPO=1K06PUERTA TRA.MOD V
EDICION N: 3 GROUP=CATAG S-413 SAMURAI SUBGROUP=1K06BACK DOOR MOD.V
GROUPE=CATAG SJ-413 SAMURAI SUBGROUPE=1K06HAYON AR MOD.V

N.FIG PLATE N.FIG	N.PIEZA PARTNUMBER N.PIECE	CAN QTY OUT	DENOMINACION	DESCRIPTION	DENOMINATION	OBSERVACIONES
1	69100-83511	1	C/PANEL PTA TRAS	PANEL ASSY BACK DOOR	PANNEAU PORTE AR.	
2	69510-80110	1	BISAGRA SUP PTA TRAS	HINGE DOOR UPPER	CHARNIERE PORTE SP	
3	69520-80110	1	BISAGRA INF PTA TRAS	HINGE DOOR LOWER	CHARNIERE PORTE INF	
4	09100-08167	4	TORNILLO	SCREW	VIS	
5	08321B31086	4	ARANDELA	WASHER	RONDELLE	
6	08322-21086	4	ARANDELA	WASHER	RONDELLE	
7	09125-08002	5	TORNILLO	SCREW	VIS	
8	78372-00000	1	LUNETA TERMICA	REAR DEMISTER	LUNETTE THERMIQUE	
9	84571-80132	1	CRISTAL PTA TRASERA	GLAS BACK WINDOW	GLACE PORTE ARRIERE	
10	84623A80100	1	PERFIL GOMA	WEATHERSTRIP WINDOW	CAOUTCHOUC FENETRE	
11	84681A80100	1	PERFIL GOMA	WEATHERSTRIP GAFE	CAOUTCHOUC PORTE	
12	83771-80100	1	TAPA AGUJERO PTA	LID SERVICE HOLE	COUVERCLE ORIFICE	
13	83772-80100	1	TAPA AGUJERO PEST	LID SERVICE HOLE	COUVERCLE ORIFICE	
14	03141-05128	12	TORNILLO	SCREW	VIS	
15	81860A80100	1	AMORTIGUADOR	WNIT DOOR BALANCER	AMORTISSEUR	
16	08322-21063	2	ARANDELA	WASHER	RONDELLE	
17	08310-11063	2	TUERCA	NUT	ECROU	
18	81860B80100	2	ARANDELA TOPE	RUBBER WASHER	RONDELLE CAOUTCHOUC	
19	09250-40002	2	TAPON	PLUG	BOUCHON	
20	50044-00000	1	PLACA SOPORTE	SUPPORT PLATE	PLAQUE SUPPORT	
21	35011-00000	1	DEPOSITO	WASHER FLUID TANK	RESSERVOIR ESSUI	
22	00000A00293	1	TAPON	PLUG	BOUCHON	
23	00000A00294	1	BOMBA	PUMP	POMPE	
24	35020-00000	1	TUBO 750	PIPE	TUYAU ESSUIE GLACE	
25	35013-00000	1	DIFUSOR	JET	GICLEUR	
26	35070-00000	5	PASACABLES	GROMMET	PASSECABLES	
27	35151-00000	1	CABLEADO LUNETA	WIRING GLASS	CABLAJE LUNETTE	
28	02004-00000	1	A CAUCHO	RUBBER WASHER	RONDELLE CAOUTCHOUC	
29	08322-11036	1	A PLANA	PLAIN WASHER	RONDELLE PLANE	
30	35069-00000	1	PASACABLES	GROMMET	PASSECABLES	
31	35001-00000	1	PASACABLES	GROMMET	PASSECABLES	

FIG.84

K- 07

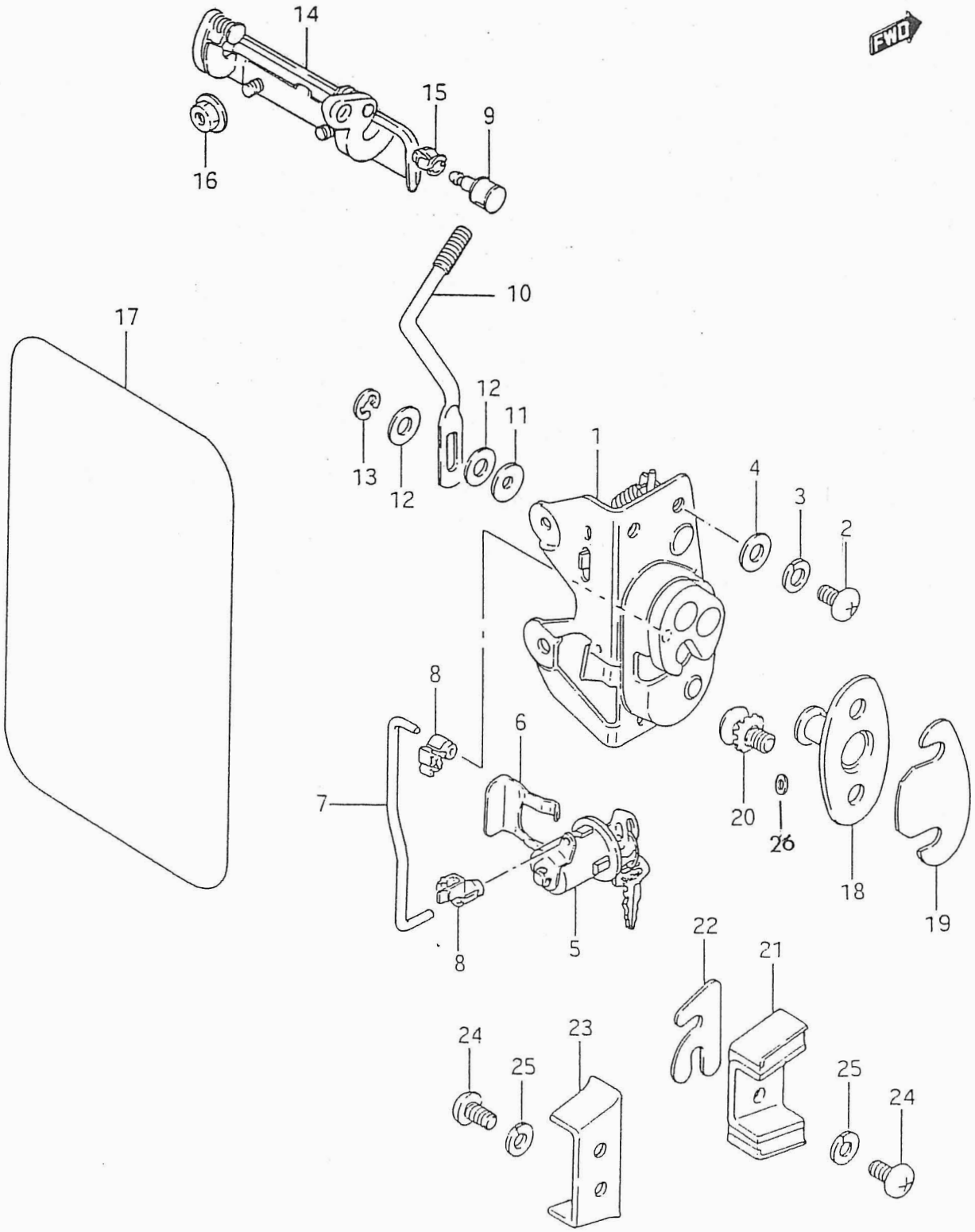
FWD
14
15
9
16
10
17
12
11
13
12
1
4
3
2
8
6
7
20
26
18
19
8
5
22
21
24
23
25
25
24

PUBLICACION N:A00523 GRUPO=CATAG SJ-413 SAMURAI SUBGRUPO=1K07CERRADURA PTA TR
EDICION N: 3 GROUP=CATAG S-413 SAMURAI SUBGROUP=1K07BACK DOOR LOCK
GROUPE=CATAG SJ-413 SAMURAI SUBGROUPE=1K07FERMETURE PORTE

N.FIG PLATE N.FIG	N.PIEZA PARTNUMBER N.PIECE	CAN QTY OUT	DENOMINACION	DESCRIPTION	DENOMINATION	OBSERVACIONES
1	82530-80100	1	CERRADURA PTA TRAS	LOCK REAR DOOR	FERMETURE PORTE AR	
2	02112-06123	3	TORNILLO	SCREW	VIS	
3	08321A31063	3	ARANDELA MUELLE	WASHER LOCK	RONDELLE RESSORT	
4	08322-21068	3	ARANDELA MUELLE	WASHER LOCK	RONDELLE RESSORT	
5*	51590-00000	1	CERRADURA PTA TRAS.	CYLINDER BACK DOOR	BARRILLET ET CLE AR	D 78034
	82270A80100	1	CERRADURA PTA TRASER	CYLINDER BACK DOOR	BARRILLET ET CLE AR	H 73033
6	77461-78000	1	CLIP CERRADURA	CLIP	CLIP	
7	82581-80100	1	VARILLA CONTROL	ROD CONTROL	TIGE CONTROLE	
8	09209-05016	2	PIEZA ACOPLAMIENTO	PIN LOCK ROD	PIECE ACCOUPLEMENT	
9	77716-79000	1	TUERCA DE AJUSTE	NUT HANDLE	ECROU DE REGLAJE	
10	83231-80100	1	VARILLA	ROD	TIGE	
11	09161-04008	1	ARANDELA	WASHER	RONDELLE	
12	09161-06008	2	ARANDELA	WASHER	RONDELLE	
13	08332A11058	1	ANILLO	ERING	ANNEAU	
14	82810A80102	1	MANECILLA EXTERIOR	HANDLE DUSTSIDE	FERMETURE PORTE AR	
15	82891A80100	2	CIERRE	LOCK	ARREST	
16	08316-26066	2	TUERCA	NUT	ECROU	
17	83912-80100	1	CUBIERTA SELLANTE	COVER	COUVERCLE	
18	78100-79000	1	CERRADURA	STRIKER DOOR LOCK	FERMETURE	
19	78199-79000	2	DISTANCIADOR	SPACER	ENTRETOISE	
20	09126A08005	2	TORNILLO	SCREW	VIS	
21	78251-68200	1	TOPE	STOP MALE	BUTEE	
22	77891-63100	2	DISTANCIADOR	SPACER	ENTRETOISE	
23	78261-68200	1	RESBALON	STOP FEMALE	CHOC	
24	02112-06163	4	TORNILLO	SCREW	VIS	
25	08321A31063	4	ARANDELA	WASHER	RONDELLE	
26	09163A08002	2	ARANDELA GROWER	WASHER GROWER	RONDELLE GROWER	

* VER PAG 93

FIG. 85

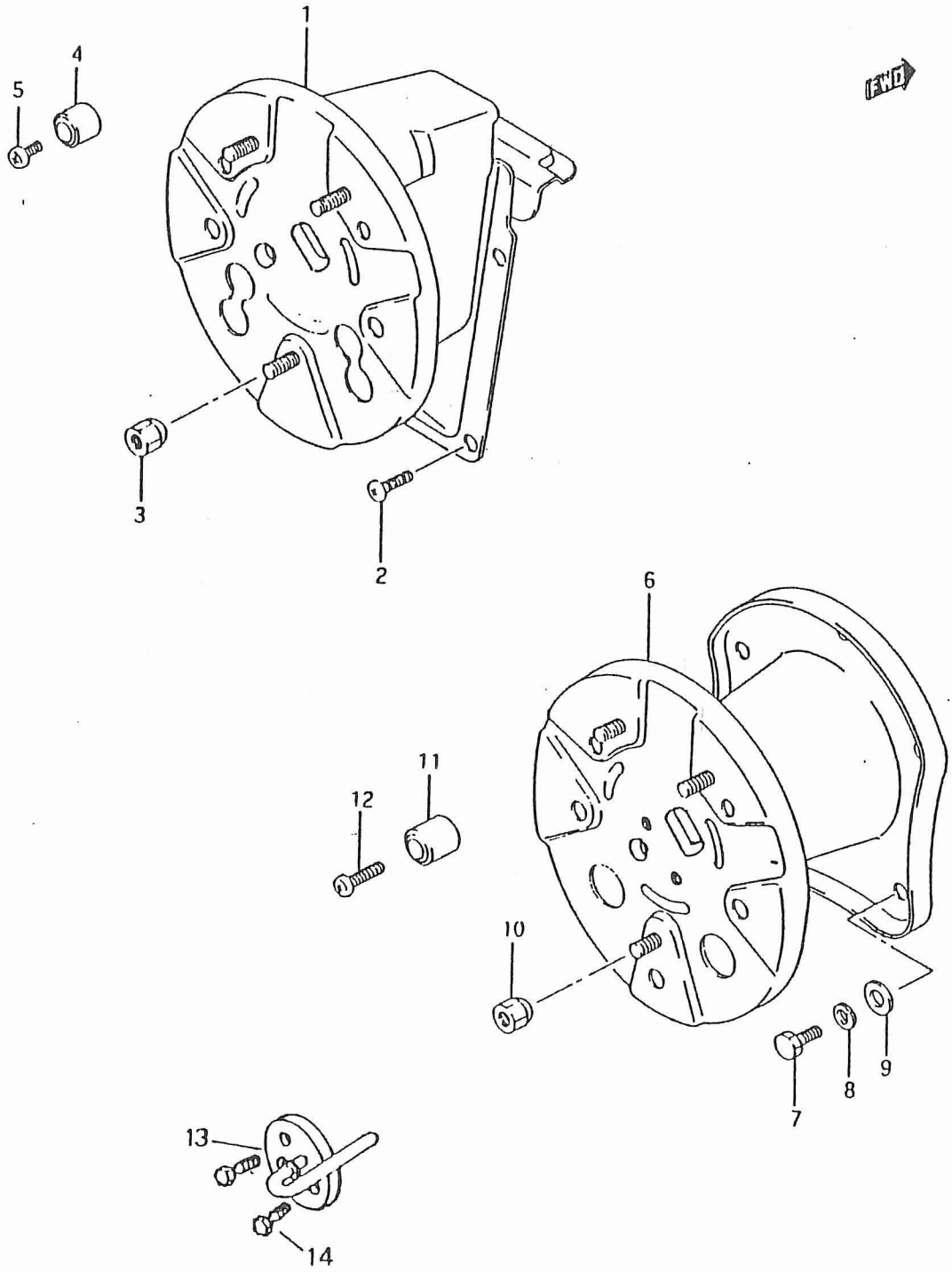

PUBLICACION N:A00523 GRUPO=CATAG SJ-413 SAMURAI SUBGRUPO=1K08RUEDA REPUESTO
EDICION N: 3 GROUP=CATAG S-413 SAMURAI SUBGROUP=1K08TIRE CARRIER
GROUPE=CATAG SJ-413 SAMURAI SUBGROUPE=1K08SUPPORT ROUE

N.FIG PLATE N.FIG	N.PIEZA PARTNUMBER N.PIECE	CAN QTY OUT	DENOMINACION	DESCRIPTION	DENOMINATION	OBSERVACIONES
1	51601-00000	1	SOP.RUEDA MOD-J	CARRIER APARE MOD-J	SOPPORT ROUE MOD-J	D 78034
	51665-00000	1	SOPORTE RUEDA	CARRIER SPARE	SUPPORT ROUE	LONG BODY
	72810B80022	1	SOP RUEDA MOD-I	CARRIER SPARE MOD-J	SUPPORT ROUE MOD-J	H 78023
2	09125-08002	6	TORNILLO	SCREW	VIS	
3	09159A12009	3	TUERCA	NUT	ECROU	
4	09320-06006	3	APOYO RUEDA	CUSCHION	SILENTBLOC	
5	02112-06163	3	TORNILLO	SCREW	VIS	
6	51603-00000	1	SOP.RUEDA MOD--V	CARRIER SPARE MOD-V	SUPPORT ROUE MOD-V	D 78024
	83960A83501	1	SOP RUEDA MOD V	CARRIER SPARE MOD V	SUPPORT ROUE MDO V	H 78033
7	01104-10203	5	TORNILLO	SCREW	VIS	
8	08321B31103	5	ARANDELA	WASHER	RONDELLE	
9	08322-11103	5	ARANDELA	WASHER	RONDELLE	
10	09159A12009	3	TUERCA RUEDA	NUT	ECROU	
11	09320-06011	2	APOYO	CUSHION	CHOC	
	09320A06014	3	APOYO GOMA	CUSHION	SILENBLOC	
	09320B06014	3	APOYO	CUSHION	SILENTBLOC	FRANCIA
12	02112-06166	3	TORNILLO	SCREW	VIS	
13	50670-00000	1	ANTI-ROBO RUEDA	ANTI-THIEF WHEEL	ANTI-VOL ROUE	H 78033
	51600-00000	1	ANTI-ROBO RUEDA	ANTI-THIRF WHEEL	ANTI-VOL ROUE	D 78034
14	00000A00365	2	TORNILLO SEGURIDAD	SECURITY BOLT	VIS SECURITE	

FIG.86

K - 09

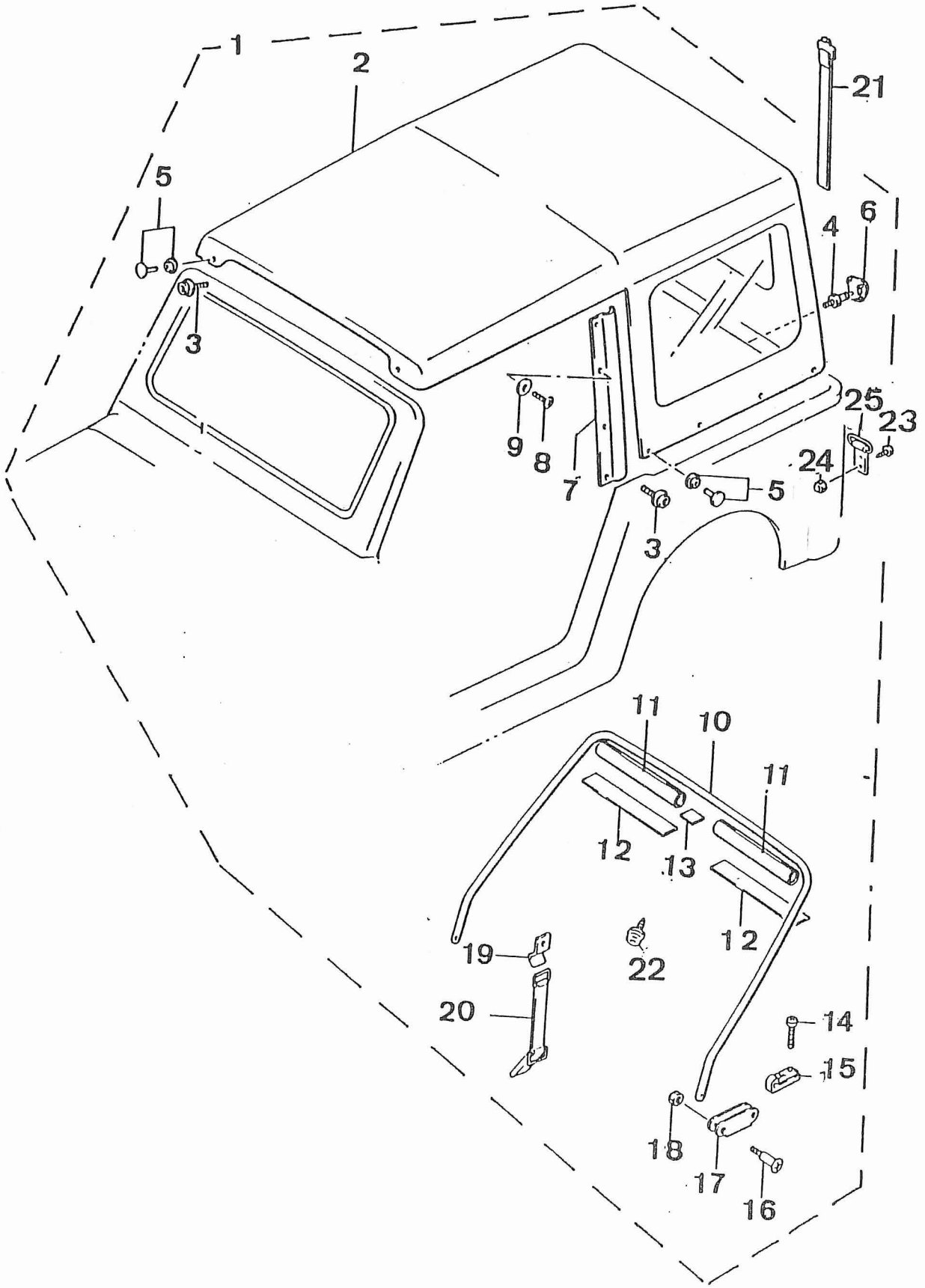

PUBLICACION N:A00523 GRUPO=CATAG SJ-413 SAMURAI SUBGRUPO=1K09TOLDO ARQUILLOS
EDICION N: 3 GROUP=CATAG S-413 SAMURAI SUBGROUP=1K09ROOF ASSY CANVAS
GROUPE=CATAG SJ-413 SAMURAI SUBGROUPE=1K09NACHE/ARCEAUX

N.FIG PLATE N.FIG	N.PIEZA PARTNUMBER N.PIECE	CAN QTY OUT	DENOMINACION	DESCRIPTION	DENOMINATION	OBSERVACIONES
1	00000A00211	1	C/TECHO LONA GRIS	CANVAS HOOD GRAY ASS	ENS BACHE GRIS	
	00000A00212	1	C/TECHO LONA BLANCO	CANVAS HOOD WHITE	ENS BACHE BLANC	
2	78301A83200	1	TECHO SOLO GRIS	CANVAS HOOD GRAY	BACHE GRIS	
	78310-83210	1	TECHO SOLO BLANCO	CANVAS HOOD WHITE	BACHE BLANC	
3	78491-80010	12	GANCHO DEL MACHO	HOOK FRONT	CROCHET AVANT	
4	79134-73002	4	GANCHO DEL MACHO	HOOK FRONT	CROCHET AVANT	
5	78321-80001	12	CORCHETE HEMBRA LAT	HOOKSET SIDE	CROCHET LATERAL	
	79100-63860	12	CORCHETE CROMADO	HOOK SET CHROME	CROCHET CROME	
6	79133-63041	4	CORCHETE HEMBRA	HOOK MALE REAR	CROCHET AR	
7	78411-80101	2	PERFIL LATERAL	RAIL SIDE	PROFILE LATERALE	
8	02142-06103	8	TORNILLO	SCREW	VIS	
9	09161-04011	4	A PLANA	WASHER	RONDELLE	
10	78470-80001	1	MARCO ARCO TRAS	FRAME REAR	ARCEAU AR	
11	78482-80301	2	ALMAHODILLA	CUSHION TOP BOW	APPUIE ARQUE SUP	
12	78476-80001	2	ALMOHADILLA	CUSHION TOP BOW	APPUI ARQUE SUP	
13	78476-80001	1	APOYO ARCO SUP	PAD	APPUI ARQUE SUP	
14	02112-06303	4	TORNILLO	SCREW	VIS	
15	78481-80000	2	BISAGRA MACHO	HINGE TOP	CHARNIERE SUP	
16	78488-80000	4	PASADOR	PIN HINSE	CLAVETTE CHARNIERE	
17	78485-80000	2	BISAGRA HEMBRA	HINGE FAMELE	CHARNIERE	
18	08313A11066	4	TUERCA	NUT	ECROU	
19	76421-80001	1	GANCHO SUPERIOR	UPPER HOOK	CROCHET SUP	
20	09462-00040	2	TIRA SUPERIOR	STRAP	TIRANT	
21	78490-83000	2	CINTA TENSOR TOLDO	STRAP TENDEUR HOOD	TIRANT TENDEUR	
22	78491-83000	2	TORNILLO MACHO	SCREW MALE	VIS FAMELE	
23	02142-06103	1	TORNILLO	SCREW	VIS	
24	08313B11083	2	TUERCA	NUT	ECROU	
25	78415-83000	2	SOPORTE TENSOR	BRACKET TENDER.	SUPPORT TENDEUR	

FIG. 86.1

K - 10

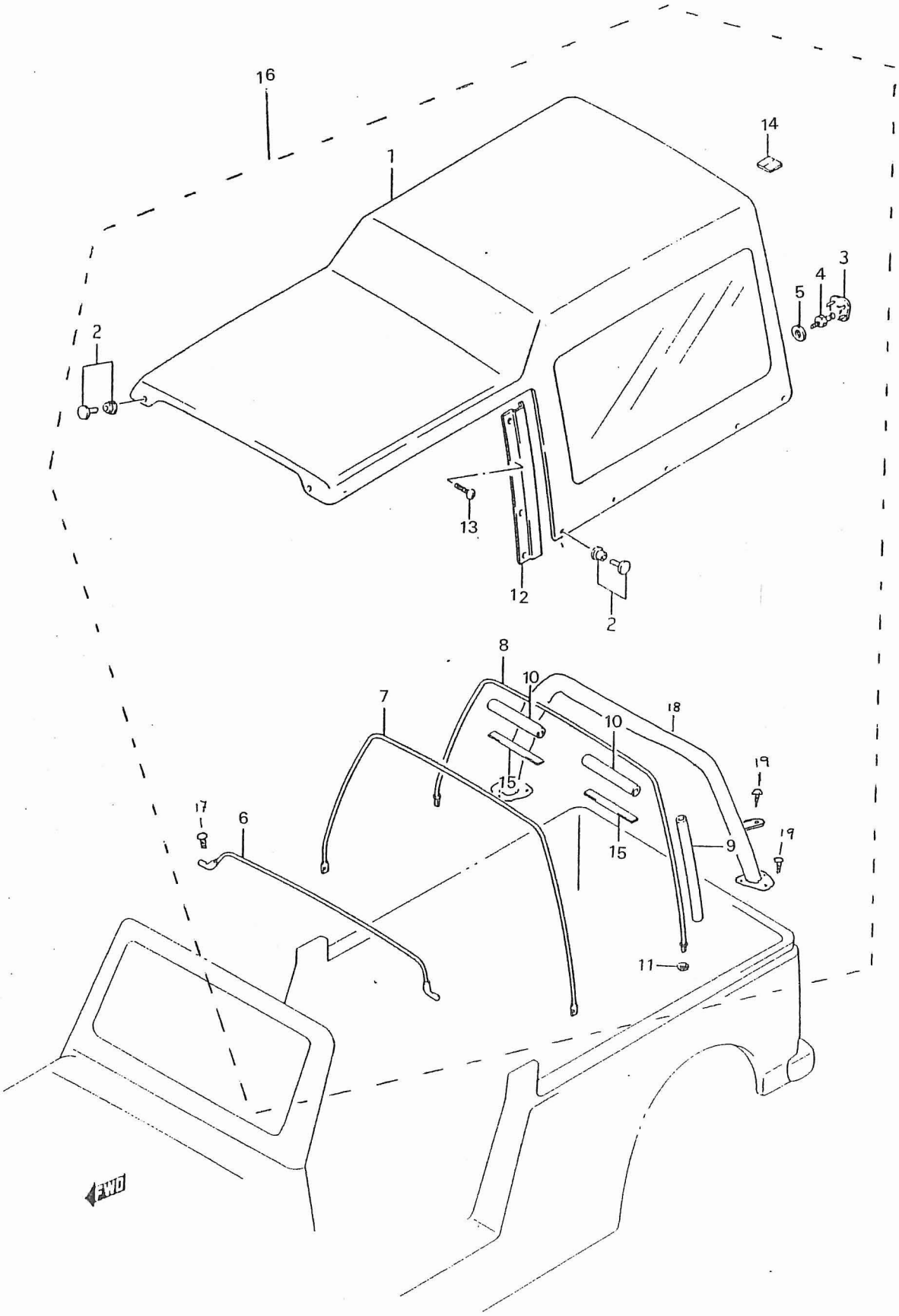

PUBLICACION N:A00523 GRUPO=CATAG SJ-413 SAMURAI SUBGRUPO=1K10TOLDO LONG BODY
EDICION N: 3 GROUP=CATAG S-413 SAMURAI SUBGROUP=1K10CANVAS LONG BODY
GROUPE=CATAG SJ-413 SAMURAI SUBGROUPE=1K10BACHE LONG BODY

N.FIG PLATE N.FIG	N.PIEZA PARTNUMBER N.PIECE	CAN QTY OUT	DENOMINACION	DESCRIPTION	DENOMINATION	OBSERVACIONES
1	73310-83353	1	TOLDO LONA NEGRO	CANVAS HOOD BLACK	BACHE NOIRE	
	78310-83343	1	TOLDO LONA GRIS	07 LONG BODY	BACHE GRIS	
	78310A83353	1	TOLDO LONA BLANCO	07 LONG BODY	BACHE BLANC	
2	78491-80011	16	CORCHETE MACHO	HOOK MALE	CROCHET	
3	79133-63041	4	CORCHETE HEMBRA	07 LONG BODY	CROCHET	
4	79134-73002	4	CORCHETE MACHO TRAS.	HOOK MALE REAR	CROCHET ARRIERE	
5	09161-04011	4	A.PLANA	07 LONG BODY	RONDELLE	
6	78510-80300	1	VARILLA DELANTERA	07 LONG BODY	TIGE AVANT	
7	78481-80340	1	ARQUILLO INTERMEDIO	07 LONG BODY	ARCEAU INTERDITE	
8	78470-80341	1	ARQUILLO TRASERO	07 LONG BODY	ARCEAU ARRIERE	
9	78482-30301	2	ALMOHADILLA TOLDO	07 LONG BODY	RECUBRIM. ARCEAU.	
10	78483-80301	4	RECUBRIMIENTO ARQUI.	CUSHION UPPER	RECUB.SUPERIOR.	
11	78445-80001	2	APOYO ARQUILLO	07 LONG BODY	APPUI CENTRAL	
12	78411-80101	2	PERFIL LAT. TOLDO	07 LONG BODY	PROFIL LAT. BACHE.	
13	02142-06103	8	TORNILLO	07 LONG BODY	VIS	
14	78476-80001	1	APOYO SUP. TRAS	07 LONG BODY	APPUI ARRIERE	
15	78484-80300	6	LAMINA ARCO	07 LONG BODY	LAMINE ARCEAU	
16	00000A00674	1	CONJ.TECHO LONA GRIS	CANVAS ROOF ASSY GRA	ENS TOIT BACHE GRIS	
	00000A00675	1	COJ.TECHO LONA BLANC	CANVAS ROOF ASS.WHIT	ENS TOIT BACHE BLANC	
	00000A00676	1	COJ.TECHO LONA NEGRO	CANVAS ROOF ASS.BLAC	ENS TOIT BACHE NOIRE	
17	02142-06125	2	TORNILLO	SCREW	VIS	
18	78660-80340	1	ARCO TRASERO	REAR PIPE	ARCEAU ARRIERE	
19	09125-08002	8	TORNILLO	SCREW	VIS	

FIG. 87

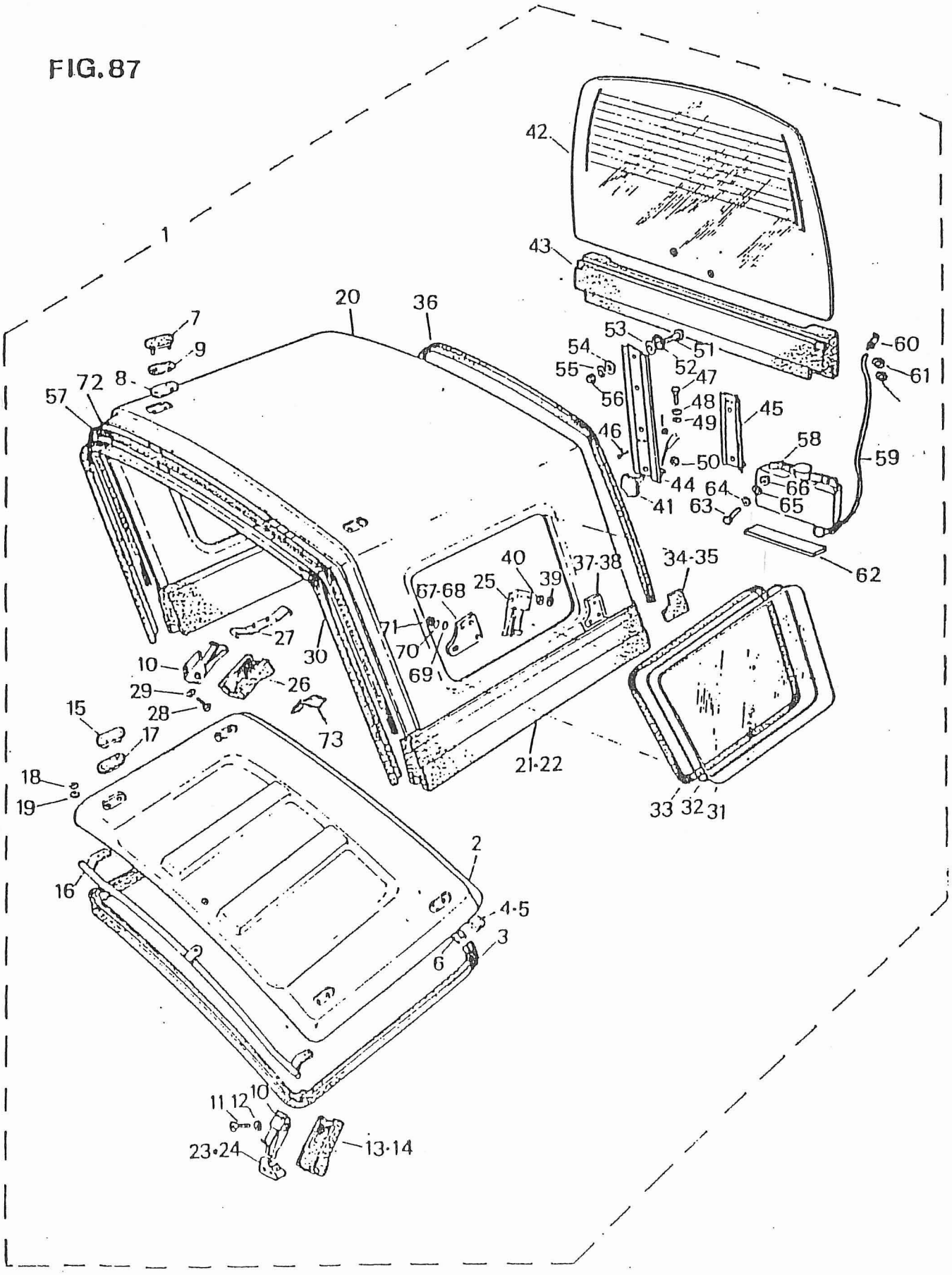
1
2
3
4·5
6
7
8
9
10
11 12
13·14
15
16
17
18
19
20
21·22
23·24
25
26
27
28
29
30
31
32
33
34·35
36
37·38
39
40
41
42
43
44
45
46
47
48
49
50
51
52
53
54
55
56
57
58
59
60
61
62
63
64
65
66
67·68
69
70
71
72
73

PUBLICACION N:A00523 GRUPO=CATAG SJ-413 SAMURAI SUBGRUPO=1K14TECHO POLIESTER
EDICION N: 3 GROUP=CATAG S-413 SAMURAI SUBGROUP=1K14HARD-TOP
GROUPE=CATAG SJ-413 SAMURAI SUBGROUPE=1K14BACHE HARD TOP

N.FIG PLATE N.FIG	N.PIEZA PARTNUMBER N.PIECE	CAN QTY OUT	DENOMINACION	DESCRIPTION	DENOMINATION	OBSERVACIONES
1	CS-2006KIT	1	CONJ TECHO PLASTICO	ROOF ASSY PLASTICO	ENS TOIT BLANC	
	CS2096-KIT	1	TECHO NEGRO PLASTI	ROOF ASSY BLACK H-T	ENS TOIT NOIR	
2	50391-00000	1	TECHO NEGRO DELANTER	ROOF BLACK FRONT	TOIT NOIRE AV	
	78338-00000	1	TECHO DELANTERO	FRONT ROOF	TOIT AVANT	
3	78339-00000	1	GOMA TECHO DELANTERO	TUBBE FRONT ROOF	CAUTCHOUC TOIT AV	
4	50065-00000	1	PERFIL SELLANTE TECH	SEALING ROOF	PROFILE ETANCHEITE	
5	50064-00000	2	PERFIL GOMA LONE	PROFIL RUBBER	PROFILE CAOUTCHOUC	
6	50067-00000	1	GOMA TRAS TECHO DEL	RUPPER FRONT ROOF	CAOUTCHOUC	
7	78325-00000	2	PLACA FIJ ENGANCHE	PLATE ASSY	PLAQUE CROCHET	
8	78328-00000	4	COMPLEMENTO	SHIM	SUPPLEMENT	
9	78329-00000	2	JUNTA CAUCHO	GASKET	JOINT	
10	78330-00000	6	CIERRE RAPIDO	QUICK LOCK	FERMENTURE RAPIDE	
11	02112-05126	4	TORNILLO	SCREW	VIS	
12	08321A31056	4	ARANDELA	WASHWER	RONDELLE	
13	78368-00000	1	TAPA CIERRE LI	QUICK LOCL COVER RH	COUVERC FERMETURE D	
14	78369-00000	1	TAPA CIERRE LD	QUICK LOCK COVER LH	COUVERC FERMENTURE G	
15	78343-00000	2	PLACA FIJ TECHO DEL	FIXING PLATE	PLAQUE FIXATION	
16	78344-00000	1	BARRA TRANVERSAL	FRONT ROD ASSY	BARRE TRANSVERSALE	
17	78350-00000	2	JUNTA GOMA	GASKE	JOINT	
18	09160-06020	4	ARANDELA	WASHER	RONDELLE	
19	08319A21066	4	TUERCA	NUT	ECROU	
20	50389-00000	1	TECHO NEGRO TRASERO	ROOF BLACK REAR	TOIT NOIRE AR	
	78301-00000	1	TECHO TRASERO	REAR ROOF	TOIT ARRIERE	
21	78303-00000	1	MOLDURA LI	MOULD NG LH	MOULURE CG	
22	78304-00000	1	MOLDURA LD	MOULDING RH	MOULURE CD	
23	78335-00000	1	ENGANCHE LI PARABRIS	HOOK LH	CROCHET	
24	78336-00000	1	ENGANCHE PARABRI LD	HOOK RH	CROCHET CD	
25	78324-00000	2	CIERRE RAPIDO	QUIICK LOCK	FERMENTURE	
26	78367-00000	4	TAPA CIERRE	QUIICK LOCK COVER	FERMENTURE COUVERCLE	
27	78333-00000	2	ENGANCHE CIERRE HOOK	QUICK LOCK	CROCHET FERMENTURE	
28	02142-04106	6	TORNILLO	SCREW	VIS	
29	08321A31046	6	ARANDELA	WASHER	RONDELLE	
30	78308-00000	1	GOMA TECHO TRASERO	RUBBER ROOF FRONT	CAOUTCHOUC TOIT AV	
31	78305-00000	2	CRISTAL LATERAL	SIDE GLASS	GLACE LATERALE	
32	78306-00000	2	GOMA FIJACION	RUBBER	CAOUTCHOUC	
33	78307-00000	2	GOMA CIERRE	RUBBER	CAOUTCHOUC	
34	78310-00000	1	PLACA EXT TRAS LI	PLATE REAR LH	PLAQUE AR CG	
35	78313-00000	1	PLACA EXT TRAS LD	PLATE REAR RH	PLAQUE AR CD	
36	78309-00000	1	GOMA PTA TRAS	RUBBER DOOR REAR	CAOUTCHOUC PORTE	
37	78315-00000	1	PLACA INT TRAS LI	PLATE INNER REAR LH	PLAQUE INT AR CG	
38	78318-00000	1	PLACA INT TRAS LD	PLATE INNER REAR RH	PLAQUE INT AR CD	
39	09160-06019	8	A PLANA	WASHER	RONDELLE	

FIG. 87. 1

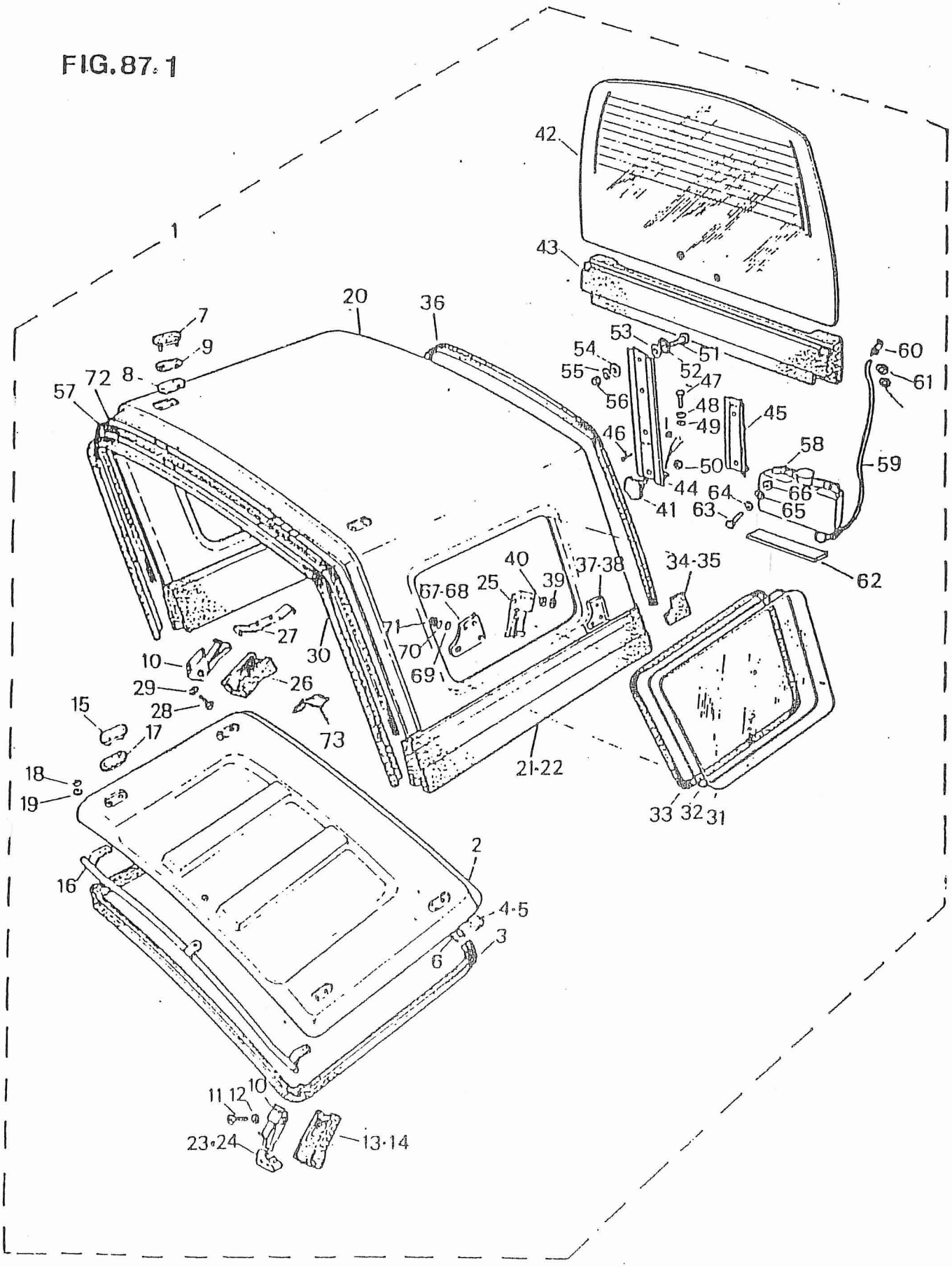
1
2
3
4·5
6
7
8
9
10
11 12
13·14
15
16
17
18
19
20
21·22
23·24
25
26
27
28
29
30
31
32
33
34·35
36
37·38
39
40
41
42
43
44
45
46
47
48
49
50
51
52
53
54
55
56
57
58
59
60
61
62
63
64
65
66
67·68
69
70
71
72
73

PUBLICACION N:A00523 GRUPO-CATAG SJ-413 SAMURAI SUBGRUPO-1K12CRISTAL T.PLASTI
EDICION N: 2 GROUP-CATAG S-413 SAMURAI SUBGROUP-1K12GLASS HARD TOP
GROUPE-CATAG SJ-413 SAMURAI SUBGROUPE-1K12GLACE HARD TOP

N.FIG PLATE N.FIG	N.PIEZA PARTNUMBER N.PIECE	CAN QTY OUT	DENOMINACION	DESCRIPTION	DENOMINATION	OBSERVACIONES
40	08313A11066	8	TUERCA	NUT	ECROU	
41	78364-00000	4	POMO FIJ CRISTAL	KNOB GLASS	POIGNEE	
42	78355-00000	1	CRISTAL PTA TRAS	GLASS DOOR REAR	VITRE PORTE AR	
43	78357-00000	1	MOLDURA CRISTAL	MOULDING GLASS	MOULURE VITRE	
44	78358-00000	2	PLACA FIJ CRISTAL	FIXING PLATE	PLAQUE FIX VITRE	
45	78341-00000	2	SOPORTE CRISTAL	BRACKET GLASS	SUPPORT VITRE	
46	02142-06165	4	TORNILLO	SCREW	VIS	
47	01107-06166	4	TORNILLO	SCREW	VIS	
48	08322-21066	4	ARANDELA	WASHER	RONDELLE	
49	08321A31066	8	ARANDELA	WASHER	RONDELLE	
50	04007-00000	4	TUERCA	NUT	ECROU	
51	78362-00000	4	TORNILLO	SCREW	VIS	
52	78359-00000	4	TOPE EXT	STOPPER	BUTEE	
	78361-00000	4	TOPE	STOPPER	BETEE	
53	78360-00000	4	ARANDELA GOMA	RUBBER WASHER	RONDELLE	
54	09160-08075	4	ARANDELA	WASHER	RONDELLE	
55	184276	4	ARANDELA	WASHER	RONDELLE	
56	08313A11085	4	TUERCA	NUT	ECROU	
57	50060-00000	1	GOMA DEL BARRA	RUBBER FRONT BAR	CAOUTCHOUC AV BARRE	
58	00000A00292	1	TAPON DEPOSITO	CAP TANK	BOUCHON RESERVOIR	
	38400F80000	1	DEPOSITO DE AGUA	TANK ASSY	RESERVOIR EOU	
59	35012-00000	1	TUBO DE AGUA	WATER HOSE	TUYAU EOU	
60	35013-00000	1	SURTIDOR	JET	GICLEUR	
61	09320-09004	3	A. JUNTA	GASKET WASHER	JOINT RONDELLE	
62	35038-00000	2	TIRA SELLANTE	SEALING STRIP	BANDE SELLANT	
63	09125-08002	2	TORNILLO	SCREW	VIS	
64	09160-08033	2	ARANDELA	WASHER	RONDELLE	
65	08310-12086	2	TUERCA	NUT	ECROU	
66	09160-08075	2	ARANDELA	WASHER	RONDELLE	
67	78320-00000	1	ENGANCHE TRAS LI	REAR HOOK LH	CROCHET AR CG	
68	78323-00000	1	ENGANCHE TRAS LD	FRONT HOOK RH	CROCHET AR CD	
69	09160A06019	8	ARANDELA	WASHER	RONDELLE	
70	08321A31066	8	ARANDELA	WASHER	RONDELLE	
71	08313A11066	8	TUERCA	NUT	ECROU	
72	50069-00000	1	PERFIL PROTBARRA	PROFIL BAR	PROFILE PROT BARRE	
73	78366-00000	4	PLETINA CIERRE	LOCK PLATE	PLAQUE FERMETURE	

FIG. 87.2

K - 14

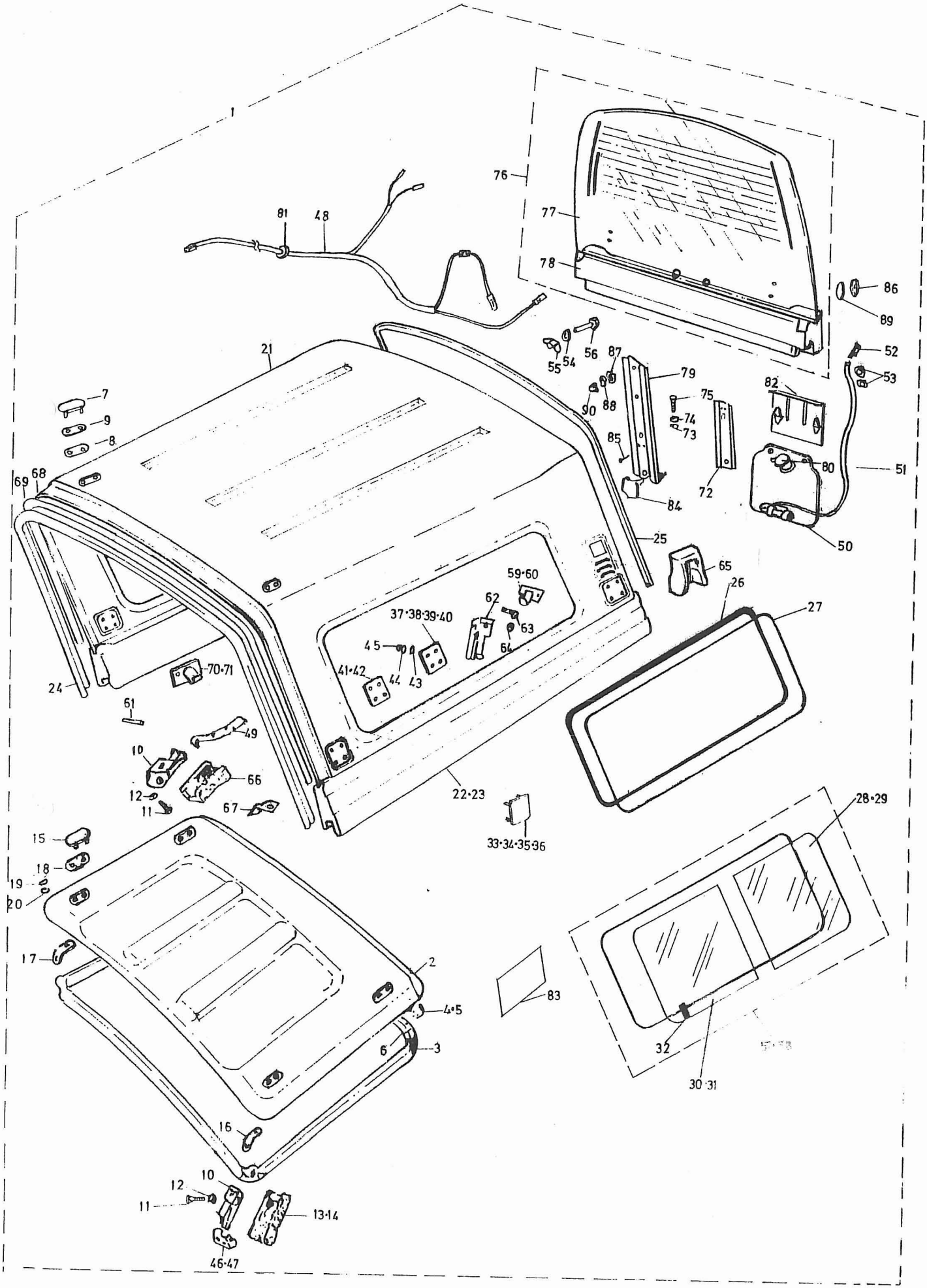

1
76
77
78
81
48
86
89
52
53
21
55
54
56
87
79
82
7
9
8
90
88
75
74
73
85
80
51
69
68
72
84
50
25
65
26
27
59·60
62
37·38·39·40
63
64
45
41·42
44
43
70·71
24
61
49
10
66
12
11
67
22·23
33·34·35·36
28·29
15
18
19
20
17
2
83
4·5
6
3
32
30·31
16
10
12
11
13·14
46·47

PUBLICACION Nº A00523

EDICION Nº 3 BIS

GRUPO-CATAG. SJ-413 SAMURAI
GROUP-CATAG. SJ-413 SAMURAI
GROUPE-CATAG. SJ-413 SAMURAI

SUBGRUPO-K-14-1 HARD-TOP
SUBGROUP-K-14-1 HARD-TOP
SUBGROUPE-K-14-1 HARD-TOP

Nº FIG. PLATE Nº FIG.	Nº PIEZA PARTNUMBER Nº PIECE	CANT. QTY OUT	DENOMINACION	DESCRIPTION	DENOMINATION	OBSERVACIONES
1	CS 2302-KIT	1	CONJ. TECHO BLANCO	ROOF ASSY PLASTIC.	ENS TOIT BLANC	UK
	CS 2238-KIT	1	CONJ. TECHO BLANCO	ROOF ASSY PLASTIC.	ENS TOIT BLANC	
	CS 2278-KIT	1	CONJ. TECHO NEGRO	ROOF ASSY PLASTIC.	ENS TOIT NOIR	
2	51717-00000-R	1	TECHO DELAN. BLANCO	FRONT ROOF	TOIT AVANT BLANC	
	51800-00000	1	TECHO DELAN. NEGRO	FRONT ROOF	TOIT AVANT NOIR	
3	78339-00000	1	GOMA TECHO DELANTERO	TUBBE FRONT ROOF	CAOUTCHOUT TOIT AVANT	
4	50065-00000	1	PERFIL SELLANTE TECHO	SEALING ROOF	PROFIL ETANCHEITE TOIT	
5	50064-00000	2	PERFIL SELLANTE VIERT.	SEALING PROFIL	PROFIL ETANCHEITE REDETEAU	
6	50067-00000	1	GOMA TRAS. TECHO DEL.	REAR RUBBER FRONT ROOF	CAOUTCHOUT ARRIERE TOIT AVANT	
7	78325-00000	4	CONJ.PLACA FIJAC.TRA.SUP	PLATE ASSY FIXING	ENS. PLAQUE FIXAGE TOIT	
8	78328-00000	8	SUPLEMENTO	SHIM	SUPPLEMENT	
9	78329-00000	4	JUNTA	GASKET	JOINT	
10	78330-00000	6	CIERRE RAPIDO	QUICK LOCK	FERMETURE RAPIDE	
11	02142-04106	12	TORNILLO	SCREW	VIS	
12	08321A31046	12	A. GROWER	WASHER	RONDELLE GROWER	
13	78368-00000	1	TAPA CIERRE RAP. L/I.	QUICK LOCK COVER LH	COUVERCLE FERMETURE RAPIDE C/G	
14	78369-00000	1	TAPA CIERRE RAP. L/D.	QUICK LOCK COVER RH	COUVERCLE FERMETURE RAPIDE C/D	
15	78343-00000	2	CONJ. PLACA FIJACION	FIXING PLATE ASSY	ENS.PLAQUE FIXAGE	
16	51502-00000	1	PLACA EXTREMA L/I.	PLATE LH	PLAQUE FERMETURE CG	
17	51501-00000	1	PLACA EXTREMA L/D.	PLATE RH	PLAQUE FERMETURE CD	
18	78350-00000	2	JUNTA	GASKET	JOINT	
19	09160-06020	4	A. PLANA	WASHER	RONDELLE	
20	08319A21066	4	TUERCA AUTOFRENANTE	NUT	ECROU	
21	51801-00000	1	TECHO TRAS. BLANCO	REAR ROOF	TOIT ARRIERE BLACN	
	51808-00000	1	TECHO TRAS. NEGRO	REAR ROOF	TOIT ARRIERE NOIR	
22	51815-00000	1	MOLDURA INFERIOR L/I.	REAR MOULDING LH	MOULURE INF. CG	
23	51816-00000	1	MOLDURA INFERIOR L/D.	REAR MOULDING RH	MOULURE INF. CD	
24	78308-00000	1	GOMA DELNT.TECHO TRAS.	FRONT RUBBER REAR ROOF	CAOUTCHOUT AVANT TOIR ARRIERE	
25	78309-00000	1	GOMA PUERTA TRAS.	RUBBER REAR DOOR	CAOUTCHOUT PORTE ARRIERE	
26	51669-00000	2	GOMA FIJAC.VENTANA	RUBBER FIXING GLASS	CAOUTCHOUT FIXAGE FENETRE	
27	51670-00000	2	PERFIL DE CIERRE	PROFIL LOCK	PROFIL FERMETURE	
28	00000A00684	1	CRISTAL FIJO L/I.	FIXED GLASS LH	VITRE FIXE CG	
29	00000A00686	1	CRISTAL FIJO L/D.	FIXED GLASS RH	VITRE FIXE CD	
30	00000A00685	1	CRISTAL DESLIZAN. L/I	SLIDING GLASS LH	VITRE GLISSANT CG	
31	00000A00687	1	CRISTAL DESLIZAN.L/D.	SLIDING GLASS RH	VITRE GLISSANT CD	
32	00000A00688	2	CONJ.PESTILLO VENTANI.	LOCK ASSY GLASS	ENS.TARGETTE FENETRE	
33	51458-00000	1	CONJ.PLACA EXT.TRAS.L/I	PLATE ASSY OUT	ENS. PLAQUE EXT. ARRIERE CG	
34	51459-00000	1	CONJ.PLACA EXT.TRAS.L/D	PLATE ASSY OUT R R	ENS. PLAQUE EXT. ARRIERE CD	
35	51817-00000	1	CONJ.PLACA EXT.DEL. L/I	PLATE ASSY OUT FR LH	ENS. PLAQUE EXT. AVANT CG	
36	51818-00000	1	CONJ.PLACA EXT.DEL. L/D	PLATE ASSY OUT FR RH	ENS. PLAQUE EXT. AVANT CD	
37	51464-00000	1	CCNJ.PLACA INT.TRAS.L/I	PLATE ASSY INNER RR LH	ENS. PLAQUE INT. ARRIERE CG	
38	51465-00000	1	CONJ.PLACA INT.TRAS.L/D	PLATE ASSY INNER RR RH	ENS. PLAQUE INT. ARRIERE CD	
39	51456-00000	1	CONJ.PLACA INT.DEL. L/I	PLATE ASSY INNER FR LH	ENS. PLAQUE INT. AVANT CG	
40	51457-00000	1	CONJ.PLACA INT.DEL. L/D	PLATE ASSY INNER FR RH	ENS. PLAQUE INT. AVANT CD	
41	51452-00000	2	JUNTA PLACA DEL.Y TECHO	GASKET	JOINT PLAQUE AVANT TOIT	
42	51454-00000	2	JUNTA PLACA TRAS.Y TECHO	GASKET	JOINT PLAQUE ARRIERE TOIT	
43	09160-06019	16	ARANDELA PLANA	WASHER	RONDELLE	
44	08321A31066	16	ARANDELA GROWER	WASHER	RONDELLE GROWER	

FIG. 87.3

K - 14

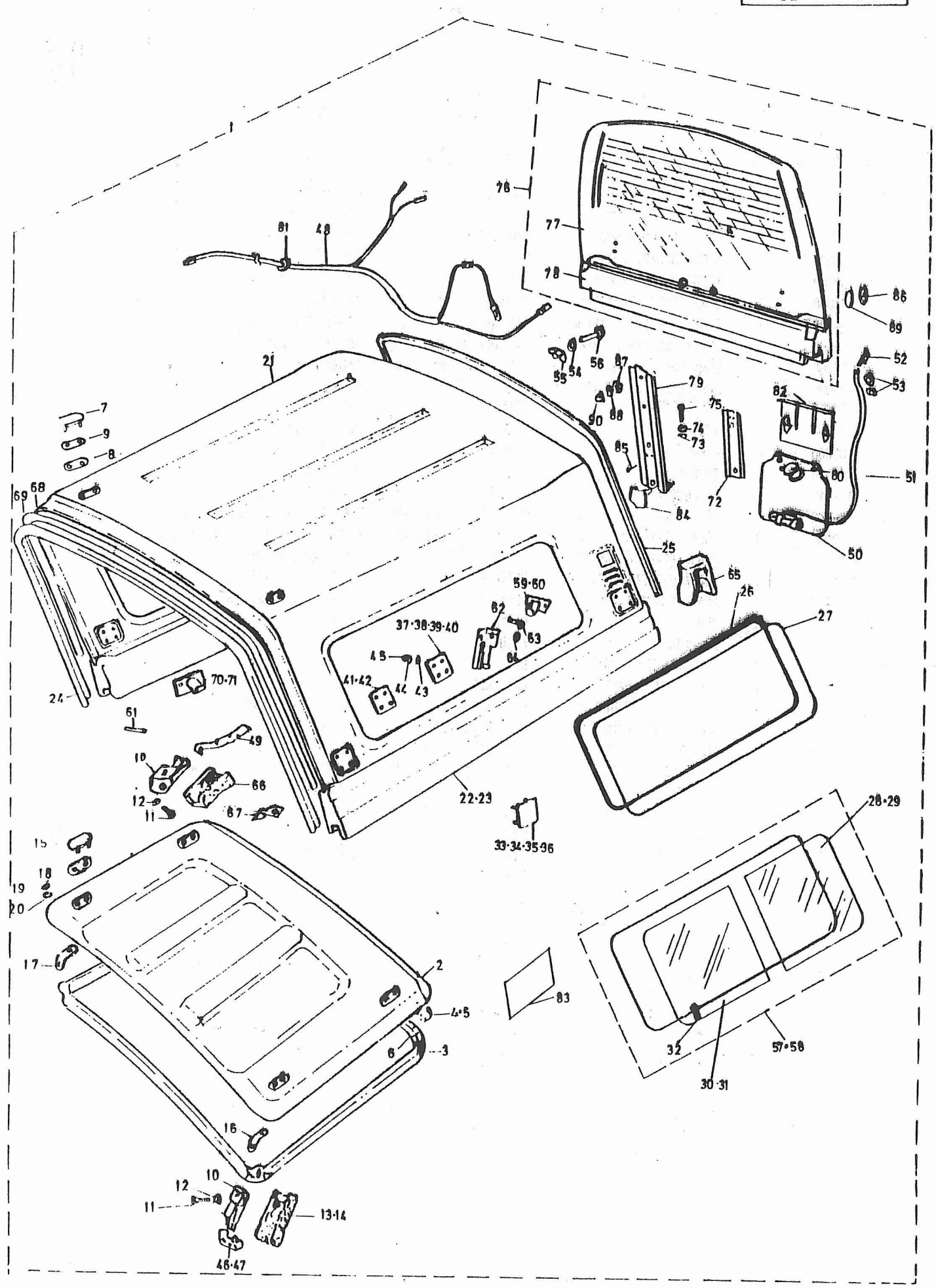

1
76
77
78
81
48
86
89
52
53
21
55
54
56
87
79
90
88
75
74
73
82
7
9
8
85
80
51
69
68
72
84
50
25
65
26
27
59·60
62
63
64
37·38·39·40
45
41·42
44
43
70·71
24
61
49
10
66
12
11
67
22·23
33·34·35·36
28·29
15
18
19
20
17
2
4·5
6
3
83
32
57·58
30·31
16
10
12
11
13·14
46·47

Nº FIG. PLATE Nº FIG.	Nº PIEZA PARTNUMBER Nº PIECE	CANT. QTY OUT	DENOMINACION	DESCRIPTION	DENOMINATION	OBSERVACIONES
45	08313B11068	16	TUERCA CAPERUZA	NUT	ECROU	
46	78335-00000	1	ENGANCHE PARABRISAS L/I	HOOK WINDSHIELD LH	CROCHET PAREBRISE CG	
47	78336-00000	1	ENGANCHE PARABRISAS L/D	HOOK WINDSHIELD RH	CROCHET PAREBRISE CD	
48	35272-00000	1	CABLEADO MOTOR LIMPI. TRAS.	WIRING REAR WIPER	CABLES MOTEUR ESSUJE-GLACE	
	35286-00000	1	CABLEADO MOTOR LIMPI. TRAS.	WIRING REAR WIPER	CABLES MOTEUR ESSUJE-GLACE	U.K.
49	51433-00000	2	ENGANCHE CIERRE RAPIDO	HOOK QUINC LOCK	CROCHET FERMETURE RAPIDO	
50	35011-00000	1	DEPOSITO LAVA-CRISTAL TRAS.	TANK REAR WIPER	RESERVOIR EAU ARRIERE	
51	35253-00000	1	TUBO LAVA-CRISTAL	PIPE WIPER	TUYAU ESSUJE-GLACE	
52	35013-00000	1	SURTIDOR	NOZZLE	GICLEUR	
53	09320-09004	3	ARANDELA JUNTA	WASHER	RONDELLE JOINT	
54	09160-06020	1	ARANDELA PLANA	WASHER	RONDELLE	
55	04002-00000	1	TUERCA MARIPOSA	NUT	ECROU	
56	00004-00000	1	TORNILLO	SREW	VIS	
57	51557-00000	1	CONJ.VENTANA CORRED: L/D.	SLIDING GLASS ASSY RH	ENS.FENETRE GLISSANT CD	
58	51558-00000	1	CONJ.VENTANA CORRED. L/I.	SLIDING GLASS ASSY LH	ENS.FENETRE GLISSANT CG	
59	78320-00000	1	CONJ.SOPORTE ENGAN.CIERRE RAPIDO L/I.	BLACKET MOOK QUICK LOCK ASSI LH	ENS.SUPPORT CROCHET FERM. RAPIDE CG	
60	78323-00000	1	CONJ.SOPORTE ENGAN.CIERRE RAPIDO L/D.	BLACKET MOOK QUICK LOCK ASSU RH	ENS.SUPPORT CROCHET FERM. RAPIDE CD	
61	51559-00000	2	PLETINA ENGANCHE TAPA CIE.R.	PLATE MOOK QUICK LOCK COVER	PLAQUE CROCHET COUV.FERM.	
62	78324-00000	4	CIERRE RAPIDO	QUICK LOCK	FERMETURE RAPIDE	
63	02112-05126	8	TORNILLO	SCREW	VIS	
64	08321A31056	8	ARANDELA GROWER	WASHER	RONDELLE CROWER	
65	51560-00000	2	TAPA CIERRE RAPIDO	COVER QUICK LOCK	COUVERCLE FERM.RAPIDE	
66	78367-00000	4	TAPA CIERRE RAPIDO	COVER QUICK LOCK	COUVERCLE FERM.RAPIDE	
67	78366-00000	4	ENGANCHE TAPA	MOOK COVER	CROCHET COUVERCLE	
68	50069-00000	1	PERFIL PROTEC.T.TRAS.	PROFIL BAR	PROFIL PROTECTEUR BARRE	
69	50066-00000	1	GOMA DELANTERA T.TRAS.	RUBBER BAR,FRONT	CAOUTCHOUT AV. BARRE	
70	51667-00000	1	CONJ.ENGA.CIER.RAP.L/D	MOOK QUICK LOCK ASSY FR RH	ENS.CROCHET FERM.RAP.AVANT CD	
71	51668-00000	1	CONJ.ENGA.CIER.RAP.L/I	MOOK QUICK LOCK ASSY FR LH	ENS.CROCHET FERM.RAP.AVANT CG	
72	51436-00000	2	CONJ.SOPOR.CRISTAL TRAS.	BRACKET REAR GLASS ASSY	ENS.SUPPORT VITRE ARRIERE	
73	08321A31066	4	A. GROWER	WASHER	RONDELLE GROWER	
74	08322-21066	4	A. PLANA	WASHER	RONDELLE	
75	01107-06166	4	TORNILLO	SCREW	VIS	
76	51442-00000	1	CONJ.CRIS.PUERTA TRAS.	GLASS REAR DOOR ASSY	ENS.VITRE PORTE ARRIERE	
77	51443-00000	1	CRISTAL	GASS	VITRE	
78	50952-00000	1	MOLDURA	MOULDING	MOULURE	
79	51434-00000	2	PLACA FIJAC.CRISTAL	PLATE FIXING GLASS	PLAQUE FIXAGE VITRE	
80	00000A00293	1	TAPON DEPOSITO	CAP TANK	BOUCHON RESERVOIR	
81	35070-00000	2	ARANDELA PASACABLES	WASHER	RONDELLE CABLES	
82	51413-00000	1	SOPORTE BOTELLA LIMPIAP.	BRACKET TANK WATER	SUPPORT BOUTEV.ESSUJE-GLACE	
83	51562-00000	2	ANAGRAMA DE TARA Y CARGA	ANAGRAM LOAD AND TARE	ANAGRAMME TARE ET CHAGE	
84	51572-00000	4	POMO FIJ.CRISTAL	KNOB GLASS	POIGNEE FIXAGA VITRE ARRIERE	
85	78362-00000	4	TORNILLO FIJ.CRISTAL	SCREW FIXING GLASS	VIS FIXAGE VITRE ARRIERE	
86	78359-00000	4	TOPE EXTERIOR	STOPPER OUT	BUTEE EXTERIEUR	
87	78361-00000	4	TOPE INTERIOR	STOPPER INNER	BUTEE INTERIEUR	
88	78360-00000	4	ARANDELA GOMA	WASHER RUBBER	RONDELLE CAOUTCHOUT	
89	09160-08075	4	ARANDELA PLANA	WASHER	RONDELLE	
90	08313B11085	4	TUERCA DE CAPERUZA	NUT	ECROU	

FIG.88

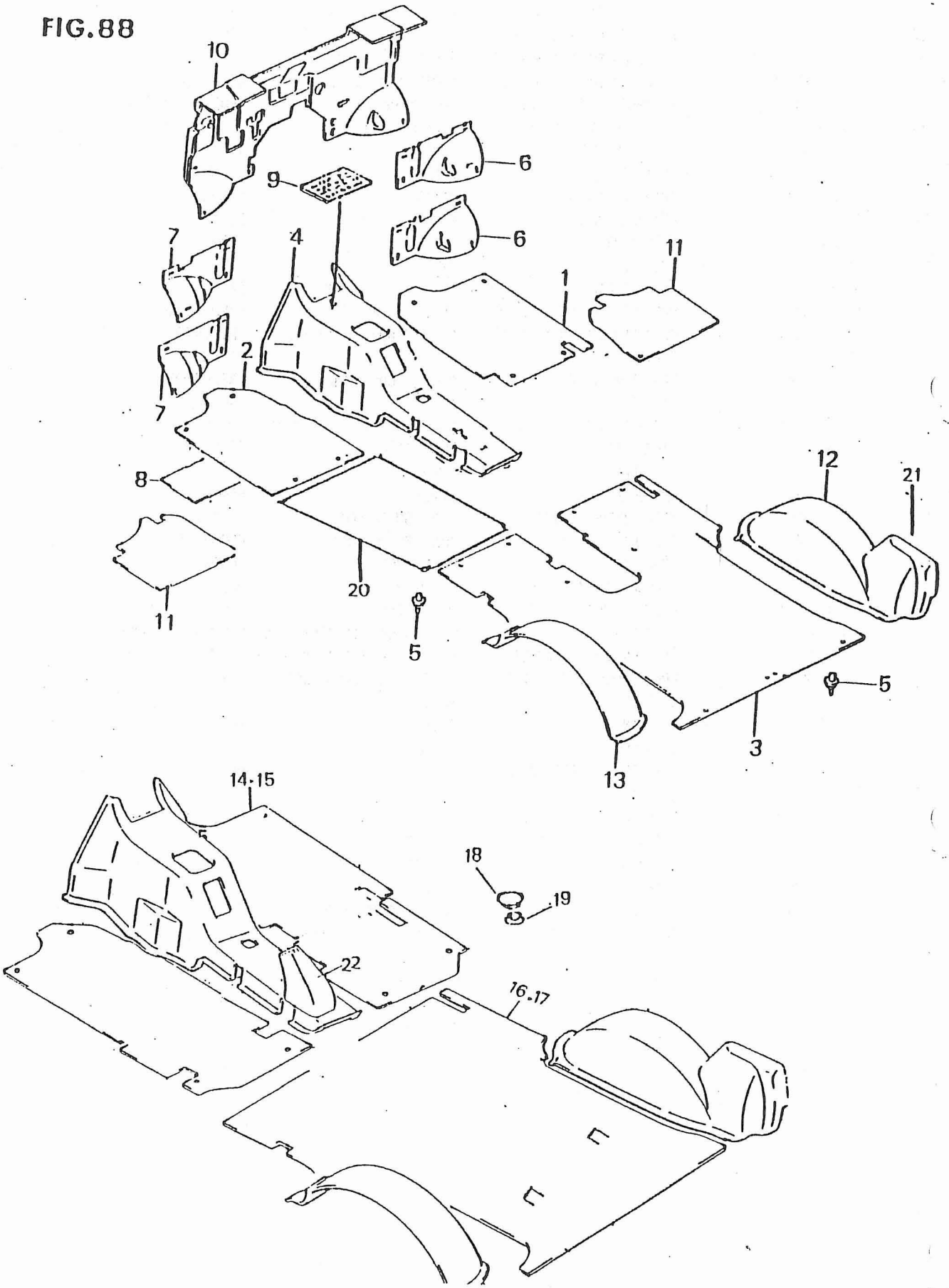

PUBLICACION N:A00523 GRUPO=CATAG SJ-413 SAMURAI SUBGRUPO=1K12MOQUETA/ESTERILL
EDICION N: 3 GROUP=CATAG S-413 SAMURAI SUBGROUP=1K12FLOOR MATT
GROUPE=CATAG SJ-413 SAMURAI SUBGROUPE=1K12MOQUET/PLANCHER

N.FIG PLATE N.FIG	N.PIEZA PARTNUMBER N.PIECE	CAN QTY OUT	DENOMINACION	DESCRIPTION	DENOMINATION	OBSERVACIONES
1	51574-00000	1	ESTER.DEL.LD GRISS	MATT FRONT RH GRAY	TAPIS.AV CD GRIS	U.K.
	51581-00000	1	ESTER.DEL LD MARRON	MATT.FRONT RH BROWN	TAPIS AV CD MARRON	U.K.
	75110B83050	1	ESTER DEL LD GRIS	MATT FRONT RH GRAY	TAPIS AV CD GRIS	
	75110C83050	1	ESTER DEL LD MARRON	MATT FRONT RH BROWN	TAPIS AV CD MARRON	
2	51576-00000	1	ESTER.DEL LI GRIS	MATT.FRONT LH GRAY.	TAPIS AV CG GRIS	U.K.
	51583-00000	1	ESTER. DEL LI MARRON	MATT.FRONT LH BROWN	TAPIS AV CG MARRON	U.K.
	75120B83030	1	ESTER DEL LI GRIS	MATT FRONT LH GRAY	TAPISC AV CG GRIS.	
	75120C83030	1	ESTER DEL LI MARRON	MATT FRONT LH BROWN	TAPIS AV CG MARRON	
3	75170A83771	1	ESTER P/TRAS GRIS	MATT REAR GRAY	TAPIS AR GRIS	LONG BODY
	75170D83680	1	ESTER PISO TRAS GRIS	MATT REAR FLOOR GRAY	TAPIS AR GRIS	
	75170E83680	1	ESTER TRAS MARRON	MATT REAR BROWN	TAPIS AR MARRON	
4	75150B83040	1	ESTER TUNEL GRIS	MATT TUNNEL GRAY	TAPIS TUNEL GRIS	
	75150C83040	1	ESTER TUNEL MARRON	MATT TUNNEL BROWN	TAPIS TUNEL MARRON	
5	09410-00067	19	FIJADOR ALFOMBRA	HOOK	CROCHET	
6	75211-83010	1	AISLANTE SALPICA LD	SILEACER DASH RH	ISOLEM PANNEAU CD	
	75211A83010	1	AISLANTE LD GRIS	SILEACER RH GRAY	ISOLEM CD GRIS	
	75211B83010	1	AISLANTE LD MARRON	SILENCER RH BROWN	ISOLEM CD MARRON	
7	75221-83010	1	AISLANTE SALPICA LI	SILEACER DASH LH	ISOLEM PANNEAU CG	
	75221A83010	1	AISLANTE LI GRIS	SILENCER LH GRAY	ISOLEM CG GRIS	
	75221B83010	1	AISLANTE LI MARRON	SILENCER LH BROWN	ISOLEM CG MARRON	
8	75231-80000	1	FORRO PISO DEL LI	PAD FRONT FLOOR LH	GARNITURE CG PLANCHE	
9	28381B83000	1	ETIQUETA USO PALANCA	ANAGRAM USE LEVER	ANAGRAMME USO LEVIER	
10	75240A83002	1	PANEL DEL. MOD-V	DASH PANEL MOD-V	PANNEAU AV MOD-V	U.K.
	75240A83011	1	PANEL DELANT MOD-V	DASH PANEL MOD-V	PANNEAU AVANT MOD-V	
11	75250-83001	1	AISLANTE FRONTAL LD	SILENCER FRONT RH	ISOLEM AV CD	
	75260-83001	1	AISLANTE FRONTAL LI	SILENCER FRONT LH	ISOLEM AV CG	
12	75530B80052	1	ESTER RUEDA LD GRIS	MATT WHEEL RH GRAY	TAPIS ROUED CD GRIS	
	75530D83002 F.U.	1	ESTER RUEDA LD MARRO	MATT WHEEL RH BROWN	TAPIS ROUE CD MARRON	
	75531A83031	1	ESTER RUEDA LD GRIS	MATT WHEEL RH GRAY	TAPIS ROUE CD GRIS	LONG BODY
13	51571-00000	1	MOQUETA LI RUEDA GRI	CARPET WHEEL LH GRAY	MOQUET ROUE CG GRIS	U.K.
	75540A83031	1	ESTER RUEDA LD GRI	MATT WHEEL RH GRAY	TAPIS ROUE CD GRIS	
	75540B80052	1	ESTER RUEDA LI GRIS	MATT WHEEL LH GRAY	ESTER ROUE CG GRIS	
	75540C83002	1	ESTER RUEDA LI MARRO	MATT WHEEL LH BROWN	ESTER ROUE CG MARRON	
14	50957-00000	1	MOQUETA DEL. MARRON	CARPET FRONT BROWN	MOQUETE AVANT MARRON	
15	50956-00000	1	MOQUETA DEL.GRIS	CARPET FRONT GRAY	MOQUETE AVANT GRIS	
16	50961-00000	1	MOQUETA TRAS MARRON	CARPET REAR BROWN	MOQUETE AR MARRON	
	51512-00000	1	MOQUETA TRAS.GRIS	CARPET REAR GRAY	MOQUETE AR. GRIS	
17	50960-00000	1	MOQUETA TRAS GRIS	CARPET REAR GRAY	MOQUETE AR GRIS	
	51513-00000	1	MOQUETA TRAS. GRIS	CARPET REAR GRAY	MOQUET AR GRIS	

FIG.88.1

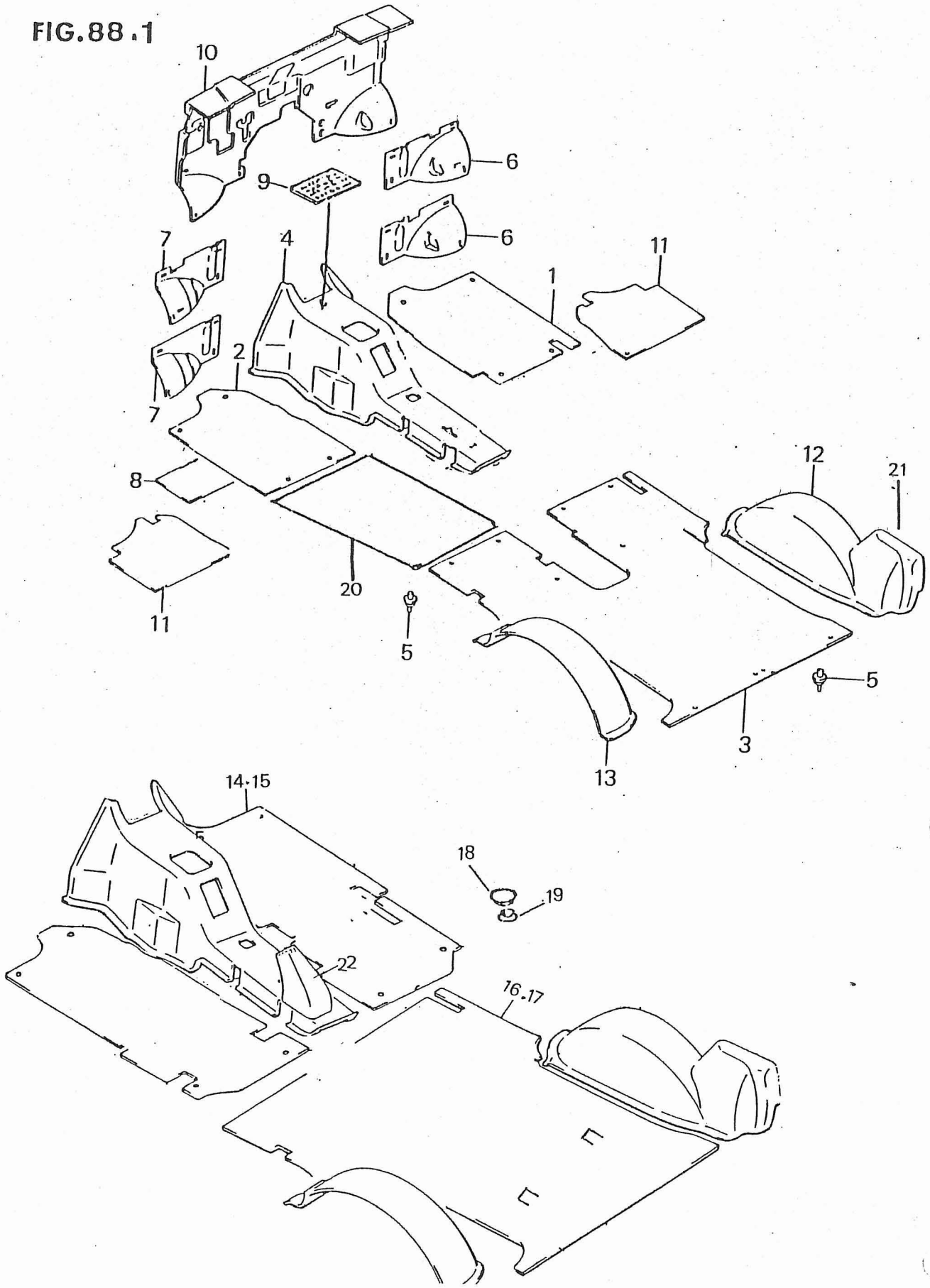

PUBLICACION N:A00523 GRUPO=CATAG SJ-413 SAMURAI SUBGRUPO=1K13ESTERILLA RUEDA
EDICION N: 3 GROUP=CATAG S-413 SAMURAI SUBGROUP=1K13MATT WHEEL
GROUPE=CATAG SJ-413 SAMURAI SUBGROUPE=1K13TAPIS ROUE

N.FIG PLATE N.FIG	N.PIEZA PARTNUMBER N.PIECE	CAN QTY OUT	DENOMINACION	DESCRIPTION	DENOMINATION	OBSERVACIONES
18	75115-80000 F.U.	14	RETENCION HEMBRA	FAMELE HOOK	RETENT.FEMELLE	
	75115A80000 F.U.	14	RETENCION GRIS	FAMELE HOOK GRAY	RETEN GRIS	
	75115B80000	14	RETENCION MARRON	FAMELE HOOK BRWON	RETENT MARRON	
19	75116-80000	14	RETENCION MACHO	FAMELE HOOK	RETENT FEMELLE	
20	75170F83680	1	ESTER INT LI GRIS	MATT INNER LH GRAY	TAPIS INT CG GRIS	
	75170G83680	1	ESTER INT LI MARRON	MATT INNER LH BROWN	TAPIS INT CG MARRON	
21	75530E83002	1	ESTER BOCA GRIS	MATT NECK FILLER GRA	TAPIS TUBER GRIS	
	75530F83002	1	ESTER BOCA MARRON	MATT NECK FIL BROWN	TAPIS TUBE MARRON	
22	75190-83010	1	GUARDAPOLVOS	BOOT	CACHE POUSSIERE	
23	51514-00000	1	MOQUETA RUEDA LD GRI	CARPET WHEEL LH GRAY	MOQUETE ROUE CG GRIS	
24	51509-00000	1	MOQUETA RUEDA LI MAR	CARPET WHEEL CG BROW	MOQUETE ROUE CG MARR	
	51516-00000	1	MOQUETA RUEDA LI GRI	CARPET WHEEL LH GRAY	MOQUETE ROUE CG GRIS	

FIG.89

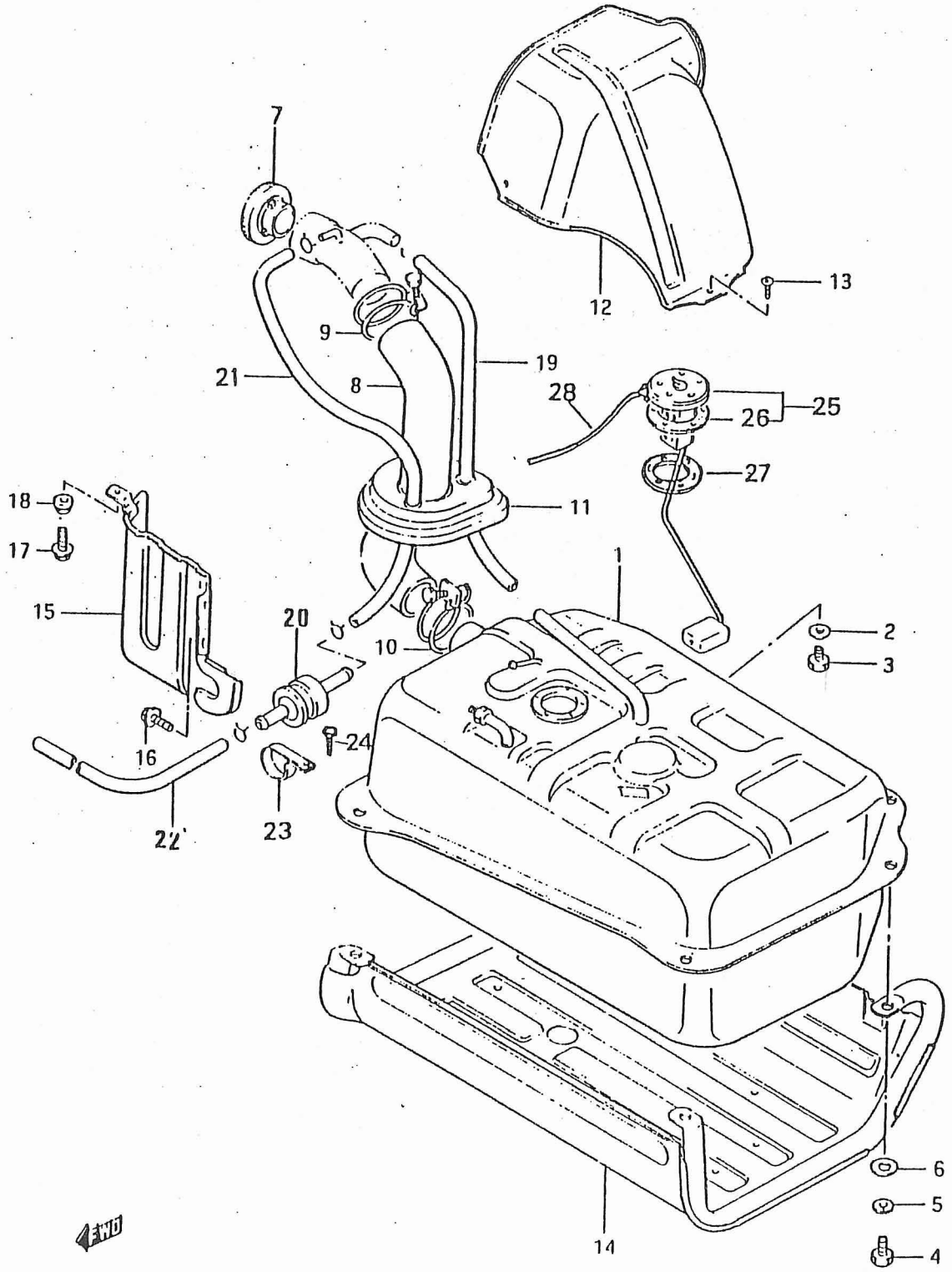
7
12
13
9
19
21
8
28
25
26
27
18
11
17
1
15
20
2
10
3
16
24
22
23
6
5
14
4
FWD

PUBLICACION N:A00523 GRUPO=CATAG SJ-413 SAMURAI SUBGRUPO=1C10DEPOSITO COMBUST
EDICION N: 3 GROUP=CATAG S-413 SAMURAI SUBGROUP=1C10TANK ASSY FUEL
GROUPE=CATAG SJ-413 SAMURAI SUBGROUPE=1C10RESERVOIR CARBU.

N.FIG PLATE N.FIG	N.PIEZA PARTNUMBER N.PIECE	CAN QTY OUT	DENOMINACION	DESCRIPTION	DENOMINATION	OBSERVACIONES
1	89101A80022	1	DEPOSITO COMBUSTIBLE	TANK ASSY FUEL	ENS RESERVOIR	
2	09168A12005	1	ARANDELA JUNTA	GASKET	JOINT	
3	09247A12101	1	TAPON	PLUG	BOUCHON	
4	01707-10306	4	TORNILLO	BOLT	VIS	
5	08321B31103	4	ARANDELA	WASHER	RONDELLE	
6	09160-10001	4	ARANDELA	WASHER	RONDELLE	
7	85410A79202	1	TAPON DEPOSITO	CAP TANK	BOUCHON RESERVOIR	H 78033
	85410B79202	1	TAPON DEPOSITO	CAP TANK	BOUCHON RESERVOIR	D 78034
8	89241A80000	1	TUBO ENTRADA COMBUS	PIPE INLET	TUYAU	
9	09400A60301	1	ABRAZADERA	CLAMP	COLLIER	
10	09400A53301	1	ABRAZADERA	CLAMP	COLLIER	
11	89281-80000	1	GUARDAPOLVOS	DUST SEAL PIPE	PARE POUSSIERE TUBE	
12	89311A80000	1	PROTECTOR TUBO	PROTECTOR PIPE	PROTECTEUR TUYAU	
	89311A80300	1	PROTECTOR TUBO	PROTECTOR PIPE	PROPECTEUR TUYAU	LOMG BODY
13	02142-06103	3	TORNILLO	SCREW	VIS	
	02142-06108	3	TORNILLO	SCREW	VIS	
14	89320A83000	1	PROTECTOR DEPOSITO	PROTECTOR TANK	PROTECTEUR RESERVOIR	
15	89312-83030	1	PROTECTOR TUBO	PROTECTOR PIPE	PROTECTUEUR	
16	01514-06106	2	TORNILLO	BOLT	VIS	
17	09103-06089	1	TORNILLO	BOLT	VIS	
18	09305-07003	1	PASACABLE	GROMMENT	PASSECABLE	
19	09343A11016	1	MANGUITO RESPIRAD	HOSE BREATHER	MANCHON	
20	85451-75100	1	VALVULA	VALVE 2 WAY	SOUPAPE 2 VOIES	
21	09344-05040	1	MANGUITO SALIDA	HOSE INLET	MANCHON SORTIE VALVE	
22	09344-05042	1	MANGUITO ENTRADA	HOSE OUTLET	MANCHON ENTREE	
23	09403A23401	1	ABRAZADERA	CLAMP	COLLIER	
24	03141-06108	1	TORNILLO	SCREW	VIS	
25	34810A80001	1	AFORADOR	GAUGE ASSY	JAUGEUR	
26	34825A67012	1	JUNTA	GASKET	JOINT	
27	34810B80001	1	ANILLO	RING	ANNEAU	
28	36822A80001	1	CABLE	CABLE	CABLE	

FIG. 90

L-04

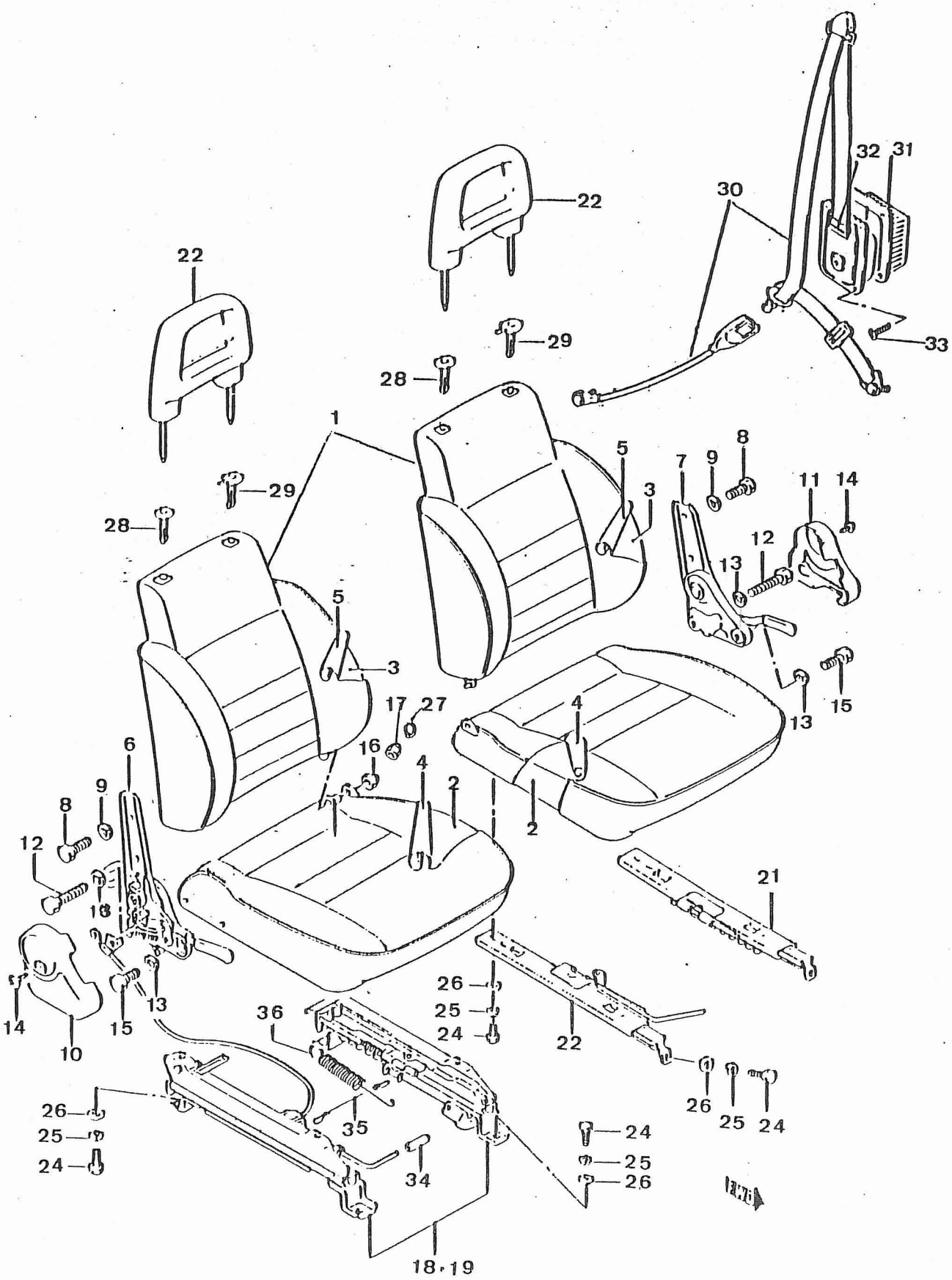
22
22
29
28
29
28
1
5
3
5
3
7
9
8
11
14
12
13
13
15
17
27
16
4
4
2
2
6
9
8
12
18
13
15
14
10
21
26
25
24
22
36
35
34
26
25
24
26
25
24
24
25
26
18·19

PUBLICACION N:A00523 GRUPO=CATAG SJ-413 SAMURAI SUBGRUPO=1L04ASIENTO DELANT.
EDICION N: 3 GROUP=CATAG S-413 SAMURAI SUBGROUP=1L04SEAT FRONT ASSY
GROUPE=CATAG SJ-413 SAMURAI SUBGROUPE=1L04SIEGE AVANT

N.FIG PLATE N.FIG	N.PIEZA PARTNUMBER N.PIECE	CAN QTY OUT	DENOMINACION	DESCRIPTION	DENOMINATION	OBSERVACIONES
1	51162-00000	1	ASIENTO LD	SEAT ASSY RH	SIEGE CD	HUELLA GRIS
	51173-00000	1	ASIENTO LI	SEAT ASSY LH	SIEGE CG	HUELLA GRIS
	51196-00000	1	ASIENTO DEL LD	SEAT ASSY RH	SIEGE CD	HUELLA MARRON
	51207-00000	1	ASIENTO DEL LI	SEAT ASSY LH	SIEGE CG	HUELLA MARRON
	85001-72A10	1	CONJ ASIENTO LD T/G	SEAT ASSY RH C/G	SIEGE CD T/G	TELA GRIS
	85001A72A10	1	CON ASIENTO LD T/M	SEAT ASSY RH C/B	SIEGE CD T/M	TELA MARRON
	85002-70A10	1	ASIENTO LI	SEAT ASSY LH	SIEGE CG	TELA GRIS
	85002A70A10	1	ASIENTO LI T/M	SEAT ASSY LH C/B	SIEGE CG T/M	TELA MARRON
2	50974-00000	1	COJIN LI T/M	CUSHION LH C/B	CUSSIN CG T/M	TELA MARRON
	50975-00000	1	COJIN LD T/M	CUSHION RH C/B	COUSSIN CD	TELA MARRON
	50976-00000	1	COJIN LI T/G	CUSHION LH C/G	COUSSIN CG	TELA GRIS
	50977-00000	1	COJIN LD T/G	CUSHION RH C/G	COUSSIN CG	TELA GRIS
	51163-00000	1	COJIN LD	CUSHION RH	COUSSIN CD	HUELLA GRIS
	51174-00000	1	COJIN LI	CUSHION LH	COUSSIN CG	HUELLA GRIS
	51197-00000	1	COJIN DEL LD	CUSHION RH	COUSSIN CD	HUELLA MARRON
	51208-00000	1	COJIN LI	CUSHION LH	COUSSIN CG	HUELLA MARRON
3	50982-00000	1	RESPALDO LI T/M	BACK ASSY LH C/B	DOSSIER CG T/M	TELA MARRON
	50983-00000	1	RESPALDO LD T/M	BACK ASSY RH C/B	DOSSIER CD T/M	TELA MARRON
	50984-00000	1	RESPALDO LI T/G	BACK ASSY LH C/G	DOSSIER CG T/G	TELA GRIS
	50985-00000	1	RESPALDO LD T/G	BACK ASSY RH C/G	DOSSIER CD T/G	TELA GRIS
	51168-00000	1	RESPALDO LD	BACK ASSY RH	DOSSIER CD	HUELLA GRIS
	51176-00000	1	RESPALDO LI	BACK ASSY LH	DOSSIER CG	HUELLA GRIS
	51202-00000	1	RESPALDO LD	BACK ASSY RH	DOSSIER CD	HUELLA MARRON
	51210-00000	1	RESPALDO LI	BACK ASSY LH	DOSSIER CG	
4	51000-00000	1	TAPIC COJIN LI T/G	TRIM CUSHION LH C/B	TAPIS COUSSIN CG	TELA GRIS
	51001-00000	1	TAPIC COJIN LD T/G	TRIM CUSHION RH C/B	TAAPIS COUSSIN CD	TELA GRIS
	51002-00000	1	TAPIC COJIN LI T/M	TRIM CUSHION LH C/B	TAPIS COUSSIN CG	TELA MARROM
	51003-00000	1	TAPIC COJIN LD T/M	TRIM CUSHION RH C/B	TAPIS COUSSIN CD	TELA MARRON
	51164-00000	1	TAPIC COJIN LD	TRIM CUSHION RH	TAPIS COUSSIN CD	HUELLA GRIS
	51175-00000	1	TAPIC COJIN LI	TRIM CUSHION LH	TAPIS COUSSIN CG	HUELLA GRIS
	51198-00000	1	TAPIC COJIN LD	TRIM CUSHION RH	TAPIS COUSSIN CD	HUELLA MARRON
	51209-00000	1	TAPIC COJIN LI	TRIM CUSHION LH	TAPIS COUSSIN CG	HUELLA MARRON

FIG. 90.1

L-05

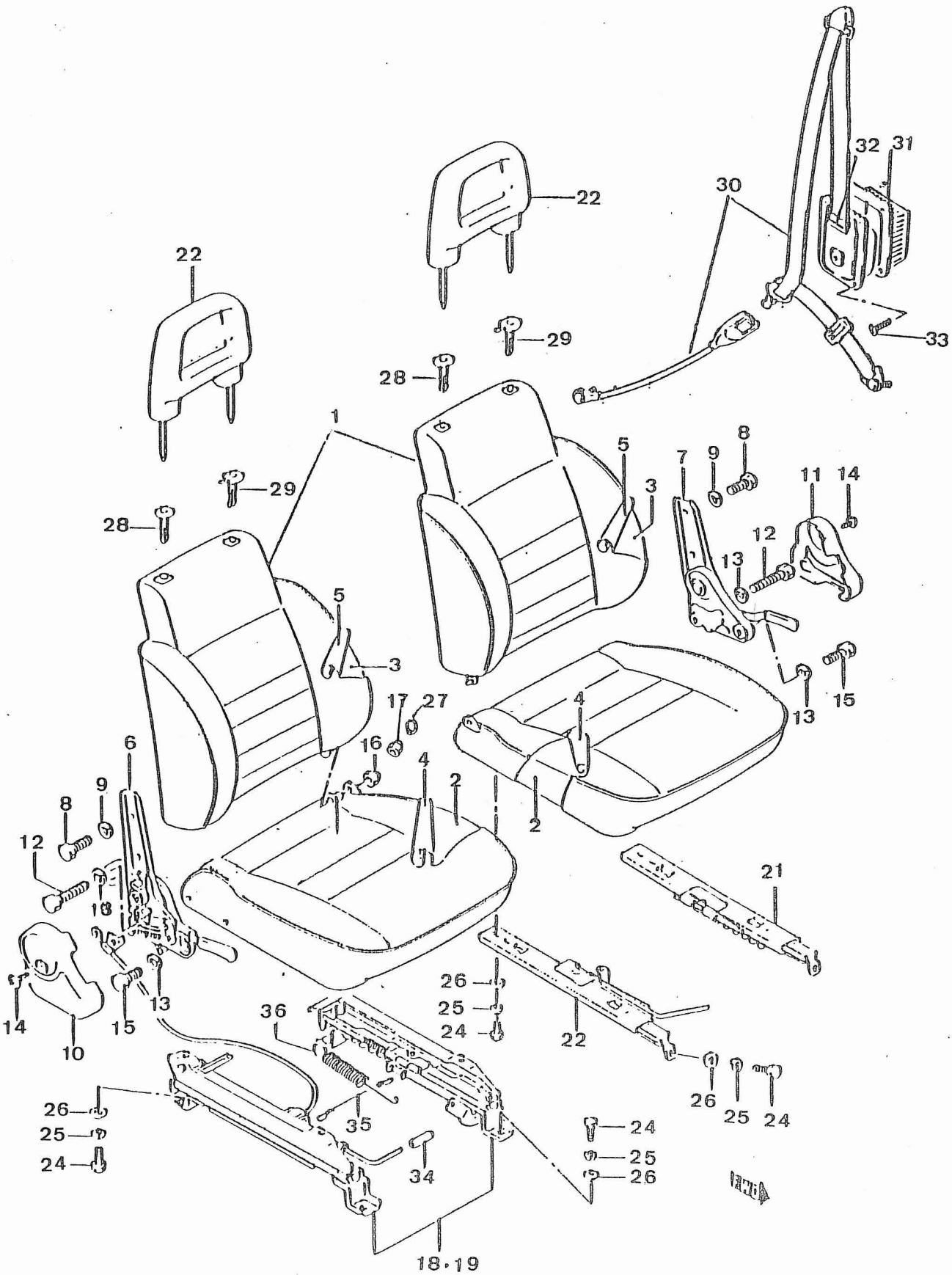
22
22
29
28
29
28
1
5
3
5
3
30
32
31
33
7
9
8
11
14
12
13
13
15
17
27
16
4
4
2
2
6
9
8
12
18
21
14
10
15
13
26
25
24
22
36
35
34
26
25
24
26
25
24
24
25
26
18·19

PUBLICACION N:A00523 GRUPO=CATAG SJ-413 SAMURAI SUBGRUPO=1L05APOYACABEZAS
EDICION N: 3 GROUP=CATAG S-413 SAMURAI SUBGROUP=1L05HEAD RESTRAIN
GROUPE=CATAG SJ-413 SAMURAI SUBGROUPE=1L05APPUI TETE

N.FIG PLATE N.FIG	N.PIEZA PARTNUMBER N.PIECE	CAN QTY OUT	DENOMINACION	DESCRIPTION	DENOMINATION	OBSERVACIONES
5	50994-00000	1	TAPIC RESPALDO LI	TRIM BACK ASSY LH	TAPIS DOSSIER CG	TELA MARRON
	50995-00000	1	TAPIC RESPALDO LD	TRIM BACK ASSY RH	TAPIS DOSSIER CD	TELA MARRON
	50996-00000	1	TAPIC RESPALDO LI	TRIM BACK ASSY LH	TAPIS DOSSIER CG	TELA GRIS
	50997-00000	1	TAPIC RESPALDO LD	TRIM BACK ASSY RH	TAPIC DOSSIER CD	TELA GRIS
	51169-00000	1	TAPIC RESPALDO LD	TRIM BACK ASSY RH	TAPIS DOSSIER CD	HUELLA GRIS
	51177-00000	1	TAPIC RESPALDO LI	TRIM BACK ASSY LH	TAPIS DOSSIER CG	HUELLA GRIS
	51203-00000	1	TAPIC RESPALDO LD	TRIM BACK ASSY RH	TAPIS DOSSIER CD	HUELLA MARRON
	51211-00000	1	TAPIC RESPALDO LI	TRIM BACK ASSY LH	TAPIS DOSSIER CG	HUELLA MARRON
6	85210-83001	1	RECLINADOR LD	RECLINING RH	RECLINATEUR CD	
7	85710-80290	1	RECLINADOR LI	RECLINING ASSY LH	RECLINATEUR CG	
8	01107-08166	4	TORNILLO SUPERIOR	BOLT UPPER	VIS SUPERIEUR	
9	08321A31086	4	ARANDELA	WASHER	RONDELLE	
10	85221A82001	1	TAPA LD	COVER RH	COUVERCLE CD	
11	85721A82001	1	TAPA LI	COVER LH	COUVERCLE CG	
12	01107-10166	2	TORNILLO	BOLT	VIS	
13	08321A31106	4	ARANDELA	WASHER	RONDELLE	
14	03241-05125	2	TORNILLO	SCREW	VIS	
15	01107-10406	2	TORNILLO	SCREW	VIS	
16	85291-80290	2	CASQUILLO NYLON	BUSH NYLON	BAGUE NYLON	
17	08313A11085	1	TUERCA	NUT	ECROU	
18	86701-83030	1	ABATIDOR ASIENTO LD	WAL-INK ASSY RH	RABATTEUR SIEGE CD	U.K.
19	86901-83030	1	ABATIDOR ASIENTO LI	WAL-INK ASSY LH	RABATTEUR SIEGE CG	
20	86602B80132	1	DESLIZADORA LI	SLIDING LG	GLISSIER CG	
21	86601B80132	1	DESLIZADORA LD	SLIDING RH	GLISSIER CD	
22	86401-70A00	2	APOYACABEZAS	REST HEAD	APPUI TETE	GRIS
	86401A70A00	2	APOYACABEZAS MARRON.	REST HEAD BROWN	APPUI TETE MARRON	
23	86736-83000	1	EMPU\ADURA	KNOB	POIGNEE	
24	01107-08166	4	TORNILLO	SCREW	VIS	
25	08321A31066	8	ARANDELA	WASHER	RONDELLE	
26	08322-21066	4	ARANDELA	WASHER	RONDELLE	
27	08322-21085	2	ARANDELA	WASHER	RONDELLE	
28	85391-80290	2	GUI APOYACAB. LD	GUIDE REST HEAD RH	GUIDE APPUI TETE CD	
29	85890-83000	2	GUIA APOYACAB LI	GUIDE REST HEAD LH	GUIDE APPUI TETE CG	
30	84901A83010	1	CINTURON DEL	BEL ASSY FRONT	ENS CEINTURON	
31	84924-80130	2	CUBIERTA CINTURON	COVER FRON BELT	COUV. CEINTURON	
32	84901E80133	2	PROTECTOR CUBIERTA	COVER PROTECTOR	PROTECTEUR COUVEC.	
33	02142-06125	8	TORNILLO	SCREW	VIS	
34	86736-83000	1	FUNDA	PAD	COUVERCLE	
35	86731-83000	1	TIRANTE	ROD	TIRANT	
36	86732-83030	1	MUELLE	SPRING	RESSORT	

L - 06

FIG. 91

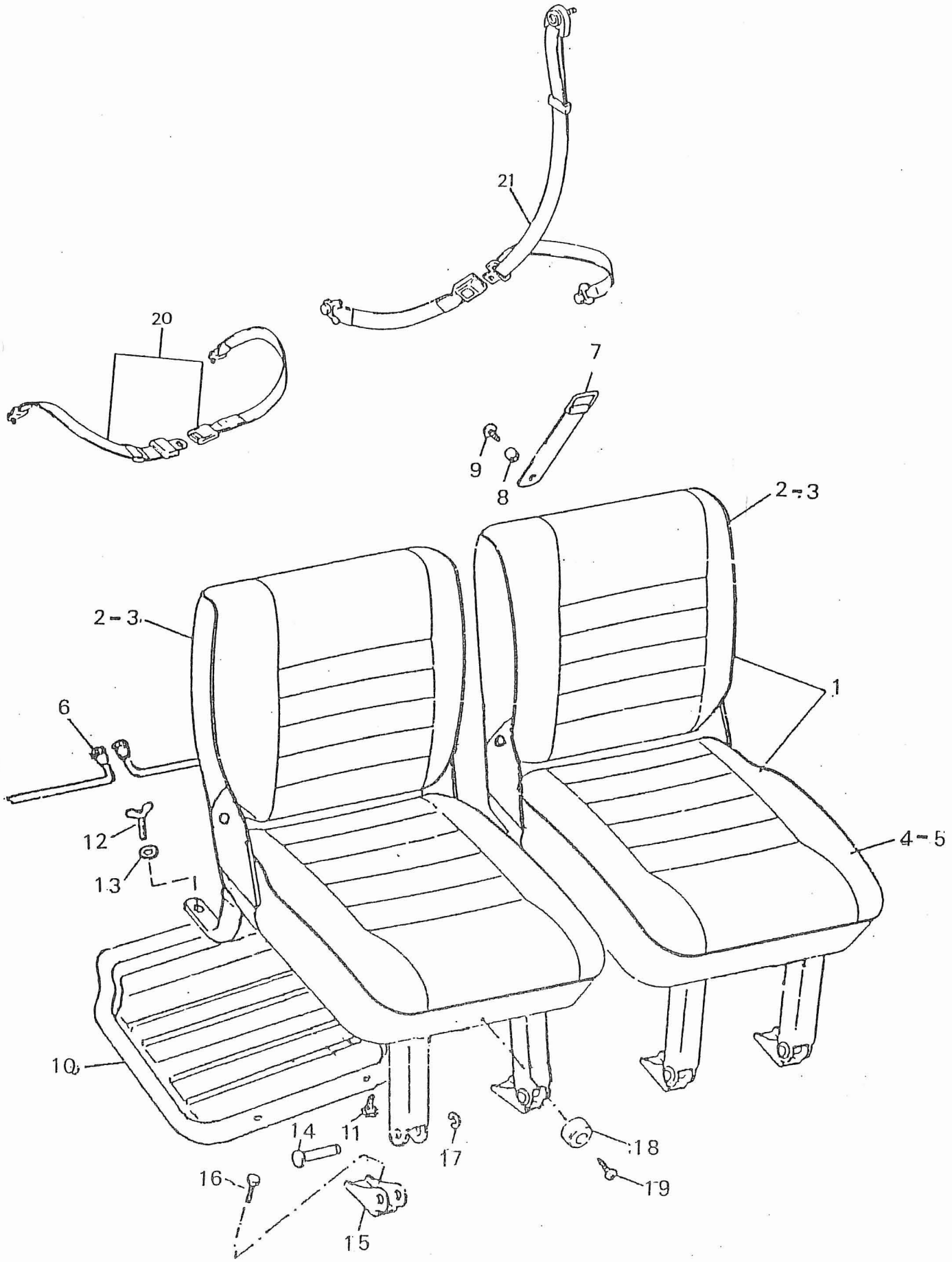

PUBLICACION N:A00523 GRUPO=CATAG SJ-413 SAMURAI SUBGRUPO=1L06ASIENTO TRASERO
EDICION N: 3 GROUP=CATAG S-413 SAMURAI SUBGROUP=1L06REAR SEAT ASSY
GROUPE=CATAG SJ-413 SAMURAI SUBGROUPE=1L06SIEGE ARRIERE

N.FIG PLATE N.FIG	N.PIEZA PARTNUMBER N.PIECE	CAN QTY OUT	DENOMINACION	DESCRIPTION	DENOMINATION	OBSERVACIONES
1	51033-00000	1	ASIENTO LD T/G	SEAT ASSY RH C/G	SIEGE CD T/G	TELA GRIS
	51034-00000	1	ASIENTO LI T/G	SEAT ASSY LH C/G	SIEGE CG T/G	TELA GRIS
	51035-00000	1	ASIENTO LD T/M	SEAT ASSY RH C/B	SIEGE CD T/M	TELA MARRON
	51036-00000	1	ASIENTO LI T/M	SEAT ASSY LH C/B	SIEGE CG T/M	TELA MARRON
	51178-00000	1	C/ASIENTO LD	SEAT ASSY RH	ENS SIEGE CD	HUELLA GRIS
	51185-00000	1	C/ASIENTO LI	SEAT ASSY LH	ENS SIEGE CG	HUELLA GRIS
	51212-00000	1	C/ASIENTO LD	SEAT ASSY RH	ENS SIEGE CD	HUELLA MARRON
	51219-00000	1	C/ASIENTO LI	SEAT ASSY LH	ENS SIEGE CG	HUELLA MARRON
2	51039-00000	1	RESPALDO LD T/G	BACK ASSY RH C/G	DOSSIER CD T/G	TELA GRIS
	51040-00000	1	RESPALDO LI T/G	BACK ASSY LH C/G	DOSSIER CG T/G	TELA GRIS
	51041-00000	1	RESPALDO LD T/M	BACK ASSY RH C/B	DOSSIER CD T/M	TELA MARRON
	51042-00000	1	RESPALDO LI T/M	BACK ASSY LH C/B	DOSSIER CG T/M	TELA MARRON
	51179-00000	1	RESPALDO LD	BACK ASSY RH	DOSSIER CD	HUELLA GRIS
	51186-00000	1	RESPALDO LI	BACK ASSY LH	DOSSIER CG	HUELLA GRIS
	51213-00000	1	RESPALDO LD	BACK ASSY RH	DOSSIER CD	HUELLA MARRON
	51220-00000	1	RESPALDO LI	BACK ASSY LH	DOSSIER CG	HUELLA MARRON
3	51044-00000	1	TAPIC RESP D-I T/G	MAT BACK R-L C/G	TAPIS DOSS D-G T/G	TELA GRIS
	51045-00000	1	TAPIC RESP D-I T/M	MAT BACK R-L C/B	TAPIS DOSS D-G T/M	TELA MARRON
	51180-00000	2	TAPIC RESPALDO D-I	TRIM BACK R-L	TAPIS DOSSIER D-G	HUELLA GRIS
	51214-00000	2	TAPIC RESPALDO D-I	TRIM BACK R-H	TAPIS DOSSIER D-G	HUELLA MARRON
4	51051-00000	1	COJIN LD T/G	CUSHION RH C/G	COUSSIN CD	TELA GRIS
	51052-00000	1	COJIN LI T/G	CUSHION LH C/G	COUSSIN CG	TELA GRIS
	51053-00000	1	COJIN LD T/M	CUSHION RH C/B	COUSSIN CD	TELA MARRON
	51054-00000	1	COJIN LI T/M	CUSHION LH C/B	COUSSIN CG	TELA MARRON
	51182-00000	1	COJIN LD	CUSHION ASSY RH	COUSSIN CD	HUELLA GRIS.
	51187-00000	1	COJIN LI	CUSHION ASSY LH	COUSSIN CG	HUELLA GRIS
	51216-00000	1	COJIN LD	CUSHION ASSY RH	COUSSIN CD	HUELLA MARRON
	51221-00000	1	COJIN LI	CUSHION ASSY LH	COUSSIN CG	HUELLA MARRON
5	51057-00000	1	TAPIC COJIN LD	MATT CUSHION LH	TAPIS COUSSIN CG	TELA GRIS
	51058-00000	1	TAPIC COJIN LI	MATT CUSHION LH	TAPIC COUSSIN CG	TELA GRIS
	51059-00000	1	TAPIC COJIN LD	MATT CUSHION RH	TAPIS COUSSIN CD	TELA MARRON
	51060-00000	1	TAPIC COJIN LI	MATT CUSHION LH	TAPIS COUSSIN CG	TELA MARRON
	51183-00000	2	TAPIC COJIN D-I	TRIM CUSHION R-L	TAPIS COUSSIN D-G	HUELLA GRIS
	51217-00000	2	TAPIC COJIN D-I	TRIM CUSHION R-L	TAPIS COUSSIN D-G	HUELLA MARRON
6	87301P80650	2	POMO	KNOB	POIGNNE	
7	50685-00000	1	CORREA MOD J	BELT MDO J	COURROIE MDO J	
	50686-00000	1	CORREA MOD V	BELT MDO V	COURROIE MOD V	
8	87001F83300	1	POMO RETENCION	STOPPER BELT	RETENTION COURROIE	
9	03111-04255	1	TORNILLO	SCREW	VIS	
10	87001B83300	1	FORRO EXT COJIN LD	COVER OUTER RH	COUVE. COUSSIN CD	
	87002B83300	1	FORRO EXT COJIN LI	COVER OUTER LH	COUVE. COUSSIN CG	
11	78248	5	REMACHE	RIVET	RIVET	
12	09119A06007	4	TORNILLO MARIPOSA	BATTERFLY BOLT	VIS PAPILLON	

L - 07

FIG. 91.1

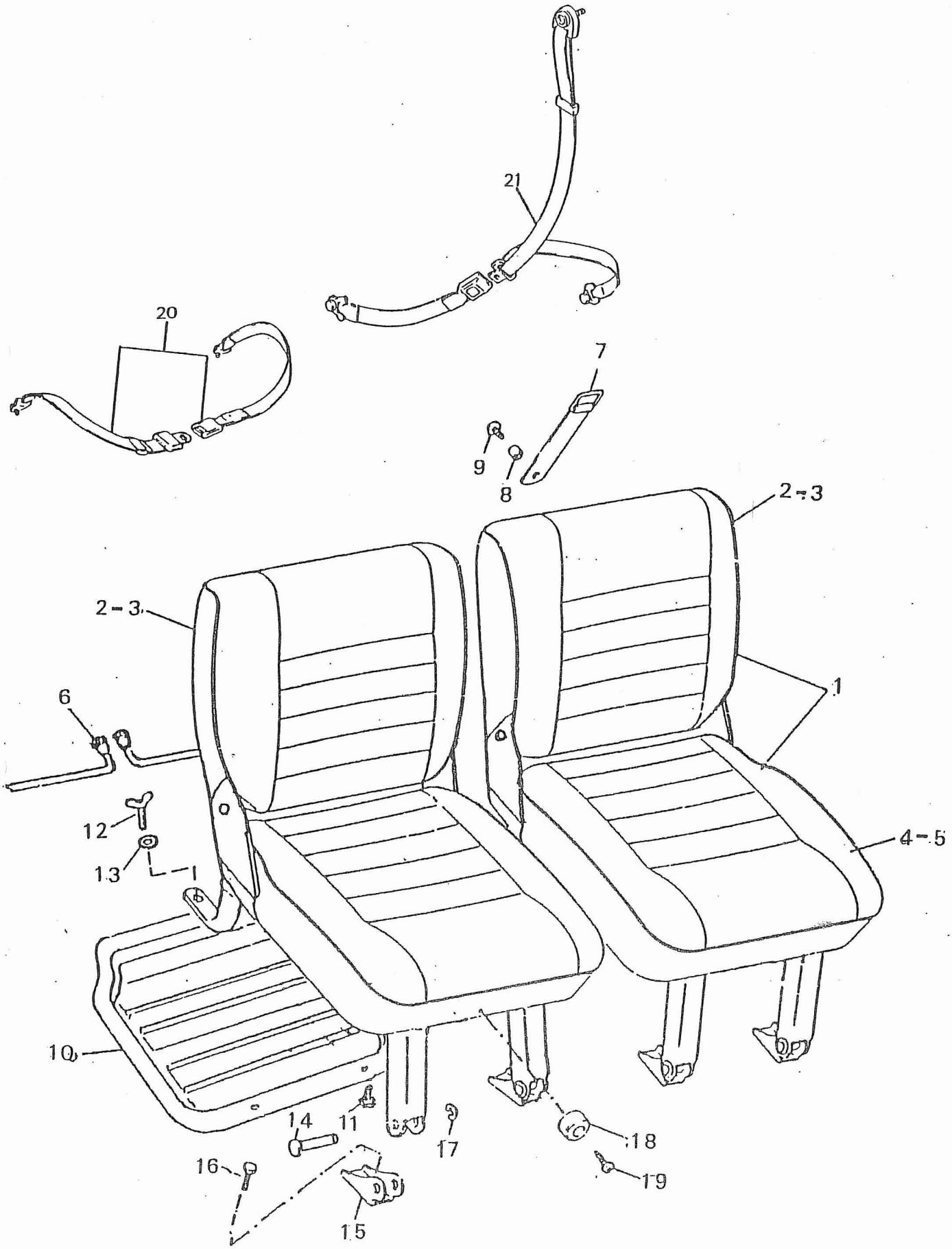

PUBLICACION N:A00523 GRUPO=CATAG SJ-413 SAMURAI SUBGRUPO=1L07TAPIC COJIN
EDICION N: 3 GROUP=CATAG S-413 SAMURAI SUBGROUP=1L07TRIM CUSHION
GROUPE=CATAG SJ-413 SAMURAI SUBGROUPE=1L07TAPIS COUSSIN

N.FIG PLATE N.FIG	N.PIEZA PARTNUMBER N.PIECE	CAN QTY OUT	DENOMINACION	DESCRIPTION	DENOMINATION	OBSERVACIONES
13	09160-06020	4	ARANDELA	WASHER	RONDELLE	
14	09208A06001	4	PASADOR	PIN	AXE	
15	87271A80121	4	BISAGRA	HINGE	CHARNIERE	
16	01514-08166	4	TORNILLO	BOLT	VIS	
17	08332A11058	4	CIRCLIP	CIRCLIP	CIRCLIP	
18	09320-06006	2	TOPE	BUSH	BUTEE	
20	84904A80132	2	CINTURON TRASERO	REAR BELL	CEINTURON ARRIERE	
21	50051-00000	2	CINTURON 3 ANCLAJES	REAR BELT 3 POINT	CEINTURON AR 3 POINT	

FIG 92

L - 08

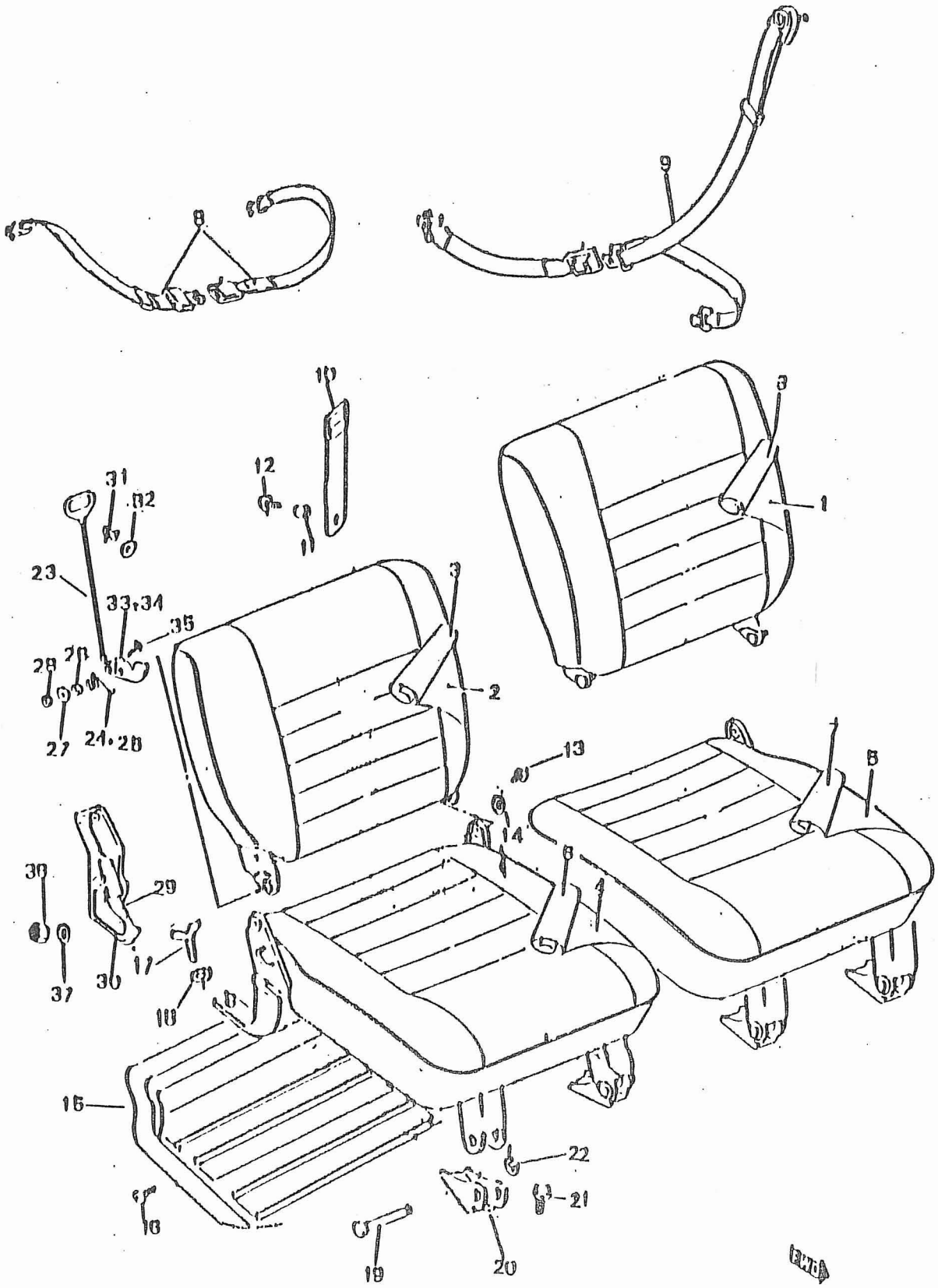

8
9
10
12
31
32
23
33,34
35
28
27
24,26
3
2
1
13
14
5
6
4
29
30
37
17
18
15
22
21
20
19
16

PUBLICACION N:A00523 GRUPO=CATAG SJ-413 SAMURAI SUBGRUPO=1L08ASIENTO TRASERO
EDICION N: 3 GROUP=CATAG S-413 SAMURAI SUBGROUP=1L08REAR SEAT ASSY
GROUPE=CATAG SJ-413 SAMURAI SUBGROUPE=1L08SIEGE ARRIERE

N.FIG PLATE N.FIG	N.PIEZA PARTNUMBER N.PIECE	CAN QTY OUT	DENOMINACION	DESCRIPTION	DENOMINATION	OBSERVACIONES
	51236-00000	1	C/ASIENTO LD	SEAT ASSY RH	ENS SIEGE CD	HUELLA MARRON
	51237-00000	1	C/ASIENTO LD	SEAT ASSY RH	ENS SIEGE CD	HUELLA GRIS
	51244-00000	1	C/ASIENTO LD	SEAT ASSY RH	ENS SIEGE CD	TELA MARRON
	51245-00000	1	C/ASIENTO LD	SEAT ASSY RH	ENS SIEGE CD	TELA GRIS
	51250-00000	1	C/ASIENTO LI	SEAT ASSY LH	ENS SIEGE CG	HUELLA MARRON
	51251-00000	1	C/ASIENTO LI	SEAT ASSY LH	ENS SIEGE CG	HUELLA GRIS
	51258-00000	1	C/ASIENTO LI	SEAT ASSY LH	ENS SIEGE CG	TELA MARRON
	51259-00000	1	C/ASIENTO LI	SEAT ASSY LH	ENS SIEGE CG	TELA GRIS
1	51278-00000	1	RESPALDO LI	BACK ASSY LH	DOSSIER CG	HUELLA MARRON
	51279-00000	1	RESPALDO LI	BACK ASSY LH	DOSSIER CG	HUELLA GRIS
	51286-00000	1	RESPALDO LI	BACK ASSY LH	DOSSIER CG	TELA MARRON
	51287-00000	1	RESPALDO LI	BACK ASSY LH	DOSSIER CG	TELA GRIS
2	51264-00000	1	RESPALDO LD	BACK ASSY RH	DOSSIER CD	HUELLA MARRON
	51265-00000	1	RESPALDO LD	BACK ASSY RH	DOSSIER CD	HUELLA GRIS
	51272-00000	1	RESPALDO LD	BACK ASSY RH	DOSSIER CD	TELA MARRON
	51273-00000	1	RESPALDO LD	BACK ASSY RH	DOSSIER CD	TELA GRIS
3	51292-00000	1	TAPIC RESPALDO LD	TRIM BACK RH	TAPIS DOSSIER CD	HUELLA MARRON
	51293-00000	1	TAPIC RESPALDO LD	TRIM BACK RH	TAPIS DOSSIER CD	TELA GRIS
	51300-00000	1	TAPIC RESPALDO LD	TRIM BACK RH	TAPIS DOSSIER CD	TELA MARRON
	51301-00000	1	TAPIC RESPALDO LD	TRIM BACK RH	TAPIS DOSSIER CD	TELA GRIS
	51306-00000	1	TAPIC RESPALDO LI	TRIM BACK LH	TAPIS DOSSIER CG	HUELLA MARRON
	51307-00000	1	TAPIC RESPALDO LI	TRIM BACK LH	TAPIS DOSSIER CG	HUELLA GRIS
	51314-00000	1	TAPIC RESPALDO LI	TRIM BACK LH	TAPIS DOSSIER CG	TELA MARRON
	51315-00000	1	TAPIC RESPALDO LI	TRIM BACK LH	TAPIS DOSSIER CG	TELA GRIS
4	51348-00000	1	COJIN LD	CUSHION ASSY RH	COUSSIN CD	HUELLA MARRON
	51349-00000	1	COJIN LD	CUSHION RH	COUSSIN CD	HUELL GRIS
	51356-00000	1	COJIN LD	CUSHION ASSY RH	COUSSIN CD	TELA MARRON
	51357-00000	1	COJIN LD	CUSHION ASSY RH	COUSSIN CD	TELA GRIS
5	51362-00000	1	COJIN LI	CUSHION ASSY LH	COUSSIN CG	HUELLA MARRON
	51363-00000	1	COJIN LI	CUSHION ASSY LH	COUSSIN CG	HUELLA GRIS
	51370-00000	1	COJIN LD	CUSHION ASSY RH	COUSSIN CD	TELA MARRON
	51371-00000	1	COJIN LI	CUSHION ASSY LH	COUSSIN CG	TELA GRIS
6	51057-00000	1	TAPIC COJIN LD	TRIM CUSHION LH	TAPIS COUSSIN CG	TELA GRIS
	51059-00000	1	TAPIC COJIN LD	TRIM CUSHION LH	TAPIS COUSSIN CG	TELA MARRON
	51183-00000	1	TAPIC COJIN LD	TRIM CUSHION LH	TAPIC COUSSIN CG	HUELLA GRIS
	51227-00000	1	TAPIC COJIN LD	TRIM CUSHION RH	TAPIS COUSSIN CD	HUELLA MARRON
7	51058-00000	1	TAPIC COJIN LI	TRIM CUSHION LH	TAPIS COUSSIN CG	TELA GRIS
	51060-00000	1	TAPIC COJIN LI	TRIM CUSHION LH	TAPIS COUSSIN CG	TELA MARRON
	51188-00000	1	TAPIC COJIN LI	TRIM CUSHION LH	TAPIS COUSSIN CG	HUELLA GRIS
	51222-00000	1	TAPIC COJIN LI	TRIM CUSHION LH	TAPIS COUSSIN CG	HUELLA MARRON

FIG.92.1

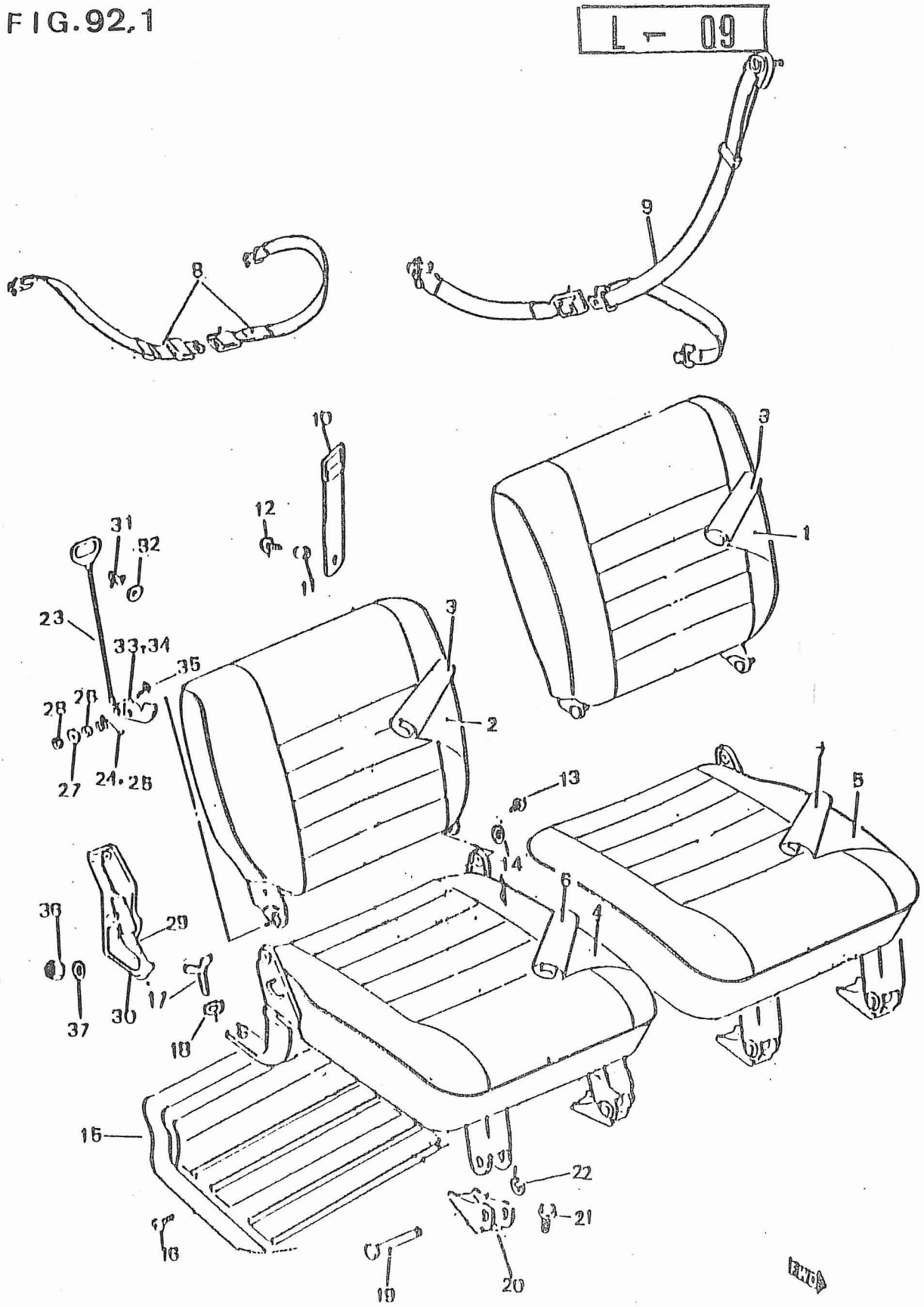
L - 09
1
2
3
4
5
6
8
9
10
11
12
13
14
15
16
17
18
19
20
21
22
23
24·25
26
27
28
29
30
31
32
33·34
35
36
37

PUBLICACION N:A00523 GRUPO=CATAG SJ-413 SAMURAI SUBGRUPO=1L09CINTURONES
EDICION N: 3 GROUP=CATAG S-413 SAMURAI SUBGROUP=1L09BELTS
GROUPE=CATAG SJ-413 SAMURAI SUBGROUPE=1L09CEINTURES

N.FIG PLATE N.FIG	N.PIEZA PARTNUMBER N.PIECE	CAN QTY OUT	DENOMINACION	DESCRIPTION	DENOMINATION	OBSERVACIONES
8	84904A80132	1	CINTURON TRASERO	REAR BELT	CEINTURE ARRIERE	
9	50051-00000	1	CINTURON 3 ANCLAJES	BELT 3 POINT	CEINTURE 3 POINT	
10	50685-00000	1	CORREA MOD J	BELT MDO J	COURROIE MOD J	
	50686-00000	1	CORREA MOD V	BELT MOD V	COURROIE MOD V	
11	87001F83300	2	CASQUILLO	BUSH	BAGUE	
12	03111-04255	2	TORNILLO	SCREW	VIS	
13	06003-00000	2	REMACHE	RIVET	RIVE	
14	09160-06064	2	A.PLANA	WASHER	RONDELLE	
15	87001B83300	1	FORRO COJIN LD	LINING CUSHION RH	GUARNITURE COUSSIN C	
	87002B83300	1	FORRO COJIN LI	LINING CUSHION LH	GUARNITURE COUSSIN C	
16	78248	6	REMACHE	RIVET	RIVE	
17	09119A06007	4	TORNILLO MARIPOSA	BATTERFLY BOLT	VIS PAPILLON	
18	09160-06020	4	ARANDELA	WASHER	RONDELLE	
19	09208A06001	4	PASADOR	PIN	AXE	
20	87110D83300	4	BISAGRA HEMBRA	HINGE	CHARNIERE	
21	01517-08166	4	TORNILLO	SCREW	VIS	
22	08332A11058	4	CIRCLIP	CIRCLIP	CIRCLIP	
23	87214-83000	2	TIRADOR PALANCA	PUSH LEVER	TENDEUR LEVEIR	
24	83914-73062	1	MUELLE	SPRING	RESSORT	
25	83944-73062	1	MUELLE LI	SPRING LH	RESSORT CG	
26	87325-83000	2	CASQUILLO	BUSH	BAGUE	
27	08322-21086	2	ARANDELA	WASHER	RONDELLE	
28	08310-22086	2	TUERCA	NUT	ECROU	
29	51565-00000	1	TAPA LD	COVER RH	COUVERCLE CD	
	51568-00000	1	TAPA LD GRIS	COVER RH GRAY	COUVERCLE CD GRIS	
30	51566-00000	1	TAPA LI	COVER LH	COUVERCLE CG	
	51567-00000	1	TAPA LI GRIS	COVER LH GRAY	COUVERCLE CG GRIS	
31	09403-06403	2	CLIP	CLIP	CLIP	
32	87328-83000	2	ARANDELA	WASHER	RONDELLE	
33	87212-80200	1	PALANCA LI	LEVER LH	LEVIER CG	
34	87612-80200	1	PALANCA LD	LEVER RH	LEVIER CG	
35	51086-00000	2	REMACHE	RIVET	RIVE	
36	08313B11063	2	TUERCA	NUT	ECROU	
37	08322-21066	2	ARANDELA	WASHER	RONDELLE	

I N D I C E N U M E R I C O

****

NUM. DE PIEZA	PAGIN	NUM. DE PIEZA	PAGIN	NUM. DE PIEZA	PAGIN	NUM. DE PIEZA	PAGIN
00000A00013	19	00000A00324	36	00000A00499	37	01107-08206	61
00000A00014	19	00000A00325	36	00000A00502	37	01107-08206 **	62
00000A00015	19	00000A00326	36	00000A00503	37	01107-08253	14
00000A00062	37	00000A00327	36	00000A00504	37	01107-08253	29
00000A00075	46	00000A00330	48	00000A00508	37	01107-08253	36
00000A00096	42	00000A00331	48	00000A00509	37	01107-08253	37
00000A00097	43	00000A00332	48	00000A00515	78	01107-08253	38
00000A00098	43	00000A00333	48	00000A00529	66	01107-08256	15
00000A00099	43	00000A00334	48	00000A00531	66	01107-08256	52
00000A00100	43	00000A00335	48	00000A00532	66	01107-08256	58
00000A00101	43	00000A00336	48	00000A00534	66	01107-08303	5
00000A00102	43	00000A00337	48	00000A00535	66	01107-08303	14
00000A00103	44	00000A00338	48	00000A00540	41	01107-08303	34
00000A00104	44	00000A00339	48	00000A00541	41	01107-08303	34
00000A00105	44	00000A00340	48	00000A00542	41	01107-08303	59
00000A00106	44	00000A00341	48	00000A00543	41	01107-08303	60
00000A00107	44	00000A00342	49	00000A00544	41	01107-08353	34
00000A00108	44	00000A00343	49	00000A00545	41	01107-08356	14
00000A00109	44	00000A00344	49	00000A00546	41	01107-08403	34
00000A00110	44	00000A00345	49	00000A00547	41	01107-08403	34
00000A00111	44	00000A00346	49	00000A00563	78	01107-08453	34
00000A00122	58	00000A00347	49	00000A00564	78	01107-08803	34
00000A00123	58	00000A00348	49	00000A00565	90	01107-10166	106
00000A00127	59	00000A00349	49	00000A00566	90	01107-10203	68
00000A00129	59	00000A00350	49	00000A00567	90	01107-10303	5
00000A00148	43	00000A00351	49	00000A00635	41	01107-10406	106
00000A00149	44	00000A00352	49	00000A00653	78	01107-12703	59
00000A00150	44	00000A00353	49	00000A00661	41	01107-12703	60
00000A00153	65	00000A00365	97	00000A00663	78	01107-12903	59
00000A00154	65	00000A00382	78	00000A00674	99	01107-12903	60
00000A00157	66	00000A00383	78	00000A00675	99	01117-08203	36
00000A00158	66	00000A00384	78	00000A00676	99	01117-08203	37
00000A00160	66	00000A00386	78	00000A00680	90	01117-08203	38
00000A00211	98	00000A00387	78	00000A00681	90	01411-06123	4
00000A00212	98	00000A00388	78	00004-00000	48	01411-06123	14
00000A00234	66	00000A00424	38	00009-00000	13	01411-06206	18
00000A00235	66	00000A00425	38	00010-00000	16	01411-08253	14
00000A00236	65	00000A00426	38	00011-00000	16	01421-06203	18
00000A00236	66	00000A00427	38	01104-06128	70	01421-08253	9
00000A00237	66	00000A00428	38	01104-06166	44	01421-08253	16
00000A00239	66	00000A00429	38	01104-06166	47	01421-10353	25
00000A00241	66	00000A00430	38	01104-06166	64	01421-10453	25
00000A00242	66	00000A00431	38	01104-06168	72	01514-06103	3
00000A00243	42	00000A00432	38	01104-06203	67	01514-06103	9
00000A00256	56	00000A00433	38	01104-08126	25	01514-06103	9
00000A00257	58	00000A00434	38	01104-08126	29	01514-06103	13
00000A00260	58	00000A00435	38	01104-08126	45	01514-06103	14
00000A00261	58	00000A00444	35	01104-08163	31	01514-06103	19
00000A00262	58	00000A00445	35	01104-08163	50	01514-06103	19
00000A00281	47	00000A00446	35	01104-08166	68	01514-06103	20
00000A00282	47	00000A00447	35	01104-08303	20	01514-06106	104
00000A00283	63	00000A00451	35	01104-10203	97	01514-06123	20
00000A00291	65	00000A00452	35	01104-12303	69	01514-06123	27
00000A00291	66	00000A00453	35	01104-12553	59	01514-06123	80
00000A00292	47	00000A00456	35	01104-12553	60	01514-06123	81
00000A00292	101	00000A00457	35	01107-06166	64	01514-06163	13
00000A00293	95	00000A00458	35	01107-06166	101	01514-06163	27
00000A00294	95	00000A00459	35	01107-06203	20	01514-06166	78
00000A00~~295~~689	93	00000A00461	78	01107-06203	21	01514-06803	2
00000A00297	46	00000A00466	63	01107-06206	8	01514-08123	70
00000A00314	36	00000A00467	63	01107-06206	64	01514-08166	108
00000A00315	36	00000A00472	42	01107-08163	5	01514-08203	27
00000A00316	36	00000A00478	63	01107-08163	22	01514-08353	15
00000A00317	36	00000A00479	63	01107-08166	106	01514-08353	22
00000A00318	36	00000A00484	42	01107-08166	106	01517-06103	14
00000A00319	36	00000A00485	42	01107-08203	5	01517-06126	4
00000A00320	36	00000A00487	48	01107-08203	36	01517-06126	4
00000A00321	36	00000A00494	37	01107-08203	37	01517-06166	8
00000A00322	36	00000A00497	37	01107-08203	51	01517-06166	64
00000A00323	36	00000A00498	37	01107-08206	52	01517-06203	6

I N D I C E N U M E R I C O

****

HOJA 02

NUM. DE PIEZA		PAGIN	NUM. DE PIEZA	PAGIN	NUM. DE PIEZA	PAGIN	NUM. DE PIEZA		PAGIN
01517-06203		6	02142-05085	88	03241-05165	75	08310-11103		53
01517-06203		8	02142-05128	73	03241-05205	75	08310-11103		59
01517-06203		12	02142-05168	73	03241-06103	68	08310-11103		60
01517-06256		2	02142-05168	88	03241-06126	20	08310-11123		50
01517-06256		6	02142-06103	98	03241-06126	74	08310-11123		50
01517-06256		17	02142-06103	98	03241-06128	70	08310-11123		50
01517-06303		14	02142-06103	99	03242-05165	75	08310-11123		53
01517-06353		17	02142-06103	104	03541-04106	77	08310-11123		53
01517-06356		64	02142-06106	39	03541-04126	78	08310-11123		53
01517-06506		2	02142-06106	40	03541-05123	75	08310-11123		59
01517-08123		15	02142-06106	75	03541-05123	75	08310-11123		59
01517-08166		110	02142-06108	92	03541-05126	77	08310-11123		60
01517-08203		34	02142-06108	93	03541-05163	75	08310-11123		60
01517-08203		38	02142-06108	104	04001-00000	57	08310-11126		54
01517-08256		9	02142-06123	12	04002-00000	48	08310-12086		28
01517-08303		25	02142-06123	70	04004-00000	63	08310-12086		63
01517-08306		35	02142-06123	74	04004-00000	66	08310-12086		101
01517-08353		15	02142-06125	47	04007-00000	101	08310-12103		5
01517-08353		25	02142-06125	75	04111-25186	67	08310-20066		62
01517-08356		8	02142-06125	87	04111-25206	63	08310-22066		61
01517-08356		61	02142-06125	87	04111-30256	59	08310-22066		64
01517-08406		35	02142-06125	106	04111-30256	60	08310-22066		64
01517-08653		25	02142-06126	47	04211A09109	6	08310-22086		110
01517-10203		13	02142-06164	75	04211A09109	17	08310-22106		46
01537-10603		25	02142-06165	73	04221-05109	8	08310T24106		64
01537-10703		25	02142-06165	74	04221-06129	6	08310T24126		64
01707-10303		5	02142-06165	74	06003-00000	110	08313A11066		98
01707-10306		104	02142-06165	101	06111-06003	23	08313A11066		101
01707-10403		68	03111-04255	107	06112-10004	27	08313A11066		101
02004-00000		95	03111-04255	110	06112-10004	33	08313A11085		101
02005-00000		44	03111-05105	84	06112-12004	26	08313A11085		106
02007-00000		44	03111-05126	44	06112-12004	33	08313B11063		82
02008-00000		45	03111-05126	45	08001-00000	75	08313B11063		110
02009-00000		61	03111-05128	46	08002-00000	20	08313B11083		98
02009-00000	**	62	03111-05203	73	08004-00000	12	08314-41123		59
02112-05103		73	03111-05303	75	08005-00000	20	08314-41123		60
02112-05105		58	03112-04169	43	08006-00000	12	08316-16103		25
02112-05106		57	03121-05165	41	08113-63040	23	08316-26066		93
02112-05126		100	03141-04085	49	08113-63050	23	08316-26066		96
02112-05356		42	03141-04085	93	08173-63060	31	08316-26086		75
02112-06086		92	03141-04086	46	08212-14202	26	08316-26106	**	62
02112-06086		92	03141-04086	49	08310-11056	40	08316A16046		90
02112-06123		68	03141-04126	46	08310-11056	42	08316A16063		8
02112-06123		82	03141-04165	75	08310-11063	4	08316A16063		12
02112-06123		96	03141-04166	46	08310-11063	14	08316A16063		12
02112-06124		12	03141-04168	75	08310-11063	18	08316A16063		18
02112-06125		70	03141-05106	12	08310-11063	18	08316A16063		77
02112-06125		82	03141-05125	33	08310-11063	95	08316A16068		78
02112-06125		82	03141-05126	45	08310-11066	47	08316A16083		36
02112-06126		61	03141-05128	95	08310-11066	61	08316A16083		37
02112-06126	**	62	03141-05165	41	08310-11066	72	08316A16083		38
02112-06128		92	03141-06108	104	08310-11066	72	08316A16086		58
02112-06163		82	03141-06122	69	08310-11066	** 62	08316A16086		61
02112-06163		82	03141-06123	15	08310-11066	** 62	08316A16086	**	62
02112-06163		96	03141-06123	33	08310-11083	9	08316B16066		47
02112-06163		97	03141-06125	74	08310-11083	14	08319A21066		100
02112-06165		72	03141-06125	74	08310-11083	16	08321-21063		20
02112-06165		74	03141-06126	44	08310-11083	22	08321-21064		12
02112-06166		97	03141-06126	45	08310-11083	36	08321-21086	**	62
02112-06303		98	03211-04106	46	08310-11083	37	08321-21208		59
02112-06405		72	03211-04126	45	08310-11083	38	08321-31003		60
02122-04168		90	03211-05163	73	08310-11083	59	08321A31046		100
02122-06106		7	03211-05163	73	08310-11083	60	08321A31056		42
02122-06148		17	03211-05166	58	08310-11086	35	08321A31056		100
02132-05105		72	03241-05106	76	08310-11086	44	08321A31063		4
02132-05105		73	03241-05108	76	08310-11086	58	08321A31063		18
02132-05205		91	03241-05125	74	08310-11086	61	08321A31063		18
02132-06168		93	03241-05125	106	08310-11103	34	08321A31063		68
02142-04106		100	03241-05165	70	08310-11103	50	08321A31063		82
02142-05065		88	03241-05165	74	08310-11103	51	08321A31063		82

I N D I C E N U M E R I C O

****

NUM. DE PIEZA	PAGIN	NUM. DE PIEZA	PAGIN	NUM. DE PIEZA	PAGIN	NUM. DE PIEZA	PAGIN
08321A31063	96	08321B31103	53	09100-10168	68	09148A03003	70
08321A31063	96	08321B31103	59	09100-12025	50	09148A05004	75
08321A31066	4	08321B31103	65	09100-12025	53	09148A05004	76
08321A31066	44	08321B31103	68	09100-12041	51	09148A05013	74
08321A31066	47	08321B31103	97	09100A06116	4	09148A05013	75
08321A31066	61	08321B31103	104	09100A12111	65	09148A05013	76
08321A31066	64	08321B31103	106	09103-06066	18	09148A05013	80
08321A31066	64	08322-11036	95	09103-06089	104	09148A05013	81
08321A31066	67	08322-11083	5	09103-08030	29	09148A06003	70
08321A31066	92	08322-11083	22	09103-08130	25	09148A35001	64
08321A31066	92	08322-11083	34	09103-08131	25	09148A50005	41
08321A31066	101	08322-11086	34	09103-08132	25	09148A50005	75
08321A31066	101	08322-11086	67	09103-08134	9	09150-06010	13
08321A31066	106	08322-11103	97	09103-10028	29	09159-04004	43
08321A31066 **	62	08322-11106 **	62	09103-10067	3	09159-07004	7
08321A31068	70	08322-21048	46	09103-10068	6	09159-08033	6
08321A31068	72	08322-21056	44	09103-12002	8	09159-20003	29
08321A31068	72	08322-21056	45	09103A08152	58	09159A04002	75
08321A31068	92	08322-21056	58	09103A10066	2	09159A08022	15
08321A31083	22	08322-21058	73	09103A12008	6	09159A08022	67
08321A31083	60	08322-21059	80	09107A08005	36	09159A10056	68
08321A31086	61	08322-21059	81	09107A08005	37	09159A12009	97
08321A31088	35	08322-21063	13	09107A08005	38	09159A12009	97
08321A31103	60	08322-21063	14	09108-06056	8	09159B04002	75
08321A31106	5	08322-21063	20	09111-08066	58	09160-05013	40
08321A31123	50	08322-21063	95	09111-12009	29	09160-06003	70
08321A31123	50	08322-21064	12	09115-06001	43	09160-06006	72
08321A31123	51	08322-21065	70	09119-10041	15	09160-06016	44
08321A31123	53	08322-21066	47	09119-12003	54	09160-06016	70
08321A31123	53	08322-21066	64	09119-12003	54	09160-06019	72
08321A31123	59	08322-21066	101	09119-12005	52	09160-06019	100
08321A31123	59	08322-21066	106	09119A06007	107	09160-06020	48
08321A31123	65	08322-21066	110	09119A06007	110	09160-06020	100
08321A31126	29	08322-21068	82	09124A35001	64	09160-06020	108
08321A31126	54	08322-21068	92	09125-06022	73	09160-06020	110
08321B31083	51	08322-21068	96	09125-06022	80	09160-06027	8
08321B31086	5	08322-21083	26	09125-06036	70	09160-06027	12
08321B31086	5	08322-21085	106	09125-06036	70	09160-06027	21
08321B31086	5	08322-21086	95	09125-06036	71	09160-06057	8
08321B31086	20	08322-21086	110	09125-06041	86	09160-06064	110
08321B31086	26	08322-21123	59	09125-06041	91	09160-06074	74
08321B31086	27	08322-21123	60	09125-06060	84	09160-06077	12
08321B31086	28	08322-21163	50	09125-06072	84	09160-08030	36
08321B31086	29	08322-21163	53	09125-08002	82	09160-08030	37
08321B31086	29	08323-31068	93	09125-08002	84	09160-08030	38
08321B31086	31	08323A31056	46	09125-08002	84	09160-08030	39
08321B31086	34	08331-31266	52	09125-08002	85	09160-08033	101
08321B31086	34	08331-41159	17	09125-08002	88	09160-08075	101
08321B31086	36	08331-41256	28	09125-08002	91	09160-08075	101
08321B31086	37	08332A11058	93	09125-08002	95	09160-08086	91
08321B31086	38	08332A11058	96	09125-08002	97	09160-10001	5
08321B31086	39	08332A11058	108	09125-08002	101	09160-10001	104
08321B31086	45	08332A11058	110	09125-08004 **	62	09160-10039	3
08321B31086	50	08332A11106	26	09126A08005	82	09160-10072	2
08321B31086	52	08332A11106	33	09126A08005	93	09160-10074	59
08321B31086	52	08332T11156	64	09126A08005	96	09160-10074	60
08321B31086	58	08341-31059	6	09128-06031	72	09160-10094	68
08321B31086	58	08351-21008	28	09128-06032	27	09160-10094	68
08321B31086	59	08351A21008	28	09128-06032	32	09160-12073	50
08321B31086	61	09100-06055	61	09128-10001	27	09160-12073	53
08321B31086	63	09100-06055	61	09129-06002	40	09160-18018	25
08321B31086	66	09100-06055 **	62	09129-06002	45	09160-18018	34
08321B31086	69	09100-06055 **	62	09132-05029	80	09160-20056	29
08321B31086	95	09100-06075	82	09132-05029	81	09160-35002	29
08321B31086	106	09100-08158	39	09132-06006	67	09160-35003	29
08321B31103	5	09100-08167	95	09135-08001	26	09160-35004	30
08321B31103	5	09100-08172	28	09135-08001	27	09160-35006	30
08321B31103	34	09100-08253	56	09140-12026	56	09160A06019	101
08321B31103	50	09100-10023	65	09148-05019	41	09160T08075	61
08321B31103	51	09100-10056 **	62	09148-05022	70	09161-04008	93

I N D I C E N U M E R I C O

****

NUM. DE PIEZA		PAGIN	NUM. DE PIEZA	PAGIN	NUM. DE PIEZA	PAGIN	NUM. DE PIEZA		PAGIN
09161-04008		96	09246-16010	55	09319-12023	53	09404A08405		16
09161-04011		98	09246A05001	9	09320-06006	73	09405A35402		34
09161-04011		99	09247-20001	55	09320-06006	97	09407A12402		63
09161-06008		80	09247A12101	104	09320-06006	108	09408-00012		40
09161-06008		93	09247A14027	4	09320-06011	72	09408-00060		21
09161-06008		96	09247A18003	25	09320-06011	97	09408-00090		16
09161-10009		64	09250-02001	73	09320-09004	101	09408A00083		16
09163A08002		82	09250-10006	26	09320-09034	12	09409-06309		87
09163A08002		96	09250-14003	46	09320A06014	97	09409-07306		19
09163T10001		64	09250-14003	73	09320B06014	97	09409-07306		84
09163T10001		67	09250-14003	93	09343-03020	21	09409-07310		85
09163T12001		64	09250-14006	82	09343-03020	21	09409-07310		88
09164-15006		29	09250-25007	79	09343-03021	21	09409-07311		70
09164A24003		27	09250-25007	83	09343-03021	21	09409-07311		80
09166-16014		24	09250-26005	25	09343-03029	21	09409-07311		81
09166-25009		23	09250-30002	79	09343-03036	21	09409-07312		71
09166-30007		23	09250-40002	79	09343-03036	21	09409-07312		88
09168-20002		55	09250-40002	80	09343-03049	21	09409-07312		88
09168A08015		25	09250-40002	81	09343-03049	21	09409-08305		91
09168A12005		104	09250-40002	95	09343-03079	21	09409-09303		81
09168A14012		4	09251-09002	61	09343-03087	11	09409-09303		81
09169-06057		12	09251-09002	62	09343-07086	19	09409-10301-5CW		75
09180-06106		8	09261-03015	26	09343-07104	19	09409-73012		84
09180-06106		21	09261-06003	24	09343A04036	16	09409A08303		89
09180-08007		58	09262-28005	23	09343A04047	16	09409A10303		89
09180-08095		15	09262-28006	23	09343A11016	104	09409A12301		82
09180-10018	**	62	09262-28015	23	09343B07069	16	09409B10303		89
09180-10097	**	62	09262-30072	23	09343C07044	16	09409B12301		82
09180-12035		50	09262A35007	54	09343C07108	16	09409B12301		89
09181-35012		29	09263-20056	23	09343D07108	16	09410-00067		102
09181-35013		29	09263-28021	23	09344-05040	104	09422-05011		24
09181-35014		29	09263-30016	23	09344-05042	104	09422-05012		24
09181-35015		29	09263-35015	23	09344-07012	19	09440-04019		27
09181-35016		29	09263-35015	23	09360-10026	64	09440-07005		27
09181-35017		29	09263-35015	24	09367-04002	21	09440-08026		13
09181-35018		29	09265-35002	29	09367-14003	9	09440-09019		26
09181-35019		29	09265-45002	29	09380-25011	23	09440-11005		27
09181-35020		29	09265A15002	52	09380-28007	23	09440-12004		55
09181-35021		29	09265A30003	29	09380-28007	23	09440-27007		72
09181-35022		29	09265A41001	52	09380-28007	23	09448-18016		26
09181-35023		29	09269A33001	22	09385-12001	67	09448-18017		26
09200-10010		63	09280-10005	4	09388-00017	23	09448-20006		22
09200A08039		67	09280-14009	4	09388-00019	23	09448-21003		61
09202-05027		8	09280-19001	32	09388-00019	23	09448-21003	**	62
09202A06004		6	09280-28008	20	09390-62010	23	09448-29004	**	62
09205-03019		22	09280-56004	1	09390-68002	23	09448-30010		61
09205-04001		33	09280-56004	2	09400A53301	104	09448-31029	**	62
09205-04003		33	09283-25077	23	09400A60301	104	09448-31030		61
09205-04003		33	09283-26016	52	09401-50402	33	09462-00040		98
09205-05012		26	09283-32022	7	09401A13404	9	09482-00155		2
09206-13001		2	09283-32026	6	09401A20402	20	09482-00167		2
09206-13001		25	09283-40013	29	09401B11402	16	09482A00155		2
09206-13011		25	09283-48007	54	09401B13404	9	09491-21021		10
09206-13011		25	09283-50002	52	09401B13404	9	09491-60008		10
09208A06001		108	09283-68001	6	09401B13404	20	09491-95009		10
09208A06001		110	09284-14003	22	09402-70207	12	09800A00180		71
09209-05016		82	09285-00002	52	09403-06403	110	09811A00182		71
09209-05016		93	09289-07005	7	09403-07312	64	09812A00007		71
09209-05016		96	09300-14012	22	09403-08309	16	09813A00006		71
09209-13007		13	09300-30003	23	09403-08313	72	09813A00009		71
09229A03011		84	09300-30003	24	09403-09309	71	09814A00001		71
09241-08003		27	09305-07003	104	09403A12310	13	09814A00007		71
09241-12004		2	09305-13002	50	09403A23401	104	09816A00074		71
09241-20002		2	09305-13006	53	09403A45301	16	09816A00083		71
09241-22003		22	09306-14004	61	09403A48401	12	09824A00017		71
09246-05003		3	09308-08001	72	09404A06402	9	09824A00022		71
09246-06001		3	09308-08007	43	09404A06402	46	11100-83814		1
09246-06002		3	09308-10004	8	09404A06415	13	11110-82602		2
09246-08002		3	09308-10004	21	09404A06415	25	11112-73001		2
09246-16009		55	09308-14006	46	09404A06415	45	11115-82000		2

I N D I C E N U M E R I C O

****

HOJA 05

NUM. DE PIEZA	PAGIN	NUM. DE PIEZA	PAGIN	NUM. DE PIEZA	PAGIN	NUM. DE PIEZA	PAGIN
11141-82611	1	12860A82600	7	13351-83010	11	16520-83002	4
11141-82611	2	12870A82600	7	13360-83010	11	16910-83000	4
11161-83000	2	12891-82001	7	13371-82100	10	16920-60A00	2
11170-83010	2	12911A82000	7	13372-82100	10	16930-82001	4
11180-78111	2	12915A82050	7	13373-82100	10	17110-83000	18
11189A82600	1	12921-82000	7	13374-82100	11	17120-83000	18
11189A82600	2	12931-82000	7	13375-82100	11	17400-83810	18
11191A73001	9	12932-82000	7	13381-82100	10	17431-82000	1
11192A83000	9	12933-73000	7	13700A83001	12	17431-82000	18
11193A80000	9	13110-83040	9	13700B83301	12	17511-82000	18
11200-82604	3	13119-82601	1	13712-83000	12	17521B82010	18
11241-82010	3	13119-82601	9	13731-83000	12	17550-83021	20
11311-83000	3	13125-83000	9	13740-83000	12	17561-73000	20
11320-83000	3	13125-83000-H17	9	13780A83000	12	17569-80000	1
11341-82000	6	13129-83000	9	13812-83001	12	17569A80000	20
11349-82000	1	13191-83000	9	13830-83001	12	17570A74001	20
11349-82000	6	13192-83000	9	13830A83001	12	17700D83001	19
11380-83000	8	13200-83010	10	13839-83000	9	17761A83000	19
11383-82000	8	13200-86810	11	13840-83000	12	17841-83000	20
11390-82010	8	13212-83010	10	13860-83000	12	17851-83000	20
11394-82000	8	13213-82100	10	13870-83000	12	17852-83000	20
11395-82000	8	13214-82100	10	13881A83001	12	17859-83001	20
11396-82000	8	13215-82100	10	13885-83000	12	17860A83000	20
11400-83816	1	13216-82100	10	13896-83000	12	17860A83010	20
11510-83003	4	13218-82100	10	14111-83003	14	17871A83010	20
11610A80010	5	13219-82040	10	14120-83003	14	17872-83010	20
11641-83000	5	13221-82100	10	14130-83002	14	17873A83000	20
11651-83000	5	13223-82100	10	14140-83000	1	17910A82000	36
11661-83000	5	13225-82100	10	14140-83000	14	17910A82000	37
11710A80000	5	13226-82100	10	14150A83002	15	17910A82000	38
11741-80010	5	13236-83000	10	14183-82601	15	17921A82010	36
11851-73000	9	13237-82100	10	14231-80010	15	17921A82010	37
12100-82810	6	13238-82100	10	14281-78010	15	17921A82010	38
12100-82810-025	6	13241-82100	10	14281-79010	15	17930-78100	19
12111-83000-025	6	13243-82100	11	14284-83002	15	17932-78100	19
12111-83000-050	6	13244-82100	10	14285-83001	15	18115-83000	21
12111-83000-0A0	6	13252-83000	10	14300A83011	15	18115-83010	10
12111-83000-0B0	6	13254-82100	10	14300A83411	15	18115-83010	21
12140-82050-025	6	13256-82100	10	14492-82600	15	18118-80010	9
12140-82050-050	6	13257-82100	10	14699-83000	15	18123-80400	21
12140-82051	6	13259-82100	10	15100A83000	16	18123-83000	21
12151A82000	6	13260-83000	10	15315-82000	16	18133-80400	11
12160-86001	6	13263-82100	10	15319-73001	1	184276	101
12221-82600	6	13269-82100	10	15319-73001	16	18550-82021	21
12300-82810-0AA	6	13272-83000	10	15410A63401	16	22100A83020	22
12300-82810-0BA	6	13282-82100	10	15810A80010	16	22400A83020	22
12300-82810-0DA	6	13282-82100	10	15810A80311	16	23260-83012	22
12300-82810-0EA	6	13282-82100	10	15819-78000	16	23266-83001	22
12340-82000-0A0	6	13282-82100	11	15821A83010	16	23710A83012	13
12340-82000-0B0	6	13291-82100	10	15830A83000	16	23710A83023	13
12340-82000-0CD	6	13296-82100	10	15840A83002	16	23911-83001	13
12340-82000-0D0	6	13297-82100	11	15861-83010	16	24110A83001	23
12340-82000-0E0	6	13310-82640	10	15861-83510	16	24121-83001	23
12351-82000	6	13319-82100	11	15881A83002	16	24131-83001	23
12610-82000	6	13320-83011	10	15910A83000	13	24210A83001	23
12620-83000	6	13321-82100	11	15910A83010	13	24220A83000	23
12623-60A00	6	13322-82100	11	15939-83000	13	24230A83000	23
12631-82000	6	13323-82100	11	15991-83000	13	24250A83000	23
12635-78400	6	13324-82100	10	16100-82821	17	24351-83000	23
12710-83000	7	13326-83000	11	16119-82000	1	24411-83000	23
12710-83010	7	13327-82100	11	16119-82000	17	24412-83000	23
12741-82010	8	13329-82100	11	16131-82600	17	24413-83001	23
12761A82000	8	13330-82100	10	16132-82600	17	24421-83004	23
12810-82002	8	13331-83000	11	16151-78100	17	24422-83003	23
12821-82001	8	13341-83001	11	16152-78100	17	24423-83003	23
12822-82001	8	13341-83010	11	16153-78100	17	24431-83001	23
12823-82001	8	13344-82300	11	16161-82600	17	24432-83001	23
12841-60A01	7	13345-82100	11	16171-78100	17	24436-83000	23
12841-82000	7	13346-83000	11	16173-78100	17	24551-83000	24
12848-82000	7	13350-83011	11	16510B83000	3	24560A83001	24

I N D I C E N U M E R I C O

****

NUM. DE PIEZA	PAGIN	NUM. DE PIEZA	PAGIN	NUM. DE PIEZA	PAGIN	NUM. DE PIEZA	PAGIN
24671-83000	24	29151-80050	31	33152-82010	39	35226-00000	48
24681-83000	24	29211-83050	31	33230-83020	39	35231-00000	49
24700-83000	25	29221-83050	31	33239-76410	39	35233-00000	45
24741-83001	25	29231-80050	31	33267-83010	39	35255-00000	46
24759A78130	16	29241-80050	31	33268-83010	39	35256-00000	46
24759A78130	34	29241-80050	31	33278-52010	39	35601A80032	43
24770-80420	25	29310-80050	33	33279-80020	39	35601C80032	43
24780-83010	25	29321-80052	33	33297-81060	39	35602A80032	43
24821-09000	25	29331-80050	33	33310-82110	39	35602C80032	43
25121-83001	27	29332-80051	33	33321-75110	39	35603A80012	44
25125A80001	27	29341-80701	33	33324-79610	39	35603B80012	44
25211-83002	26	29344-83010	33	33370-83011	39	35604A80012	44
25221-83001	26	29345-80051	33	33410-83010	39	35604B80012	44
25241-83001	26	29346-80002	33	33471-77011	39	35910B80011	44
25261-83002	26	29347-80001	33	33610A80021	40	36210A79003	46
25271-83002	26	29347A80001	33	33610B80021	40	36210B79003	46
25341-69002	27	29348-80050	33	33661A51020	40	36410-70A00	43
25342-69002	27	29411-83050	32	33700-83030	39	36412-78400	43
25411-80401	26	29421-80450	32	33710-83010	39	36430-70A00	43
25420-80401	26	29431-80050	32	33730-60A10	39	36570A79000	44
25451-80421	26	29510-80051	34	33740-60A10	39	36570C79000	44
27101-83001	28	29515-80050	34	33750-60A10	39	36580-80001	44
27102C83001	28	29525-80050	34	33760-60A10	39	36610A70A20	45
27103-83201	28	29527-80050	34	33800A70A00	40	36610A70A30	45
27103C83001	28	29527-80050	34	33850A70A00	40	36610J83040	45
27110-83001	29	29530-80050	34	33883-63200	39	36620A70A10	45
27110-83050	31	29535-80050	34	33883-83020	39	36620A74A10	45
27110-83050	32	29540-80050	34	34100A71A00	41	36620A83041	45
27110-83251	31	29610A83001	34	34100A71A50	41	36620B83041	45
27121-83001	28	29620-80700	34	34600A50A00	46	36620C80055	45
27131B83001	28	29630-80700	34	34810A80001	104	36740A80000	40
27140-83001	28	29650A83001	34	34810B80001	104	36820A61000	46
27153B83000	28	29911-80050	31	34825A67012	104	36820A80000	46
27180B83001	28	29941-80050	33	34850A82000	9	36820A80010	46
27180B83001	28	29945A80050	34	34910A80030	41	36821A80000	45
27183B83000	28	29946A80050	34	35001-00000	95	36822A80001	104
27200-83010	28	29947-83200	34	35008-00000	48	36850A79500	46
27200B83010	28	29951-80050	31	35009-00000	48	37070-00000	48
27200B83010	28	29951-80050	32	35010-00000	48	37100A73302	46
27300-83821	29	29951-83050	31	35011-00000	95	37100B73302	46
27315-83001	29	29955-80050	31	35012-00000	101	37280A50A00	46
27331-83000	29	29956A80050	31	35013-00000	95	37400A84420	46
27341-83000	29	29958A80050	25	35013-00000	101	37400B84420	46
27341-83100	29	29958A80050	34	35017-00000	49	37400C84420	46
27351-83000	29	29959-80050	31	35018-00000	49	37610A80042	25
27355-83000	29	29962-80050	31	35020-00000	95	37610B80042	25
27356A63000	29	29971-80050	31	35021-00000	49	37610C80042	34
27411-83000	29	29971-80051	32	35026-00000	25	37670C80000	46
27421-83000	29	29972-80050	31	35038-00000	101	37670D80000	46
27450-83000	29	29973-80050	32	35069-00000	95	37670E80000	46
27461-83000	29	29975-80050	31	35070-00000	95	37740A66010	46
27462-63202	29	29981-80050	31	35100B79000	42	37740A66010	61
28101A83010	27	29981-80050	31	35103-00000	49	37820A82000	3
28113-83010	27	29981-80050	31	35132-00000	46	37860A50A00	46
28135-80000	27	29982-80050	31	35133-00000	46	37870-80000	46
28136-83000	27	29983-80050	31	35151-00000	95	37940A79000	46
28137-83000	27	29984-80050	31	35152-00000	34	38101-70A00	47
28381B83000	102	29985-80050	31	35154-00000	45	38101-80031	47
29111-83050	31	29986-80050	31	35155-00000	45	38102-70A00	47
29117-80050	31	29992-80050	31	35156-00000	45	38102-80031	47
29118-80050	31	29992-80050	32	35157-00000	45	38255-80000	47
29119-80050	31	29995-80050	32	35158-00000	45	38271-71310	47
29121-83050	31	29995-80050	33	35159-00000	45	38272-71310	47
29131-80050	31	29996-80050	33	35160-00000	45	38274-78000	47
29136-80050	31	30003-00000	37	35163-00000	45	38310A80030	47
29141-80050	31	30005-00000	36	35174-00000	45	38340A63641	47
29143-80050	31	30006-00000	38	35191-00000	42	38400B80000	47
29147-80050	31	31100A83010	35	35197-00000	45	38400C80000	47
29148-80050	31	33100-83021	39	35222-00000	46	38400E80000	47
29149-80050	31	33151-80020	39	35223-00000	46	38400F80000	101

I N D I C E N U M E R I C O

NUM. DE PIEZA	PAGIN	NUM. DE PIEZA	PAGIN	NUM. DE PIEZA	PAGIN	NUM. DE PIEZA	PAGIN
38480-80000	47	45001-00000	9	49511-80100 **	62	51044-00000	107
38500A80100	45	45005-00000	63	49511-80110	61	51045-00000	107
38610B78303	46	45008-00000	67	49610-80100 **	62	51051-00000	107
38610D78303	46	45011-00000	67	49610-80110	61	51052-00000	107
39312A80000	45	45012-00000	67	49710A83001	62	51053-00000	107
39400A83000	46	45013-00000	67	49710A83010	61	51054-00000	107
40025-00000	53	45014-00000	67	49710B80110	61	51057-00000	107
40026-00000	50	45015-00000	67	49751-79001	61	51057-00000	109
40027-00000	50	45018-00000	67	49751-79001 **	62	51058-00000	107
40028-00000	50	45019-00000	67	49751-79001 **	62	51058-00000	109
40029-00000	50	45020-00000	67	49810-80100 **	62	51059-00000	107
40046-00000	67	45022-00000	67	49810-80110	61	51059-00000	109
41110-70A00	50	45023-00000	67	49821-80110	61	51060-00000	107
41116-83000	53	45025-00000	50	50024-00000	93	51060-00000	109
41117-70A00	50	45111-80001	52	50027-00000	79	51086-00000	110
41118-70A00	53	45151-80001	52	50027-00000	79	51100CB3170	63
41118A70A00	50	45610-63001	52	50044-00000	95	51132A82002	63
41230-70A00	50	45621-63000	52	50051-00000	108	51160-00000	91
41240-70A00	50	45622-63000	52	50051-00000	110	51161-00000	91
41310-70A10	53	45623-80000	52	50064-00000	100	51162-00000	105
41310-70A20	53	45624-63001	52	50065-00000	100	51163-00000	105
41331-62020	50	45625-63001	52	50066-00000	101	51164-00000	105
41411-83000	50	45626-63000	52	50067-00000	100	51168-00000	105
41411-83000	53	46480-83303	55	50069-00000	101	51169-00000	106
41411-83010	50	46510A70A00	55	50104-00000	94	51173-00000	105
41411-83020	50	46541-52002	55	50140-00000	68	51174-00000	105
41430-83000	53	46542-52000	55	50227-00000	82	51175-00000	105
41440-83000	53	48110A70A00	57	50323-00000	75	51176-00000	105
41461-79000	50	48110B70A00	57	50376-00000	70	51177-00000	106
41461A83300	53	48113A73030	57	50389-00000	100	51178-00000	107
41462-79000	50	48120A70A00	57	50391-00000	100	51179-00000	107
41462-79000	53	48120B70A00	57	50670-00000	97	51180-00000	107
41463-82000	50	48120C70A00	57	50685-00000	107	51182-00000	107
41463-82000	53	48120D70A00	57	50685-00000	110	51183-00000	107
41600B70A00	50	48200B80210	58	50686-00000	107	51183-00000	109
41681A58040	59	48220A80110	58	50686-00000	110	51185-00000	107
41681A58040	60	48251-52000	58	50747-00000	74	51186-00000	107
41700B70A00	53	48262-58000	58	50956-00000	102	51187-00000	107
42110-80010	50	48270-80000	58	50957-00000	102	51188-00000	109
42150A83000	53	48411C80350	58	50960-00000	102	51192-00000	91
42300-70A00	51	48411D80350	58	50961-00000	102	51194-00000	91
42400-83001	51	48421C80300	58	50974-00000	105	51196-00000	105
42412-70A00	51	48421D80300	58	50975-00000	105	51197-00000	105
42415-83000	51	48491-80000	58	50976-00000	105	51198-00000	105
43100-70A00	56	48600-80022	60	50977-00000	105	51202-00000	105
43110A70A00	56	48600-80060	59	50982-00000	105	51203-00000	106
43110B70A00	56	48633-67011	59	50983-00000	105	51207-00000	105
43110C70A00	56	48633-67040	60	50984-00000	105	51208-00000	105
43130A78030	56	48644-80010	60	50985-00000	105	51209-00000	105
43210A70A00	56	48671-80011	60	50992-00000	79	51210-00000	105
43210B70A00	56	48671-80060	59	50993-00000	79	51211-00000	106
43241-80001	52	48674-63240	60	50994-00000	106	51212-00000	107
43252-80000	56	48674-80060	59	50995-00000	106	51213-00000	107
43261-80000	56	48730B80010	59	50996-00000	106	51214-00000	107
43271-80000	56	48730B80010	60	50997-00000	106	51216-00000	107
43421-80001	52	48741-80000	60	51000-00000	105	51217-00000	107
43440-80002	52	48741-80060	59	51000B83170	63	51219-00000	107
43445-80002	52	48800A70A60	59	51001-00000	105	51220-00000	107
43461-80000	52	48810-60A00	60	51002-00000	105	51221-00000	107
43465-80000	52	48810A80000	59	51003-00000	105	51222-00000	109
43466-80000	52	48836-70A00	60	51010A83010	63	51227-00000	109
43471-80001	52	48837-70A00	60	51010A83110	63	51236-00000	109
43485-73000	54	48838-70A00	60	51033-00000	107	51237-00000	109
43511A80001	54	48843A70A00	59	51034-00000	107	51244-00000	109
43588-73000	54	48870-70A02	60	51035-00000	107	51245-00000	109
44101A83300	52	48870A80060	59	51036-00000	107	51250-00000	109
44102A83300	52	48900A70A01	60	51039-00000	107	51251-00000	109
44131-73001	54	48900A83301	59	51040-00000	107	51258-00000	109
44210-83300	54	49410-83000	62	51041-00000	107	51259-00000	109
44220-83300	54	49410-83011	61	51042-00000	107	51264-00000	109

I N D I C E N U M E R I C O

****

NUM. DE PIEZA	PAGIN	NUM. DE PIEZA	PAGIN	NUM. DE PIEZA	PAGIN	NUM. DE PIEZA	PAGIN
51265-00000	109	53001B83040	66	61820-83010	79	64532-80100	86
51272-00000	109	53002A70A00	66	62111A83090	80	64541-80122	86
51273-00000	109	54100B83310	67	62111A83210	81	64550-74A20	83
51278-00000	109	54112-82010	67	62112A80000	80	64550-83000	83
51279-00000	109	54161-83300	67	62113-80000	80	64550-83000	86
51286-00000	109	54640A70A00	67	62114C83000	80	64553-80300	85
51287-00000	109	54640A70A10	67	62120A83020	80	64600-83001	83
51292-00000	109	54660A83310	67	62140A83290	81	64600-83100	86
51293-00000	109	54681A83600	67	62150-83290	81	64600-83300	83
51300-00000	109	54683-83300	67	62160-83210	81	64617-80130	88
51301-00000	109	55100A80010	65	62180-83211	81	64630-80002	84
51306-00000	109	55211-80000	65	62211-80002	80	64635-80001	83
51307-00000	109	55221-80000	65	62211-80002	81	64640-83002	83
51314-00000	109	55311-80000	65	62311-80002	80	64640-83002	88
51315-00000	109	57000A70A10	68	62311-80002	81	64710-80001	83
51348-00000	109	57000A70A60	68	62500-70A30	80	64710-80100	86
51349-00000	109	57000A74A50	68	62500-80310	81	64751-80101	87
51356-00000	109	57211-80000	68	62630-83551	84	65110-83600	87
51357-00000	109	57270-83011	68	63110-80000	83	65111-80103	87
51360A70A10	64	57270-83021	68	63110-80000	86	65120-80101	87
51362-00000	109	57280-80020	68	63121-80100	86	65120-83101	87
51363-00000	109	57310-83000	68	63131-80150	86	65130-80100	87
51370-00000	109	57320-83000	68	63210A80430	86	65134-80100	87
51371-00000	109	57321-52001	68	63230-80041	83	65135-80100	87
51410C80060	64	57461-80001	68	63230-80320	83	65141-80110	87
51410C83100	64	57471-80001	68	63231-80152	86	65241-80101	87
51420A70A00	64	57551-83000	68	63233-80001	86	65710-80301	84
51430A70A00	64	57680-83001	68	63310-80001	83	65730A80012	84
51439-00000	86	57710-83301	68	63310A80150	86	65750-80301	84
51440-00000	86	57720-83301	68	63310A80491	83	65770-83011	84
51460A80420	64	58100-70A02	70	63461-70400	40	65775-80010	84
51470A70A00	64	58200-83002	70	63510-80000	83	65780-83011	84
51480A70A00	64	58300-83001	72	63510-80000	86	65785-80010	84
51500A80320	64	58300-83100	72	63521-80100	86	65951-80000	71
51509-00000	103	58370-83000	72	63531-80140	86	65952-80000	71
51512-00000	102	58381A80000	72	63610-80430	86	65953-83000	71
51513-00000	102	58382A80000	72	63630-80041	83	65954-83000	71
51514-00000	103	58410-80010	72	63630-80320	83	67627-70000	79
51516-00000	103	58600A70A30	70	63631-80152	86	67627-70000	80
51520C83010	64	58622-83002	70	63710-80001	83	67700-80060	82
51540C80150	64	58723-83001	70	63710-80111	86	67790-80031	82
51565-00000	110	58726-83001	70	64110-80030	83	68001-80123	91
51566-00000	110	58763-83000	70	64110-80180	86	68002-80123	91
51567-00000	110	58771-80001	70	64116-80001	84	69100-83511	95
51568-00000	110	58800A70A30	70	64120-80011	84	69275-78200	88
51570A70A30	64	58822-83002	70	64131-80100	86	69310-80110	91
51570B70A30	64	58923-83001	70	64132-80100	86	69320-80110	91
51571-00000	102	58971-80001	70	64141-80122	86	69340-80110	91
51574-00000	102	59101-80030	73	64150-74A20	83	69350-80110	91
51576-00000	102	59300-80142	79	64150-83000	83	69510-80110	95
51580B80130	64	59300-83001	79	64150-83000	86	69520-80110	95
51581-00000	102	59600-83131	79	64153-80300	85	71411-83000	68
51583-00000	102	59600A83010	79	64200-70A00	83	71420-83000	68
51588-00000	75	61100A83022	79	64200-71A00	86	71430-83000	68
51590-00000	93	61100A83080	79	64200-74A00	83	71441-83002	68
51590-00000	96	61100A83081	79	64216-80140	86	71472-80030	69
51594-00000	93	61400A83040	79	64217-80130	88	71473-80030	69
51600-00000	97	61490-80001	83	64230-80002	84	71481-80030	68
51601-00000	97	61490-80001	86	64230-83550	84	71491-80000	68
51603-00000	97	61490-80302	83	64235-80001	83	71492-80010	68
51640A80000	64	61492-80000	84	64240-83002	83	71493-83000	68
51640B80000	64	61492-80000	86	64240-83002	88	71494-80001	68
51665-00000	97	61500-83010	79	64310-80100	86	71494-80201	68
51712A83000	64	61550-80001	79	64311-80001	83	71610-83000	68
51755-67000	64	61590-80001	83	64351-80101	87	71620-83000	68
51950A83120	64	61590-80001	86	64510-80030	83	71631-83000	68
51951B83400	64	61590-80302	83	64510-80180	86	71632-83000	68
51951D83400	64	61600-83011	79	64516-80001	84	71710-83301-162	70
53001A70A00	66	61600A70A00	79	64520-80011	84	71741-83301	70
53001B83040	54	61811-83000	79	64531-80100	86	71742-83301	70

I N D I C E N U M E R I C O

NUM. DE PIEZA	PAGIN	NUM. DE PIEZA	PAGIN	NUM. DE PIEZA	PAGIN	NUM. DE PIEZA	PAGIN
71810-83301	80	73811A70A00	74	75540A83031	102	77141-83022R	71
71810-83301	81	73812-70A01	74	75540B80052	102	77141-83022R	83
71821-80300	80	73812A70A01	74	75540C83002	102	77141-83022R	88
71821-80300	81	73813-83010	74	75610B83020	75	77151-82000	69
71822-80300	80	73813A83010	74	75610C83000	75	77311-80000	84
71822-80300	81	73815-70A00	74	76110-83000	89	77313-80000	84
71823-83301	80	73821A70A01	74	76110-83020	89	77313-80001	84
71824-83300	80	73821A70A11	74	76110A71A00	89	77461-78000	93
71825-83300	80	73823-70A10-281	75	76110A71A10	89	77461-78000	96
71831A83301	80	73824-83000	75	76110A83020	89	77461-80080	82
71831A83310	81	73825-70A00	74	76110B71A00	89	77471-80000	69
71832A83301	80	73831-70A01-5ES	74	76110B71A10	89	77511-80160	89
71832A83310	81	73833-70A00-281	75	76110B83020	89	77512-80160	89
71833-70A10	80	73841A70A00	75	76110C71A10	89	77513-80160	89
71833-70A10	81	73842-70A00	75	76110C83020	89	77514-80160	89
72111A70A00A	70	73843-70A01	75	76110D71A10	89	77515-80160	89
72111A70A00B	70	73850-70A00	75	76110E71A10	89	77516-80160	89
72111A70A00M	70	73850A70A00	75	76110F71A10	89	77591-75000	94
72111A70A00N	70	73910A80000	75	76120-83000	89	77611-83010	84
72111A70A00P	70	74100-70A01	78	76120-83020	89	77611-83020	84
72111A70A00R	70	74100A70A20	78	76120A71A00	89	77611-83020	88
72115-70A00	70	74172-80000	78	76120A71A10	89	77611A83030	84
72310-70A00	74	74250A83021	77	76120A83020	89	77613-83021	84
72310A70A20	74	74259-83000	77	76120B71A00	89	77613-83021	84
72321-80001	74	74400-70A00	78	76120B71A10	89	77613-83021	88
72411-70A00	70	74400A70A00	78	76120B83020	89	77613-83021	88
72411-80000	73	74417-70A00-281	78	76120C71A10	89	77614-83021	84
72412-80000	73	74512-83020	78	76120C83020	89	77614-83021	84
72413-80003	73	74513-70A20	78	76120D71A10	89	77614-83021	88
72414-80000	73	74514A83000	78	76120E71A10	89	77614-83021	88
72415-80000	73	74611-70A00	77	76120F71A10	89	77640A70A00	90
72416-83000	73	74612-70A00	77	76140B83000	82	77640A74A00	90
72418-80003	73	74614-83000	77	76140C83000	82	77640B70A00	90
72419-83010	73	74615-70A00	77	76182-58002	91	77640B74A00	90
72420-80010	73	74710-83020	20	76182-63101	91	77640C70A00	90
72430-80002	74	74812-83001	20	76411-80000	75	77640C74A00	90
72441-80001	71	75110B83050	102	76421-80001	98	77640D70A00	90
72442-83002	72	75110C83050	102	77131-83022A	71	77640D74A00	90
72450A80000	73	75115-80000	103	77131-83022A	83	77640E70A00	90
72462-83000	73	75115A80000	103	77131-83022A	88	77640F70A00	90
72511A78000	40	75115B80000	103	77131-83022B	71	77650A70A00	90
72521-80000	40	75116-80000	103	77131-83022B	83	77650A74A00	90
72525-80001	40	75120B83030	102	77131-83022B	88	77650B70A00	90
72810B80022	97	75120C83030	102	77131-83022M	71	77650B74A00	90
72850-80002	82	75150B83040	102	77131-83022M	83	77650C70A00	90
72875-80001	82	75150C83040	102	77131-83022M	88	77650C74A00	90
72876-80000	80	75170A83771	102	77131-83022N	71	77650D70A00	90
72876-80000	81	75170D83680	102	77131-83022N	83	77650D74A00	90
73111A70A01	74	75170E83680	102	77131-83022N	88	77650E70A00	90
73111A70A11	74	75170F83680	103	77131-83022P	71	77650F70A00	90
73111B70A11	74	75170G83680	103	77131-83022P	83	77716-79000	93
73210A70A00	77	75190-83010	103	77131-83022P	88	77716-79000	96
73220-70A00	77	75211-83010	102	77131-83022R	71	77810-60021	82
73230-70A00	77	75211A83010	102	77131-83022R	83	77811A83060	74
73310-83353	99	75211B83010	102	77131-83022R	88	77811C83000	70
73411A70A00	75	75221-83010	102	77141-83022A	71	77813A80010	82
73411B70A00	75	75221A83010	102	77141-83022A	83	77813B80010	82
73451A70A00	75	75221B83010	102	77141-83022A	88	77813C80010	82
73451A70A10	75	75231-80000	102	77141-83022B	71	77813D80010	82
73610-83022	77	75240A83002	102	77141-83022B	83	77830-70A00A	71
73613A83000	77	75240A83011	102	77141-83022B	88	77830-70A00B	71
73641-83001	77	75250-83001	102	77141-83022M	71	77830-70A00M	71
73642-83001	77	75260-83001	102	77141-83022M	83	77830-70A00N	71
73650-83001	77	75411-83000	69	77141-83022M	88	77830-70A00P	71
73660-83001	77	75431A80300	69	77141-83022N	71	77830-70A00R	71
73671-83000	77	75530B80052	102	77141-83022N	83	77840-70A00A	71
73722-63001	80	75530D83002	102	77141-83022N	88	77840-70A00B	71
73722-63001	81	75530E83002	103	77141-83022P	71	77840-70A00M	71
73810-83030	74	75530F83002	103	77141-83022P	83	77840-70A00N	71
73811-70A00	74	75531A83031	102	77141-83022P	88	77840-70A00P	71

I N D I C E N U M E R I C O

NUM. DE PIEZA	PAGIN	NUM. DE PIEZA	PAGIN	NUM. DE PIEZA	PAGIN	NUM. DE PIEZA	PAGIN
77840-70A00R	71	78361-00000	101	82270A80100	96	84701A83010	72
77841-80001	82	78362-00000	101	82280A80100	82	84702A83010	72
77841A80001	70	78364-00000	101	82280A80100	91	84703-80000	73
77891-63100	82	78366-00000	101	82291-80100	93	84781-80000	73
77891-63100	96	78367-00000	100	82292-80100	93	84801-83030	73
78100-79000	96	78368-00000	100	82530-80100	96	84802-80011	73
78111-80101	87	78369-00000	100	82550-80081	82	84901A83010	106
78111-83601-4KW	87	78372-00000	95	82581-80100	96	84901E80133	106
78121-83002-4GF	87	78411-80101	98	82591-80060	82	84904A80132	108
78131-83100	87	78411-80101	99	82592-80060	82	84904A80132	110
78132-83101	87	78415-83000	98	82610-85000	93	84924-80130	106
78133-83100	87	78445-80001	99	82681-80100	93	85001-72A10	105
78141-80102	87	78463-78000	92	82810A80102	93	85001A72A10	105
78141-83101	87	78470-80001	98	82810A80102	96	85002-70A10	105
78142A80100	73	78470-80341	99	82820A80102	93	85002A70A10	105
78142A80100	87	78471A79000	93	82891A80100	93	85210-83001	106
78199-79000	96	78471B79000	93	82891A80100	96	85221-82001	106
78211-83600	87	78472A78000	92	82960A82100	92	85291-80290	106
78221-83601	87	78472B78000	92	82960B82100	92	85391-80290	106
78230-83601	87	78476-80001	98	83110A80100	93	85410A79202	104
78241A60002	93	78476-80001	98	83110B80100	93	85410B79202	104
78241B60002	93	78476-80001	99	83130A80100	93	85451-75100	104
78242B61000	93	78481-80000	98	83130B80100	93	85710-80290	106
78242C61000	93	78481-80340	99	83211-80100	93	85721-82001	106
78248	107	78481A79000	93	83212-80100	93	85772-80100	95
78248	110	78481B79000	93	83231-80100	96	85890-83000	106
78251-68200	96	78482-30301	99	83241-80100	93	86169-79000	73
78251-68201	82	78482-80301	98	83242-80100	93	86211-79000	86
78261-68200	96	78483-80301	99	83410-80100	92	86370-58140	90
78261-68201	82	78484-80300	99	83440-80100	92	86401-70A00	106
78271A58053	91	78485-80000	98	83661A80101	92	86401A70A00	106
78271B58053	91	78488-80000	98	83710-70A00	91	86601B80132	106
78301-00000	100	78490-83000	98	83710A70A00	91	86602B80132	106
78301A83200	98	78491-80010	98	83720-70A00	91	86701-83030	106
78303-00000	100	78491-80011	99	83720A70A00	91	86731-83000	106
78304-00000	100	78491-83000	98	83771-80100	95	86732-83030	106
78305-00000	100	78510-80300	99	83811-80100	92	86736-83000	106
78306-00000	100	78600-80340	85	83850-80100	92	86736-83000	106
78307-00000	100	78611A80000	84	83911-80100	92	86901-83030	106
78308-00000	100	78621-80001	84	83912-80100	96	87001B83300	107
78309-00000	100	78651A80000	84	83914-73062	110	87001B83300	110
78310-00000	100	78661-80001	84	83944-73062	110	87001F83300	107
78310-83210	98	78681-80301	84	83960A83501	97	87001F83300	110
78310-83343	99	78710-78000	92	84410-70A00	75	87002B83300	107
78310A83353	99	78811A78400	92	84410A70A00	75	87002B83300	110
78313-00000	100	78861-78400	92	84422-70A00	75	87110D83300	110
78315-00000	100	78991-78000	92	84511-80132	73	87212-80200	110
78318-00000	100	79100-63860	98	84531-80112	92	87214-83000	110
78320-00000	101	79133-63041	98	84536-80112	92	87271A80121	108
78321-80001	98	79133-63041	99	84561-80112	88	87301P80650	107
78323-00000	101	79134-73002	98	84571-80132	95	87325-83000	110
78324-00000	100	79134-73002	99	84611A80100	73	87328-83000	110
78325-00000	100	81111-83000	88	84621A80101	88	87612-80200	110
78328-00000	100	81411-80100	88	84623A80100	95	89101A80022	104
78329-00000	100	81430-80102	88	84630-80000	91	89191A80002	47
78330-00000	100	81451-80101	88	84640-80020	84	89210A80011	83
78333-00000	100	81730-80101	92	84640-80030	84	89210A80011	86
78335-00000	100	81740-80101	92	84641-80020	84	89241A80000	104
78336-00000	100	81811A80100	91	84641-80121	91	89281-80000	104
78338-00000	100	81860A80100	95	84642-80120	91	89311A80000	104
78339-00000	100	81860B80100	95	84644A80001	73	89311A80300	104
78341-00000	101	82110-80013	72	84645A80101	91	89312-83030	104
78343-00000	100	82160A80010	72	84645C80101	73	89320A83000	104
78344-00000	100	82171-80100	72	84646-80000	84	89810A70A00	76
78350-00000	100	82191A80002	72	84648-80011	73	BODY VE-SAM	79
78355-00000	101	82191A80002	78	84649-80011	73	CS-2006KIT	100
78357-00000	101	82201-80101	93	84651-80121	91	CS2096-KIT	100
78358-00000	101	82202-80101	93	84652-80120	91	WC105004	49
78359-00000	101	82270A80100	91	84681A80001	82		
78360-00000	101	82270A80100	93	84681A80100	95		

I N D I C E N U M E R I C O

NUM. DE PIEZA		PAGIN	NUM. DE PIEZA	PAGIN	NUM. DE PIEZA	PAGIN	NUM. DE PIEZA	PAGIN
87325-83000		138						
87328-83000		136						
87328-83000		138						
87380A83300		132						
87580A83300		132						
87580A83300		135						
87580A83340		137						
87612-80200		136						
87612-80200		138						
88119-83000		90						
88140-80070	**	90						
88153-80070		90						
88196-79000		90						
89101A80022		116						
89210A80011		99						
89210A80012		97						
89241A80000		116						
89281-80000		116						
89311-80000		116						
89312-83010		116						
89320-80000		116						
89810A83000		88						
93632A80000		82						
ACC-0033		82						
CH-2001		73						
CS-2006-KIT		112						
CS-2008	***	103						
CS-2092		111						
CS-2093		111						
J3BODE25		94						
V3BODE25		94						
WC-105004		58						

I N D I C E N U M E R I C O

****

NUM. DE PIEZA	PAGIN	NUM. DE PIEZA	PAGIN	NUM. DE PIEZA	PAGIN	NUM. DE PIEZA	PAGIN
82810A80102	109	84801A83030	86	85391-80290	123	86701A83001	119
82820A80102	107	84802A80011	86	85391-80290	125	86728A80100	118
82891A80100	107	84901A83010	120	85391-80290	127	86728A80100	119
82891A80100	109	84901A83010	123	85391-80290	129	86731-83000	121
82960-82100	106	84901A83010	126	85410A79202	116	86731-83000	123
83110-80100	107	84901A83010	128	85410B79202	116	86731-83000	125
83130-80100	107	84901A83010	130	85451-75100	116	86731-83000	128
83211-80100	107	84901B80133	120	85680-83100	127	86731-83000	129
83212-80100	107	84901B80133	124	85680A80590	117	86732-83030	121
83231-80100	109	84901B80133	126	85680A80610	117	86732-83030	123
83241-80100	107	84901B80133	128	85680A83000	121	86732-83030	125
83242-80100	107	84901B80133	130	85710-80290	121	86732-83030	128
83410A80100	106	84901E80133	120	85710-80290	123	86732-83030	129
83440A80100	106	84901E80133	123	85710-80290	125	86736-83000	121
83661A80101	106	84901E80133	126	85710-80290	127	86736-83000	123
83710-80111	104	84901E80133	128	85710-80290	129	86736-83000	125
83710A80101	104	84901E80133	130	85710-83001	121	86736-83000	128
83720-80111	104	84904A80132	135	85710-83001	123	86736-83000	129
83720A80101	104	84904A80132	137	85710-83001	125	86901-83030	121
83771-80100	108	84924-80130	120	85710-83001	127	86901-83030	123
83772-80100	108	84924-80130	123	85710-83001	129	86901-83030	125
83811-80100	106	84924-80130	126	85721-82001	121	86901-83030	128
83850-80100	106	84924-80130	128	85721-82001	123	86901-83030	129
83911-80100	106	84924-80130	130	85721-82001	125	86913E79233	98
83912-80100	109	85001A83110	117	85721-82001	127	86913F76233	98
83914-73061	136	85002A83110	117	85721-82001	129	86913G79233	98
83914-73061	138	85101-83100	127	85880-83100	127	86913H79233	98
83944-73062	136	85101A83000	121	85880A83000	121	86916B79233	98
83944-73062	138	85102-83100	127	85880A83010	117	87001A80650	131
83960B80150	110	85102A80590	117	85880A83110	117	87001A83300	132
84410-83000	88	85102A80610	117	85887-80030	118	87001A83305	132
84422-83000	88	85102A83000	121	85887-80030	119	87001B83300	132
84431-83000	88	85180-83100	127	85890-83000	121	87001B83300	133
84511-80132	86	85180A83000	121	85890-83000	123	87001B83300	134
84511-80171	86	85210-80290	121	85890-83000	125	87001B83300	135
84531-80112	106	85210-80290	123	85890-83000	127	87001B83300	137
84531-80131	106	85210-80290	125	85890-83000	129	87001F83300	132
84536-80112	106	85210-80290	127	86103A73020	86	87001F83300	133
84536-80131	106	85210-80290	129	86123A63010	86	87001F83300	134
84561-80112	102	85210-83001	121	86124A63010	86	87001F83300	135
84561-80131	102	85210-83001	123	86169-78400	86	87001F83300	137
84571-80132	108	85210-83001	125	86211-79000	99	87002A83300	132
84611A80100	86	85210-83001	127	86370-58140	88	87002A83305	132
84621A80101	102	85210-83001	129	86401-83000	121	87002B83300	132
84623A80100	108	85221-82001	121	86401-83000	123	87002B83300	133
84630-80000	104	85221-82001	123	86401-83000	125	87002B83300	134
84640-80020	98	85221-82001	125	86401-83000	127	87002B83300	135
84640-80030	98	85221-82001	127	86401-83000	129	87002B83300	137
84641-80020	98	85221-82001	129	86401A80291	118	87101A83300	132
84641-80121	104	85291-80290	121	86601B80132	118	87102A83300	132
84642-80120	105	85291-80290	123	86601B80132	119	87110D83300	136
4644A80001	86	85291-80290	125	86601B80132	121	87110D83300	138
4645A80101	104	85291-80290	127	86601B80132	123	87180A83300	132
4645C80101	86	85291-80290	129	86601B80132	126	87180A83300	135
4648-80011	86	85301-83201	127	86601B80132	128	87180A83340	137
49-80011	86	85301A83010	117	86601B80132	130	87212-80200	136
91	104	85301A83110	117	86602B80132	118	87212-80200	138
	105	85301A83171	121	86602B80132	119	87214-83000	136
	96	85301B83171	121	86602B80132	121	87214-83000	138
	98	85302-83300	127	86602B80132	123	87271A80121	131
	95	85302A83010	117	86602B80132	126	87271A80121	132
		85302A83110	117	86602B80132	128	87271A80121	133
		85302A83220	121	86602B80132	130	87271A80121	134
		2B83220	121	86646-80000	98	87301A83300	132
		3110	117	86701-83030	121	87301P80650	131
		0 **	119	86701-83030	123	87301P80650	132
			119	86701-83030	125	87301P80650	133
			127	86701-83030	128	87301P80650	134
			121	86701-83030	129	87302A83300	132
			21	86701A83001	118	87325-83000	136